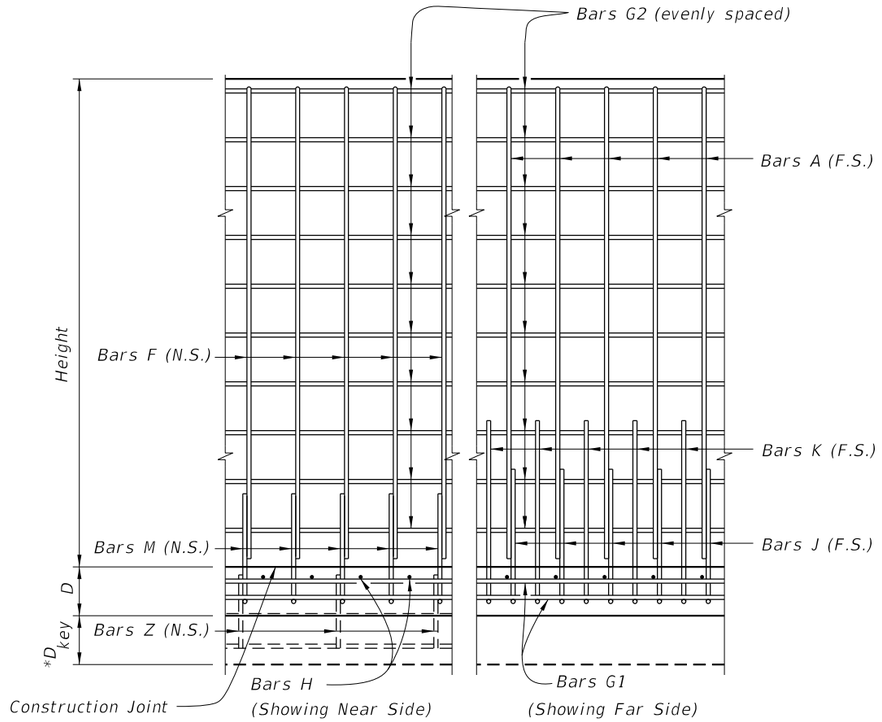

VIEW A-A

(Shear key shown dashed)

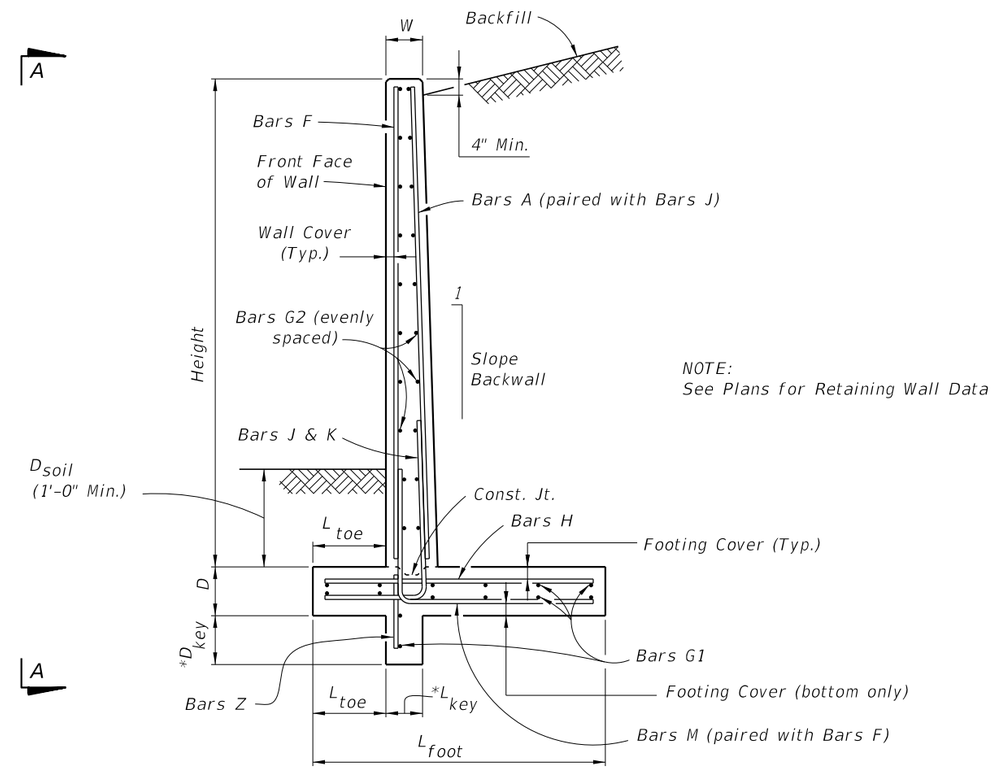

* Shear Key is required only when specified in the Plans.

TYPICAL SECTION

NOTES

TRAFFIC RAILINGS OR PARAPETS:
If there is a Traffic Railing or Parapet on the wall, align Wall Joints with V-Grooves, and Wall Expansion Joints with Barrier Open Joints.

FOUNDATION:
Prepare the soil below the footing in accordance with the requirements for spread footings in Specification Section 455.

REINFORCING BENDING DIAGRAMS

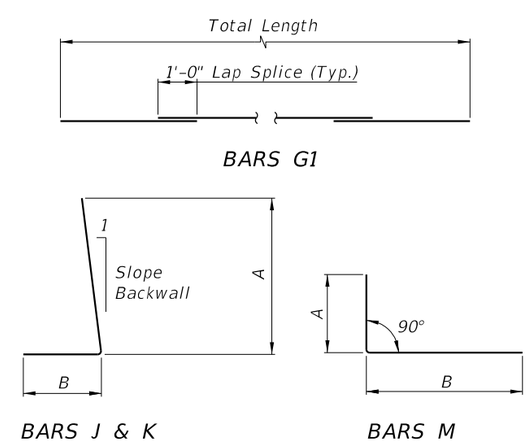

NOTE:
All bar dimensions are out-to-out

**Wall joint spacing 25 ft. maximum and 5' minimum. At minimum, every fourth wall joint to be an expansion joint. See Plans for actual wall joint spacing and expansion joint location.

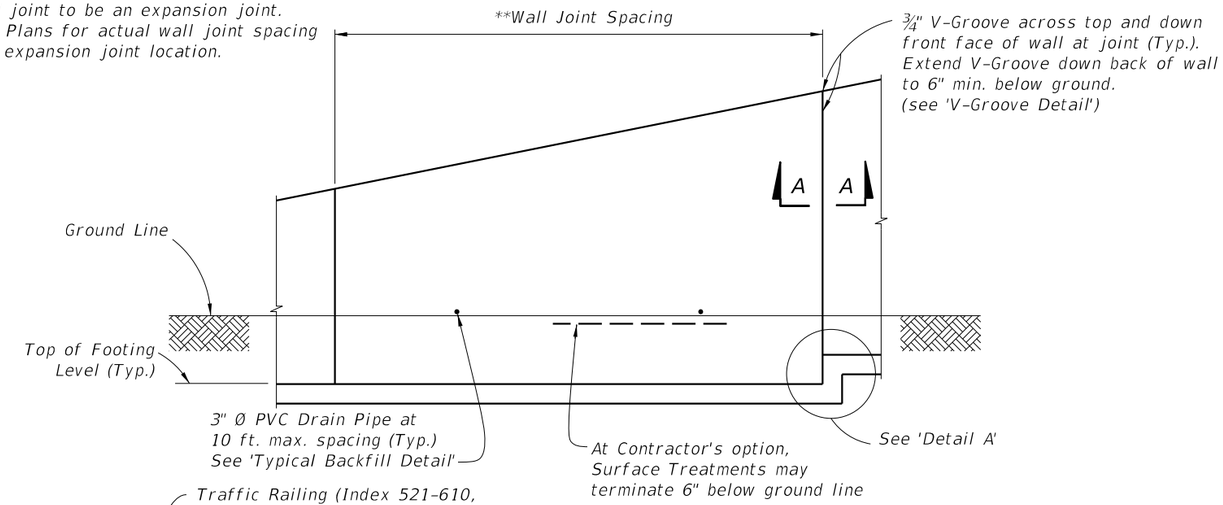

FRONT ELEVATION

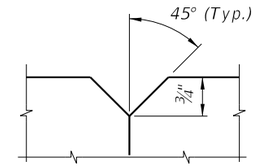

V-GROOVE DETAIL

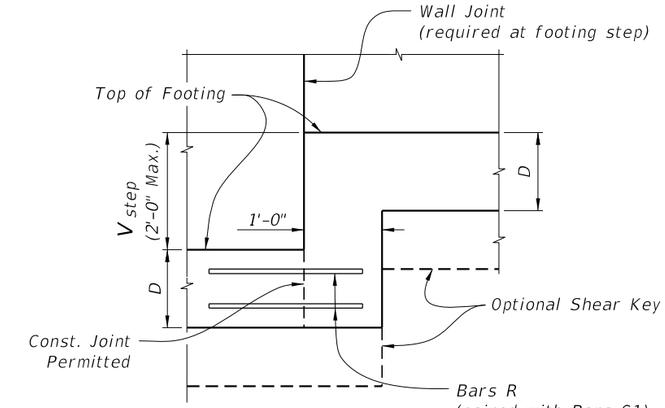

DETAIL A

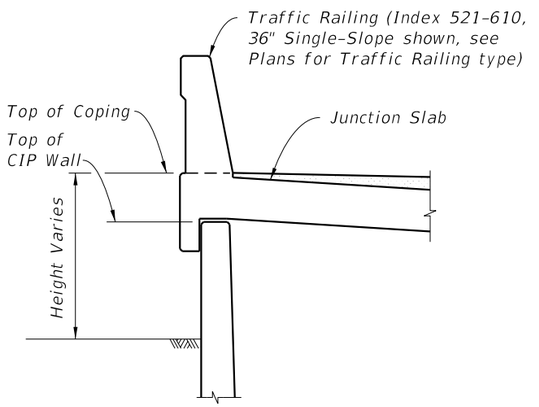

TRAFFIC RAILING/JUNCTION SLAB DETAIL

(36" Single-Slope shown, other Traffic Railings similar)

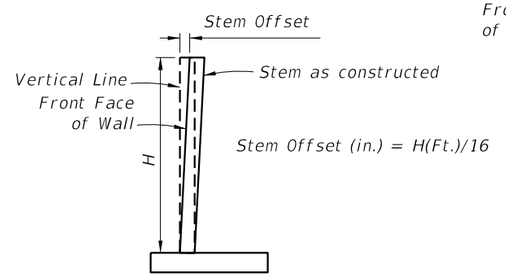

STEM OFFSET VALUES

(for H < 20 Ft.)

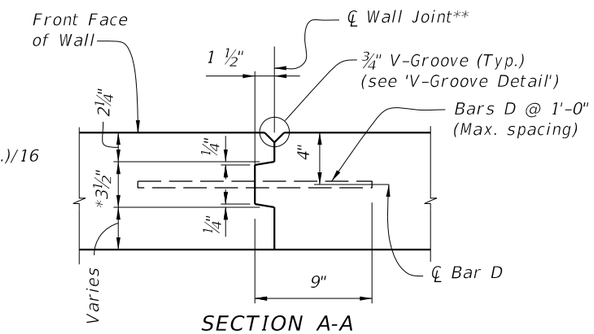

SECTION A-A
WALL JOINT DETAIL

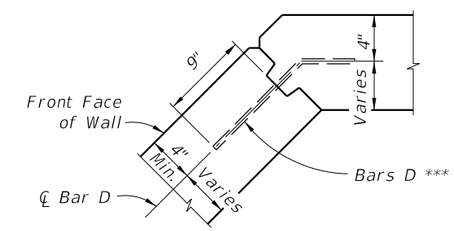

TYPICAL CORNER JOINT DETAIL

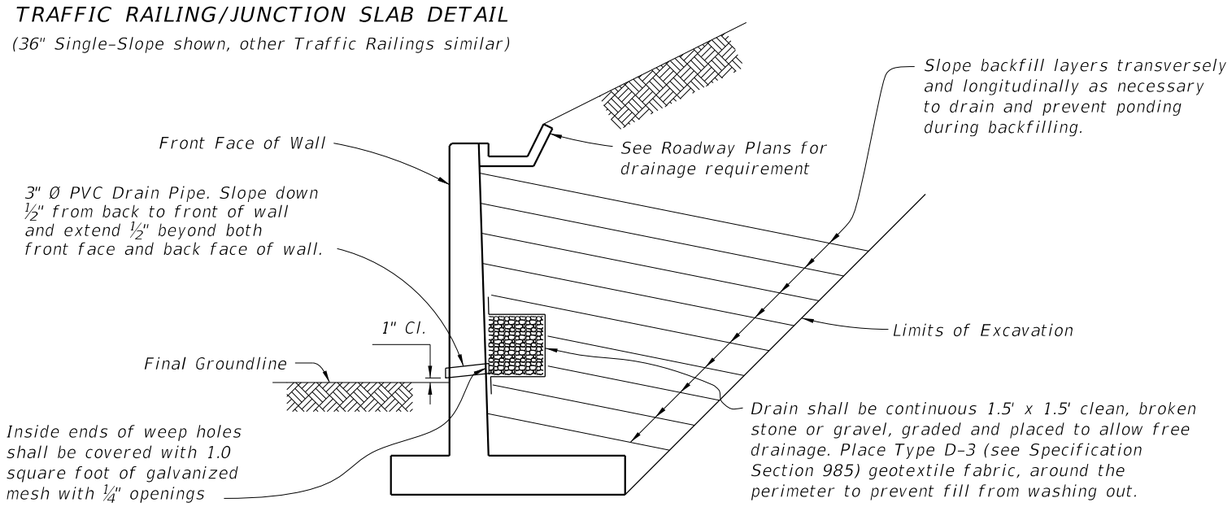

TYPICAL BACKFILL DETAIL

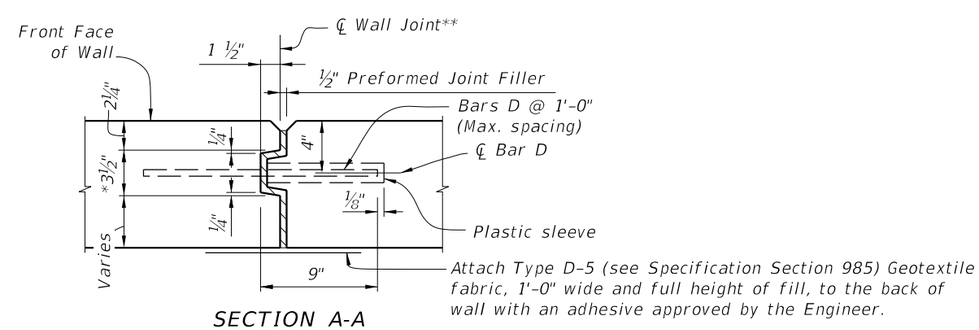

SECTION A-A
EXPANSION JOINT DETAIL

* Key to stop at top of footing and 6" from top of wall. Joint across footing and top of wall to be a straight line.

** Stay-In-Place Plastic Preformed Bond Beakers are permitted to form joints.

*** Bars D: Where a bend is required to maintain clearances, submit bend angle to GFRP supplier; steel reinforcing may be field bent.

9/21/2021 1:45:42 PM

LAST REVISION	REVISION	DESCRIPTION:			INDEX	SHEET
11/01/20			FY 2022-23 STANDARD PLANS	CANTILEVER RETAINING WALL (C-I-P)	400-010	2 of 2

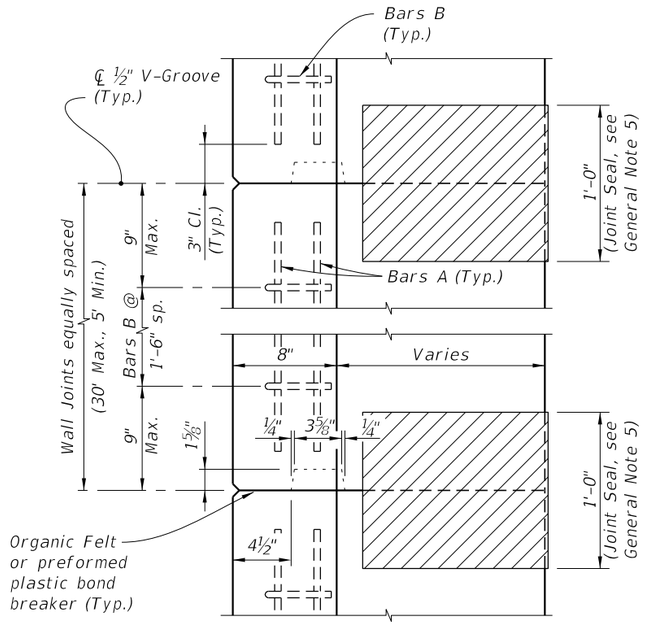

KEYWAY & WALL JOINT DETAIL
(TOP VIEW)

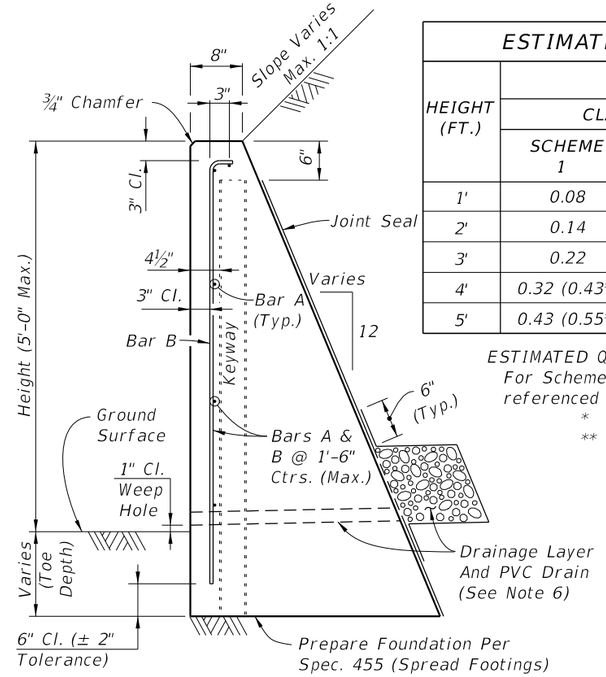

TYPICAL SECTION
C-I-P CONCRETE GRAVITY WALL

ESTIMATED QUANTITIES FOR C-I-P WALL

HEIGHT (FT.)	PER LINEAR FOOT OF WALL				WEEP HOLES & DRAIN REQD.
	CLASS NS CONCRETE (CY)			REINF. STEEL (LB.)	
	SCHEME 1	SCHEME 2	SCHEME 3 **		
1'	0.08	0.11 (0.20*)	0.03	3 (4*)	No
2'	0.14	0.20 (0.32*)	0.09	4 (5*)	No
3'	0.22	0.32 (0.47*)	0.29	5 (6*)	Yes
4'	0.32 (0.43*)	0.47 (0.65*)	0.43	6 (7*)	Yes
5'	0.43 (0.55*)	0.65 (0.85*)	0.60	7 (8*)	Yes

ESTIMATED QUANTITIES NOTES:
For Scheme 3 Junction Slab and Traffic Railing see the referenced Index for estimated quantities.
* Quantity for 2'-0" Toe Depth.
** Quantity for Scheme 3 assumes 1'-3" thick coping above Gravity Wall.

GENERAL NOTES

1. C-I-P Gravity Walls constructed as extensions of reinforced concrete retaining walls, except walls of proprietary designs, shall have the same face texture and finish as the reinforced concrete retaining wall.
2. Concrete for Gravity Wall shall be Class NS per Section 347. Concrete for Scheme 3 Junction Slab and Traffic Railing shall be Class II per Section 346, unless otherwise specified in the plans.
3. Reinforcing steel shall meet the requirements of Specification Section 931 (Grade 40 or 60). Smooth or Deformed Welded Wire Reinforcement (WWR) may be substituted on an equal area basis. Do not increase bar/wire spacing for Grade 60 reinforcing steel or WWR.
4. When required, for adjunct guiderail, see Index 515-070 or 515-080 as appropriate. For adjunct Type B fence see Index 550-002.
5. Joint Seal: Organic Felt bond breaker in accordance with Specification Section 400 or Type D-5 geotextile fabric in accordance with Specification Section 985. Mop all contact surfaces of concrete and Organic Felt or geotextile fabric with cut-back asphalt. Stop Organic Felt or geotextile fabric 6" below top of wall.
6. Provide a continuous 1'x1' clean gravel or crushed rock drain for wall heights 3 ft. and higher. Wrap drainage layer as shown, with Type D-3 geotextile fabric in accordance with Specification Section 985. Provide 8"x8" galvanized mesh with ¼" openings, at the inside end of the PVC Drain Pipe. Provide 2" Ø PVC Drain Pipe (Sch. 40) at 10 ft. max. spacing (when Drainage Layer is required). Locate outermost edge of Drain Pipe a minimum of 2'-0" from wall joints.
7. Cost of reinforcing steel, face texture, finish, joint seal, drain pipes, drainage layer, galvanized mesh and geotextile fabric to be included in the Contract Unit Price for Concrete Class NS, Gravity Wall. Cost of concrete for Junction Slab in Scheme 3, to be included in Contract Unit Price for Concrete Traffic Railing Barrier With Junction Slab. Adjunct railings or fences to be paid for separately.

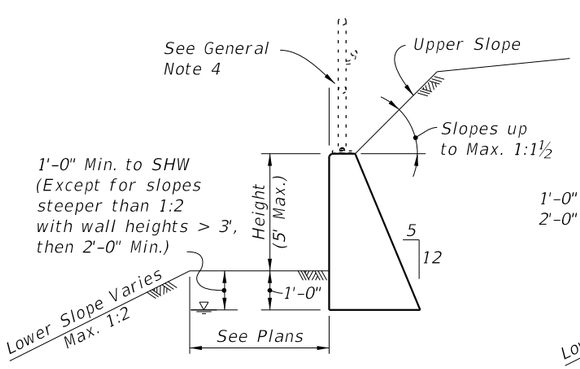

SCHEME 1
(No Traffic Loading Effects &
Upper Slopes ≤ 1:1½)

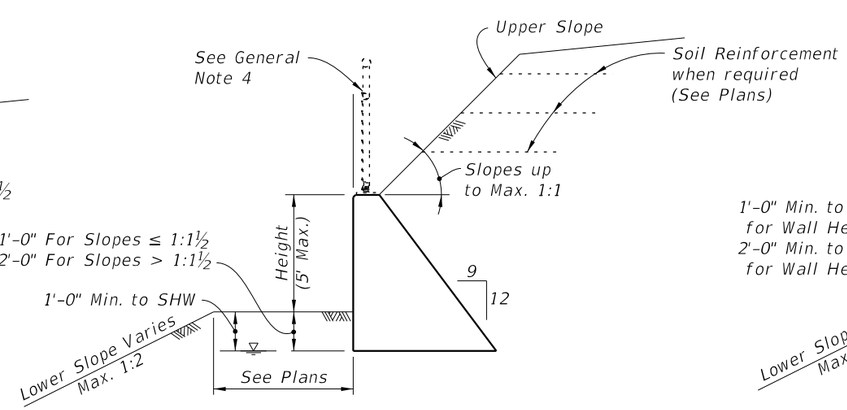

SCHEME 2
(With Traffic Loading or
Upper Slopes > 1:1½)

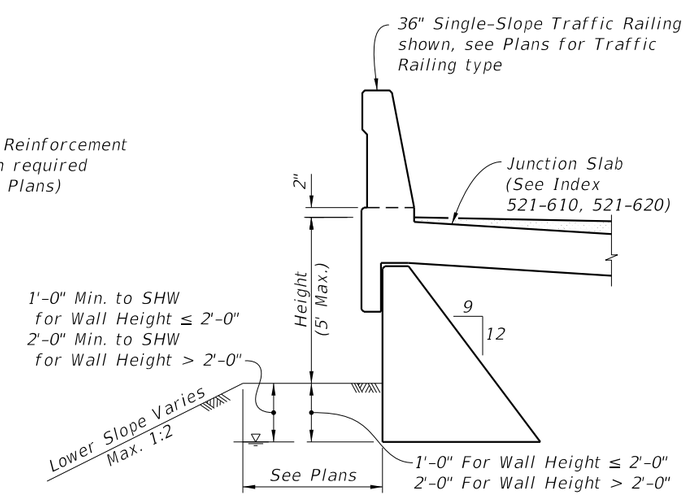

SCHEME 3
(With Traffic Railing)

BILL OF REINFORCING STEEL

MARK	SIZE	LENGTH
A	4	As Reqd.
B	4	As Reqd.

BAR BENDING DIAGRAM

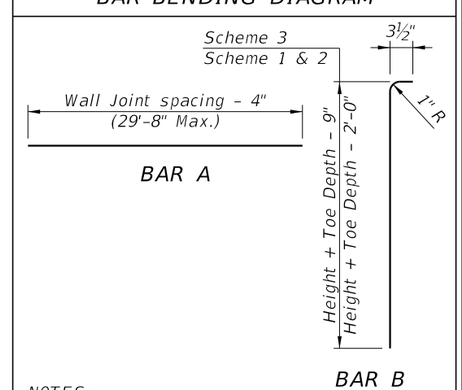

NOTES:
1. All bar dimensions are out to out.
2. Lap splices for Bars A must be a minimum of 1'-10".

9/21/2021 1:45:43 PM

LAST REVISION	REVISION	DESCRIPTION:			INDEX	SHEET
11/01/17			FY 2022-23 STANDARD PLANS	GRAVITY WALL	400-011	1 of 1

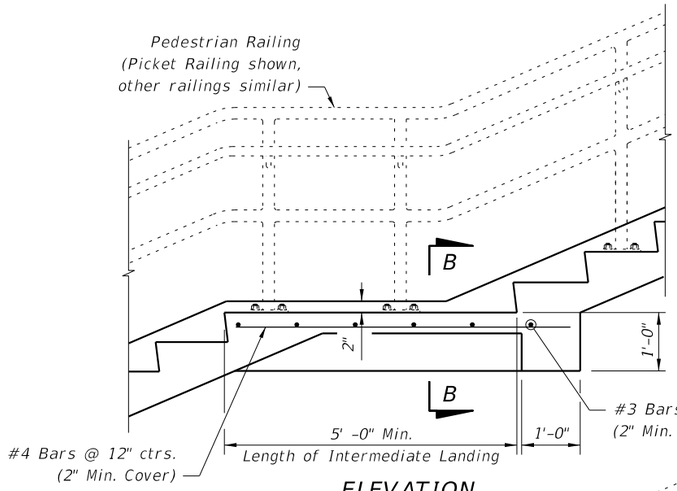

ELEVATION

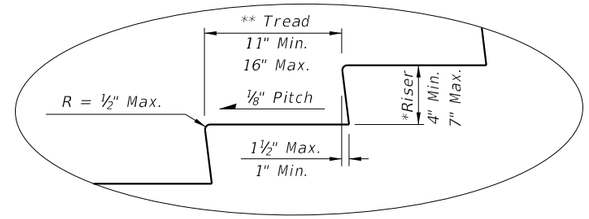

STAIR TREAD AND RISER DETAILS

* The greatest riser height within the flight of steps shall not exceed the smallest by more than ⅜".

** The greatest tread depth within the flight of steps shall not exceed the smallest by more than ⅜".

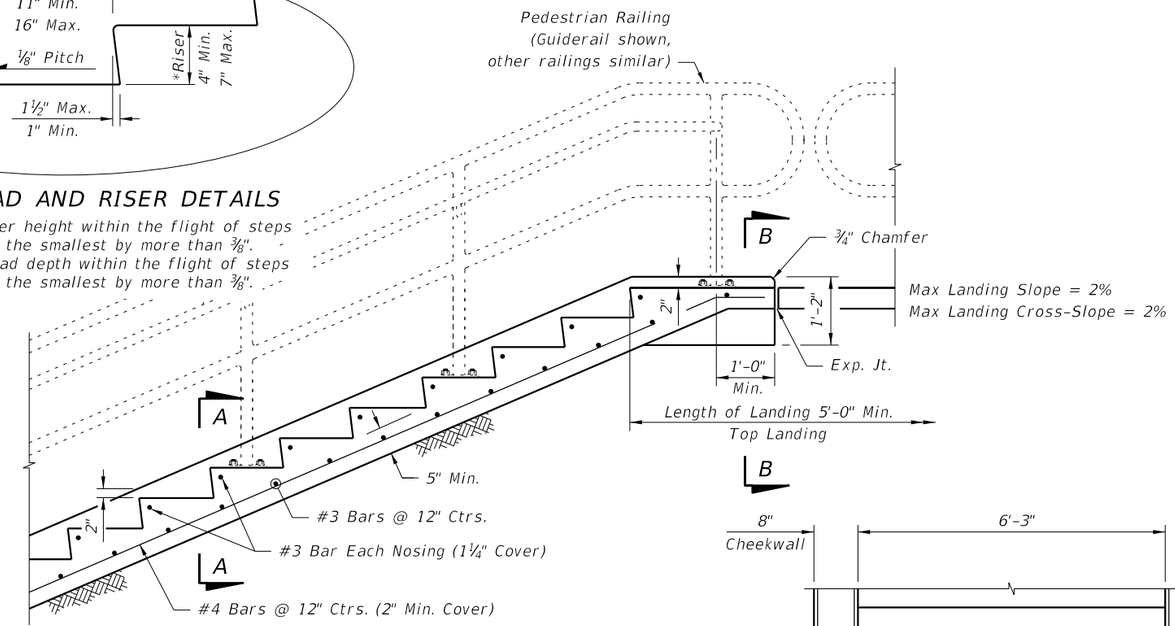

NOTE: Provide a maximum of 12 risers between landings.

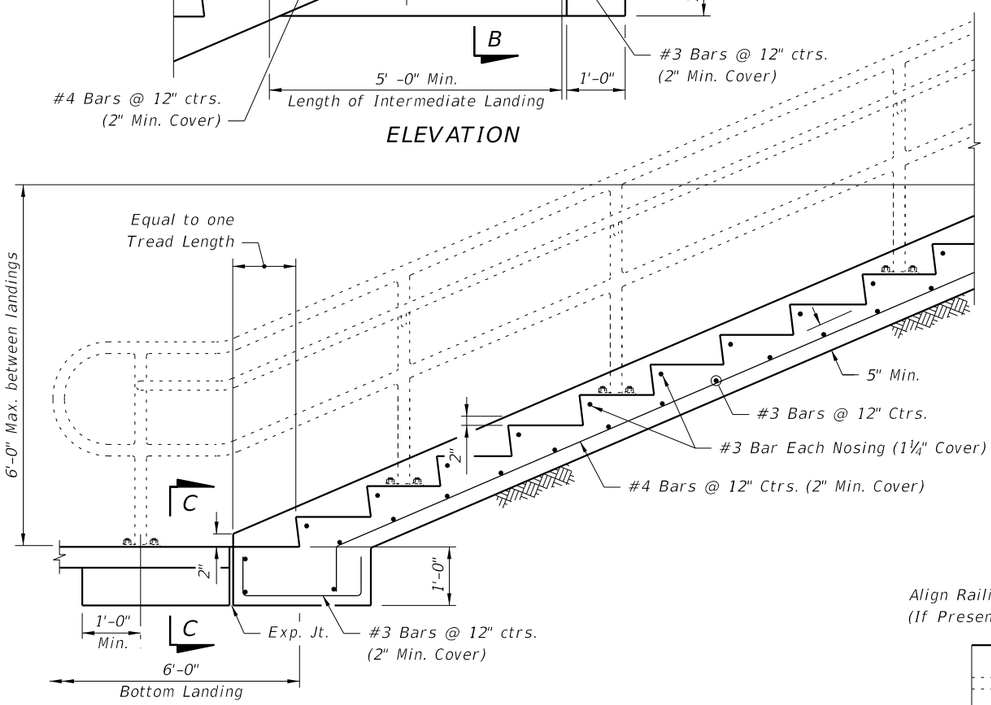

Max Landing Slope = 2%
Max Landing Cross-Slope = 2%

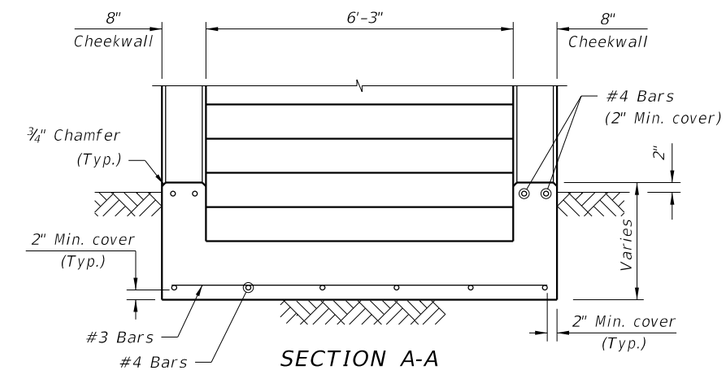

SECTION A-A

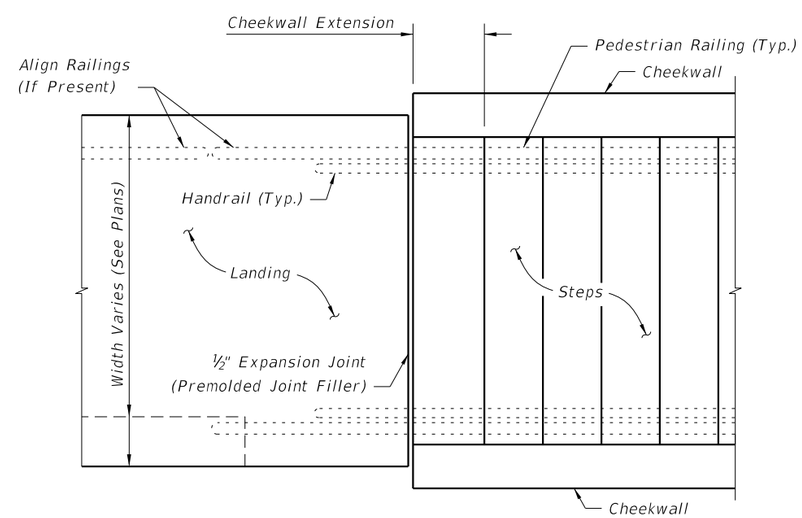

PLAN AT JUNCTION OF STEPS & LANDING
(Bottom Landing shown, Top Landing similar)

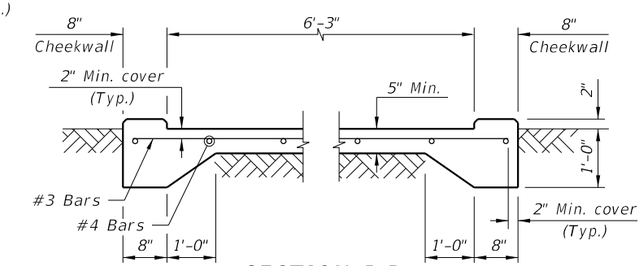

SECTION B-B

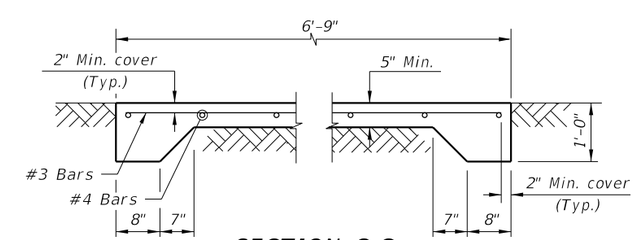

SECTION C-C

NOTES:

1. Do not use this Index for suspended (structural) steps or stairways.
2. Construct steps in accordance with Specification 522.
3. Concrete: Class NS, Specification 347.
4. Tread Finish: Broom finish parallel to steps unless otherwise shown in Plans.
5. Pedestrian Railing: See Indexes 515-052, 515-062, 515-070, 515-080 or Project Specific Design.
6. Cost of concrete steps, landings and cheekwalls shall be paid for under the contract unit price for Class NS Concrete (Concrete Steps), CY. Cost of reinforcing steel shall be paid for under the contract unit price for Reinforcing Steel (Miscellaneous), LB.

9/21/2021 1:45:44 PM

LAST REVISION	REVISION	DESCRIPTION:			INDEX	SHEET
11/01/17			FY 2022-23 STANDARD PLANS	CONCRETE STEPS	400-021	1 of 1

GENERAL NOTES:

1. Use a 1-piece cover, unless the 2-piece cover is called for in the Plans, except at inlets and manholes with sump bottoms. Use the 2-piece cover when the sump depth exceeds 2', unless otherwise noted.
2. Include "Adjustable" on the cover for Type I manhole adjustable frames.
3. For square or rectangular precast drainage structures, use either deformed or smooth WWR meeting the requirements of Specification 931. WWR must be continuous around the box and lapped in accordance with Option 1 or 3 as shown in the Wall Reinforcing Splice Details.
4. Lap splice horizontal steel in the walls of rectangular structures in accordance with Option 1, 2 or 3 as shown in the Wall Reinforcing Splice Details.
5. Welding of splices and laps is permitted. Use AASHTO M259 requirements and restrictions on welds.
6. Rebar straight end embedment of peripheral reinforcement may be used in lieu of ACI standard hooks for top and bottom slabs, except when hooks are specifically called for in the Plans.
7. Precast opening for pipe must be the pipe OD plus 6" (± 2" tolerance). Use mortar to seal the pipe into the opening of such a mix that shrinkage will not cause leakage into or out of the structure. Dry-pack mortar may be used to seal openings less than 2½" wide.

TABLE OF CONTENTS:

Sheet	Description
1	General Notes, Contents, Manhole Top Overview, and Manhole Covers
2	Manhole Frames and Manhole Tops
3	Inlet Locking Grates, Subgrade and Base Temporary Drains, and Pipe to Structure Filter Fabric Wrap
4	Drainage Structure Invert, Sump Bottom, Wall Reinforcing Splice Details, and Typical Slab to Wall Details
5	Precast Option and Equivalent Reinforcement substitution
6	Construction Joints and Minimum Box Riser Segment Dimensions
7	Skewed Pipe in Rectangular Structures
8	Miscellaneous Pipe Connection Details

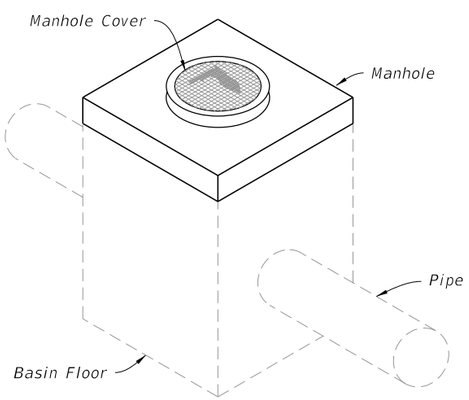

TYPE 7

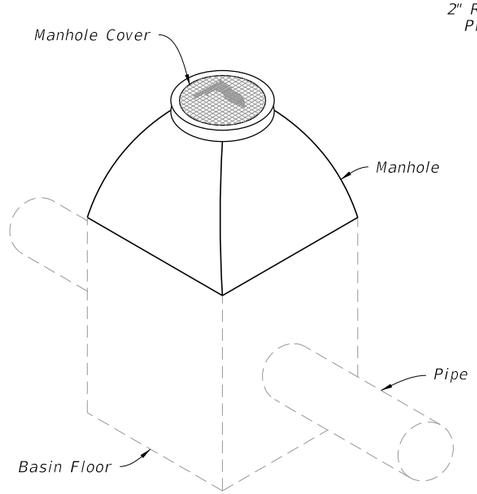

TYPE 8

MANHOLE TOPS

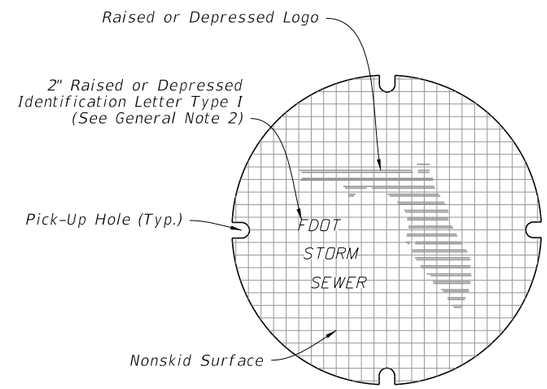

PLAN

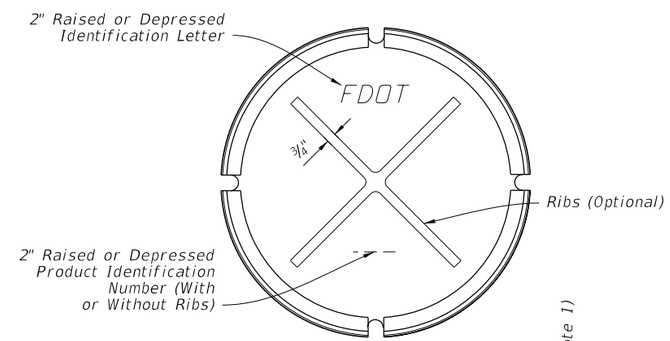

BOTTOM

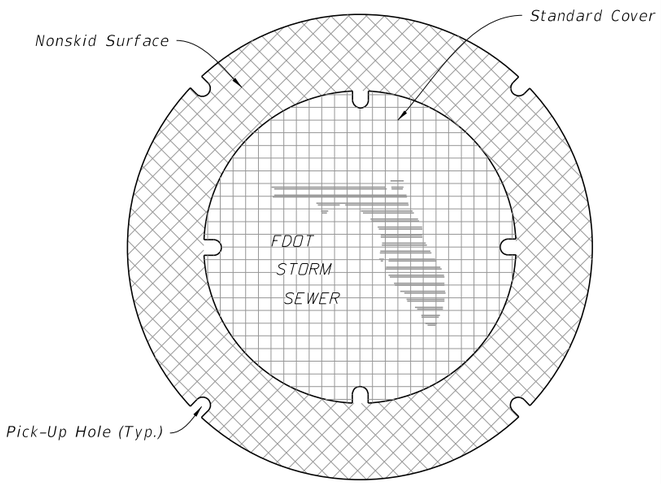

PLAN

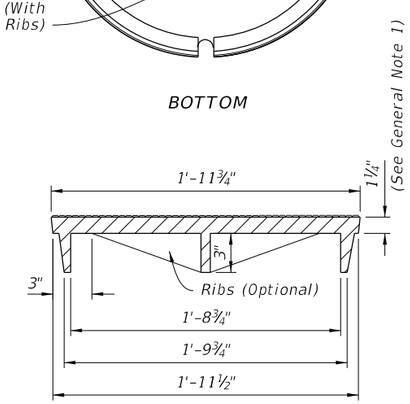

ELEVATION

1-PIECE COVER

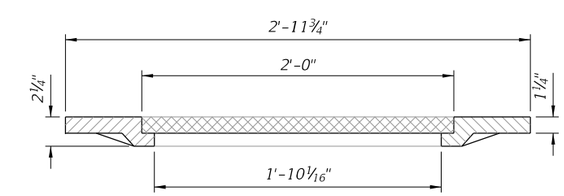

ELEVATION

2-PIECE COVER

MANHOLE COVERS

9/21/2021 1:45:45 PM

LAST REVISION	REVISION	DESCRIPTION:			INDEX	SHEET
11/01/20			FDOT FY 2022-23 STANDARD PLANS	SUPPLEMENTARY DETAILS FOR DRAINAGE STRUCTURES	425-001	1 of 8

TABLE 1 WEIGHT OF CASTINGS (lb)						
Frame Type	2'-0" OPENING		3'-0" OPENING			
	Frame	Cover (Std.)	Frame	2-Piece Cover		
				Inside	Outside	Total
I	155	190	220	190	220	410
II	145	190	255	190	220	410
III	90	190	180	190	220	410

NOTE:
Frame Type I in Table 1, includes Adjustable frames.

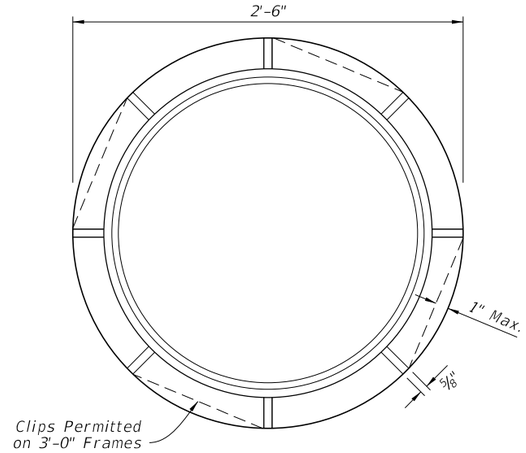

TYPE I
(For Manholes)

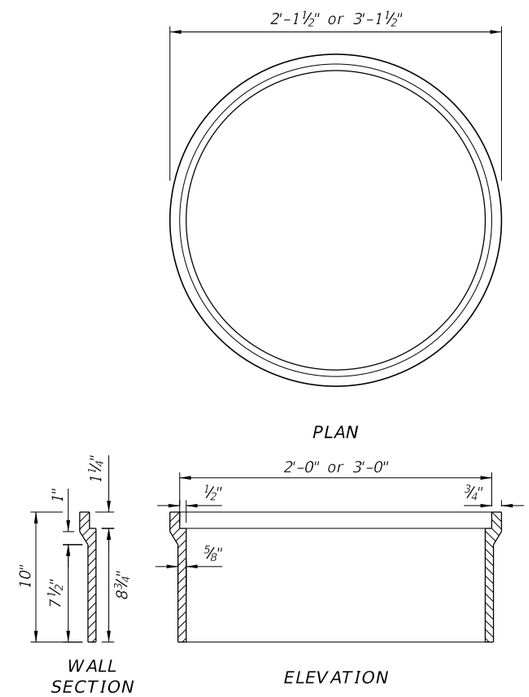

TYPE II
(For Curb Inlets Types 1, 2, 3, & 4)

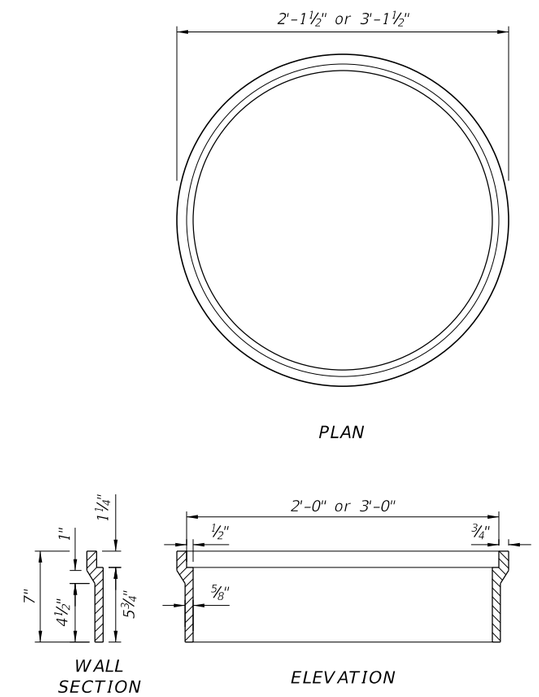

TYPE III
(For Curb Inlets Types 7 & 8)

MANHOLE FRAMES

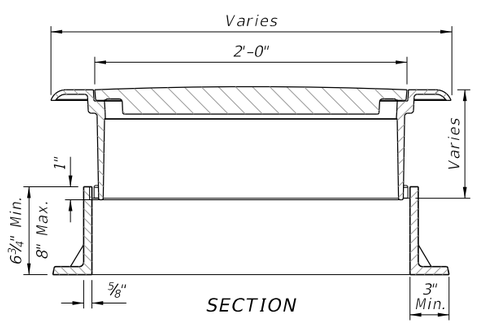

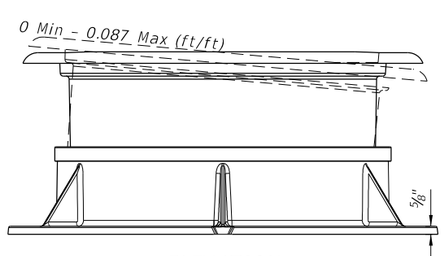

TYPE I ADJUSTABLE FRAME

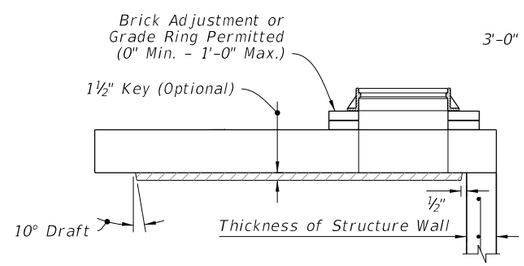

TYPE 7

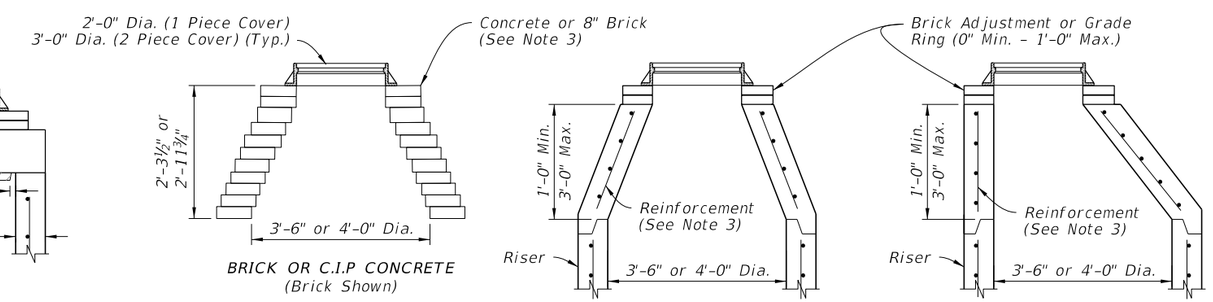

TYPE 8

NOTES:

1. Use Class II concrete for Manhole top Type 7 slabs.
2. Manhole top Type 7 slabs may be of cast-in-place or precast construction. The optional key is for precast tops and in lieu of dowels. Omit frame and slab openings when top is used over a junction box.
3. Manhole top Type 8 may be of cast-in-place, precast concrete construction, or brick construction. For concrete construction, use the same concrete and steel reinforcement as the supporting wall unit. An eccentric cone may be used.
4. Use construction joint options, as shown on Sheet 6 to secure manhole tops to structures.
5. Frames may be adjusted to a maximum 12" height with brick or precast ASTM C478 grade rings.
6. Manhole top Type 8 may be substituted for a Type 7, if the minimum dimensions are not reduced.
7. Manhole top Type 7 may be substituted for Type 8, if the minimum thickness (h) above pipe opening cannot be maintained with Type 8.

MANHOLE TOPS

MANHOLE FRAMES AND MANHOLE TOPS

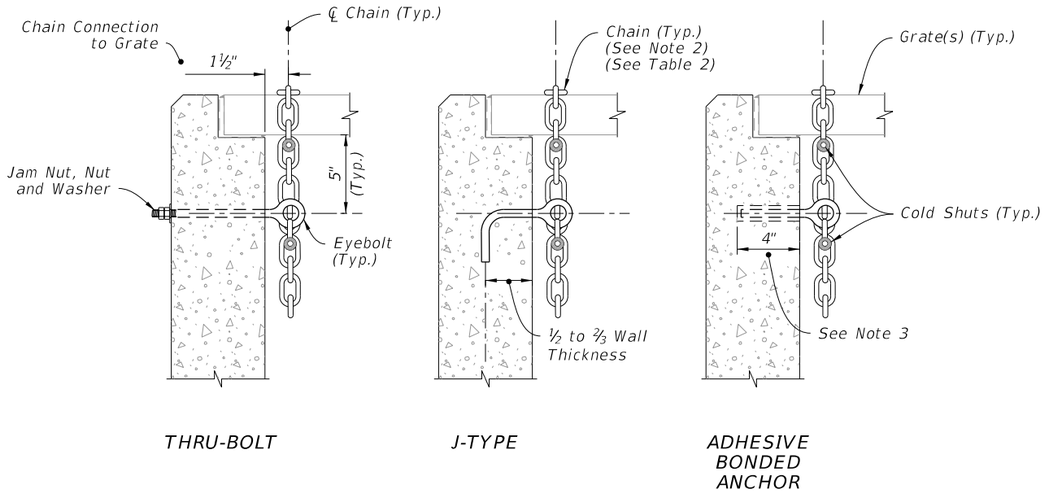

NOTES:

1. Install either a ½" Ø x 1" Diameter Threaded Straight (Thru-Bolt), a J-Type, or an adhesive Bonded Anchor Eyebolt.
2. Install a 5/16" Chain and 3/16" Cold Shuts. When chaining two grates together provide adequate loop for easy handling.
3. Install adhesive bonded anchor option with a minimum of 4" embedment, and in accordance with Specification 416.

TABLE 2
EYEBOLT AND CHAIN REQUIREMENTS

Index Number	Inlet Type	Eye-Bolts	Length of Chain	Handling & Remarks
425-030	1	1	4'-0"	Slide & Spin
	2	2	2 @ 4'-0"	Slide & Spin
425-031	N/A	1	3'-8"	Slide or Slide & Spin
425-032	N/A	1	4'-0"	Slide & Spin
425-040	S	1	4'-0"	Slide & Spin
425-041	V	1	4'-0"	Slide & Spin
425-050	A	1	3'-0"	Slide
425-051	B	1	5'-0"	Slide & Spin
425-052	C	1	2'-6"	Slide & Spin
	D	1	2'-6"	Slide & Spin
	E	2	2 @ 2'-6"	Slide & Spin
	H	2	2 @ 2'-6"	Flip Ctr. Grate and Slide & Spin Single Free Grate
			1 or 2 @ 1'-6"	Center Grate(s) Chained to One End Grate
425-053	F	1	3'-6"	Flip or Slide & Spin
	G	1	6'-0"	Slide
			2'-0"	Lifting Loop
425-054	J	1	4'-0"	Slide & Spin

LOCKING GRATES TO INLETS

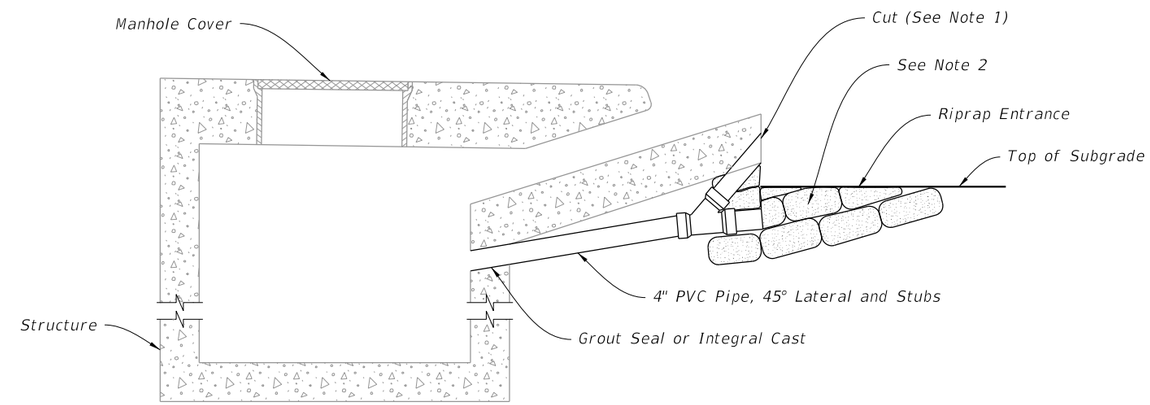

NOTES:

1. Bevel cut upper stub to match forming for apron face. Capping or plugging of upper stub is not required. Remove friable base material at stub opening to permit covering of opening with structural course material.
2. Remove riprap, cement PVC cap on lower stub, and place compacted fill in entrance prior to placing base material.

SUBGRADE AND BASE TEMPORARY DRAINS

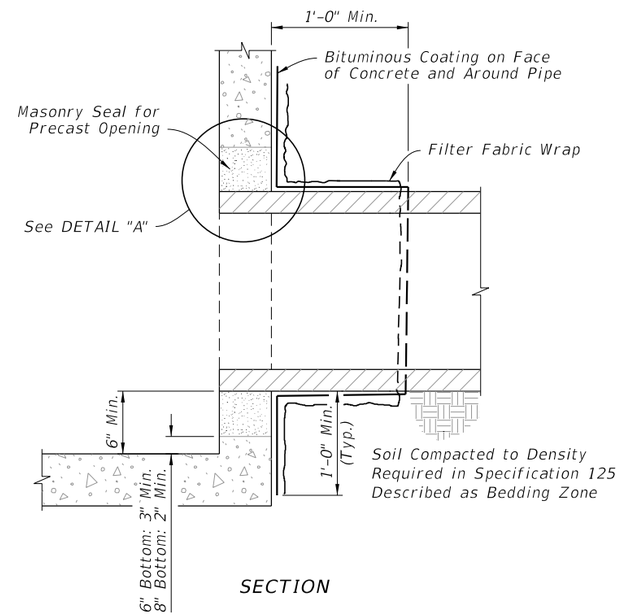

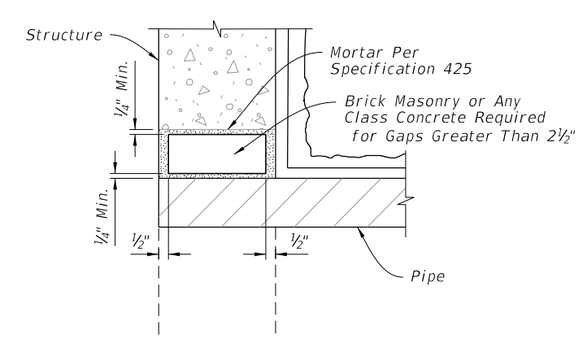

PIPE TO STRUCTURE FILTER FABRIC WRAP

LOCKING GRATES, SUBGRADE AND BASE TEMPORARY DRAINS, AND PIPE TO STRUCTURE FILTER FABRIC WRAP

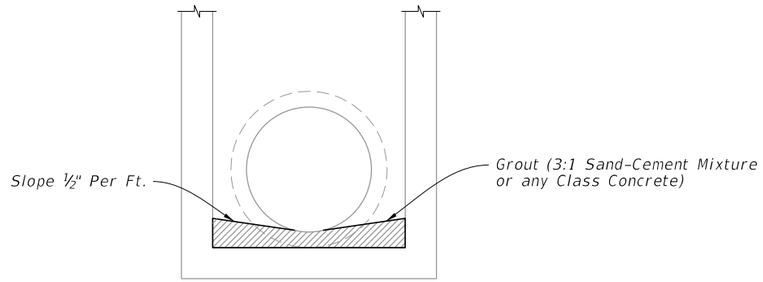

NOTE: For all structures unless excluded by special detail.

DRAINAGE STRUCTURE INVERT

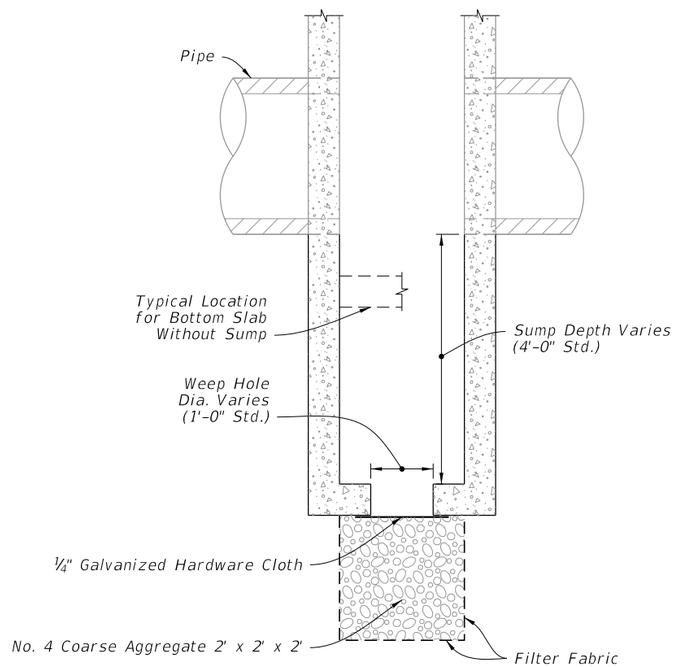

NOTES:

1. Construct sumps in inlets and manholes connecting to French Drains unless excluded in the Plans.
2. Construct sumps only where called for in the Plans at all other locations.
3. Construct weep holes in sump bottom only where called for in the Plans.

SUMP BOTTOM

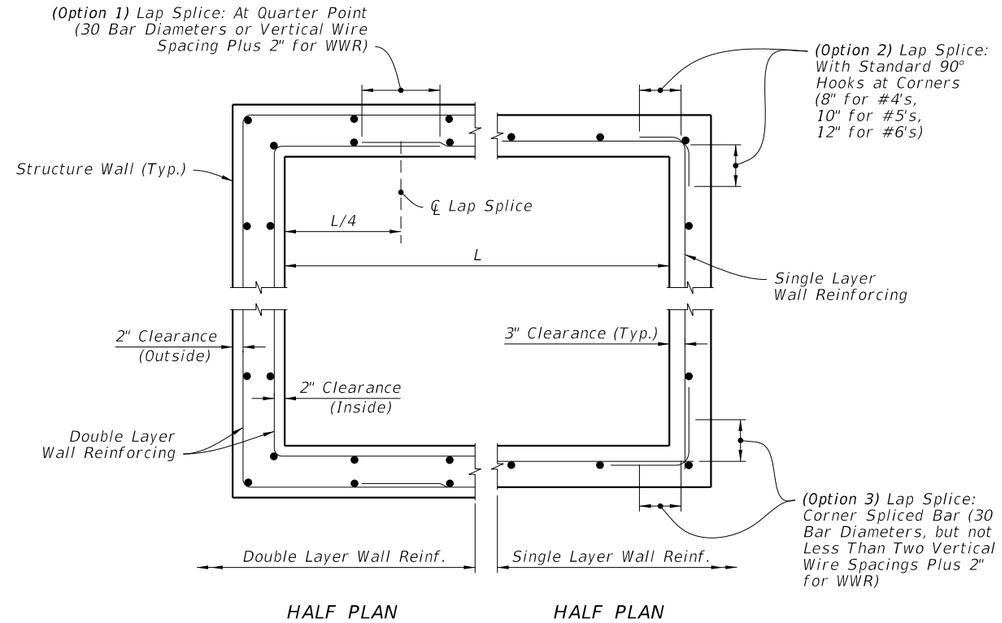

WALL REINFORCING SPLICE DETAILS

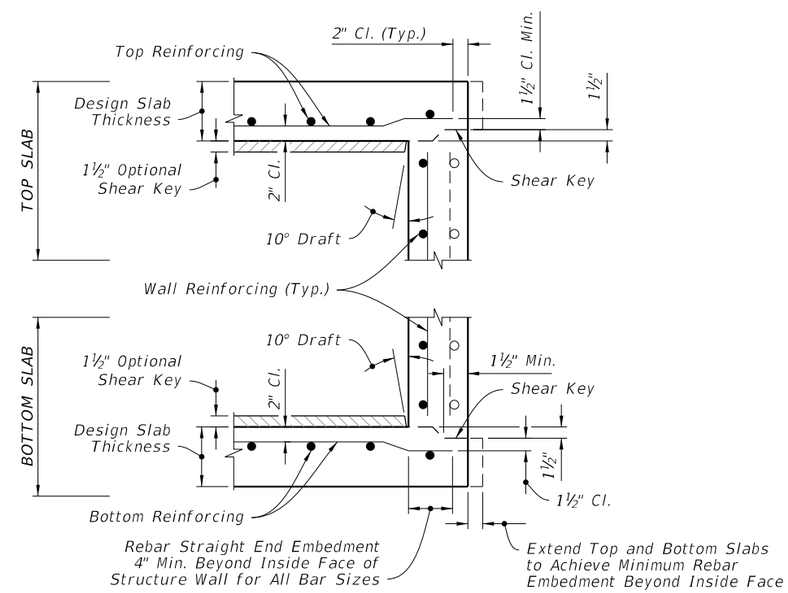

NOTES:

1. See Sheet 6 for optional construction joints.
2 Bend bars as required to maintain cover.

TYPICAL SLAB TO WALL DETAILS
(PRECAST STRUCTURE SHOWN)

DRAINAGE STRUCTURE INVERT, SUMP BOTTOM, WALL REINFORCING SPLICE DETAILS, AND TYPICAL SLAB TO WALL DETAILS

EXAMPLE TABLE OF EQUIVALENT STEEL AREA

SCHEDULE	GRADE 60 REINFORCING BAR		EQUIVALENT GRADE 40 REINFORCING BAR		EQUIVALENT 65 KSI SMOOTH WELDED WIRE REINFORCEMENT		EQUIVALENT 70 KSI DEFORMED WELDED WIRE REINFORCEMENT	
	Bar Size & Spacing	Steel Area (in^2/ft)	Bar Size & Spacing	Steel Area (in^2/ft)	Style Designation	Steel Area (in^2/ft)	Style Designation	Steel Area (in^2/ft)
A	#3 @ 6½" Ctrs. #4 @ 12" Ctrs.	0.20	#3 @ 4½" Ctrs. #4 @ 8" Ctrs. #5 @ 12" Ctrs.	0.30	3"x3"–W4.6xW4.6 4"x4"–W6.2xW6.2 6"x6"–W9.2xW9.2	0.1846	3"x3"–D4.3xD4.3 4"x4"–D5.7xD5.7 6"x6"–D8.6xD8.6	0.1714
B	#3 @ 5½" Ctrs. #4 @ 10" Ctrs.	0.24	#3 @ 3½" Ctrs. #4 @ 6½" Ctrs. #5 @ 10" Ctrs.	0.36	3"x3"–W5.5xW5.5 4"x4"–W7.4xW7.4 6"x6"–W11.1xW11.1	0.2215	3"x3"–D5.1xD5.1 4"x4"–D6.9xD6.9 6"x6"–D10.3xD10.3	0.2057
Special 1	#3 @ 5" Ctrs.. #4 @ 9" Ctrs.	0.267	#3 @ 3" Ctrs. #4 @ 6" Ctrs. #5 @ 9" Ctrs.	0.40	3"x3"–W6.2xW6.2 4"x4"–W8.2xW8.2 6"x6"–W12.3xW12.3	0.2465	3"x3"–D5.7xD5.7 4"x4"–D7.6xD7.6 6"x6"–D11.4xD11.4	0.2289
C	#3 @ 3½" Ctrs. #4 @ 6½" Ctrs. #5 @ 10" Ctrs.	0.37	#4 @ 4" Ctrs. #5 @ 6½" Ctrs. #6 @ 9½" Ctrs.	0.555	3"x3"–W8.5xW8.5 4"x4"–W11.4xW11.4 6"x6"–W17.1xW17.1	0.3415	3"x3"–D7.9xD7.9 4"x4"–D10.6xD10.6 6"x6"–D15.9xD15.9	0.3171
D	#4 @ 4½" Ctrs. #5 @ 7" Ctrs. #6 @ 10" Ctrs.	0.53	#4 @ 3" Ctrs. #5 @ 4½" Ctrs. #6 @ 6½" Ctrs.	0.795	3"x3"–W12.2xW12.2 4"x4"–W16.3xW16.3 6"x6"–W24.5xW24.5	0.4892	3"x3"–D11.4xD11.4 4"x4"–D15.1xD15.1 6"x6"–D22.7xD22.7	0.4543
E	#4 @ 3" Ctrs. #5 @ 5" Ctrs. #6 @ 7" Ctrs.	0.73	#5 @ 3½" Ctrs. #6 @ 4½" Ctrs. #7 @ 6½" Ctrs.	1.095	3"x3"–W16.8xW16.8 4"x4"–W22.5xW22.5 6"x6"–W33.7xW33.7	0.6738	3"x3"–D15.6xD15.6 4"x4"–D20.9xD20.9 6"x6"–D31.3xD31.3	0.6257
F	#5 @ 3½" Ctrs. #6 @ 5" Ctrs. #7 @ 7" Ctrs.	1.06	#6 @ 3" Ctrs. #7 @ 4½" Ctrs. #8 @ 6" Ctrs.	1.59	3"x3"–W24.5xW24.5 4"x4"–W32.6xW32.6 6"x6"–W48.9xW48.9	0.9785	3"x3"–D22.7xD22.7 4"x4"–D30.3xD30.3 6"x6"–D45.4xD45.4	0.9086
Special 2	#5 @ 3" Ctrs. #6 @ 4" Ctrs. #7 @ 5½" Ctrs.	1.24	#7 @ 4" Ctrs. #8 @ 5" Ctrs.	1.86	3"x3"–W28.6xW28.6 4"x4"–W38.2xW38.2 6"x6"–W57.2xW57.2	1.1446	3"x3"–D26.6xD26.6 4"x4"–D35.4xD35.4 6"x6"–D53.1xD53.1	1.0629
G	#6 @ 3½" Ctrs. #7 @ 5" Ctrs.	1.46	#7 @ 3" Ctrs. #8 @ 4" Ctrs.	2.19	3"x3"–W33.7xW33.7 4"x4"–W44.9xW44.9	1.3477	3"x3"–D31.3xD31.3 4"x4"–D41.7xD41.7	1.2514

NOTES:

1. See inlet indexes for optional precast inlet construction details up to depths of 15'.

2. Interior dimensions of an Alt. "B" Bottom may be adjusted to reflect these inlet interior dimensions when precast units are used in conjunction with Alt. "B" Structure Bottoms, Index 425-010.

3. Use concrete meeting the requirements of ASTM C478 or Class IV for precast structures with 6" wall or slab thickness.

4. Reinforcement may be deformed bar reinforcement or welded wire reinforcement. Bar reinforcement other than 60 ksi may be used, however only two grades are recognized: Grade 40 and Grade 60. Smooth welded wire reinforcement will be recognized as having a design strength of 65 ksi and deformed welded wire reinforcement will be recognized as having a design strength of 70 ksi. The area of reinforcement required may be adjusted in accordance with the Equivalent Steel Area Table provided. Use the following equations to determine the steel area and spacing for bars not otherwise specified:

   Grade 40 Steel Area = As40= 60/40 x As60

   Smooth Welded Wire Reinforcement Steel Area = As65= 60/65 x As60

   Deformed Welded Wire Reinforcement Steel Area = As70= 60/70 x As60

   When a reduced area of reinforcement is provided, any maximum bar spacing shown must also be reduced as determined by the following equations, unless otherwise shown:

   Max. Grade 40 Bar Spacing = Grade 60 Bar Spacing

   Max. Smooth Welded Wire Spacing = Grade 60 Bar Spacing x 0.86

   Max. Deformed Welded Wire Spacing = Grade 60 Bar Spacing x 0.74

   When an increased area of reinforcing is provided, the maximum bar spacing may be increased by the squared ration of increased steel area, but not to exceed 12":

   $$\text{Max. Bar Spacing Provided} \leq \text{Max. Bar Spacing Required} \times \left(\frac{\text{Steel Area Provided}}{\text{Min. Steel Area Required}}\right)^2$$

   Use wire no smaller than than W3.1 or D4.0, or larger and with spacing 8" or less. Use bar reinforcement displaying the minimum yield designation grade mark, or either the number 60 or one (1) grade mark line to be acceptable at the higher value. Use maximum bar spacing no greater than two (2) times the slab thickness with a maximum spacing of 12" or three (3) times the wall thickness, with a maximum spacing of 18" for vertical bars and 12" for horizontal bars. Wires smaller than W3.1 or D4.0 may be used in the walls of ASTM C 478 round structure bottoms and round risers.

5. Fiber-reinforced concrete may be substituted for conventional steel reinforcement in accordance with the Structures Design Guidelines. Submit shop drawings corresponding to an approved fiber-reinforced concrete mix design for approval to the State Drainage Office.

9/21/2021 1:45:48 PM

PRECAST OPTION AND EQUIVALENT REINFORCEMENT SUBSTITUTION

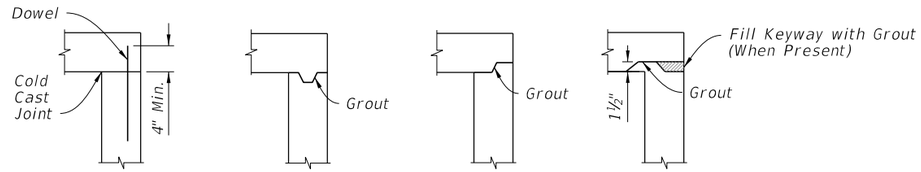

TOP SLABS TO WALL JOINTS

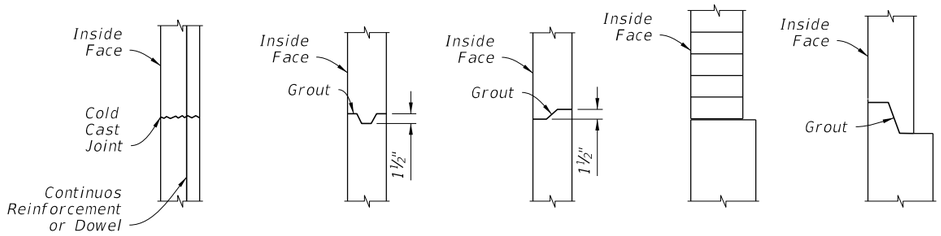

WALL JOINTS

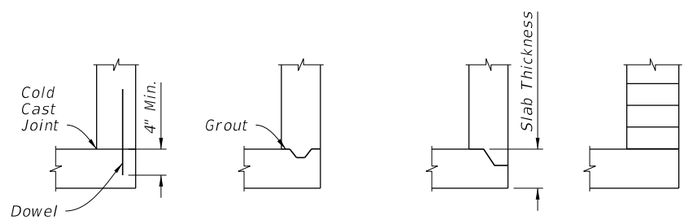

BOTTOM SLAB TO WALL JOINTS

NOTES:

1. One or more types of joints may be used in a single structure, except brick wall structure. Brick wall construction is permitted on circular units only.
2. All grouted joints are to have a maximum thickness of 1".
3. Keyways are to be a minimum of 1½" deep.
4. Joint dowels are to be #4 bars, 12" long with a minimum of 6 bars per joint approximately evenly spaced for circular structures or at maximum 12" spacing for rectangular structures. Bars may be either Adhesive Bonded Dowels in accordance with Specification 416, or placed approximately 6" into fresh concrete leaving the remainder to extend into the secondary cast. Welded wire reinforcement may be substituted for the dowel bar in accordance with the equivalent steel area table on Sheet 5.
5. Minimum cover on dowel reinforcing bars is 2" to outside face of structure.
6. Seal joints between wall segments and between wall segments and top or bottom slabs with preformed plastic gasket material inaccordance with Specification 430 or non-shrink grout in accordance with Specification 934.
7. Insert products approved by the Engineer may be used in lieu of dowel embedment.

CONSTRUCTION JOINT OPTIONS

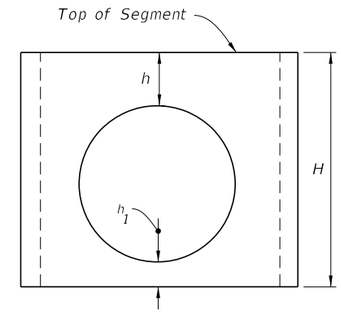

When	Then (Reqd.)
$6" \le h_1 < 0.75H$ (Min.)	$h \ge 0.4H$
$h_1 \ge 0.75H$ (Min.)	$h \ge H$ (Min.)

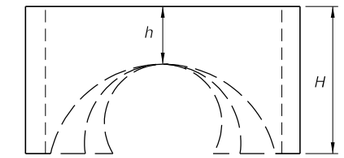

H (Min.) ≤ h ≥ 0.4H

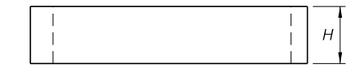

H ≥ H Min.

NOTES:

1. Segments may be inverted. Opening for pipe is the pipe OD plus 6" (± 2" tolerance).
2. If h can not be attained, then a top or bottom slab must be attached to the segment as shown below.

TABLE 3 Minimum Value for H	
H (min.)	Box or Riser Diameter
1'-0"	3'-6" & 4'-0"
1'-6"	5'-0" & 6'-0"
2'-0"	>6'-0"

RISER SEGMENTS OTHER THAN DOWEL

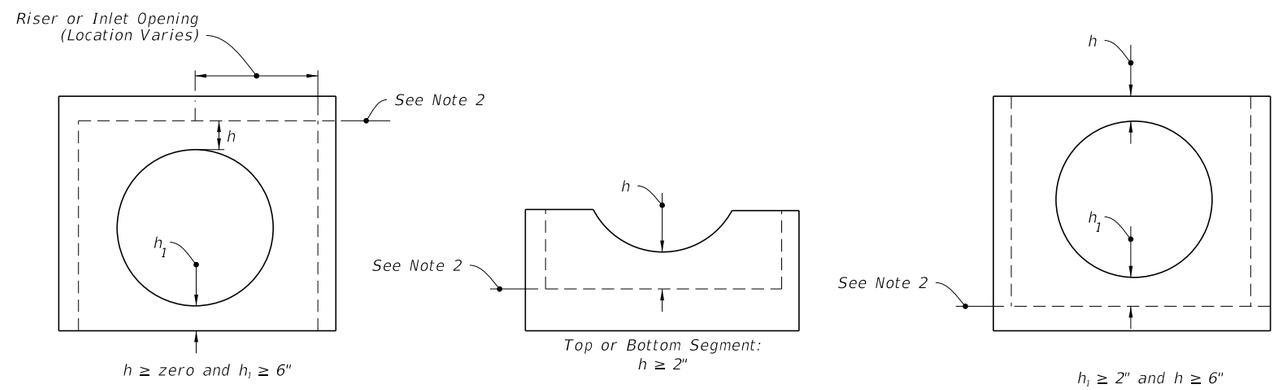

NOTES:

1. h may be less than 6" when approved by the Engineer, but not for inlet segments at finish grade elevation.
2. Dowel construction joint or monolithic cast only.

SEGMENTS FOR SLAB TO WALL DOWEL CONSTRUCTION JOINTS OR MONOLITHIC CAST

MINIMUM BOX AND RISER SEGMENT DIMENSIONS

CONSTRUCTION JOINT OPTIONS AND MINIMUM BOX AND RISER SEGMENT DIMENSIONS

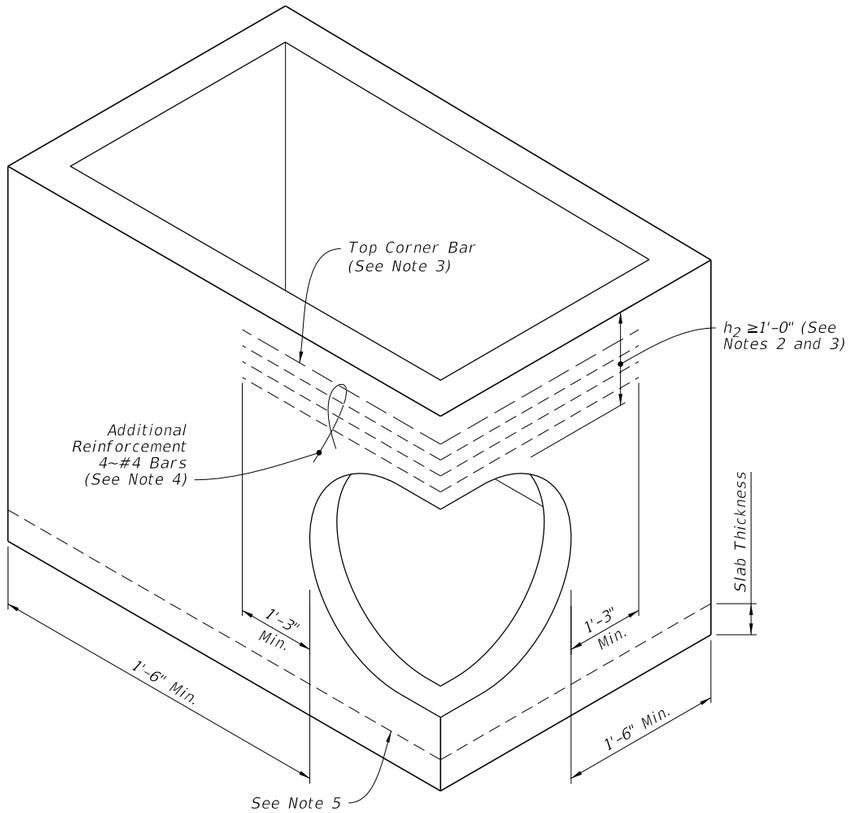

NOTES:

1. Submit Shop Drawings of corner openings for approval by the Engineer.
2. h_2 may be less than 1'-0" when a minimum 1'-0" deep segment, 8" slab or curb inlet is provided above the corner opening.
3. For inlet segments at finish grade elevation, substitute a #8 Bar for the top corner bar when 1'-0" ≤ h_2 < 2'-0".
4. Install bars continuously around corner and evenly spaced. Tie additional reinforcement to the outside of vertical wall reinforcement.
5. Dowel construction joint or monolithically cast wall and slabs.

PIPE OPENING AT CORNER

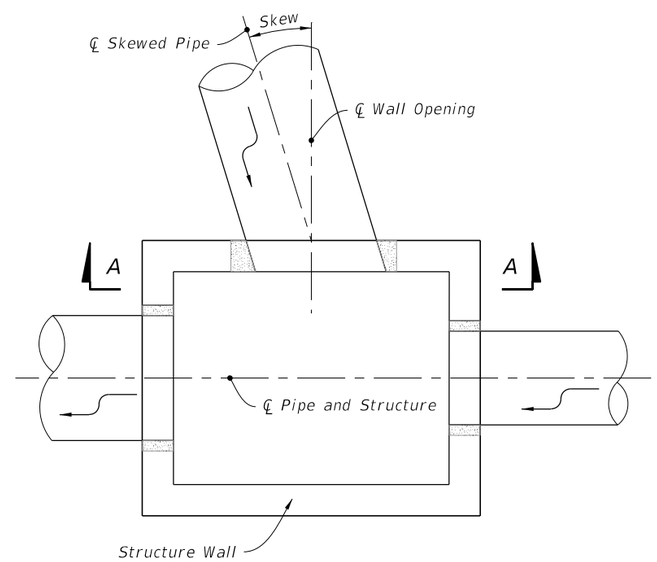

PLAN

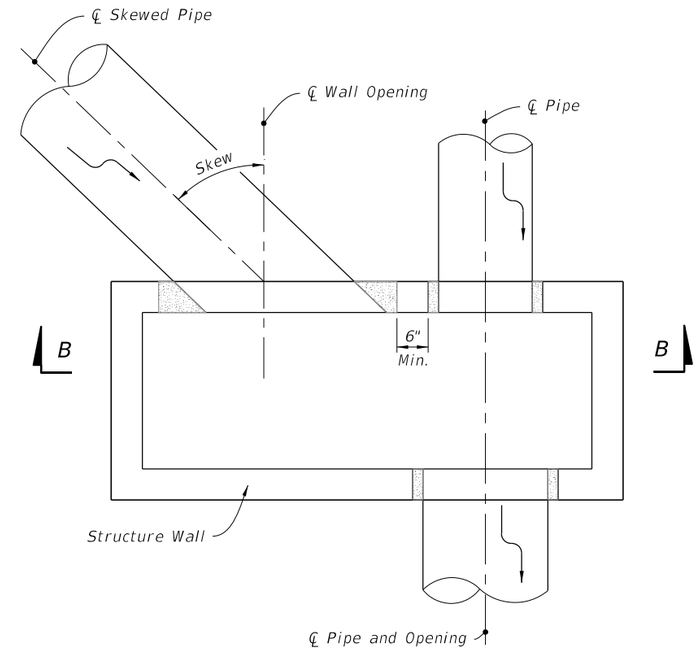

PLAN

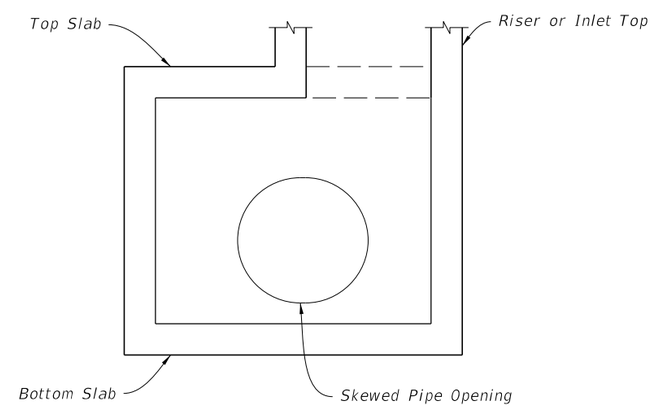

SECTION A-A

SKEWS ≤ 45°
(Not Centered)

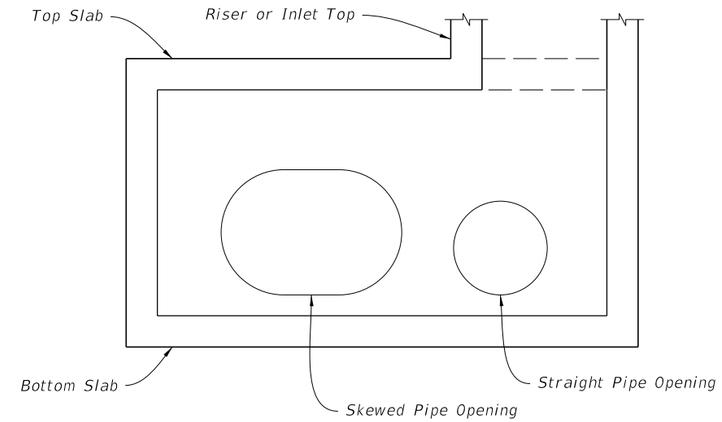

SECTION B-B

SKEWS > 45°
(Not Centered)

SKEWED PIPE IN RECTANGULAR STRUCTURES
(See Table 4 on Sheet 8)

SKEWED PIPE IN RECTANGULAR STRUCTURES

LAST REVISION	REVISION	DESCRIPTION:	FDOT	FY 2022-23 STANDARD PLANS	SUPPLEMENTARY DETAILS FOR DRAINAGE STRUCTURES	INDEX	SHEET
11/01/20						425-001	7 of 8

9/21/2021 1:45:50 PM

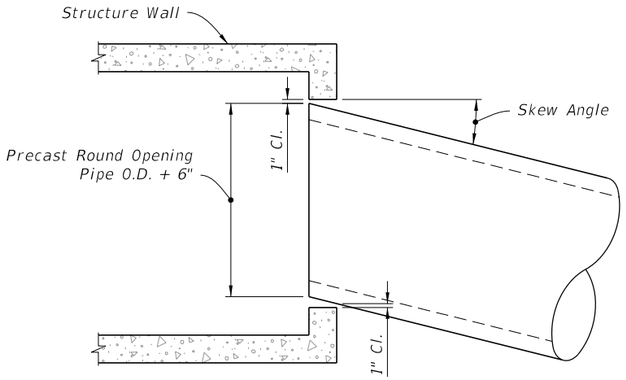

PLAN VIEW

TABLE 4 - MAXIMUM PIPE SKEW FOR PRECAST ROUND OPENINGS													
	WALL THICKNESS	PIPE SIZE											
		18"	24"	30"	36"	42"	48"	54"	60"	66"	72"	78"	84"
MAXIMUM SKEW ANGLE	8"	19°	17°	16°	16°	15°	14°	14°	13°	13°	13°	12°	12°
	6"	21°	20°	18°	17°	17°	16°	15°	15°	14°	14°	13°	13°

NOTE:
These values are based on 2" clearance for precast structures. Larger skews are possible for Cast-In-Place Structures or elliptical pipe openings when approved by the Engineer.

MAXIMUM PIPE SKEW FOR PRECAST ROUND OPENINGS

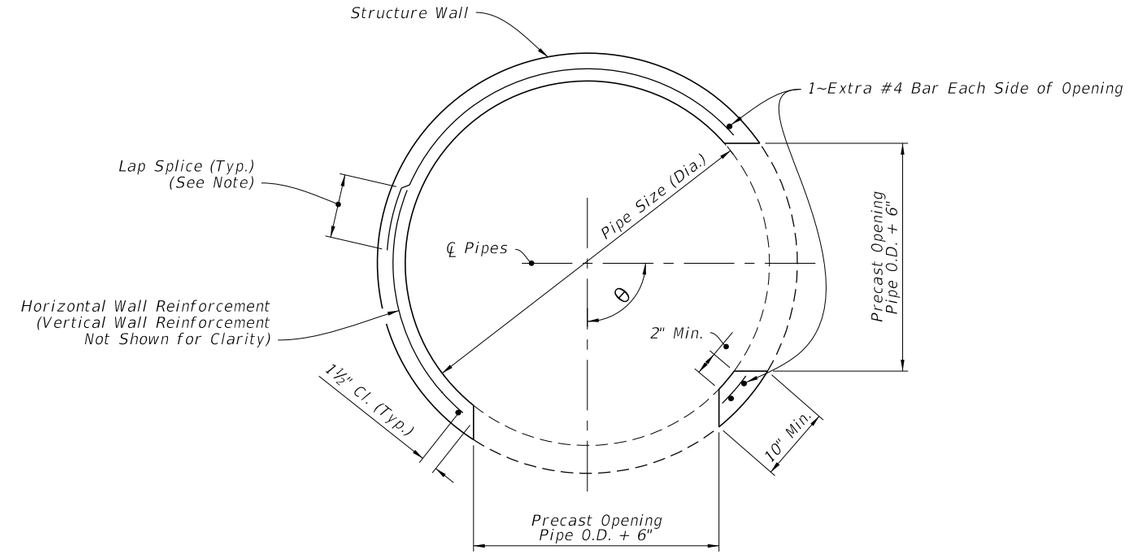

PLAN VIEW

NOTE:
Lap splice: 20 bar diameter for deformed wire or bar, but not less than vertical wire spacing plus 2" for WWR or 40 bar diameters for smooth wire.

MULTIPLE PIPE CONNECTIONS - PRECAST ROUND STRUCTURES

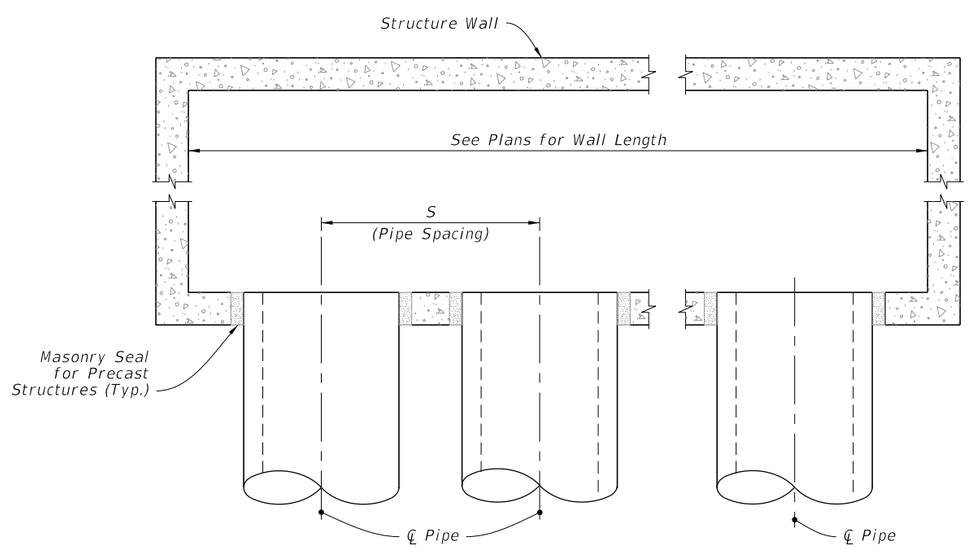

PLAN VIEW

TABLE 5 - MINIMUM SIZES FOR MULTIPLE PARALLEL PIPE CONNECTIONS	
PIPE SIZE	PIPE SPACING (S)
18"	2'-10"
24"	3'-5"
30"	4'-3"
36"	5'-1"
42"	6'-0"
48"	6'-9"
54"	7'-8"
60"	8'-6"
66"	9'-0"
72"	10'-0"
78"	10'-9"
84"	11'-8"

MULTIPLE PARALLEL PIPE CONNECTIONS - RECTANGULAR STRUCTURES

9/21/2021 1:45:51 PM

MISCELLANEOUS PIPE CONNECTION DETAILS

GENERAL NOTES:

1. Work this Index with Specification 425 and Index 425-001.

2. Type P standard structure bottoms are 4'-0"diameter and smaller (Alt. A) and 3'-6" square (Alt. B) . Larger standard structure bottoms are designated Type J. Risers are permitted for all structures.

3. Walls of circular structures (Alt. A) constructed in place may be of brick or reinforced concrete. Construct precast and rectangular structures (Alt. B) with reinforced concrete only.

4. Wall thickness and reinforcement are for either reinforced cast-in-place or precast concrete units except that precast circular units may be furnished with walls in accordance with ASTM C478 (See Table 1).

5. Top and bottom slab thickness and reinforcement are for precast and cast-in-place construction. Use Class II concrete, except when Class IV concrete is shown in the Plans.

6. Alt. A or Alt. B structure bottoms may be used in conjunction with curb inlet tops Types 1, 2, 3, 4, 5, 6, 9, and 10, and any manhole or junction box. Alt. B structure bottoms may be used in conjunction with curb inlet Types 7 & 8, or any ditch bottom inlet.

7. Rectangular structures may be rotated as directed by the Engineer in order to facilitate connections between the structure walls and pipes.

8. Use straight embedment reinforcement in top and bottom slabs ,except when ACI hooks are specifically required.

9. Construct corner fillets as shown for rectangular structures used with circular risers and inlet throats, and when used on skew with rectangular risers, inlets, and inlet throats. Construct fillets in the top slab of the Alt. A structure bottoms when used with the Type B risers. Reinforce each fillet with two #5 bars.

10. Units larger than specified standards may be substituted at the contractor's option when these units will not cause or increase the severity of utility conflicts. Furnish such larger units at no additional cost to the Department. Larger Alt. A units cannot replace Alt. B units without approval of the Engineer. This Note applies to this Index only.

REINFORCEMENT NOTES:

1. Locate wall reinforcement in rectangular structures as shown in the WALL REINFORCEMENT SPLICE DETAILS in Index 425-001.

2. Provide a minimum 2"clear cover for all reinforcement unless otherwise noted and except for 3'6"diameter ASTM C478 units.

3. Additional bars used to restrain hole formers for precast structures with grouted pipe connections may be left flush with the hole surface.

4. Cut or bend reinforcement at pipe openings to maintain cover.

5. Remove exposed ends of reinforcing at precast pipe openings and grouted joints to 1" below the concrete surface and seal with a Type F Epoxy meeting the requirements of Specification 926.

6. Equivalent area smooth or deformed welded wire reinforcement may be substituted in accordance with Index 425-001.

TABLE OF CONTENTS:

Sheet	Description
1	General Notes and Contents
2	Dimensional and Reinforcing Details
3	Tables 1, 2, 3, and 4
4	Tables 5 and 6

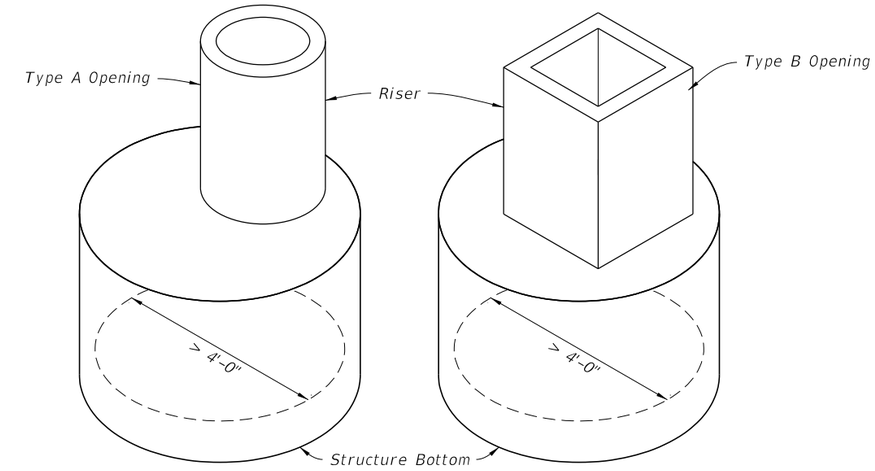

ALTERNATE A

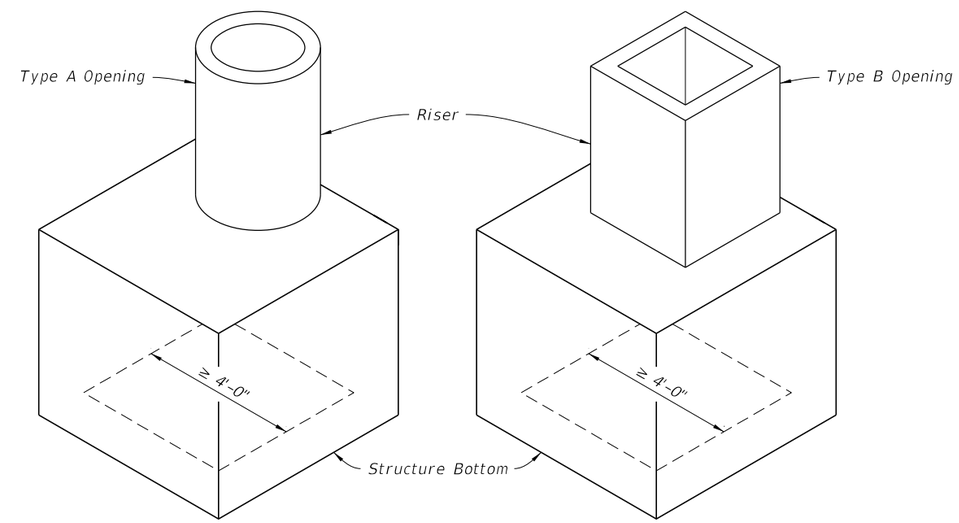

ALTERNATE B

TYPE J

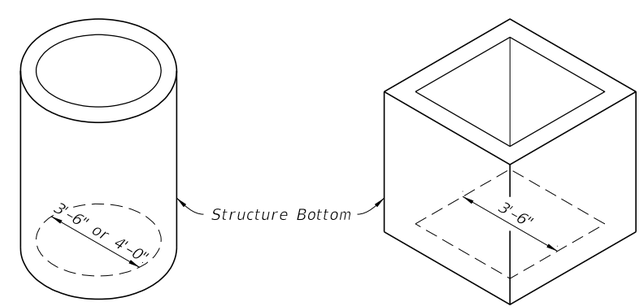

ALTERNATE A ALTERNATE B

TYPE P

9/21/2021 1:45:52 PM

LAST REVISION	REVISION	DESCRIPTION:			INDEX	SHEET
11/01/20			FY 2022-23 STANDARD PLANS	STRUCTURE BOTTOMS TYPE J AND P	425-010	1 of 4

ALTERNATE A NOTES:

1. Rotate #4 Bars as required to maintain cover.
2. Construct the top or riser of the structure according the top slab to the "Special Top Slab" details, when the inside diameter of a round structure is not more than 1'-6" larger than the opening in the riser or top slab.
3. Alternate A slab reinforcing not applicable for Type A, B, C, D & E Ditch Bottom Inlets or Type S & V Gutter Inlets. See Indexes 425-040, 425-041, 425-050, 425-051, and 425-052.

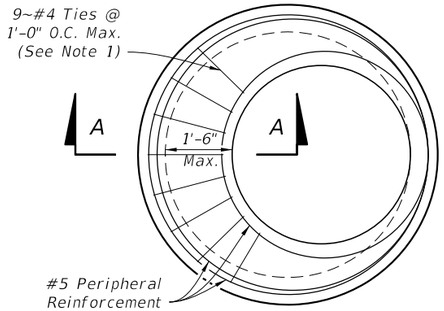

PLAN

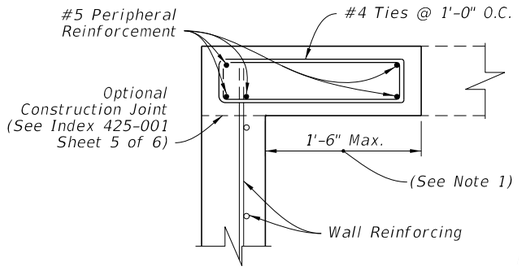

SECTION A-A

SPECIAL TOP SLAB

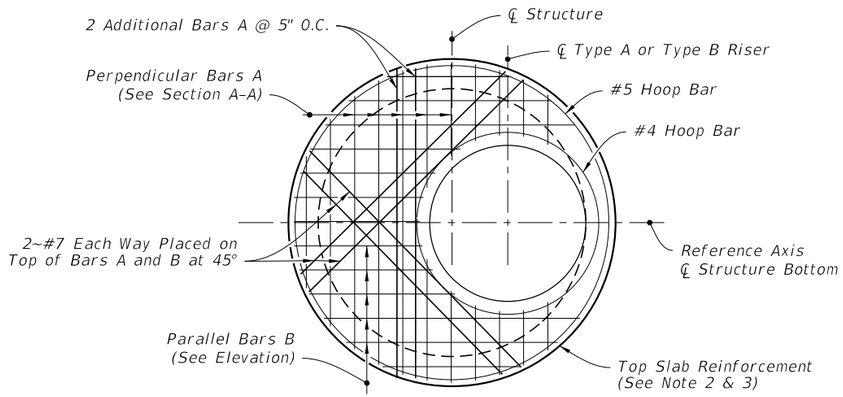

PLAN

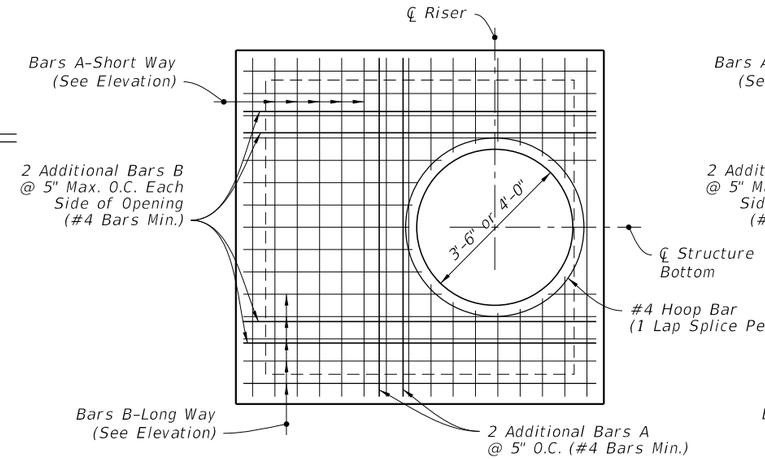

TYPE A - ROUND RISER OPENING

PLAN

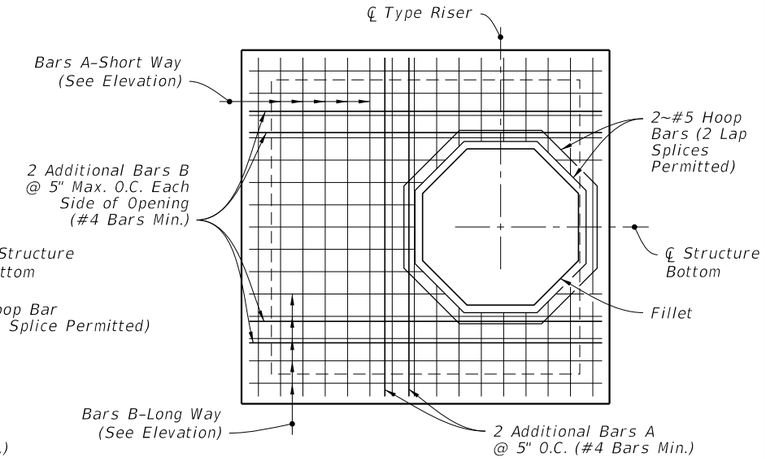

TYPE B - SQUARE RISER OPENING

PLAN

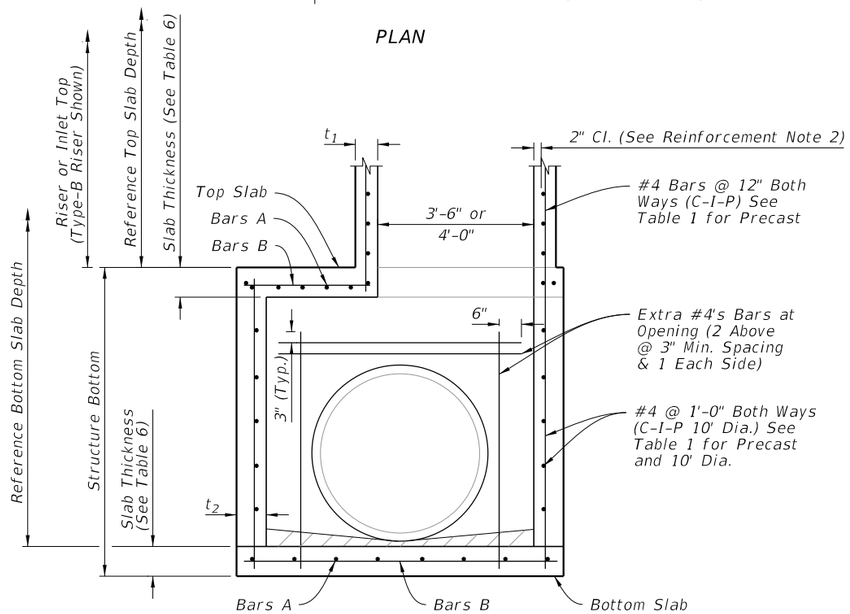

ELEVATION

TYPE J BOTTOM - ALTERNATE A

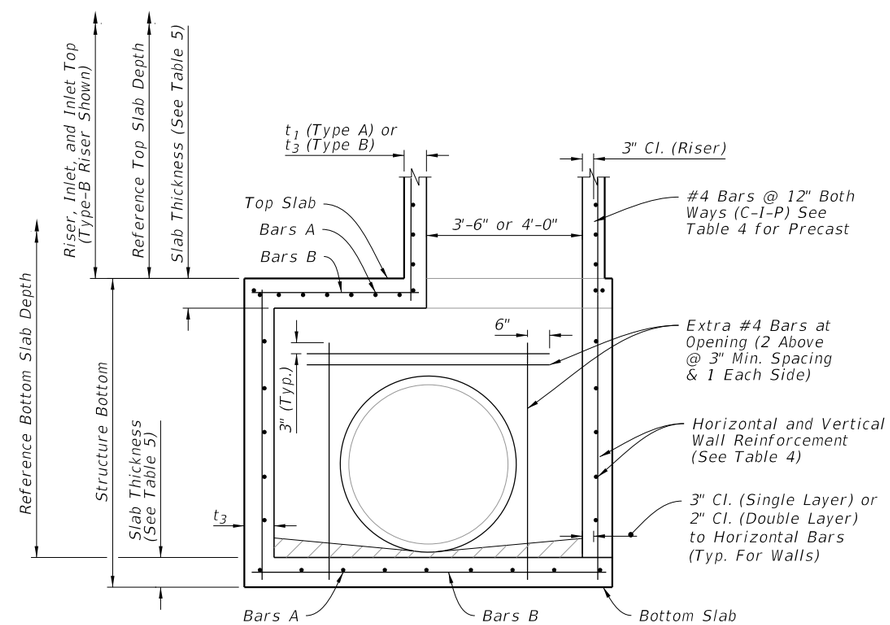

ELEVATION

TYPE J BOTTOM - ALTERNATE B

DIMENSIONAL AND REINFORCING DETAILS

LAST REVISION	REVISION	DESCRIPTION:	FY 2022-23 STANDARD PLANS	STRUCTURE BOTTOMS TYPE J AND P	INDEX	SHEET
11/01/20					425-010	2 of 4

TABLE 1 - ALTERNATE A - STRUCTURES

TYPE	STRUCTURE/RISER DIAMETER (ft)	CAST-IN-PLACE ITEMS CLASS II CONCRETE			PRECAST ITEMS				
					CLASS II CONCRETE			ASTM C478	
		t_1 RISER (in.)	t_2 BOTTOM (in.)	A_S (in.²/ft.)	t_1 RISER (in.)	t_2 BOTTOM (in.)	A_S (in.²/ft.)	t_1 or t_2 (in.)	A_2*** (in.²/ft.)
P	3'-6"	6	8	0.20	6	8	0.20	4**	0.105
P	4'-0"	6	8	0.20	6	8	0.20	5**	0.120
J	5'-0"	–	8	0.20	–	8	0.20	6**	0.150
J	6'-0"	–	8	0.20	–	8	0.20	6	0.180
J	7'-0"	–	8	0.20	–	8	0.20	7	0.210
J	8'-0"	–	8	0.20	–	8	0.20	8	0.240
J	10'-0"	–	10	0.40##	–	10	0.40##	10	0.300
J	12'-0"	–	10	0.40##	–	12	0.40##	12	0.360

t_1 and t_2 – Wall Thickness.

A_S – Vertical and horizontal areas of reinforcement.

##Provide 0.20 eq. in.²/ft. at each face, 12" max. bar spacing.

**Modified minimum wall thickness.

***Min. total circumferential reinforcement for continuous steel hoops:

A2 = 0.40 sq. in. for riser section height equal or less than 2'-0" (2 hoop min.)

A_2 = 0.60 sq. in. for riser section height more than 2'-0" up to 4'-0" (3 hoop min.)

Areas of reinforcing for precast items are based on Grade 60 reinforcing.

No reduction in the area of reinforcement is allowed for welded wire fabric in Table 1.

Area of vertical reinforcing may be reduced in accordance with ASTM C478.

TABLE 2 - ALTERNATE B SQUARE AND RECTANGULAR STRUCTURES

TYPE	WALL LENGTH (FT)	MAX. DEPTH (FT)	WALL THICKNESS (t_3)	
			C-I-P (in.)	PRECAST (in.)
P	≤ 3'-6"	40	6 Riser 8 Bottom	6
J	4'-0"	40	8	6
J	5'-0"	22	–	6
J	6'-0"	15	–	6
J	5'-0" to 9'-0"	40	8	8
J	10'-0"	26	8	8
J	10'-0" to 12'-0"	40	10	9
J	16'-0"	35	–	9
J	16'-0"	40	10	10
J	20'-0"	25	–	9
J	20'-0"	30	10	10

See Table 4 for Reinforcing Schedule.

TABLE 3 - REINFORCING SCHEDULE

SCHEDULE	GRADE 60 BARS OR 65 KSI & 70 KSI WELDED WIRE REINFORCING			
	GRADE 60 AREA (in.² /ft)	MAXIMUM SPACING		
		GR 60 BARS (in.)	WWR EQUIV. AREA	
			65 KSI (in.)	70 KSI (in.)
A12	0.20	12	8	8
A6	0.20	6	5	4½
B10	0.24	10	8	7½
B5.5	0.24	5½	5	4
C6.5	0.37	6½	6	5
C3.5	0.37	3½	3	2½
D7	0.53	7	6	5
D4.5	0.53	4½	4	3½
E5	0.73	5	4	4
E3	0.73	3	3	3
F5	1.06	5	4	4
F3.5	1.06	3½	3	3
G5	1.45	5	4	4
G.3.5	1.45	3½	3	3
H4	1.75	4	3	3

TABLE 4 - WALL DESIGNS - RECTANGULAR STRUCTURES

VERTICAL REINFORCING			HORIZONTAL REINFORCING			WALL THICKNESS
WALL DEPTH	SCHEDULE		WALL DEPTH	SCHEDULE		
SIZE: 3'-6" & RISER						
≥1.17' – 40'	A12		≥1.17' < 10'	B10		6"/8"
			10' < 18'	B5.5		6"/8"
			18' < 29'	C6.5		6"/8"
			29' – 40'	C3.5		6"/8"
SIZE: 4'-0"						
≥1.17' – 40'	A12		≥1.17' < 6'	B10		6"/8"
			6' < 10'	B5.5		6"/8"
			10' < 20'	C6.5		6"/8"
			20' < 28'	C3.5		6"/8"
			28' – 40'	D4.5		6"/8"
SIZE: 5'-0"						
≥1.17' – 40'	A12		≥1.17' < 5'	B5.5		6"/8"
			5' < 9'	C6.5		6"/8"
			9' < 15'	C3.5		6"/8"
			15' < 22'	D4.5		6"/8"
			22' – 40'	E3		8"
SIZE: 6'-0"						
≥1.17' < 26'	A12		≥1.17' < 9'	C3.5		6"/8"
			9' < 15'	D4.5		6"/8"
			15' < 26'	E3		8"
	Inside	Outside		Inside	Outside	
26' – 40'	A12	A12	26' – 40'	D7	D7	8"
SIZE: 7'-0"						
	Inside	Outside		Inside	Outside	
≥1.17' < 25'	A12	A12	≥1.17' < 7'	B10	B10	8"
26' – 40'	B10	B10	7' < 10'	B5.5	B5.5	8"
			10' < 20'	C6.5	C6.5	8"
			20' < 30'	D7	D7	8"
			30' – 40'	E5	E5	8"
SIZE: 8'-0"						
	Inside	Outside		Inside	Outside	
≥1.17' < 20'	A12	A12	≥1.17' < 6'	B5.5	B5.5	8"
20' – 40'	C6.5	C6.5	6' < 13'	C6.5	C6.5	8"
			13' < 22'	D7	D7	8"
			22' < 31'	E5	E5	8"
			31' – 40'	F5	F5	8"
SIZE: 9'-0"						
	Inside	Outside		Inside	Outside	
≥1.17' < 12'	A12	A12	≥1.17' < 8'	C6.5	C6.5	8"
12' < 28'	C6.5	C6.5	8' < 15'	D7	D7	8"
28' – 40'	D7	D7	15' < 23'	E5	E5	8"
			23' – 40'	F5	F5	8"
SIZE: 10'-0"						
	Inside	Outside		Inside	Outside	
≥1.17' < 10'	B10	B10	≥1.17' < 10'	D7	D7	8"
10' < 21'	C6.5	C6.5	10' < 17'	E5	E5	8"
21' < 26'	D7	D7	17' < 26'	F5	F5	8"
26' – 40'	C6.5	C6.5	26' – 40'	F5	F5	10"

VERTICAL REINFORCING			HORIZONTAL REINFORCING			WALL THICKNESS
WALL DEPTH	SCHEDULE		WALL DEPTH	SCHEDULE		
SIZE: 10'-0" (Precast Only)						
	Inside	Outside		Inside	Outside	
26' – 40'	D7	D7	26' – 40'	F5	F5	9"
SIZE: 12'-0"						
	Inside	Outside		Inside	Outside	
≥1.17' < 14'	B10	B10	≥1.17' < 10'	C6.5	C6.5	10"
14' < 25'	C6.5	C6.5	10' < 17'	D7	D7	10"
25' – 40'	D7	D7	17' < 24'	E5	E5	10"
			24' – 40'	F5	F5	10"
SIZE: 12'-0" (Precast Only)						
	Inside	Outside		Inside	Outside	
≥1.17' < 12'	B10	B10	≥1.17' < 10'	D7	D7	9"
12' < 24'	C6.5	C6.5	10' < 17'	D4.5	D4.5	9"
24' – 40'	D7	D7	17' < 23'	E5	E5	9"
			23' < 32'	F5	F5	9"
			32' – 40'	G5	G5	9"
SIZE: 16'-0"						
	Inside	Outside		Inside	Outside	
≥1.17' < 11'	C6.5	C6.5	≥1.17' < 13'	D7	D7	10"
11' < 20'	D7	D7	13' < 20'	E5	E5	10"
20' < 28'	E5	E5	20' < 28'	F5	F5	10"
28' – 40'	F5	F5	28' – 40'	G5	G5	10"
SIZE: 16'-0" (Precast Only)						
	Inside	Outside		Inside	Outside	
≥1.17' < 10'	C6.5	C6.5	≥1.17' < 9'	D7	D7	9"
10' < 18'	D7	D7	9' < 13'	D4.5	D4.5	9"
18' < 25'	E5	E5	13' < 19'	E5	E5	9"
25' – 35'	F5	F5	19' < 27'	F5	F5	9"
			27' – 35'	G5	G5	9"
SIZE: 20'-0"						
	Inside	Outside		Inside	Outside	
≥1.17' < 10'	C6.5	C6.5	≥1.17' < 8'	D7	D7	10"
10' < 17'	D7	D7	8' < 12'	E5	E5	10"
17' – 30'	E5	E5	12' < 20'	F5	F5	10"
			20' – 30'	G5	G5	10"
SIZE: 20'-0" (Precast Only)						
	Inside	Outside		Inside	Outside	
≥1.17' < 8'	C6.5	C6.5	≥1.17' < 8'	D4.5	D4.5	9"
8' < 13'	D7	D7	8' < 12'	E5	E5	9"
13' – 25'	E5	E5	12' < 19'	F5	F5	9"
			19' – 25'	G5	G5	9"

TABLE 4 NOTES:

1. Wall depth is measured to the top of the bottom slab for boxes and to the top of the intermediate slab for risers.
2. Wall height is the distance between top of lower slab to bottom of upper slab. Maximum wall height is 12' for wall lengths exceeding 5', or 10' for wall lengths exceeding 12'.
3. Wall lengths exceeding 6'-0" require two layers of reinforcing (See Table 4) with 2" of cover from the horizontal bars to the inside and outside faces for each layer.
4. Wall lengths exceeding the dimensions or depths shown in Table 4, or 12'-0" diameter require a special design.
5. Wall thickness and reinforcing for rectangular structures is based on the longer wall length.

TABLES 1, 2, 3, AND 4

TABLE 5 - SLAB DESIGNS - SQUARE AND RECTANGULAR STRUCTURES

(ALL SLABS 8" THICK EXCEPT AS NOTED - REINFORCING PARALLEL TO SHORT WAY AND LONG WAY)

SHORT-WAY		LONG-WAY	
SLAB DEPTH	SCHEDULE (Bars A)	SLAB DEPTH	SCHEDULE (Bars B)
SIZE: 3'-6" x UNLIMITED			
≥0.5' < 8'	B10	≥0.5' < 24'	B10
8' < 13'	B5.5	24'-40'	B5.5
13' < 31'	C6.5		
31'-40'	D7		
SIZE: 4' x UNLIMITED			
≥0.5' < 7'	B5.5	≥0.5' < 15'	B10
7' < 19'	C6.5	15' < 29'	B5.5
19' < 31'	D7	29'-40'	C6.5
31'-40'	E5		
SIZE: 5' x 5'			
≥0.5' < 3'	C6.5	≥0.5' < 3'	C6.5
3' < 7'	B5.5	3' < 13'	C6.5
7' < 22'	C6.5	13' < 22'	D7
22' < 29'	D7	22' < 29'	D4.5
29'-40'	E5	29'-40'	E5
SIZE: 5' x 6'			
≥0.5' < 12'	C6.5	≥0.5' < 3'	C6.5
12' < 26'	D7	3' < 9'	B5.5
26'-40'	E5	9' < 23'	C3.5
		23' < 35'	D4.5
		35'-40'	E5
SIZE: 5' x 7'			
≥0.5' < 10'	C6.5	≥0.5' < 10'	B5.5
10' < 20'	D7	10' < 31'	C3.5
20' < 34'	E5	31'-40'	D4.5
34'-40'	F5		
SIZE: 5' x 8'			
≥0.5' < 7'	C6.5	≥0.5' < 8'	B10
7' < 13'	D7	8' < 17'	B5.5
13' < 24'	E5	17' < 25'	C6.5
24'-40'	F5	25'-40'	C3.5
SIZE: 5' x 9'			
≥0.5' < 8'	C6.5	≥0.5' < 14'	B10
8' < 14'	D7	14' < 24'	B5.5
14' < 25'	E5	24' < 34'	C6.5
25'-40'	F5	34'-40'	C3.5
SIZE: 5' x UNLIMITED			
≥0.5' < 8'	C6.5	≥0.5' < 14'	B10
8' < 14'	D7	14' < 24'	B5.5
14' < 25'	E5	24' < 34'	C6.5
25'-40'	F5	34'-40'	C3.5

SHORT-WAY		LONG-WAY	
SLAB DEPTH	SCHEDULE (Bars A)	SLAB DEPTH	SCHEDULE (Bars B)
SIZE: 6' x 6'			
≥0.5' < 13'	C6.5	≥0.5' < 10'	C3.5
13' < 23'	D7	10' < 18'	D4.5
23'-40'	E5	18' < 27'	E5
		27' < 33'	E3
		33'-40'	F5
SIZE: 6' x 7'			
≥0.5' < 8'	C6.5	≥0.5' < 8'	C6.5
8' < 16'	D7	8' < 12'	C3.5
16' < 28'	E5	12' < 21'	D4.5
28'-40'	F5	21' < 28'	E5
		28' < 35'	E3
		35'-40'	F5
SIZE: 6' x 8'			
≥0.5' < 6'	C6.5	≥0.5' < 6'	B5.5
6' < 13'	D7	6' < 11'	C6.5
13' < 22'	E5	11' < 17'	C3.5
22' < 35'	F5	17' < 22'	D4.5
35'-40'	G5	22' < 32'	E5
		32'-40'	E3
SIZE: 6' x 9'			
≥0.5' < 8'	D7	≥0.5' < 8'	B5.5
8' < 14'	E5	8' < 14'	C6.5
14' < 24'	F5	14' < 21'	C3.5
24'-34'	G5	21' < 25'	D4.5
		25'-34'	E5
SIZE: 6' x UNLIMITED			
≥0.5' < 8'	D7	≥0.5' < 8'	B5.5
8' < 14'	E5	8' < 14'	C6.5
14' < 24'	F5	14' < 21'	C3.5
24'-34'	G5	21' < 25'	D4.5
		25'-34'	E5
SIZE: 7' x 7'			
≥0.5' < 8'	C6.5	≥0.5' < 4'	C6.5
8' < 15'	D7	4' < 7'	C3.5
15' < 26'	E5	7' < 11'	D4.5
26'-40'	F5	11' < 22'	E3
		22' < 32'	F3.5
		32'-40'	G3.5
SIZE: 7' x 8'			
≥0.5' < 5'	C6.5	≥0.5' < 5'	C6.5
5' < 11'	D7	5' < 8'	C3.5
11' < 19'	E5	8' < 13'	D4.5
19' < 30'	F5	13' < 22'	E3
30'-40'	G5	22' < 30'	F3.5
		30'-40'	G3.5
SIZE: 7' x 9'			
≥0.5' < 9'	D7	≥0.5' < 7'	C6.5
9' < 15'	E5	7' < 10'	C3.5
15' < 25'	F5	10' < 14'	D4.5
25' - 34'	G5	14' < 21'	E5
		21' < 29'	F5
		29'-34'	F3.5

SHORT-WAY		LONG-WAY	
SLAB DEPTH	SCHEDULE (Bars A)	SLAB DEPTH	SCHEDULE (Bars B)
SIZE: 8' x 8'			
≥0.5' < 10'	D7	≥0.5' < 9'	D4.5
10' < 19'	E5	9' < 13'	E5
19'-30'	F5	13' < 18'	F5
		18' < 23'	F3.5
		23'-30'	G3.5
SIZE: 8' x 9'			
≥0.5' < 8'	D7	≥0.5' < 7'	D7
8' < 14'	E5	7' < 9'	D4.5
14' < 23'	F5	9' < 15'	E3
23'-31'	G3.5	15' < 20'	F5
		20' < 23'	F3.5
		23'-31'	G3.5
SIZE: 9' x 9'			
≥0.5' < 8'	D7	≥0.5' < 7'	D4
8' < 14'	E5	7' < 10'	E5
14' < 22'	F5	10' < 17'	F3.5
		17' < 22'	G3.5
SIZE: 9'x9'x10" SLAB THICKNESS			
22' < 36'	F5	22' < 31'	F3.5
36'-40'	G5	31'-40'	G3.5
SIZE: 10'x10'x10" SLAB THICKNESS			
≥0.5' < 7'	C6.5	0.5' < 6'	C6.5
7' < 10'	D7	6' < 9'	D4.5
10' < 18'	E5	9' < 15'	E5
18' < 27'	F5	15' < 22'	F5
27'-32'	G5	22'-32'	G3.5
SIZE: 12'x12'x12" SLAB THICKNESS			
≥0.5' < 10'	D7	≥0.5' < 8'	D7
10' < 16'	E5	8' < 14'	E5
16' < 25'	F5	14' < 22'	F5
25'-35'	G5	22' < 30'	G5
		30'-35'	H4

TABLE 6 - SLAB DESIGNS ROUND STRUCTURES

SLAB DEPTH	SLAB THICKNESS	REINF. (2-WAY) SCHEDULE
SIZE: 3'-6" DIAMETER		
2'-15'	6" Precast	C6.5
0.5' < 30'	8"	A6
30'-40'	8"	B5.5
SIZE: 4'-0" DIAMETER		
≥0.5' < 19'	8"	A6
19' < 30'	8"	B5.5
30'-40'	8"	C6.5
SIZE: 5'-0" DIAMETER		
≥0.5' < 15'	8"	B5.5
15' < 26'	8"	C6.5
26' < 35'	8"	D7
35'-40'	8"	D4.5
SIZE: 6'-0" DIAMETER		
≥0.5' < 9'	8"	B5.5
9' < 15'	8"	C6.5
15' < 22'	8"	C3.5
22' < 30'	8"	D4.5
30'-40'	8"	E5
SIZE: 7'-0" DIAMETER		
≥0.5' < 8'	8"	C3.5
8' < 16'	8"	D4.5
16' < 23'	8"	E5
23' < 27'	8"	E3
27'-40'	8"	F3.5
SIZE: 8'-0" DIAMETER		
≥0.5' < 10'	8"	D4.5
10' < 16'	8"	E5
16' < 19'	8"	E3
19' < 29'	8"	F3.5
29'-40'	10"	F5
SIZE: 10'-0" DIAMETER		
≥0.5' < 12'	10"	D4.5
12' < 20'	10"	E5
20' < 28'	10"	F5
28'-40'	10"	G3.5
SIZE: 12'-0" DIAMETER		
≥0.5' < 8'	10"	D4.5
8' < 13'	10"	E5
13' < 18'	10"	F5
18' < 26'	10"	G3.5
26'-40'	12"	G3.5

SLAB AND WALL DESIGN TABLE NOTES

1. Size is the inside dimension(s) of a structure.
2. Slab reinforcement is appropriate for top, intermediate, and bottom slabs.
3. Bottom Slabs for precast 3'-6" x 3'-6" rectangular structures at 15' depth or less, may be 6" thick.
4. Slab depth is measured from finished grade to top of slab.
5. Reinforcing schedules with larger areas of steel may be substituted for schedules with smaller bar or wire spacing, except that Schedule B10 may not be substituted for Schedule A6. See Index 425-001 for allowable bar spacing adjustments when larger areas of reinforcing are substituted.

9/21/2021 1:45:55 PM

TABLES 5 AND 6

GENERAL NOTES:

1. Work this Index with Index 425-001 and Index 425-010.

2. Conform finished grade and slope of the Inlet Tops to the finished cross slope and grade of the adjacent sidewalk and/or border.

3. Provide 1¼" minimum cover for steel in the Inlet Top.

4. Construction of Inlet Tops are either precast or cast-in-place.

5. For precast units, the rear wall and apron may be precast as a separate piece from the top slab. Provide a minimum of 7 ~ #4 dowels, otherwise install in accordance with Index 425-001 "OPTIONAL CONSTRUCTION JOINTS".

6. These inlets are designed for use with standard curb and gutter Type E and Type F.

7. Use only round concrete support posts.

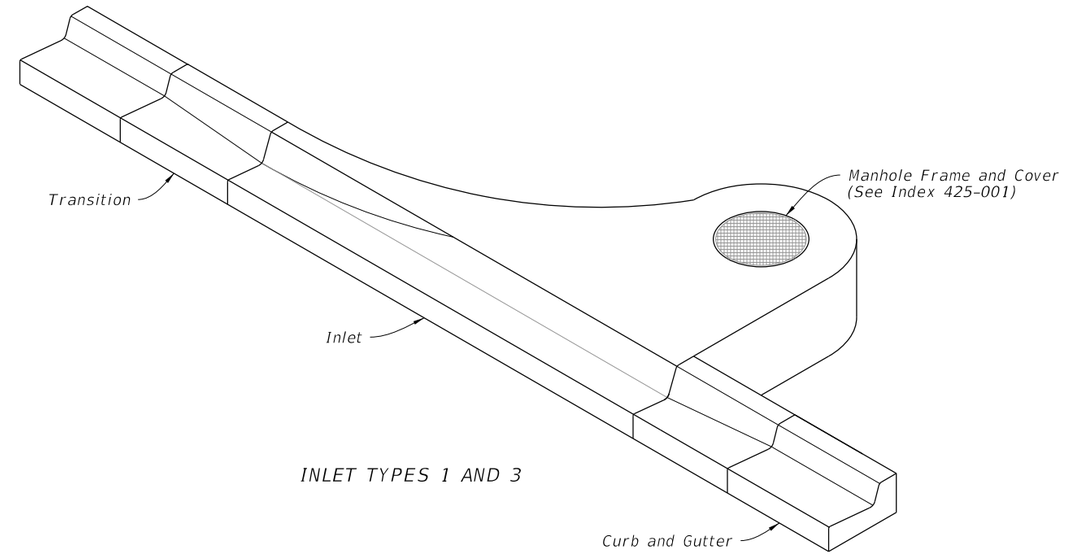

INLET TYPES 1 AND 3

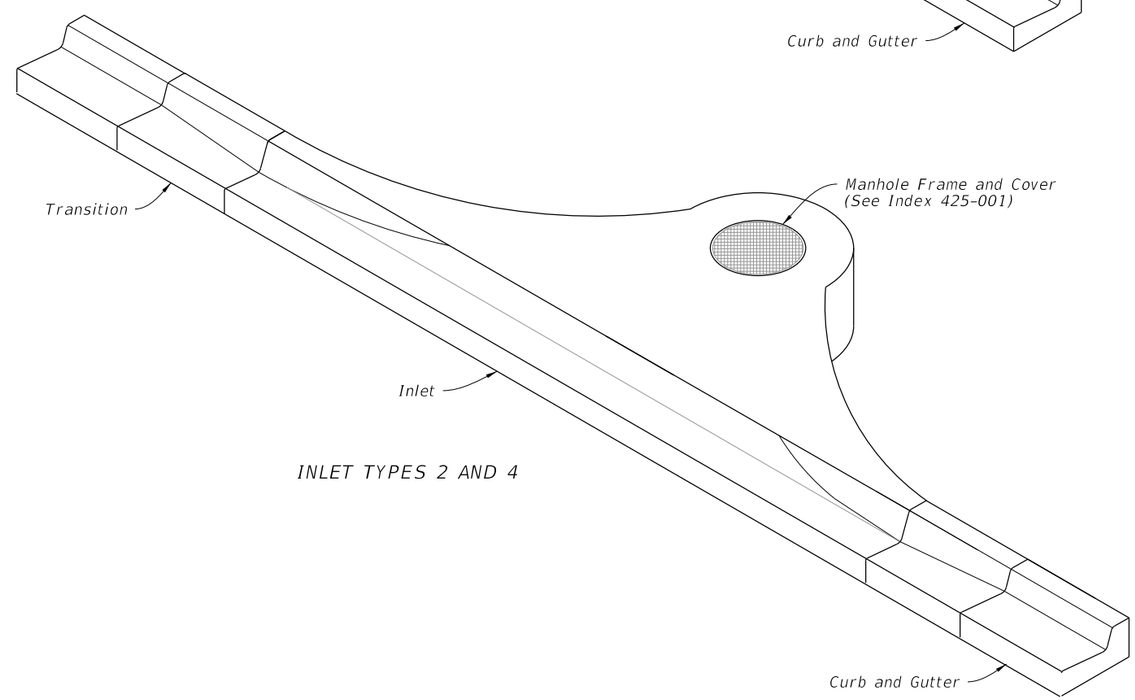

INLET TYPES 2 AND 4

CURB INLET TOPS

TABLE OF CONTENTS:

Sheet	Description
1	General Notes and Contents
2	Top Dimensional and Reinforcing Details
3	Transverse Dimensional and Reinforcing Details

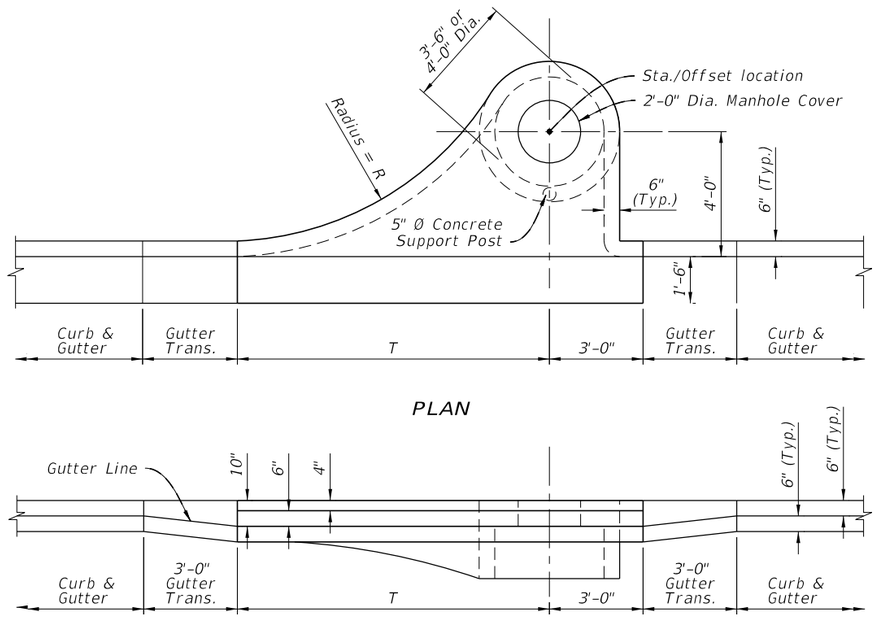

ELEVATION

TYPE 1 AND 3

TABLE 1 INLET DIMENSIONS		
Inlet Type	R	T
1	10'-0"	10'-0"
2	10'-0"	10'-0"
3	6'-0"	6'-0"
4	6'-0"	6'-0"

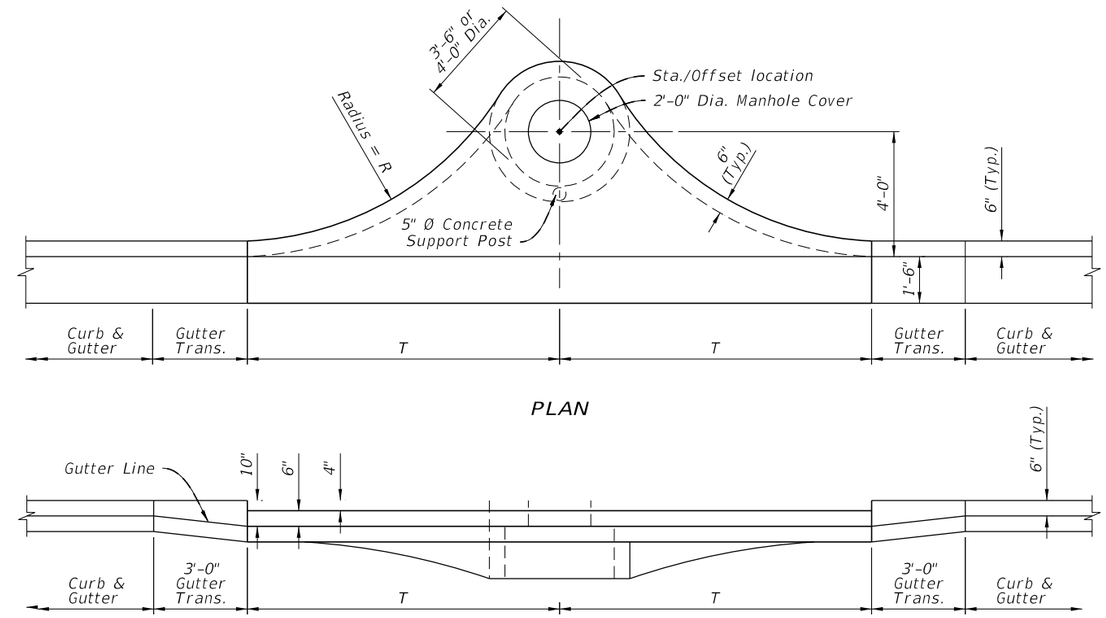

ELEVATION

TYPE 2 AND 4

TOP DIMENSIONAL DETAILS

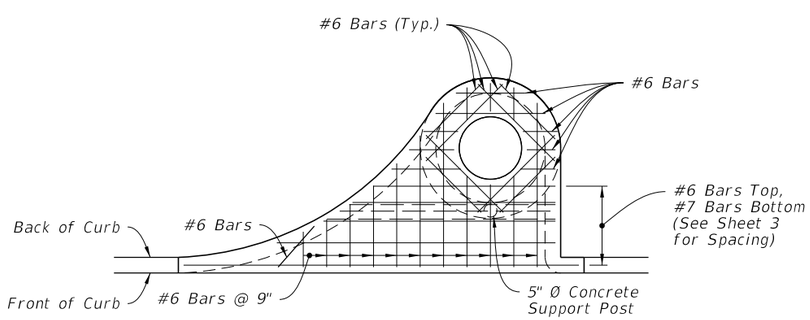

PLAN

TYPE 1 AND 3

NOTE:
For transverse section reinforcement, see Sheet 3.

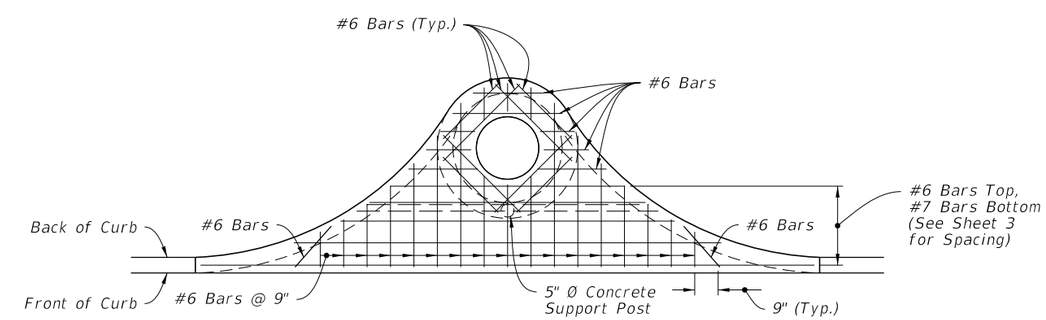

PLAN

TYPE 2 AND 4

TOP REINFORCING DETAILS

TOP DIMENSIONAL AND TOP REINFORCING DETAILS

LAST REVISION	REVISION	DESCRIPTION:			INDEX	SHEET
11/01/20			FY 2022-23 STANDARD PLANS	CURB INLET TOP TYPES 1, 2, 3, AND 4	425-020	2 of 3

9/21/2021 1:45:56 PM

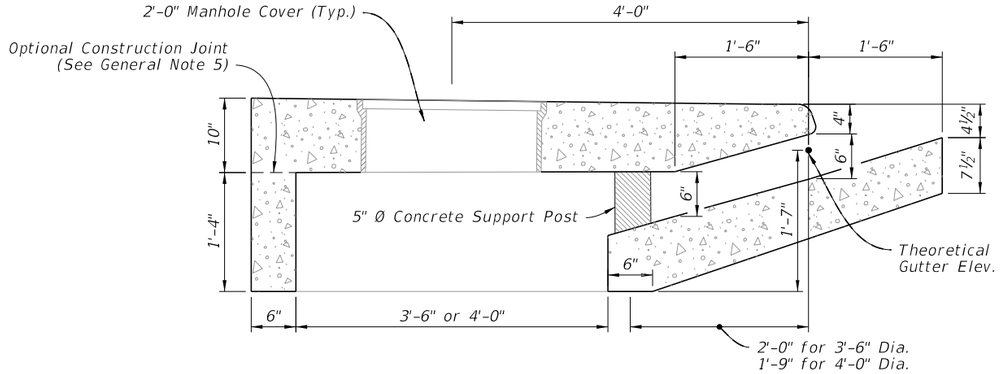

INLET SECTION WITH TYPE F CURB AND GUTTER

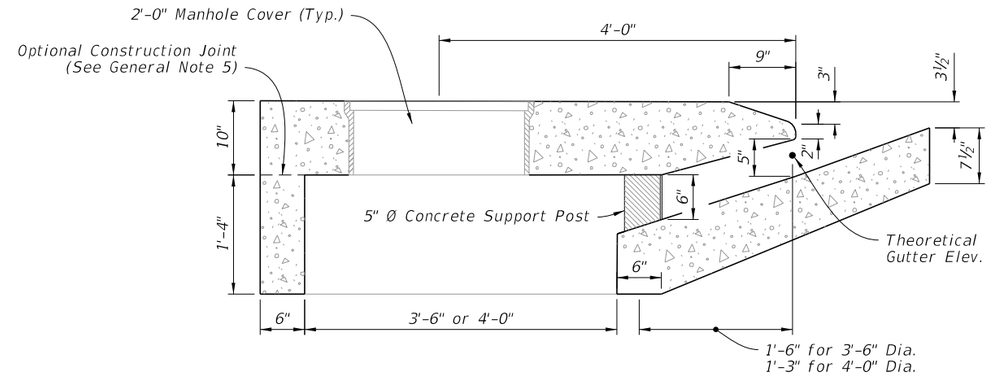

INLET SECTION WITH TYPE E CURB AND GUTTER

TRANSVERSE DIMENSIONAL DETAILS

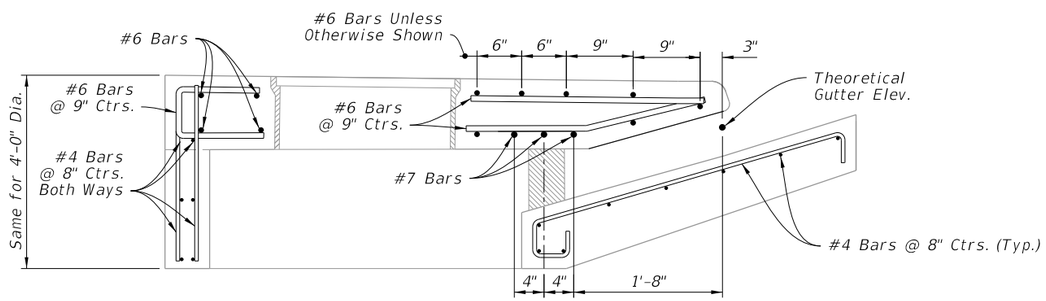

3'-6" DIA. STRUCTURE BOTTOM

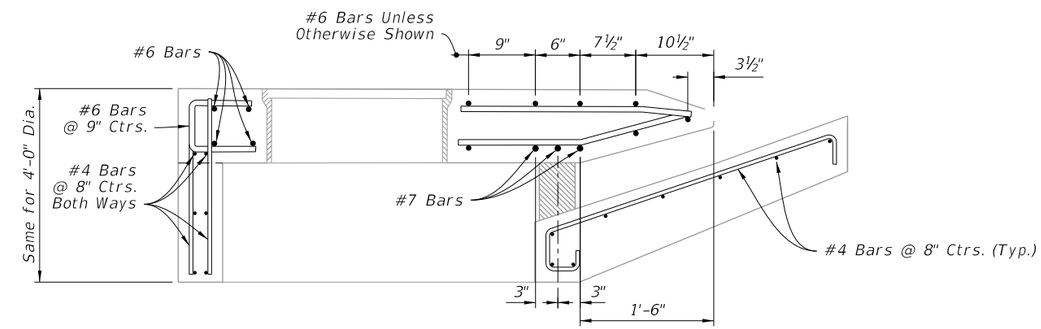

3'-6" DIA. STRUCTURE BOTTOM

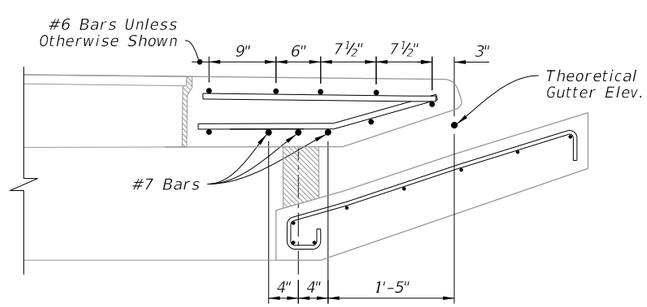

4'-0" DIA. STRUCTURE BOTTOM

INLET SECTION WITH TYPE F CURB AND GUTTER

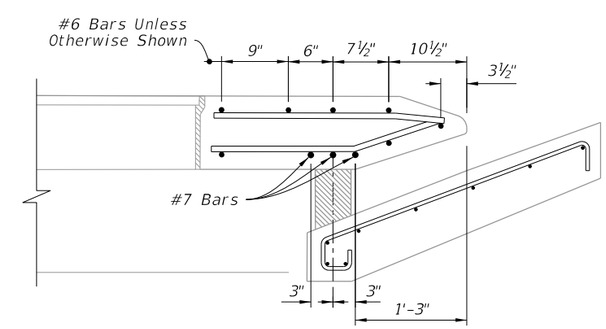

4'-0" DIA. STRUCTURE BOTTOM

INLET SECTION WITH TYPE E CURB AND GUTTER

TRANSVERSE REINFORCING DETAILS

TRANSVERSE DIMENSIONAL AND REINFORCING DETAILS

LAST REVISION	REVISION	DESCRIPTION:				INDEX	SHEET
11/01/20			FDOT	FY 2022-23 STANDARD PLANS	CURB INLET TOP TYPES 1, 2, 3, AND 4	425-020	3 of 3

9/21/2021 1:45:57 PM

GENERAL NOTES:

1. Work this Index with Index 425-001 and Index 425-010.

2. Conform the finished grade and slope of the inlet tops with the finished cross slope and grade of the proposed sidewalk and/or border.

3. For inlets constructed on a curve, refer to the plans to determine the radius. Bend steel when necessary.

4. Use Grade 60 reinforcing bars with 1¼" minimum cover unless otherwise shown, see Sheet 6 for equivalent area Welded Wire Reinforcement details.

5. Inlet tops may be either cast-in-place or precast concrete. Conform precast units to the dimensions shown or in accordance with approved shop drawings.

6. Corner fillets are required at inlet opening for precast units or C-I-P units used in conjunction with circular inlet bottoms or skewed rectangular inlet boxes. Finish top of fillets flush with drain throat bottom and match slope.

7. For Type E curb and gutter, transition the shape of the curb over the gutter transition length to match the face of the inlet (Type Ft).

8. Meet the requirements of ASTM A36/A36M with steel used for frames and grates.

9. Use either cast iron grates or steel grates.

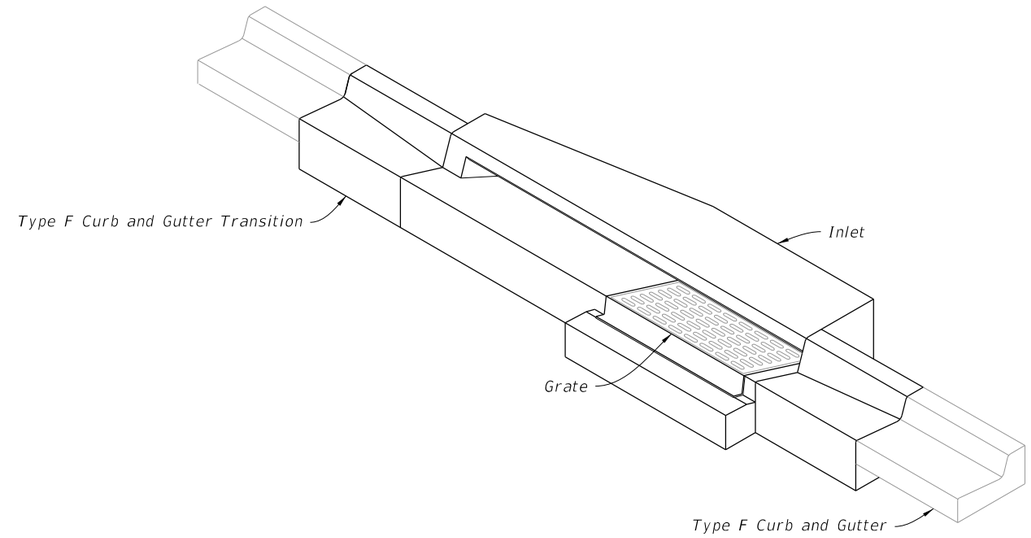

INLET TYPE 5
(Type F Curb and Gutter Shown)

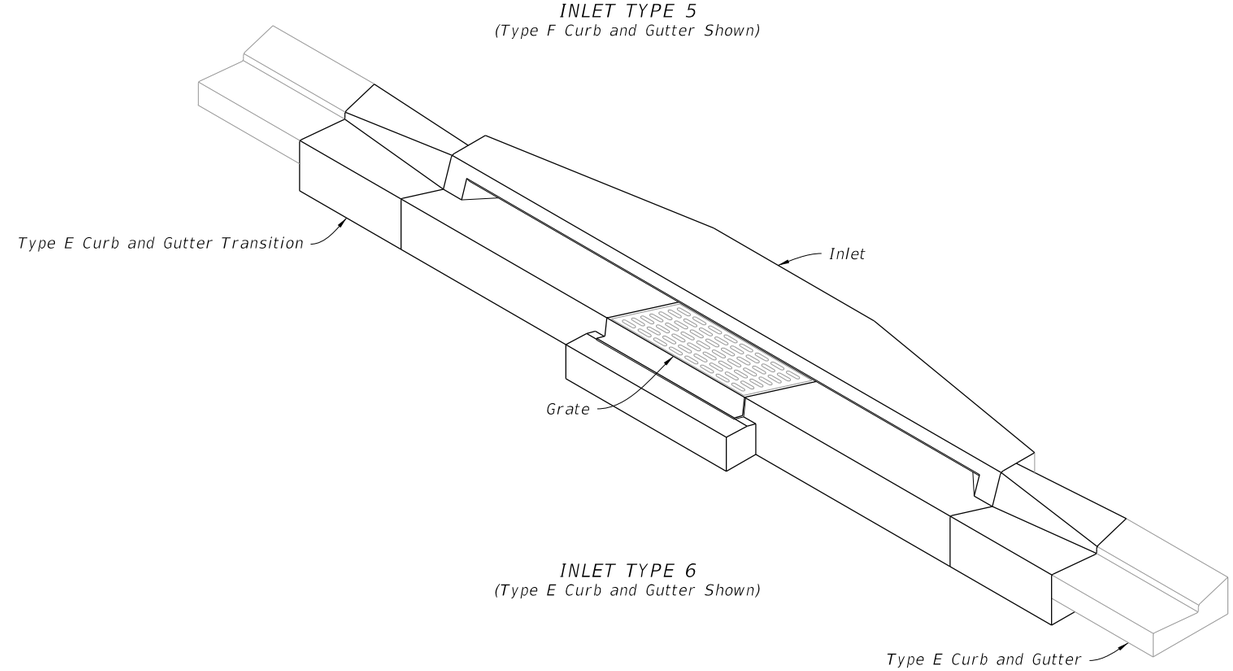

INLET TYPE 6
(Type E Curb and Gutter Shown)

TABLE OF CONTENTS:

Sheet	Description
1	General Notes and Contents
2	Type 5 and 6 Dimensional Details
3	Type 5 and 6 Reinforcing and Bar Bending Details
4	Precast Dimensional and Reinforcing Details
5	Cast-In-Place Dimensional and Reinforcing Details
6	Alternate Welded Wire Reinforcing (WWR) Details
7	Grate, Anchor, and Grouting Details

CURB INLETS TOPS

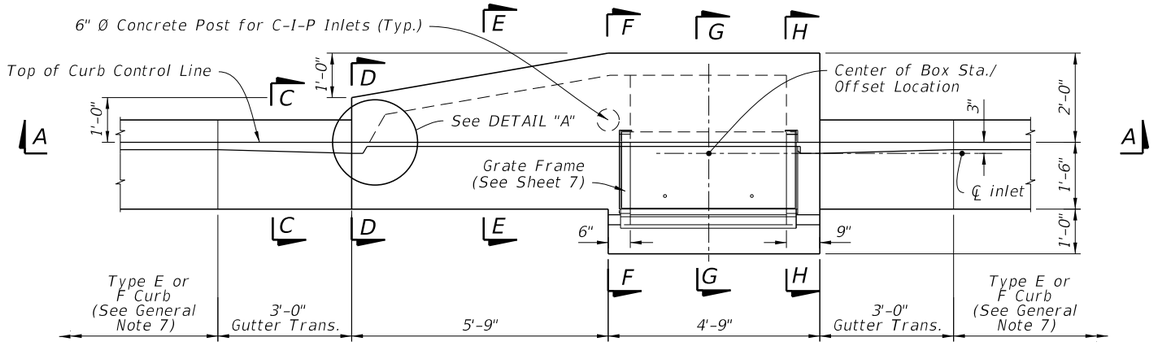

PLAN

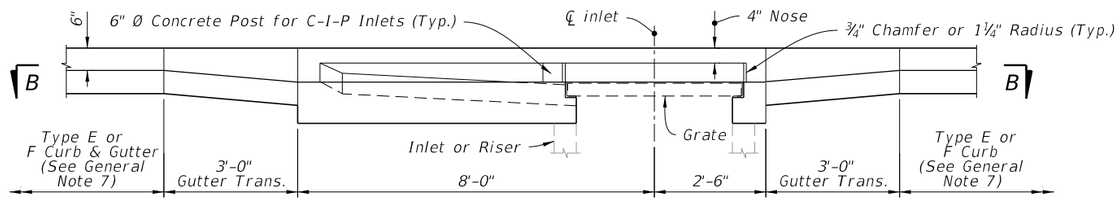

ELEVATION

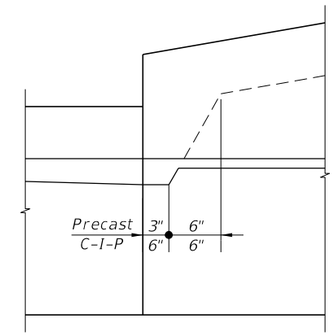

DETAIL "A"

TYPE 5 DIMENSIONAL DETAILS

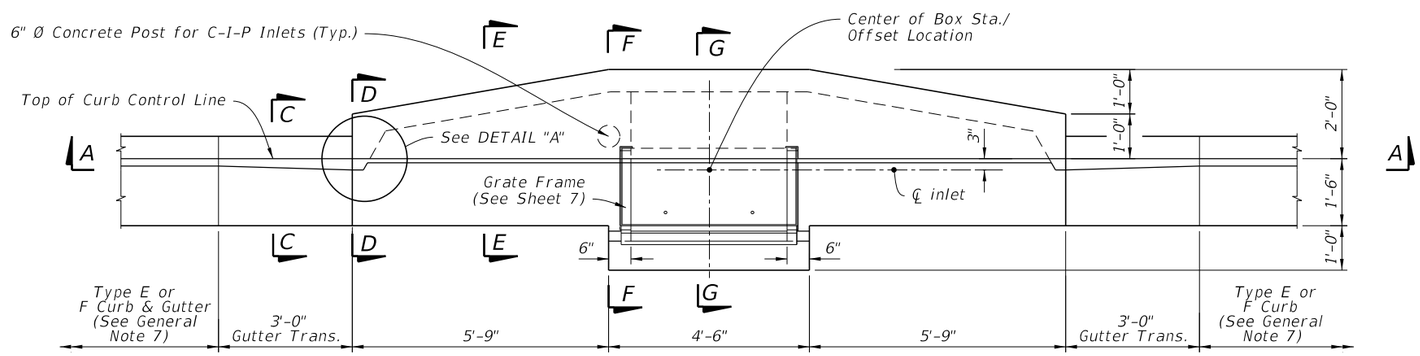

PLAN

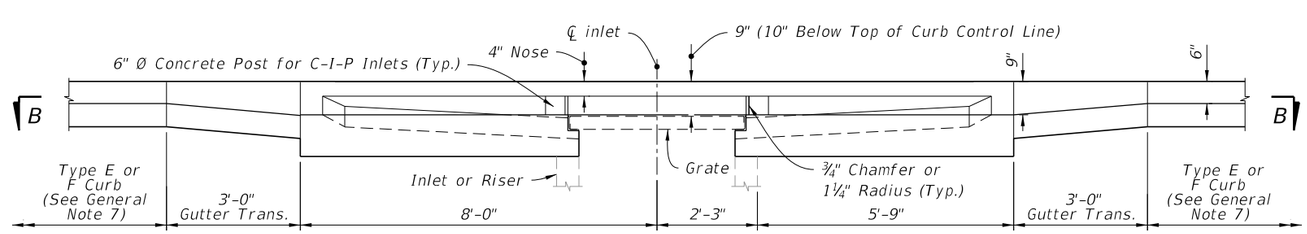

ELEVATION

TYPE 6 DIMENSIONAL DETAILS

TYPE 5 AND 6 DIMENSIONAL DETAILS

LAST REVISION	REVISION	DESCRIPTION:			INDEX	SHEET
11/01/20			FY 2022-23 STANDARD PLANS	CURB INLET TOP TYPES 5 AND 6	425-021	2 of 7

9/21/2021 1:45:58 PM

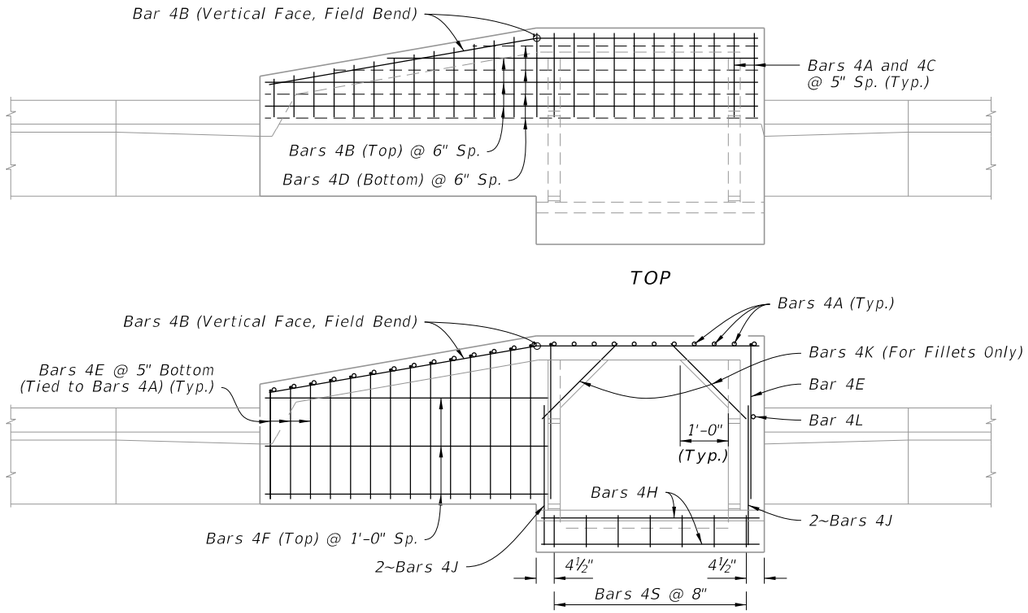

TYPE 5 REINFORCING DETAILS

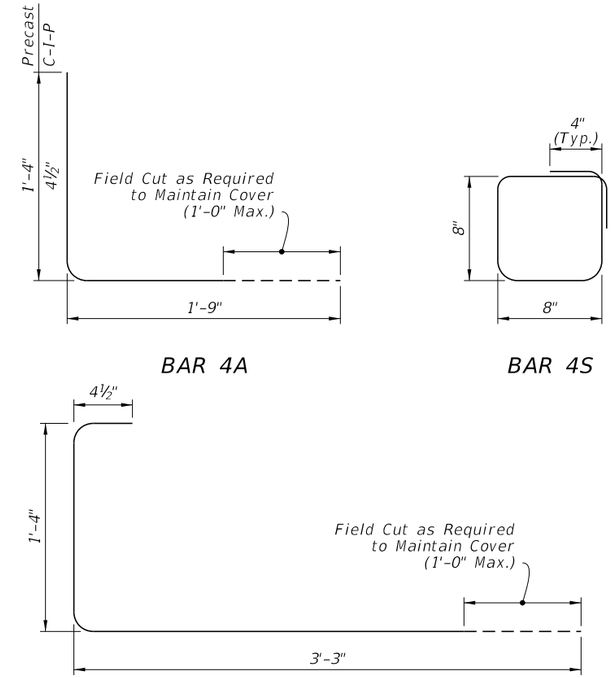

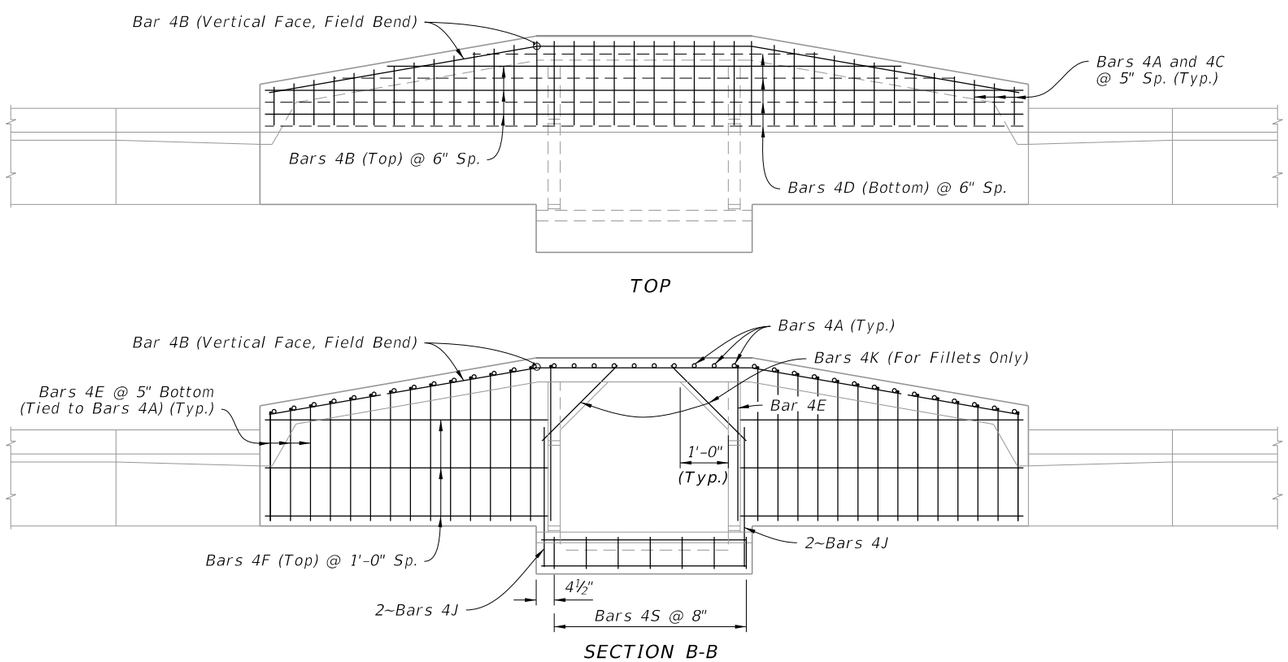

TYPE 6 REINFORCING DETAILS

BILL OF REINFORCING STEEL					
MARK	SIZE	TYPE 5 INLET		TYPE 6 INLET	
		NO.	LENGTH	NO.	LENGTH
A (Precast)	4	25	3'-1"	38	3'-1"
A (C-I-P)	4	25	2'-1½"	38	2'-1½"
B	4	6	10'-3"	6	15'-9"
C	4	25	11" to 1'-11"	38	11" to 1'-11"
D	4	4	10'-3"	4	15'-9"
E	4	16	4'-11½"	30	4'-11½"
F	4	3	6'-0"	6	6'-0"
H	4	4	4'-6"	4	4'-6"
J	4	4	3'-0"	4	3'-0"
K (Fillet)	4	2	2'-3"	2	2'-3"
L (Precast)	4	1	1'-4"	0	---
L (C-I-P)	4	10	1'-4"	9	1'-4"
S	4	7	3'-2"	7	3'-2"

NOTES:

1. All bar dimensions in the bending diagrams are out to out.
2. Bars 4A and 4E may be combined into a single bar.
3. Welded Wire Reinforcement consists of smooth or deformed wire meeting the requirements of Specification 931.

TYPE 5 AND 6 REINFORCING AND BAR BENDING DETAILS

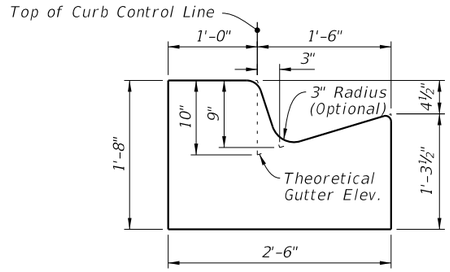

SECTION D-D

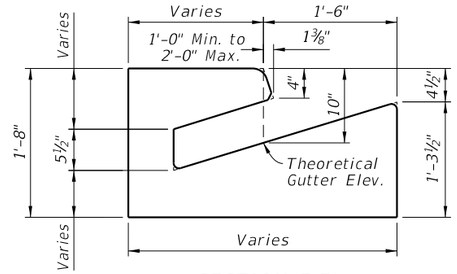

SECTION E-E

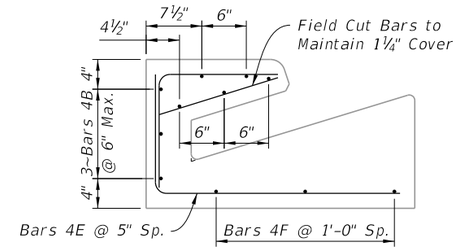

SECTION E-E

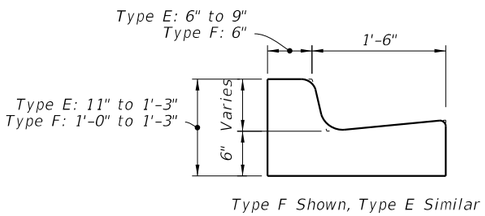

SECTION C-C

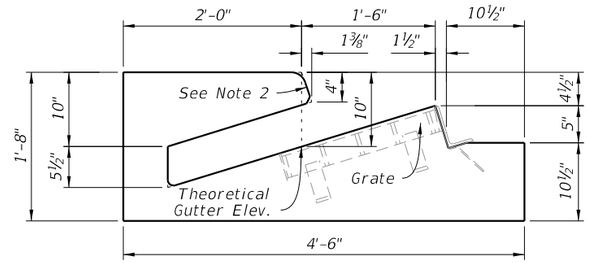

SECTION F-F

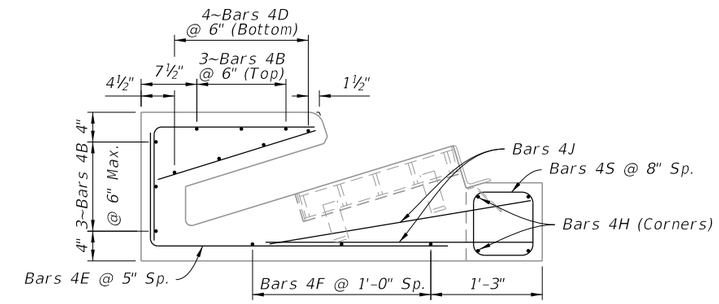

SECTION F-F

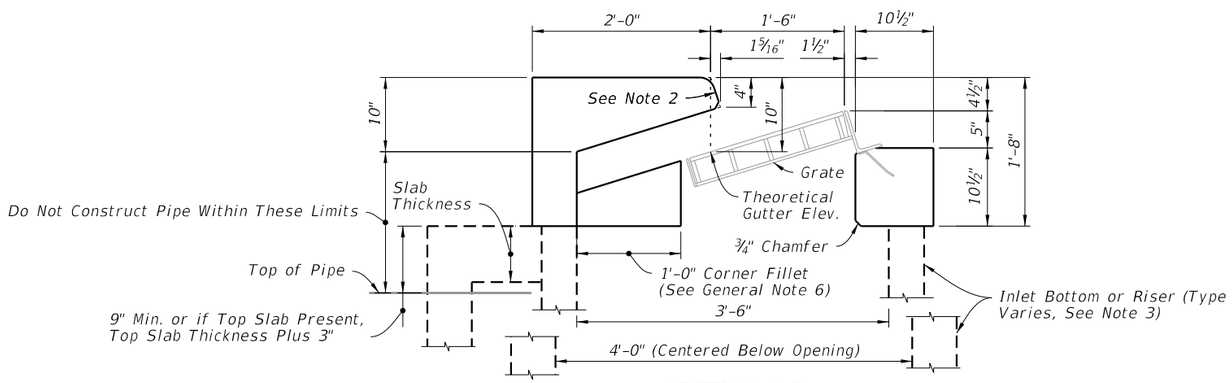

SECTION G-G

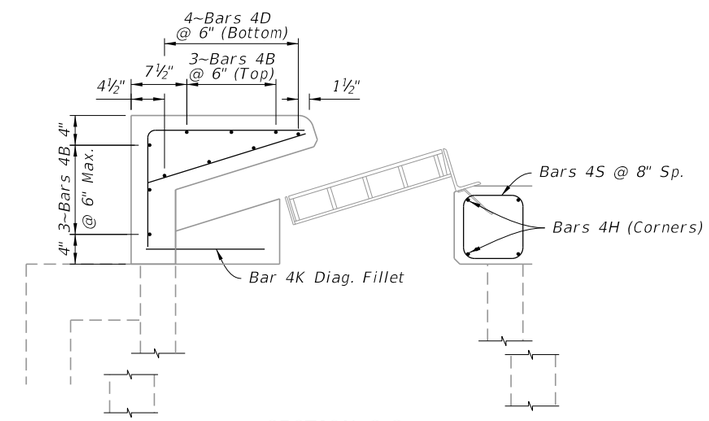

SECTION G-G

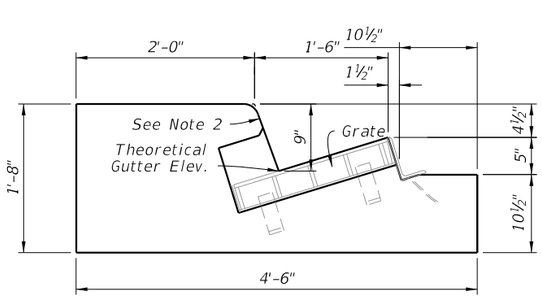

SECTION H-H

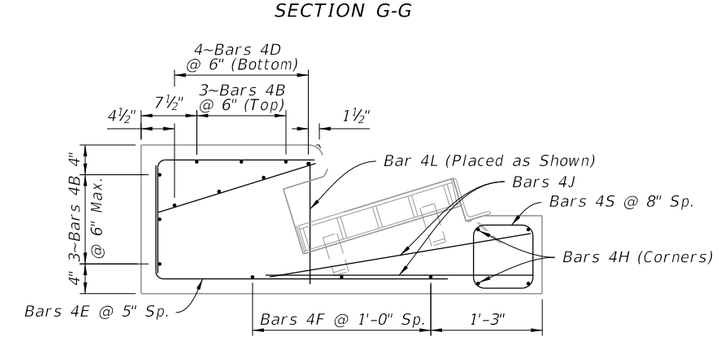

SECTION H-H

NOTES:

1. For location of Sections D-D thru H-H see Sheet 2.
2. Match slope of adjacent curb with 2" top radius and ¾" bottom chamfer of 1¼" radius.
3. See Plans for bottom and riser type.

DIMENSIONAL DETAILS

REINFORCING DETAILS

PRECAST DIMENSIONAL AND REINFORCING DETAILS

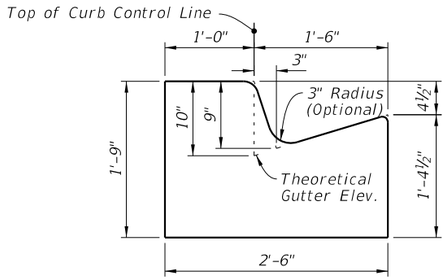

OPTION A

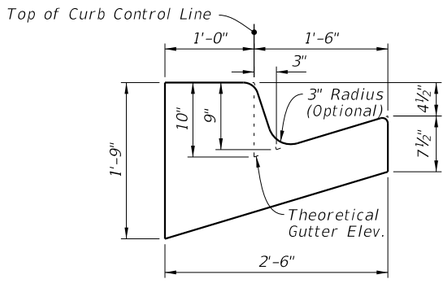

OPTION B

SECTION D-D

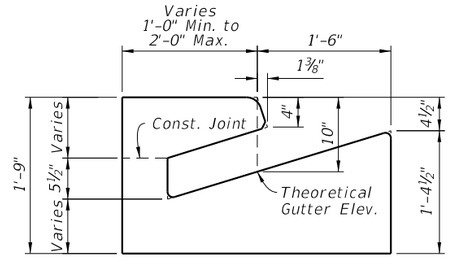

OPTION A

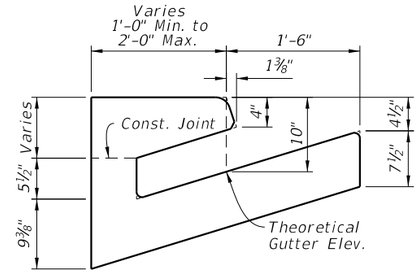

OPTION B

SECTION E-E

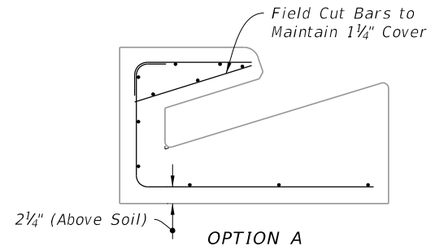

OPTION A

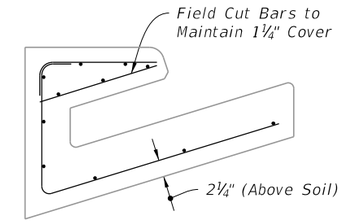

OPTION B

SECTION E-E

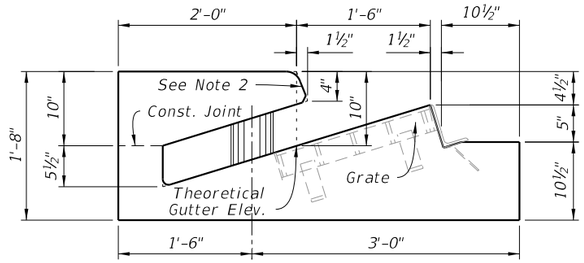

SECTION F-F

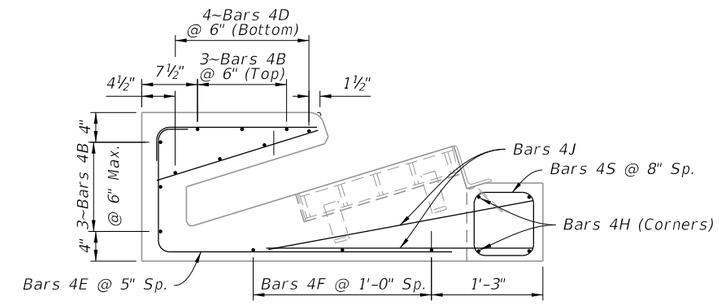

SECTION F-F

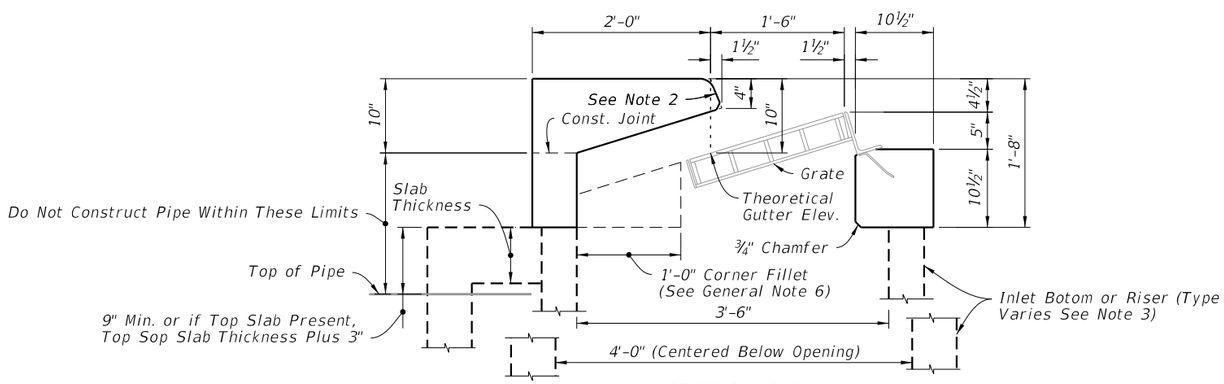

SECTION G-G

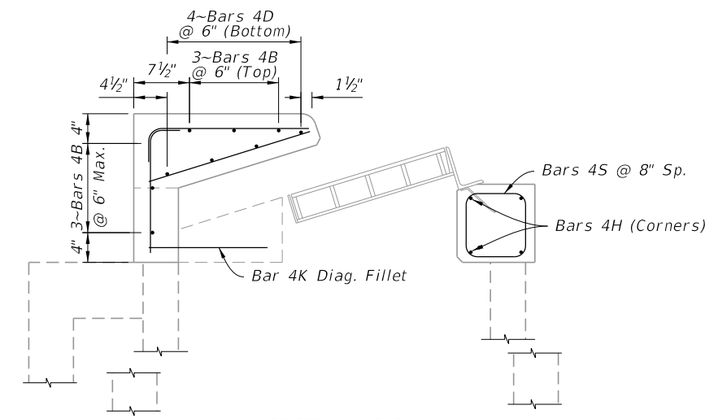

SECTION G-G

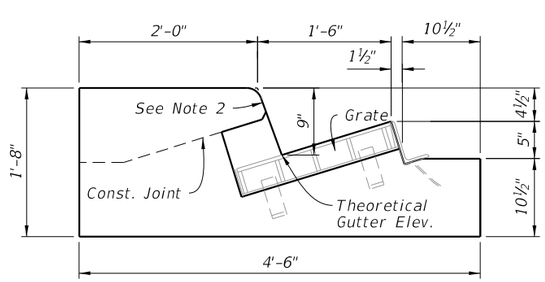

SECTION H-H

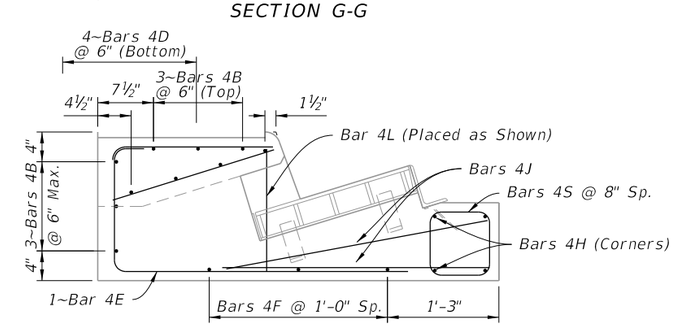

SECTION H-H

NOTES:

1. For location of Sections D-D thru H-H see Sheet 2.
2. Match slope of adjacent curb with 2" top radius and ¾" bottom chamfer or 1¼" radius.
3. See Plans for bottom and riser type.

DIMENSIONAL DETAILS

REINFORCING DETAILS

CAST-IN-PLACE DIMENSIONAL AND REINFORCING DETAILS

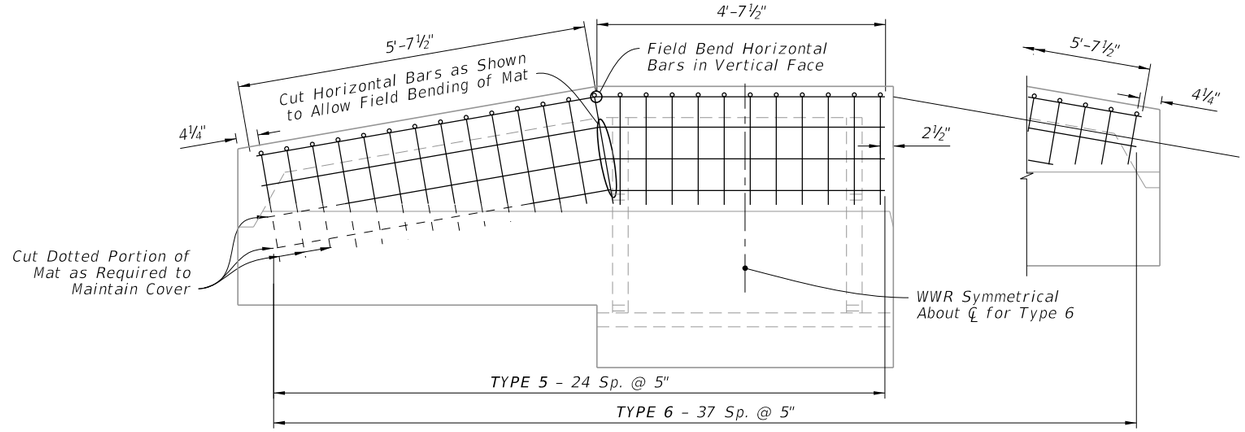

PIECE - 1 PLACEMENT SCHEMATIC

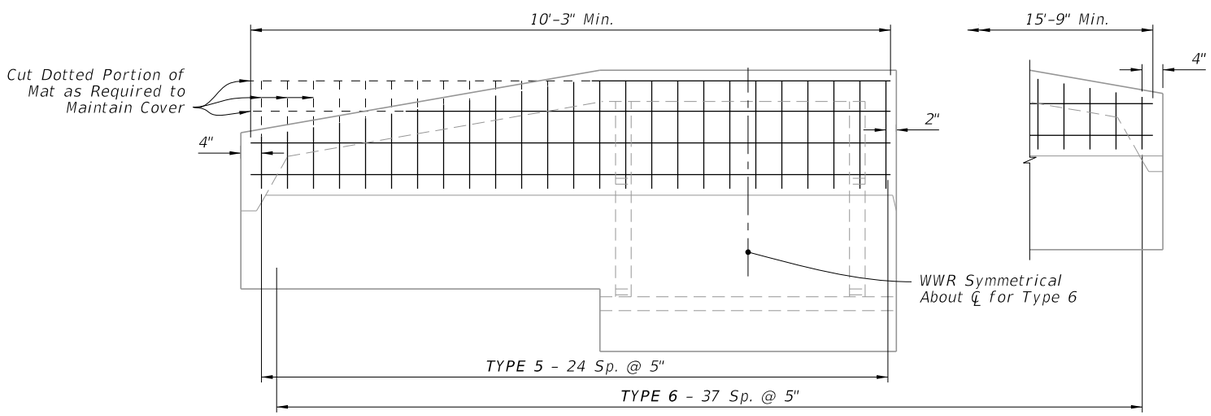

PIECE - 2 PLACEMENT SCHEMATIC

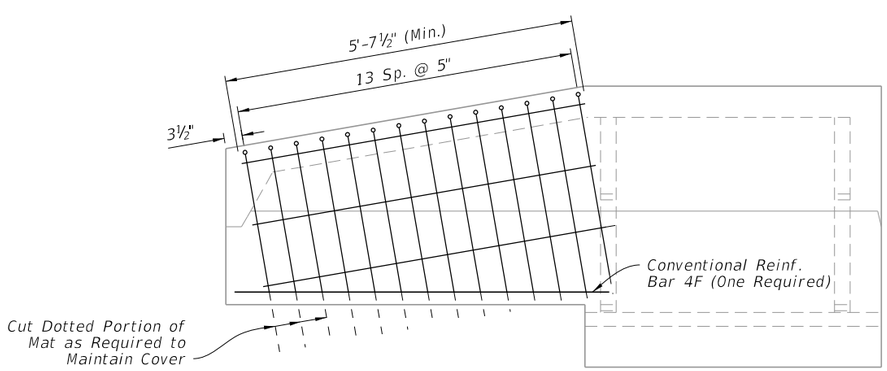

PIECE - 3 PLACEMENT SCHEMATIC

WWR REINFORCING DETAILS

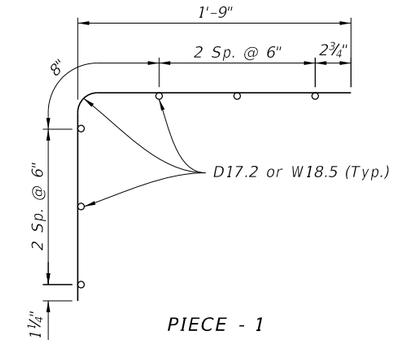

PIECE - 1

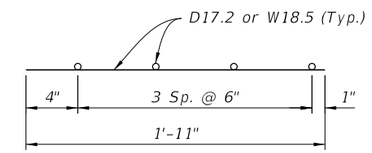

PIECE - 2

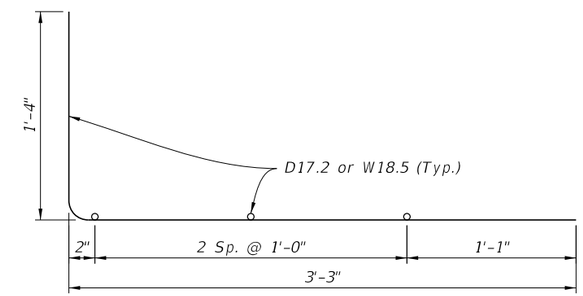

PIECE - 3

WELDED WIRE REINFORCING DETAILS

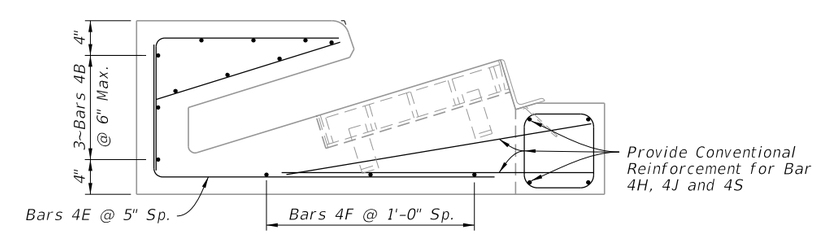

TYPICAL SECTION

NOTES:

1. All bar dimensions in the bending diagrams are out to out.

2. Welded Wire Reinforcement consists of Smooth or Deformed wire meeting the requirements of Specification 931.

ALTERNATE WELDED WIRE REINFORCING (WWR) DETAILS

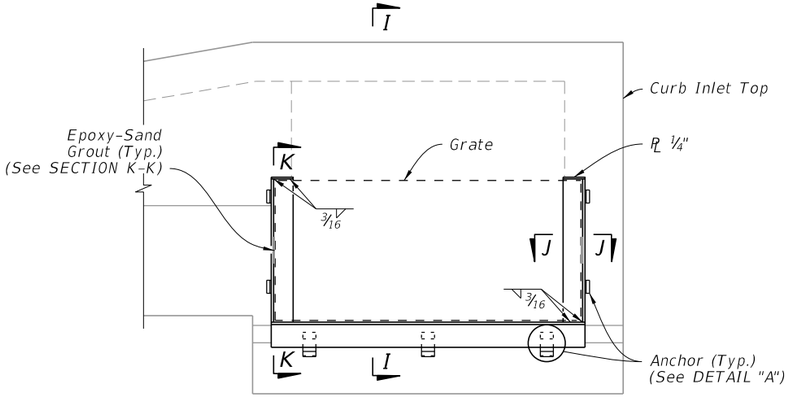

FRAME DETAIL

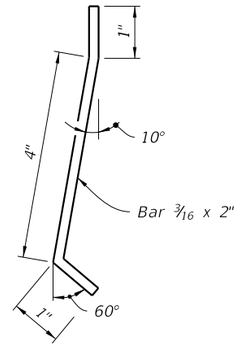

ANCHOR DETAIL "A"

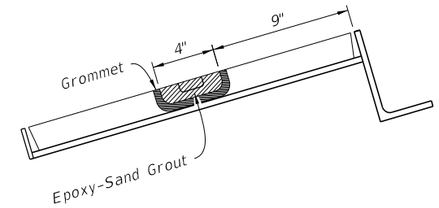

CAST IRON GRATE GROUTING DETAILS

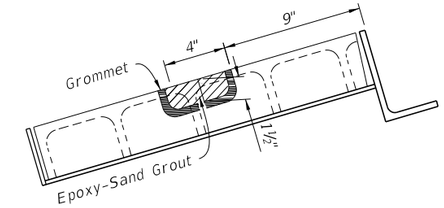

STEEL GRATE GROUTING DETAILS

SECTION K-K

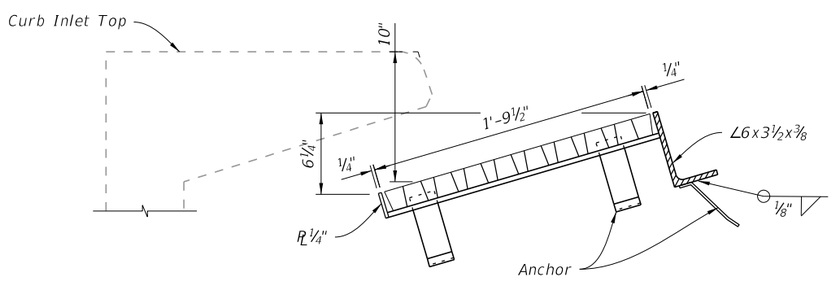

SECTION I-I

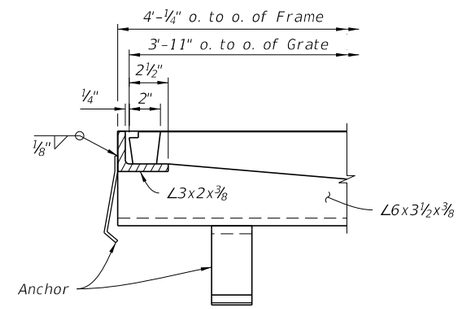

SECTION J-J

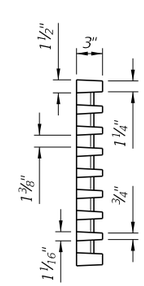

SECTION M-M

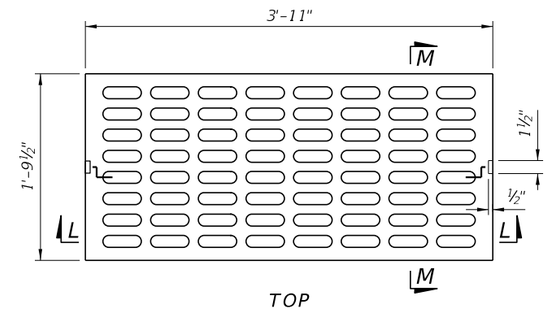

TOP

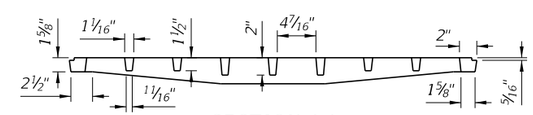

SECTION L-L

CAST IRON GRATE

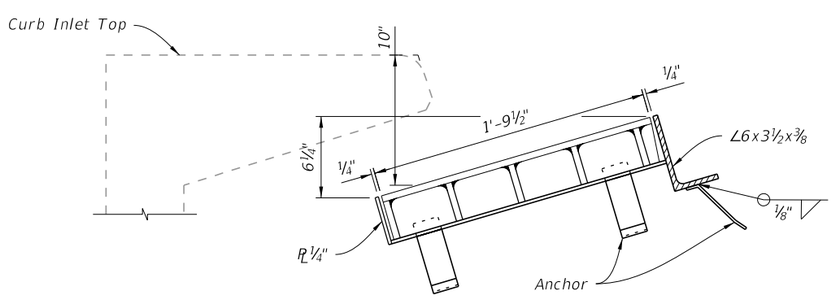

SECTION I-I

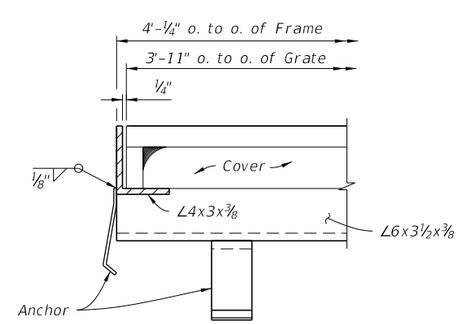

SECTION J-J

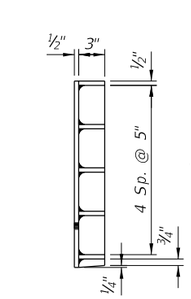

SECTION O-O

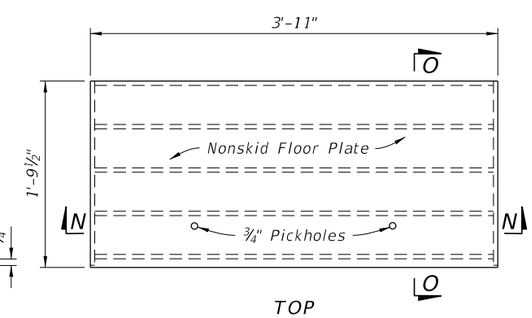

TOP

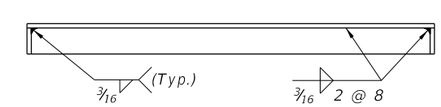

SECTION N-N

STEEL GRATE

GRATE, ANCHOR, AND GROUTING DETAILS

LAST REVISION	REVISION	DESCRIPTION:			INDEX	SHEET
11/01/20			FY 2022-23 STANDARD PLANS	CURB INLET TOP TYPES 5 AND 6	425-021	7 of 7

9/21/2021 1:46:04 PM

GENERAL NOTES:

1. Work this Index with Index 425-001 and Index 425-010.

2. Use Grade 60 reinforcing bars with 2" minimum cover unless otherwise shown. See Index 425-001 for equivalent area of welded wire fabric. Cut or bend bars out of way of pipe when necessary. Bars to clear pipe by 1½".

3. Recommended maximum pipe sizes are 24" longitudinal and 30" transverse. For larger pipe, inlets with Alt. B bottoms, Index 425-010 is recommended.

4. All dimensions are for both precast and cast-in-place inlets unless otherwise shown.

TABLE OF CONTENTS:

Sheet	Description
1	General Notes and Contents
2	Dimensional and Reinforcing Details

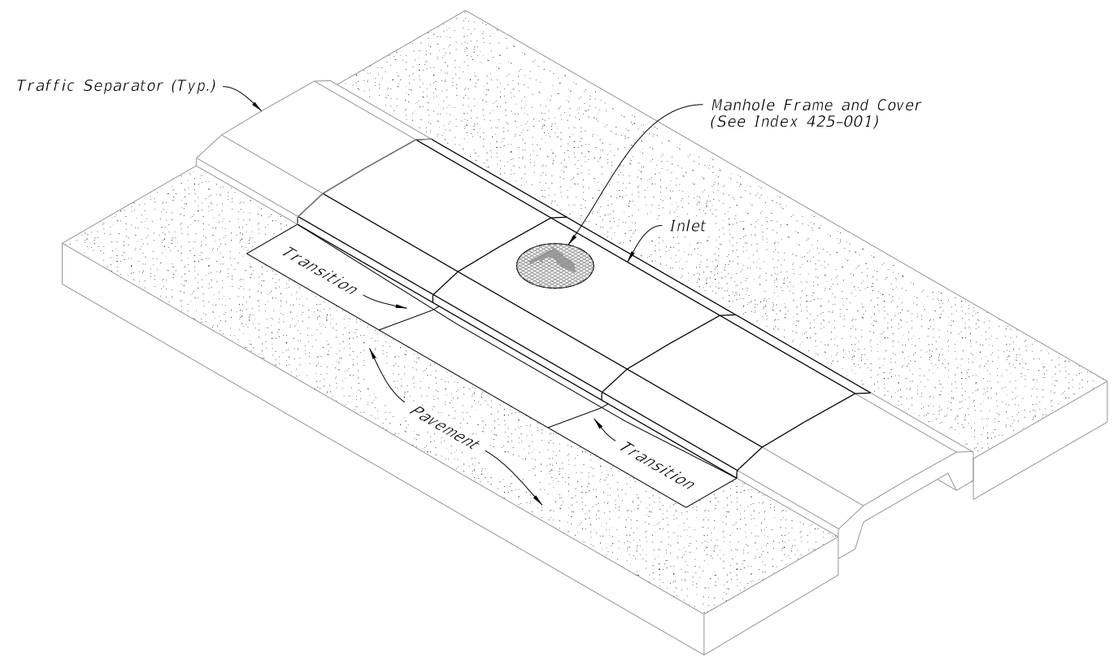

CURB INLET TYPE 7
(Bottom Not Shown)

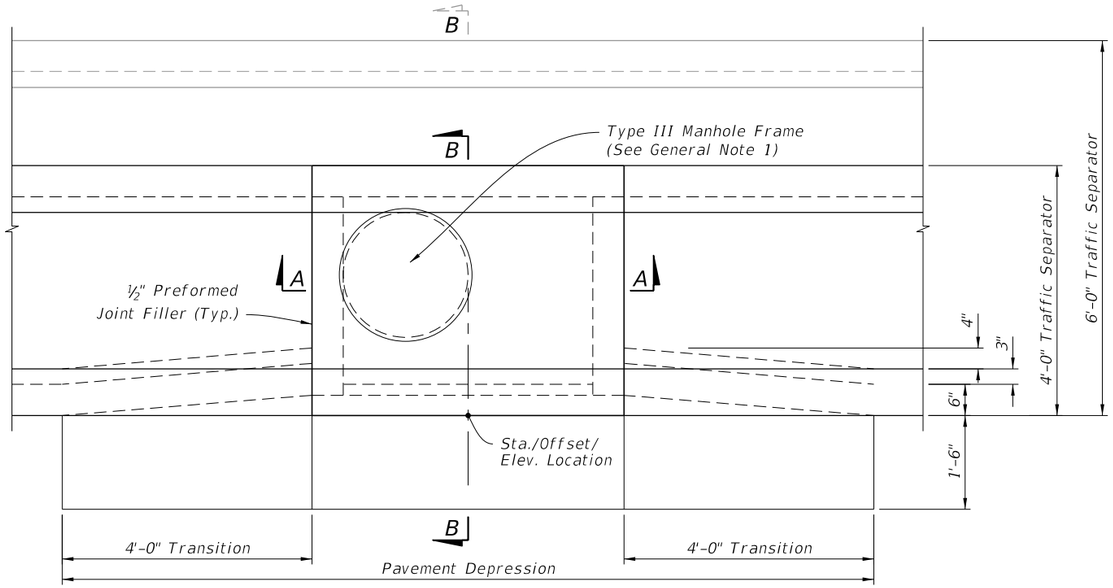

PLAN

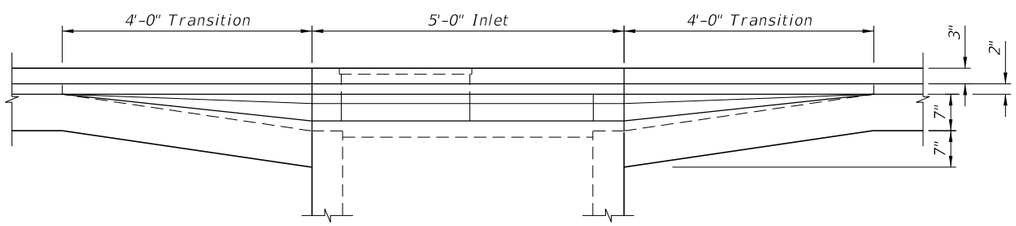

FRONT ELEVATION

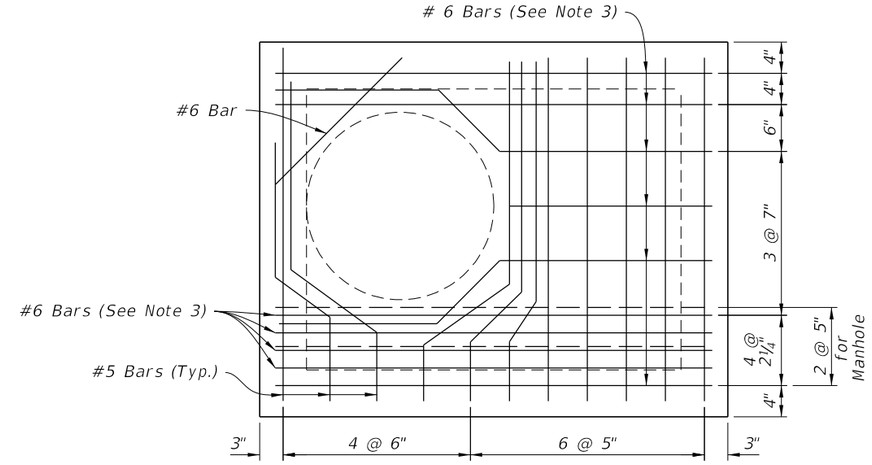

DETAIL "A"

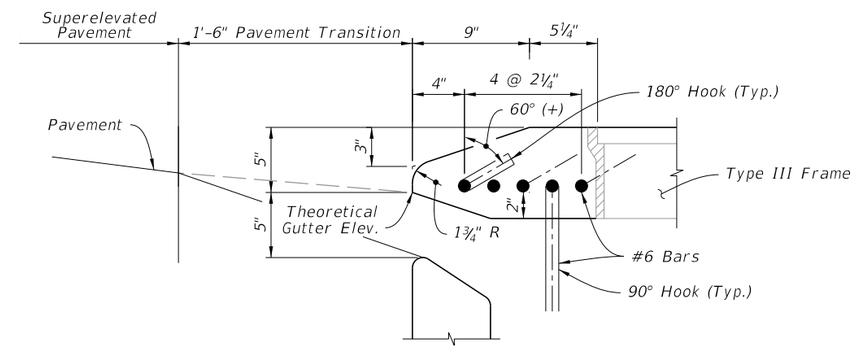

DETAIL "B"

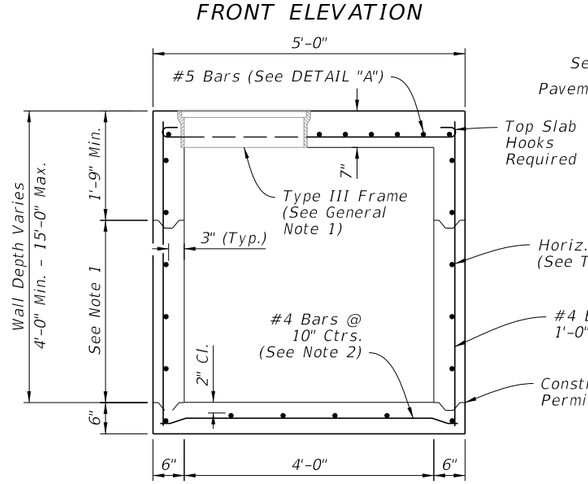

SECTION A-A

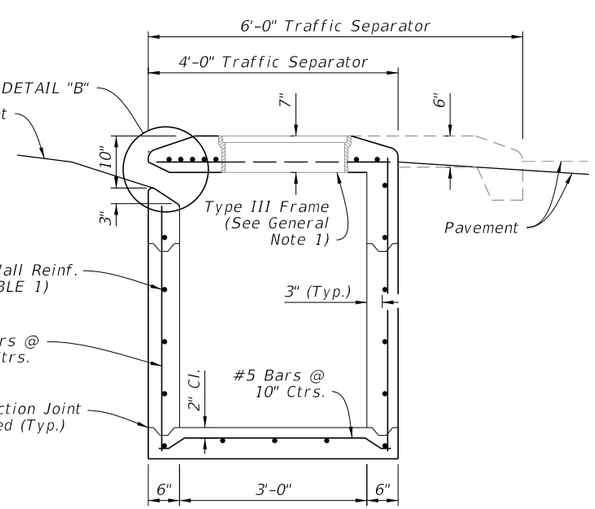

SECTION B-B

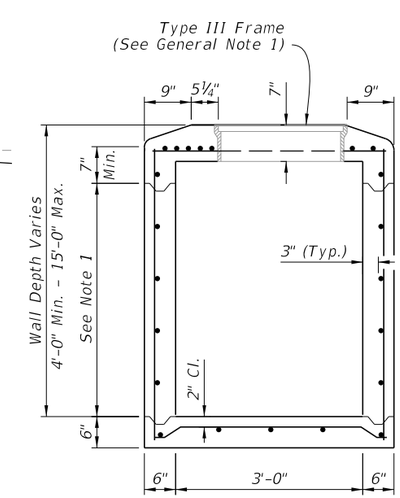

MANHOLE MODIFICATION

NOTES:

1. Construction joints permitted between these limits. See Index 425-001 for minimum dimensions.
2. For bottom slab rebar embedment options, see optional construction joints, Index 425-001.
3. ACI standard hooks required each end of straight bars and right end of bent bars: 180° hooks, canted 60°(+), on odd bars; 90° hooks, down, on even bars numbered from throat side.

TABLE 1 - HORIZONTAL WALL REINFORCING SCHEDULE

WALL DEPTH	SCHEDULE	AREA (in.²/ft.)	MAX. SPACING	
			BARS	WWR
0' - 6'	A12	0.20	12"	8"
6' - 10'	A6	0.20	6"	5"
10' - 13'	A4	0.20	4"	3"
10' - 15'	B5.5	0.24	5½"	5"

DIMENSIONAL AND REINFORCING DETAILS

GENERAL NOTES:

1. Work this Index with Index 425-001 and Index 425-010.

2. Use Grade 60 reinforcing bars with 2" minimum cover unless otherwise shown. See Index 425-001 for equivalent area of welded wire fabric. Cut or bend bars out of way of pipe when necessary. Bars to clear pipe by 1½".

3. Recommended maximum pipe sizes are 24" longitudinal and 30" transverse. For larger pipe, inlets with Alt. B bottoms, Index 425-010 is recommended.

4. All dimensions are for both precast and cast-in-place inlets unless otherwise shown.

TABLE OF CONTENTS:

Sheet	Description
1	General Notes and Contents
2	Dimensional and Reinforcing Details

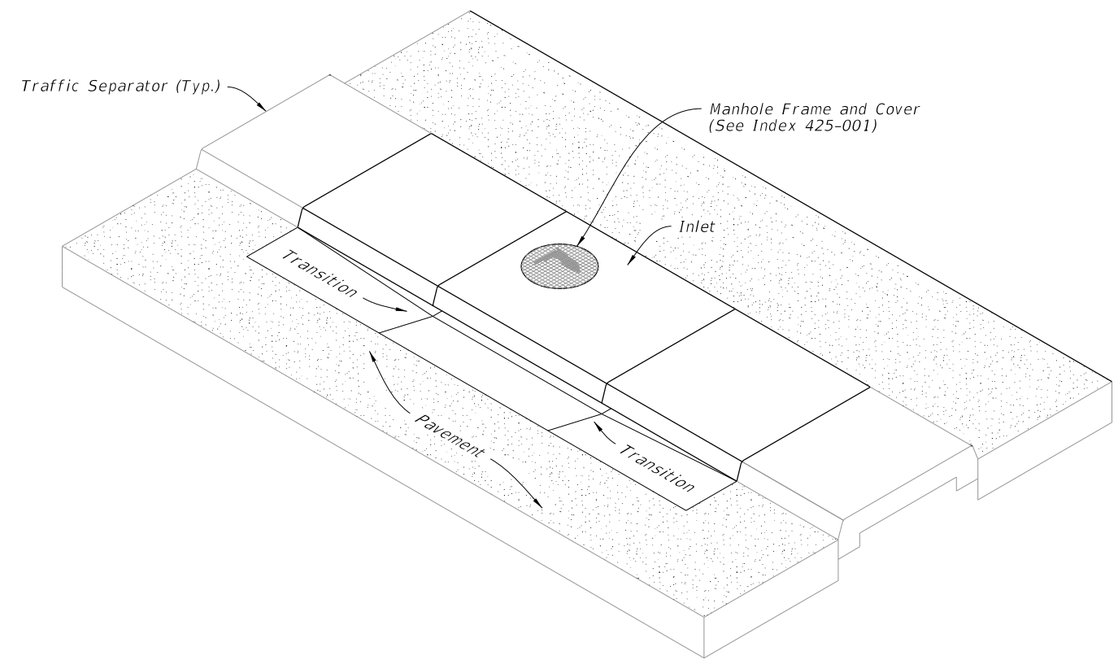

CURB INLET TYPE 8
(Bottom Not Shown)

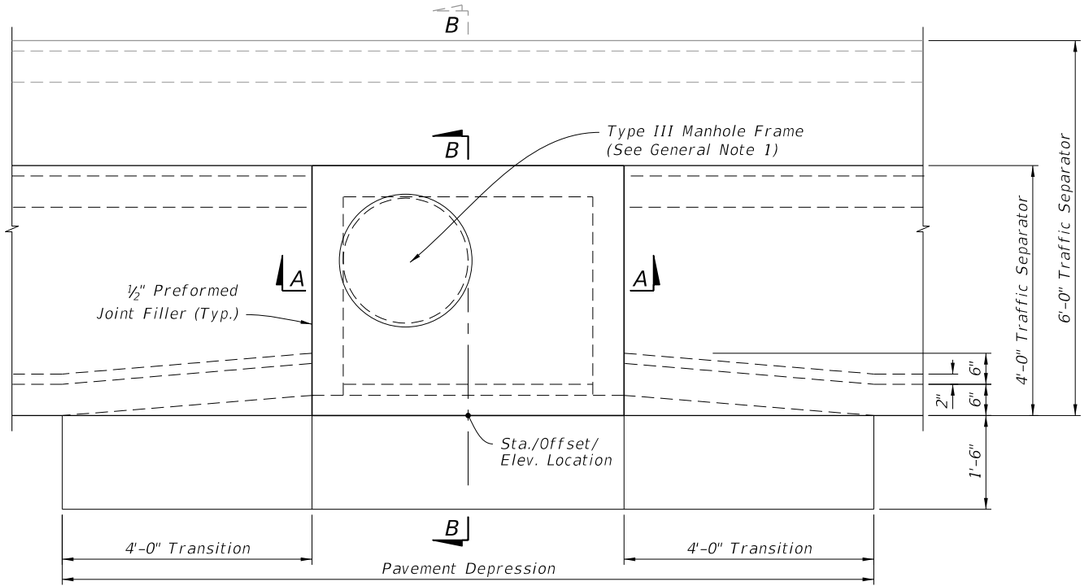

PLAN

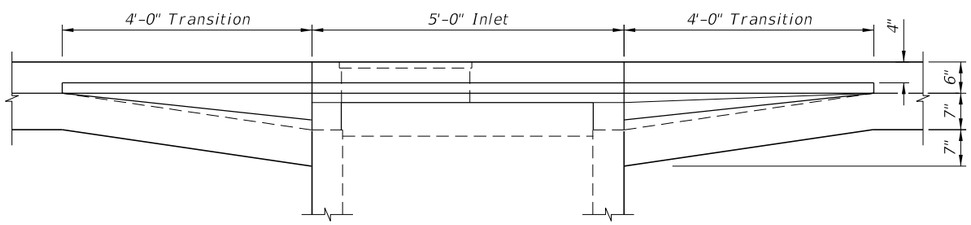

FRONT ELEVATION

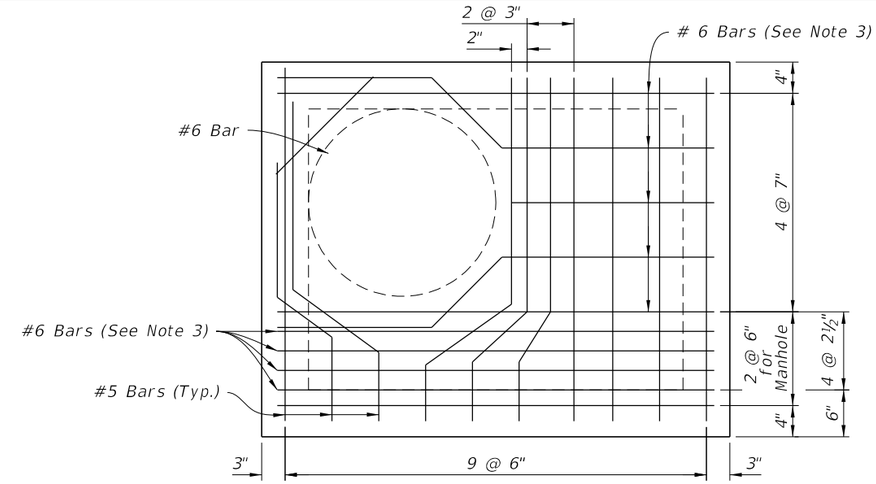

DETAIL "A"

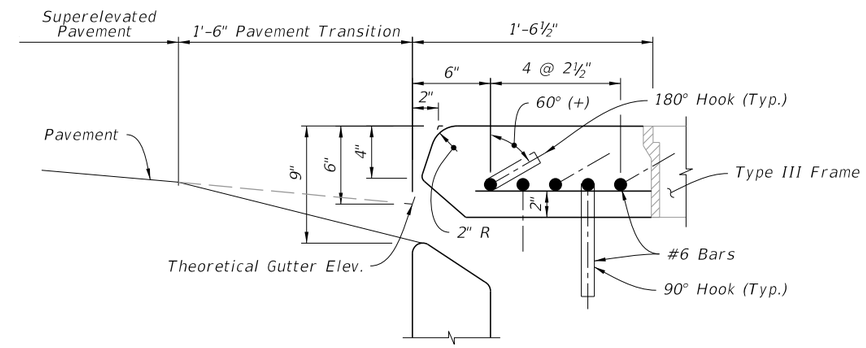

DETAIL "B"

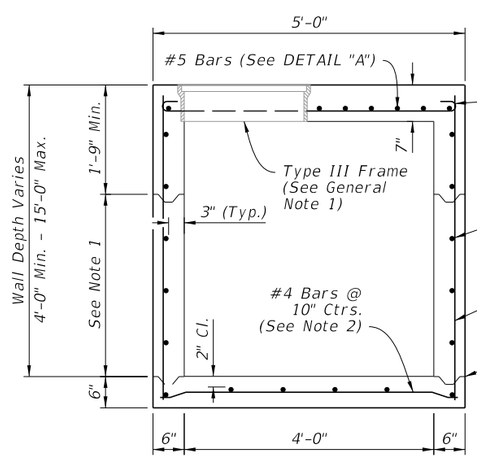

SECTION A-A

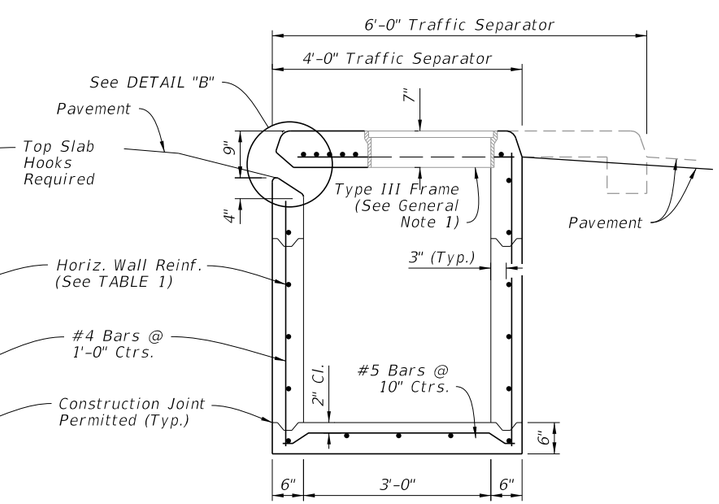

SECTION B-B

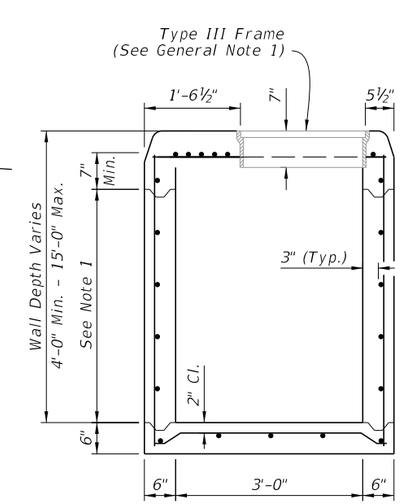

MANHOLE MODIFICATION

NOTES:

1. Construction joints permitted between these limits. See Index 425-001 for minimum dimensions.
2. For bottom slab rebar embedment options, see optional construction joints, Index 425-001.
3. ACI standard hooks required each end of straight bars and right end of bent bars: 180° hooks, canted 60°(+), on odd bars; 90° hooks, down, on even bars numbered from throat side.

TABLE 1 - HORIZONTAL WALL REINFORCING SCHEDULE

WALL DEPTH	SCHEDULE	AREA (in.²/ft.)	MAX. SPACING	
			BARS	WWR
0' - 6'	A12	0.20	12"	8"
6' - 10'	A6	0.20	6"	5"
10' - 13'	A4	0.20	4"	3"
10' - 15'	B5.5	0.24	5½"	5"

DIMENSIONAL AND REINFORCING DETAILS

9/21/2021 1:46:07 PM

LAST REVISION	REVISION	DESCRIPTION:			INDEX	SHEET
11/01/20			FY 2022-23 STANDARD PLANS	CURB INLET TYPE 8	425-023	2 of 2

GENERAL NOTES:

1. Work this Index with Index 425-001 and Index 425-010.
2. Orient grate with vanes directed toward predominant flow.
3. Provide 1¼" minimum cover for steel in slab tops unless otherwise shown. Tops may be either cast-in-place or precast concrete.
4. Place top slab openings such that 2 edges of inlet frame will be located directly above bottom wall or riser wall for Alternate B applications..
5. When used on a structure with dimensions larger than those detailed on Sheet 3 and risers are not applied, construct the top slab using Index 425-010 with the slab opening adjusted to 24"x36". The "Special Top Slab" on Index 425-010 is not permitted.
6. Frame may be adjusted with one to six courses of brick.
7. Vaned grates with approximately equal openings that satisfy AASHTO HL-93 loading are permitted. Provide reversible (right or left) grates.

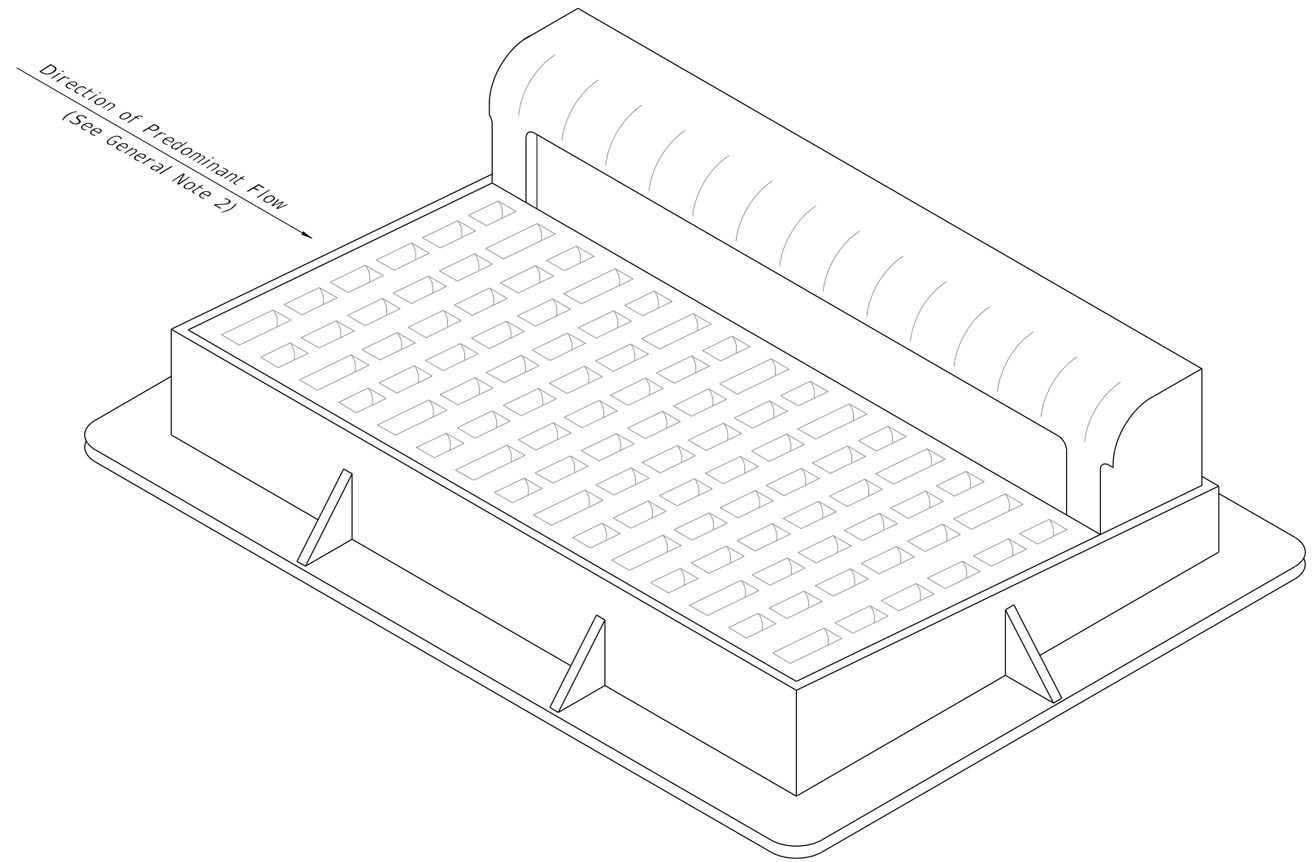

CURB INLET TOP TYPE 9

TABLE OF CONTENTS:

Sheet	Description
1	General Notes and Contents
2	Frame and Grate Details
3	Top Slab Details

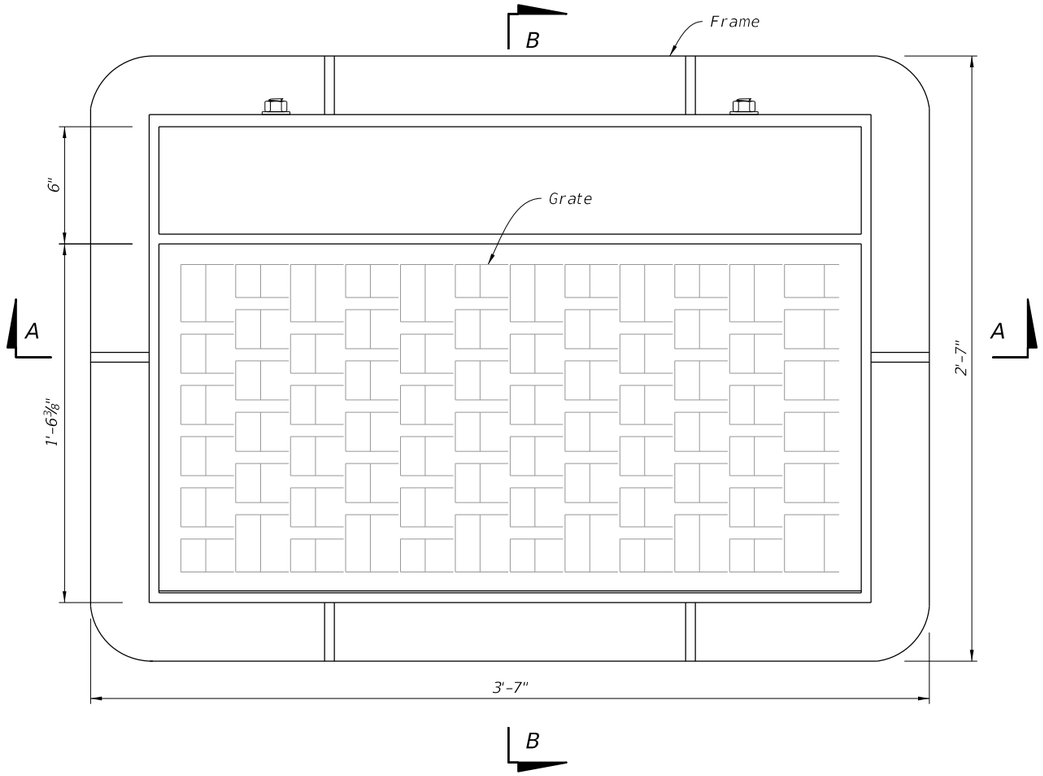

PLAN

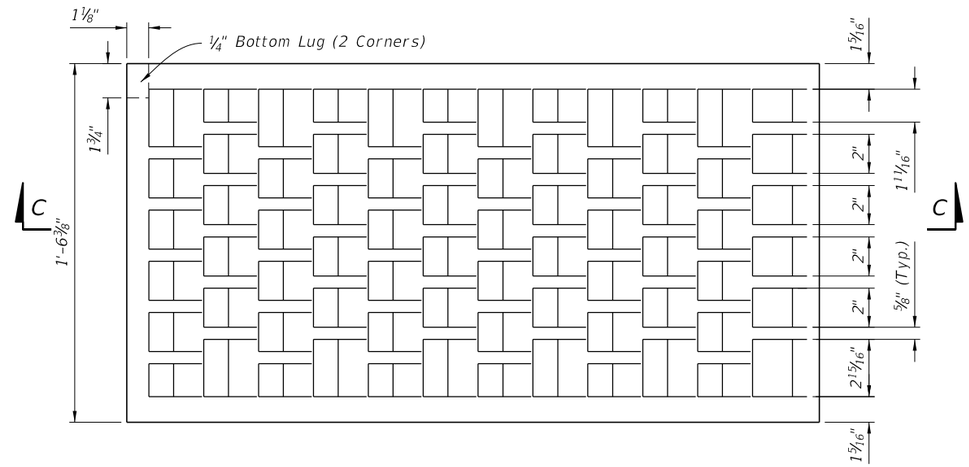

PLAN

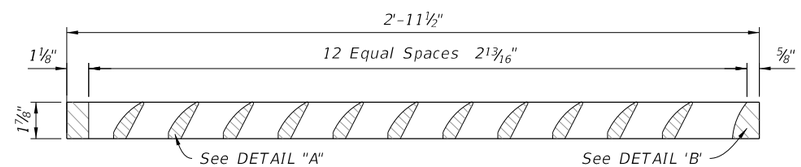

SECTON C-C

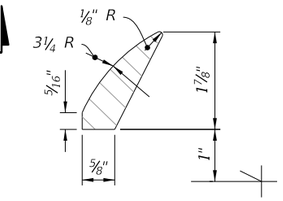

DETAIL "A"

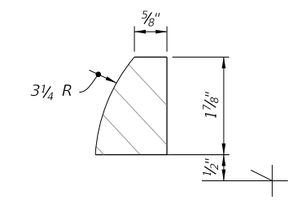

DETAIL "B"

GRATE DETAILS

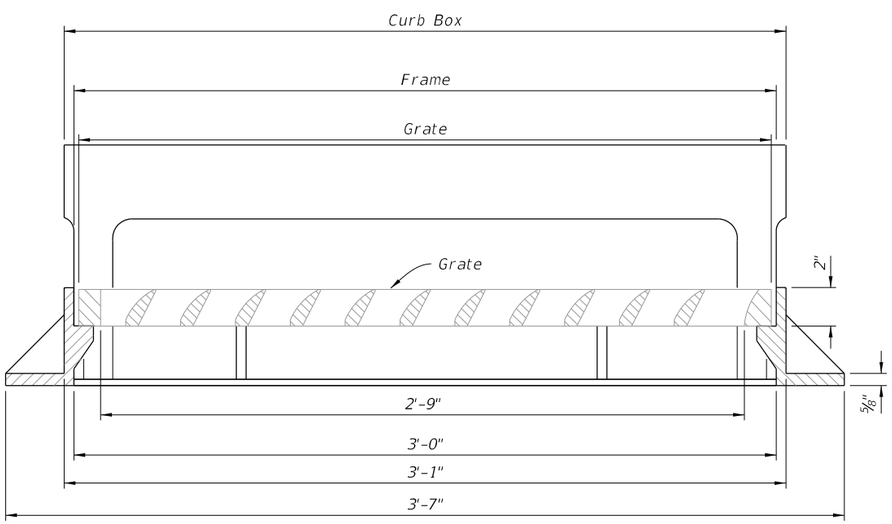

SECTION A-A

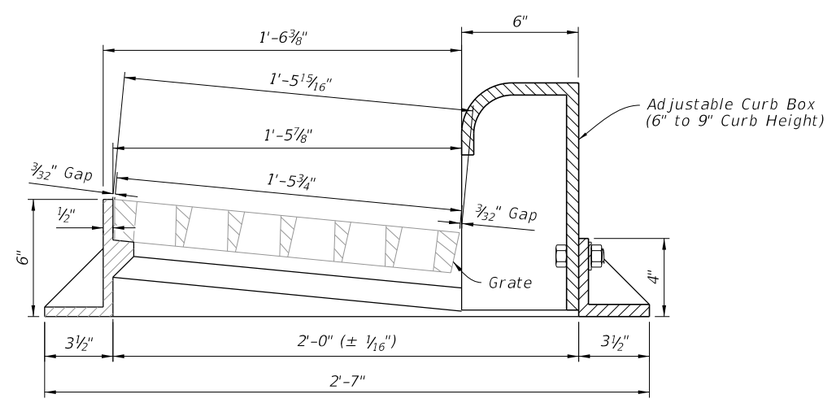

SECTION B-B

FRAME AND GRATE DETAILS

FRAME AND GRATE DETAILS

9/21/2021 1:46:08 PM

LAST REVISION	REVISION	DESCRIPTION:			INDEX	SHEET
11/01/20			FY 2022-23 STANDARD PLANS	CURB INLET TOP TYPE 9	425-024	2 of 3

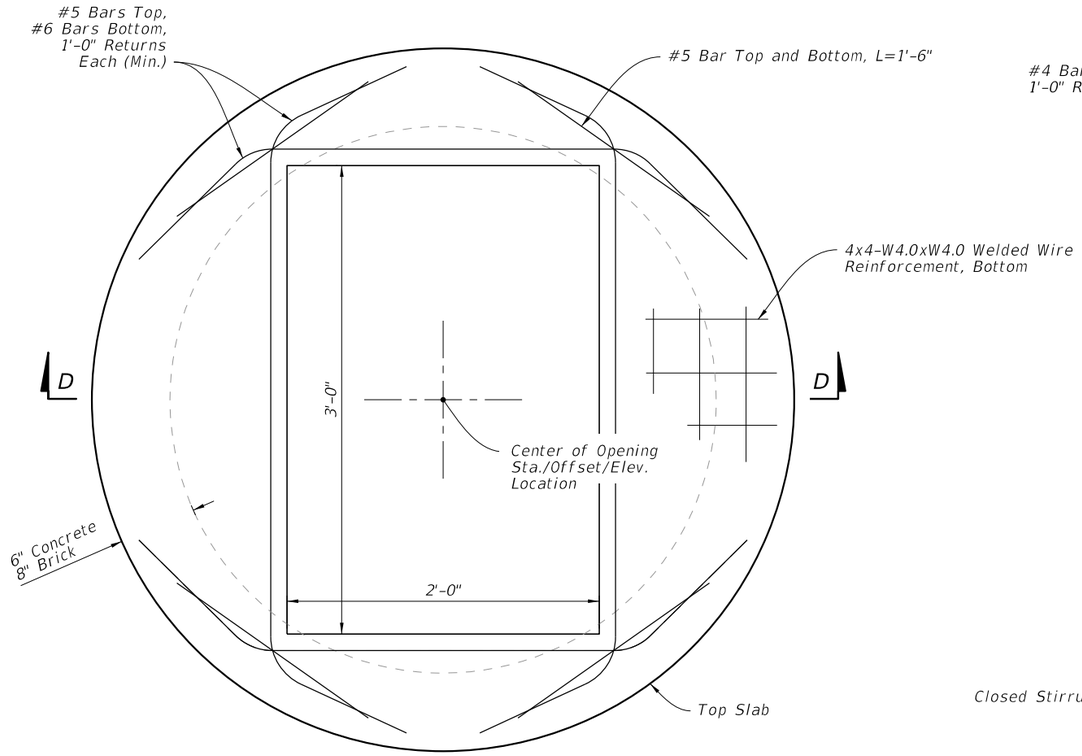

PLAN

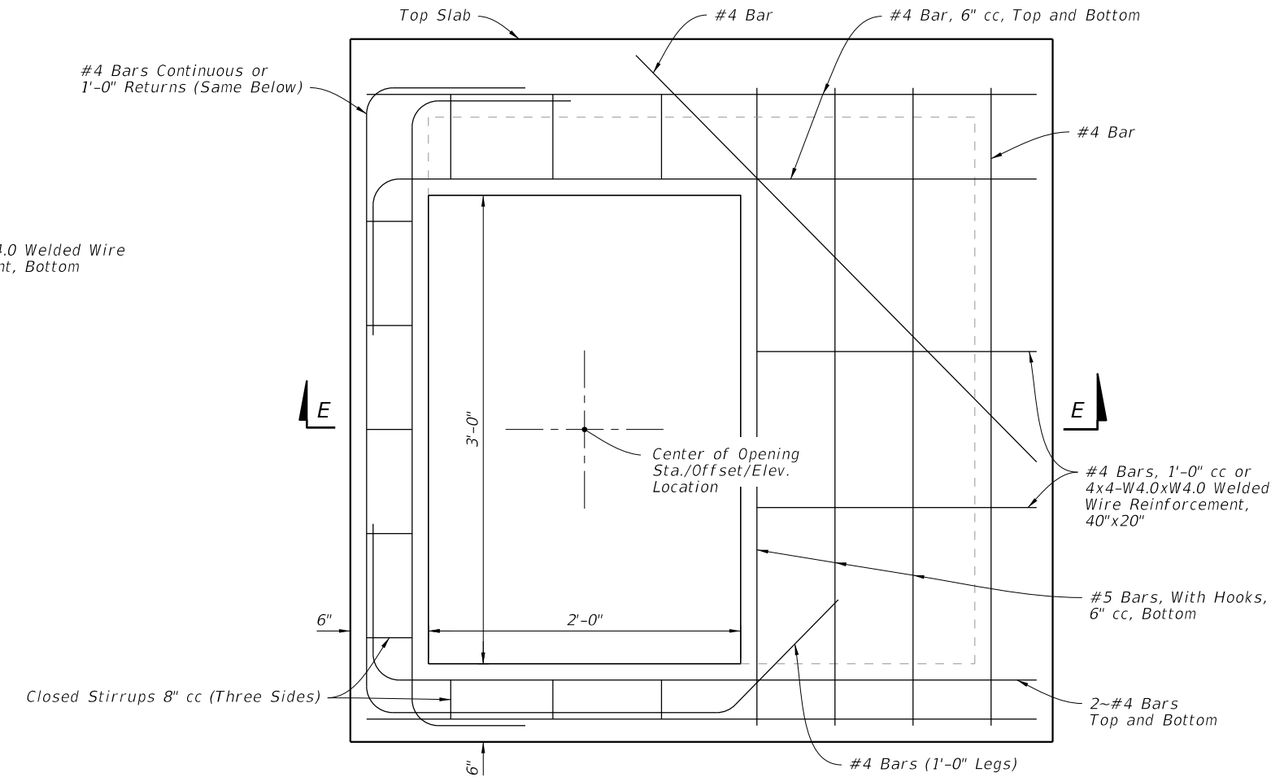

PLAN

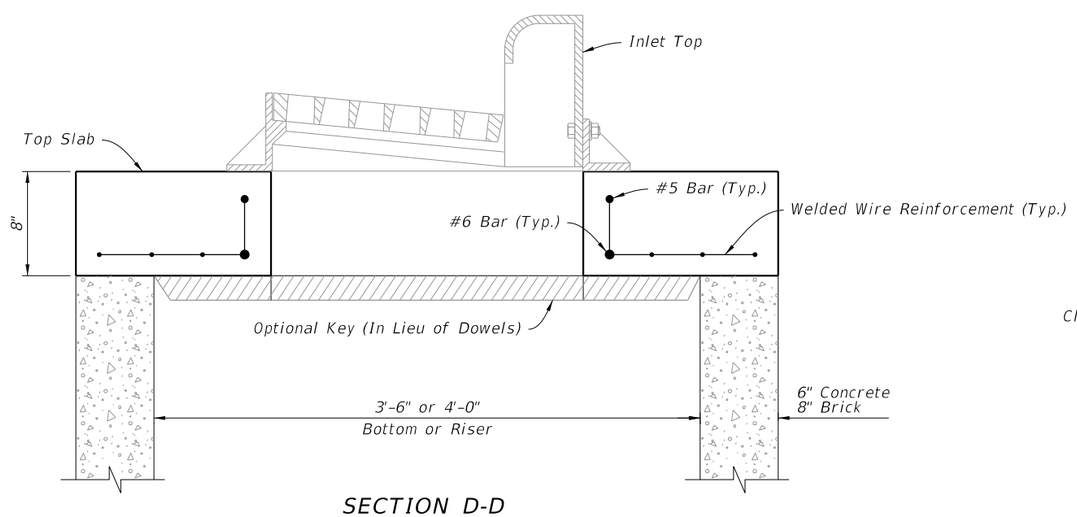

SECTION D-D

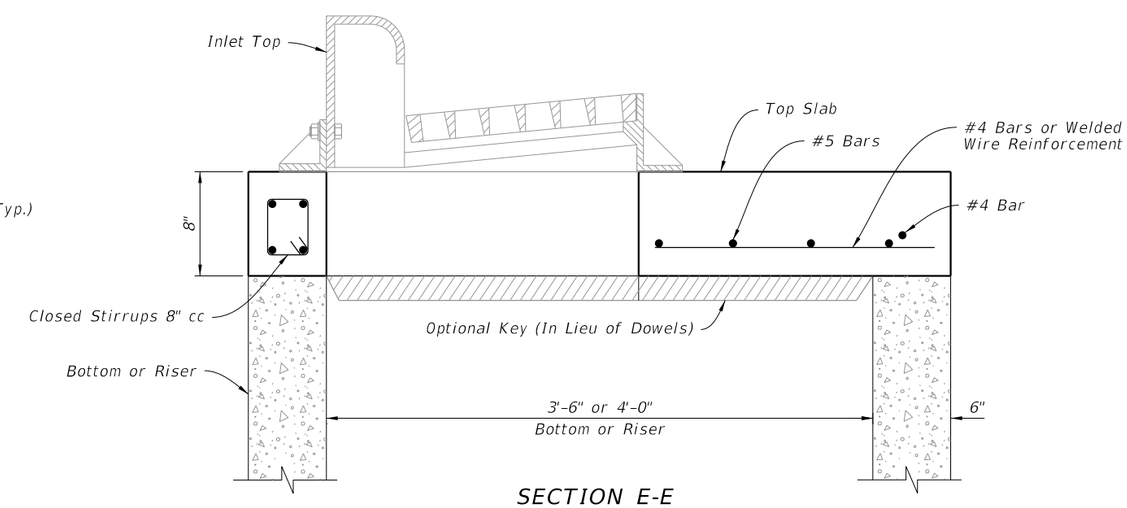

SECTION E-E

TOP SLAB DETAILS

LAST REVISION	REVISION	DESCRIPTION:			INDEX	SHEET
11/01/20			FY 2022-23 STANDARD PLANS	CURB INLET TOP TYPE 9	425-024	3 of 3

9/21/2021 1:46:09 PM

GENERAL NOTES:

1. Work this Index with Index 425-001 and Index 425-010.

2. Orient grate with vanes directed toward predominant flow.

3. Provide 1¼" minimum cover for steel in slab tops unless otherwise shown. Tops may be either cast-in-place or precast concrete.

4. Place top slab openings such that 2 edges of inlet frame will be located directly above bottom or riser walls, for Alternate B applications.

5. When used on a structure with dimensions larger than those detailed on Sheet 3 and risers are not applied, Construct the top slab using Index 425-010 with the slab opening adjusted to 22"x24". The "Special Top Slab" on Index 425-010 is not permitted.

6. Frame may be adjusted with one to six courses of brick.

7. Vaned grates with approximately equal openings that satisfy AASHTO HL-93 loading are permitted. Provide reversible (right or left) grates.

TABLE OF CONTENTS:

Sheet	Description
1	General Notes and Contents
2	Frame and Grate Details
3	Top Slab Details

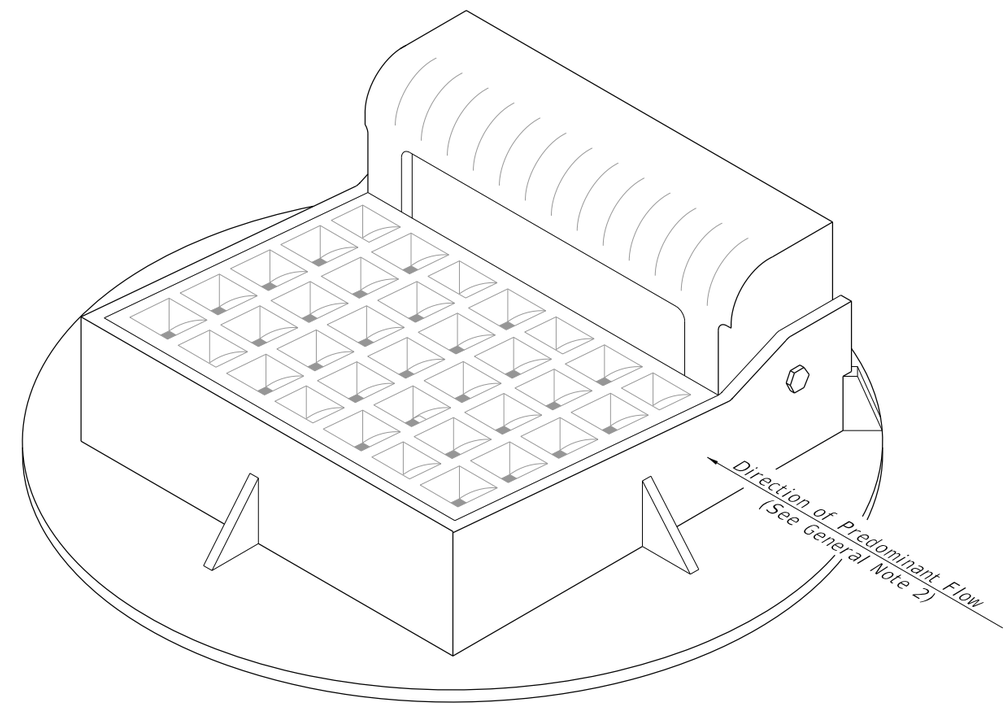

CURB INLET TOP TYPE 10

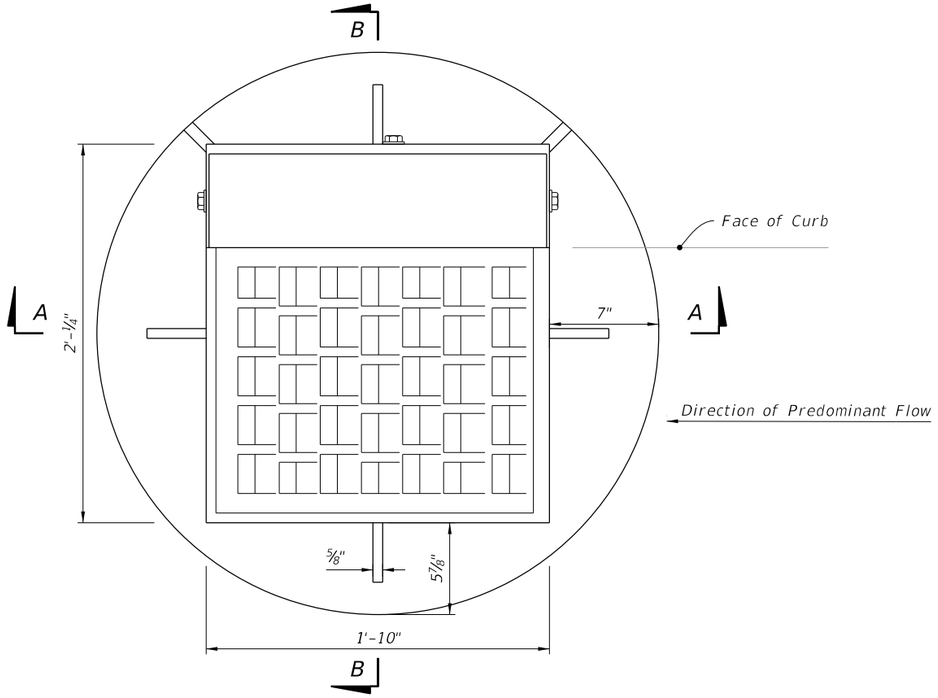

PLAN

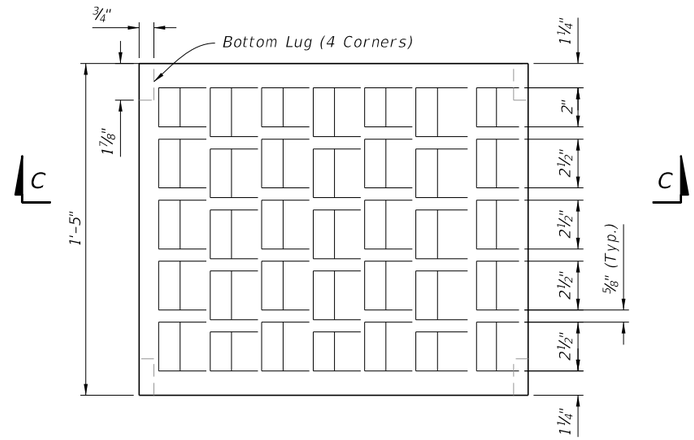

PLAN

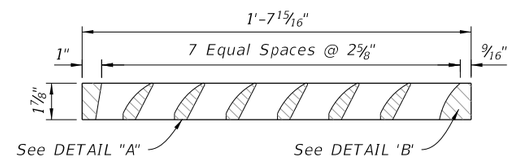

SECTON C-C

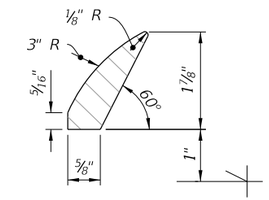

DETAIL "A"

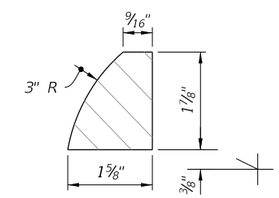

DETAIL "B"

GRATE DETAILS

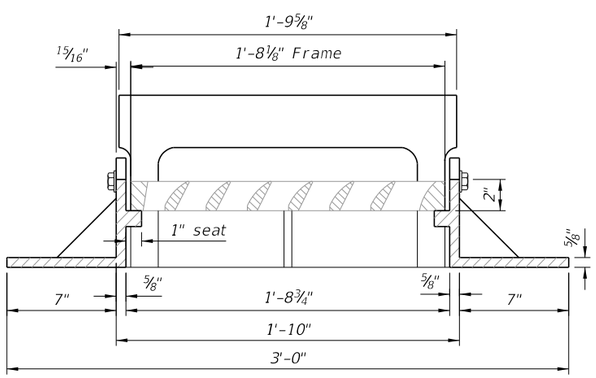

SECTION A-A

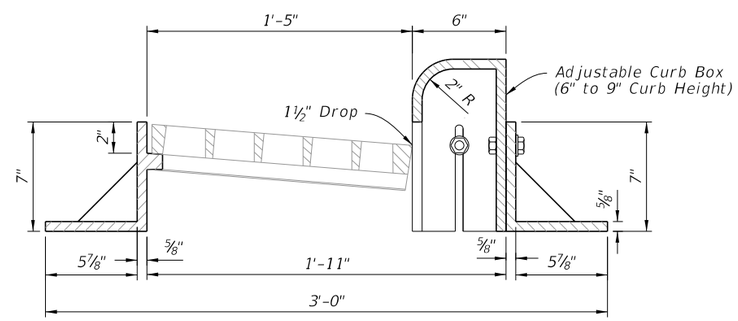

SECTION B-B

FRAME AND GRATE DETAILS

FRAME AND GRATE DETAILS

LAST REVISION	REVISION	DESCRIPTION:			INDEX	SHEET
11/01/20			FY 2022-23 STANDARD PLANS	CURB INLET TOP TYPE 10	425-025	2 of 3

9/21/2021 1:46:10 PM

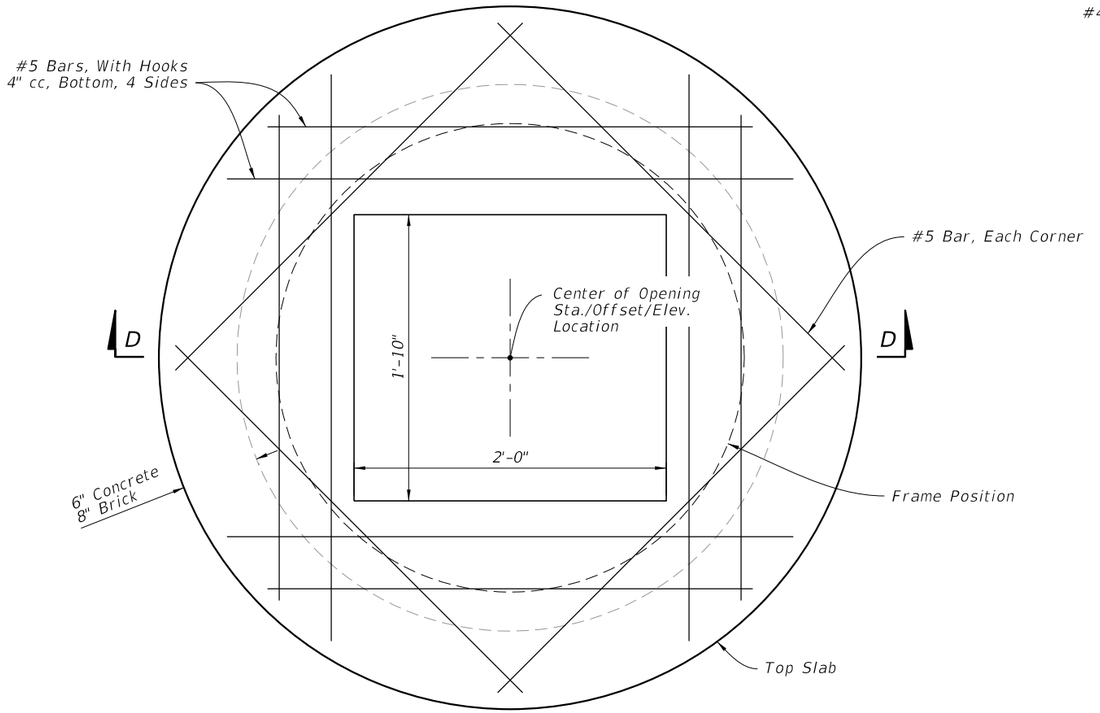

PLAN

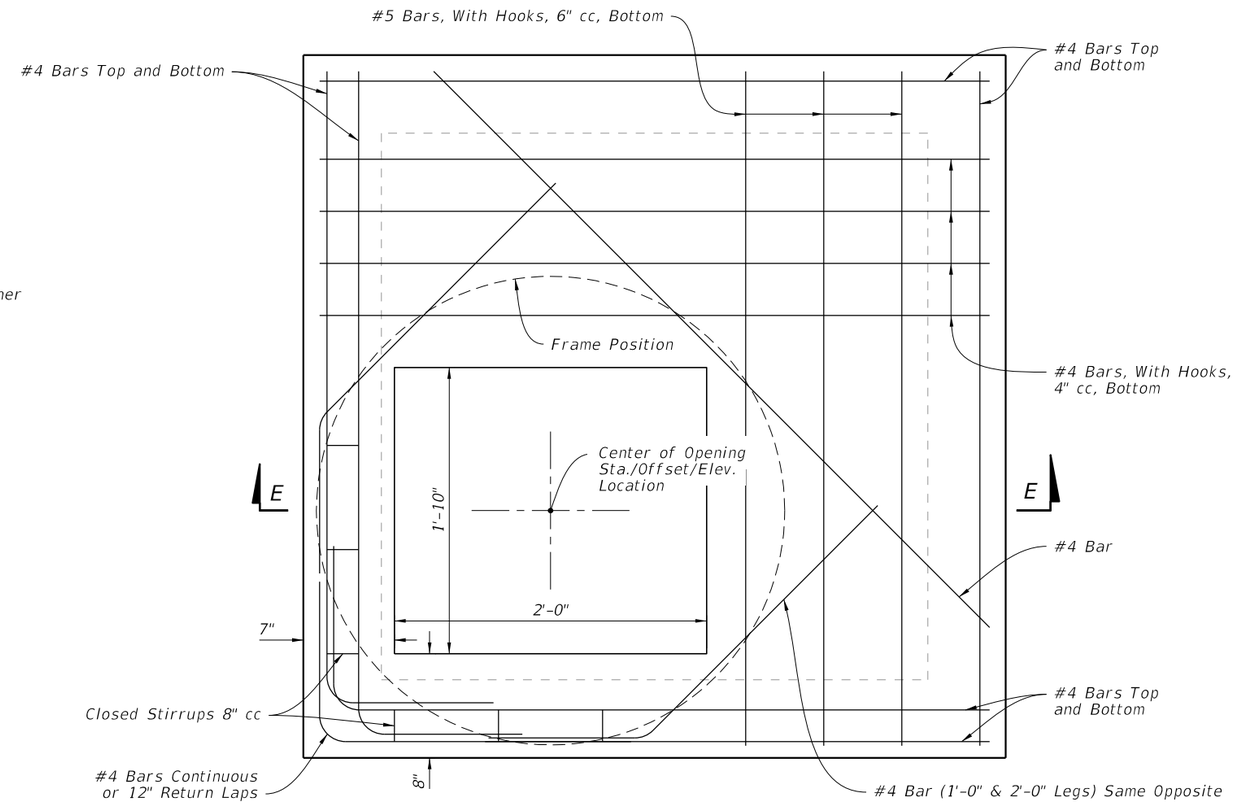

PLAN

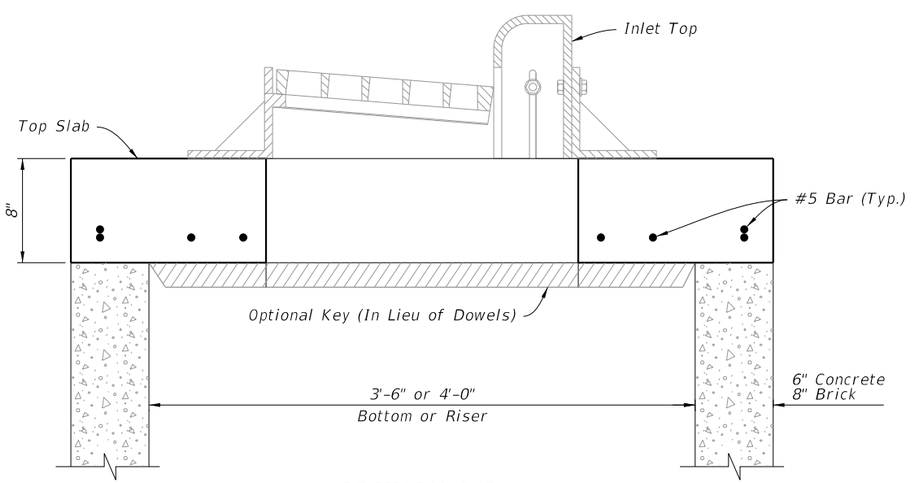

SECTION D-D

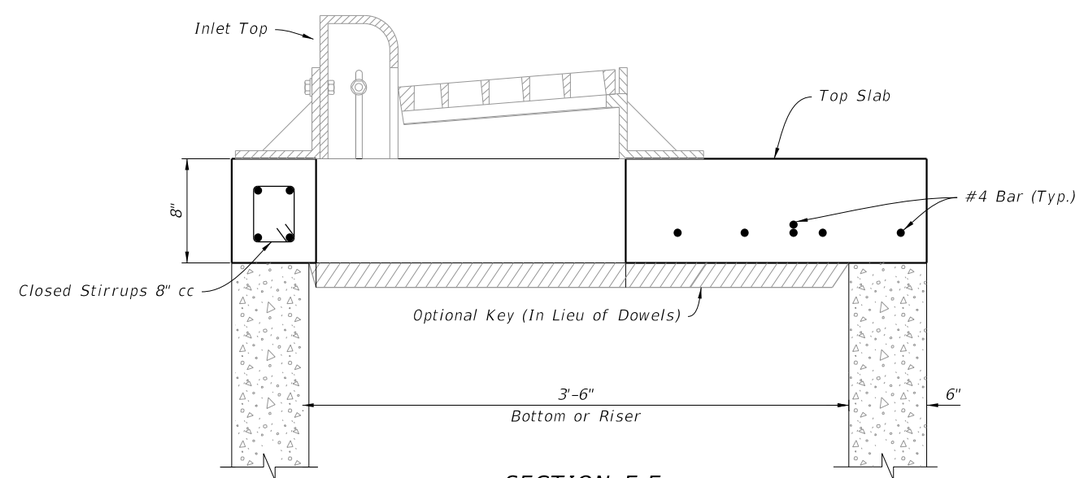

SECTION E-E

TOP SLAB DETAILS

LAST REVISION	REVISION	DESCRIPTION:			INDEX	SHEET
11/01/20			FY 2022-23 STANDARD PLANS	CURB INLET TOP TYPE 10	425-025	3 of 3

9/21/2021 1:46:11 PM

GENERAL NOTES:

1. Work this Index with Index 425-001 and Index 425-010.

2. Where called for in the Plans, use this inlet in conjunction with Median Barrier per Index 521-001.

3. Inlet Descriptions:
   Type 1: Inlet on one side of Median Barrier
   Type 2: Inlet on both sides of Median Barrier

4. See Index 425-040 for grate details. Use the parallel bar grate unless reticuline grate is called for in the Plans.

5. Chamfer all edges to ¾" or tool to ¼" radius.

6. Use Grade 60 #4 bars for inlet wall reinforcing. Position horizontal wall reinforcing 3" from the inside face unless otherwise shown. Equivalent areas of welded wire per Index 425-001 are permitted.

7. Use Grade 60 #4 or #5 bars for barrier reinforcing as required to match the stirrups and longitudinal steel of the adjacent Median Barrier per Index 521-001. Provide 2" or 2 ½"reinforcing steel cover to match the adjacent barrier reinforcing cover unless otherwise shown. Match the stirrup spacing of the adjacent barrier. Run longitudinal steel bars over the full length of the Concrete Barrier Transition and run continuously with the longitudinal steel of the adjacent barriers. Use lap splices as required.

8. Dimensions are for both precast and cast-in-place inlets unless otherwise noted.

9. Install one layer of ASTM D6380 Class S, Type III organic felt bond breaker between inlet and barrier, including footings.

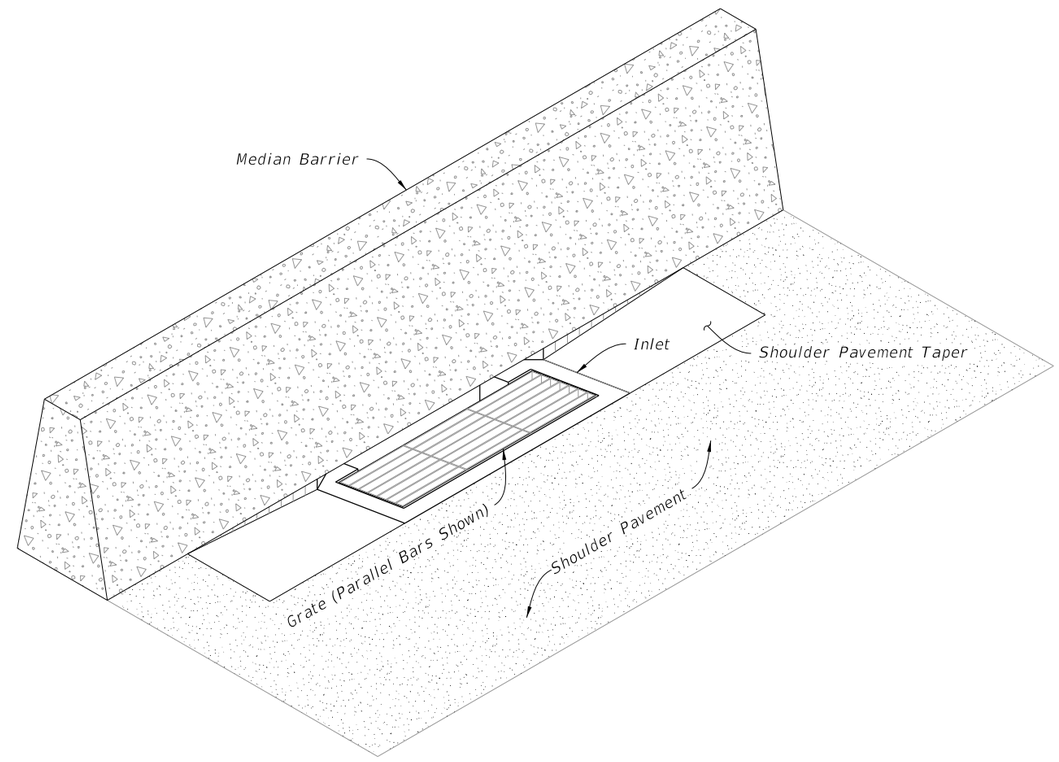

MEDIAN BARRIER INLET
(Type 1 Shown, Type 2 Similar)

TABLE OF CONTENTS:

Sheet	Description
1	General Notes and Contents
2	Type 1 and 2 Dimensional and Reinforcing Details
3	Type 1 Collar Dimensional and Reinforcing Details
4	Type 2 Collar Dimensional and Reinforceing Details

9/21/2021 1:46:12 PM

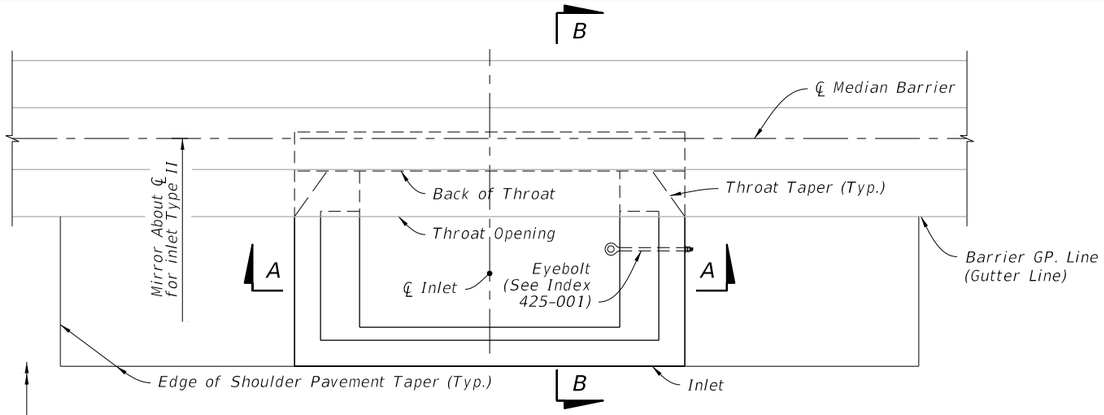

PLAN

TABLE 1: HORIZONTAL WALL REINFORCING SCHEDULE				
WALL DEPTH	SCHEDULE	AREA (in.²/ft.)	MAX. SPACING	
			BARS	WWF
0'-3'	A12	0.20	12"	8"
3'-6'	A6	0.20	6"	5"
6'-9'	B5.5	0.24	5½"	5"
9'-15'	C6.5	0.37	6½"	6"

NOTES:

1. Precast shown, cast-in-place (C-I-P) similar.
2. Construction joints permitted between these limits. See Index 425-001 for minimum dimensions.
3. Plan view and Section AA is similar to Type I Inlet.
4. Alternate B Structure Bottom or Special Only when called for inthe Plans.

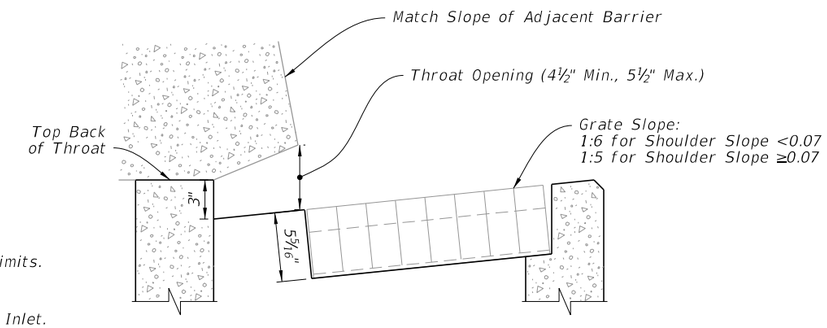

DETAIL "A"

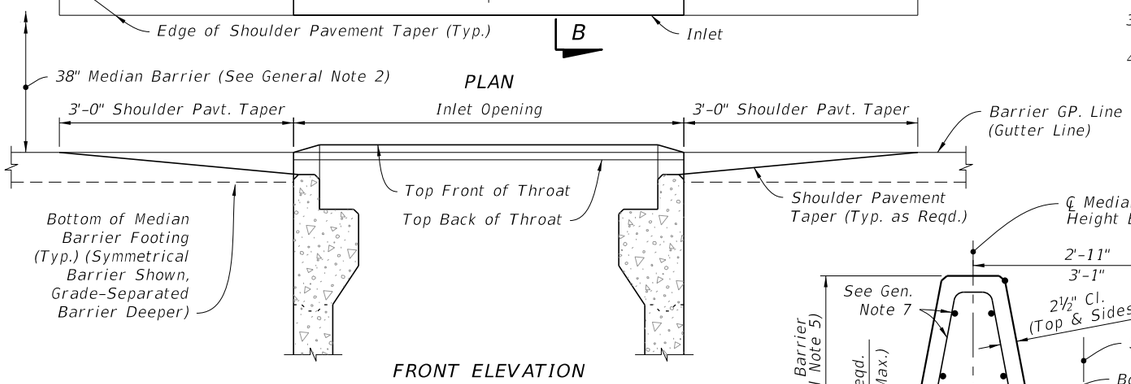

FRONT ELEVATION

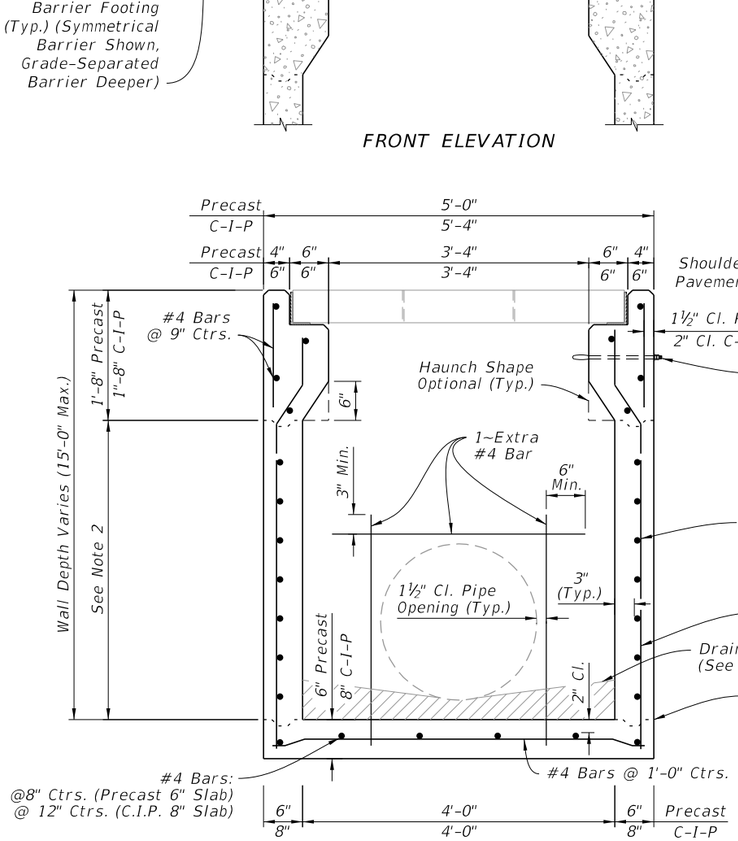

SECTION A-A
(Both Type I and Type II, Pipe Opening Shown)

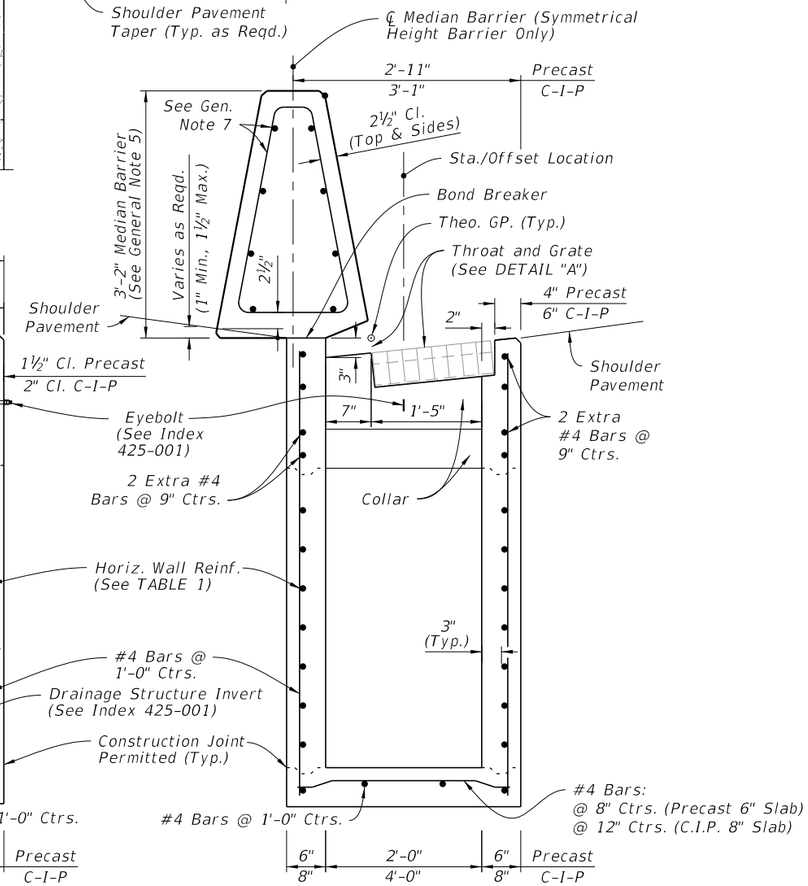

SECTION B-B
(Type I, Pipe Opening Not Shown)

TYPE 1 INLET

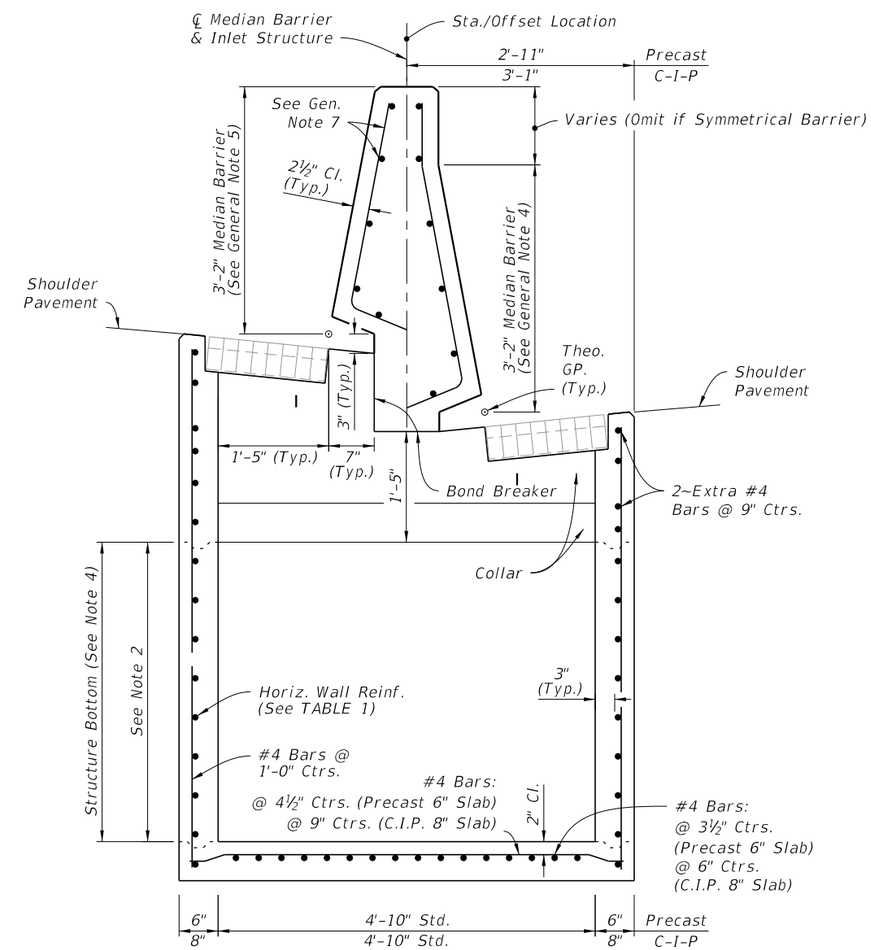

SECTION B-B
(See Note 3)

TYPE 2 INLET

TYPE 1 AND 2 DIMENSIONAL AND REINFORCING DETAILS

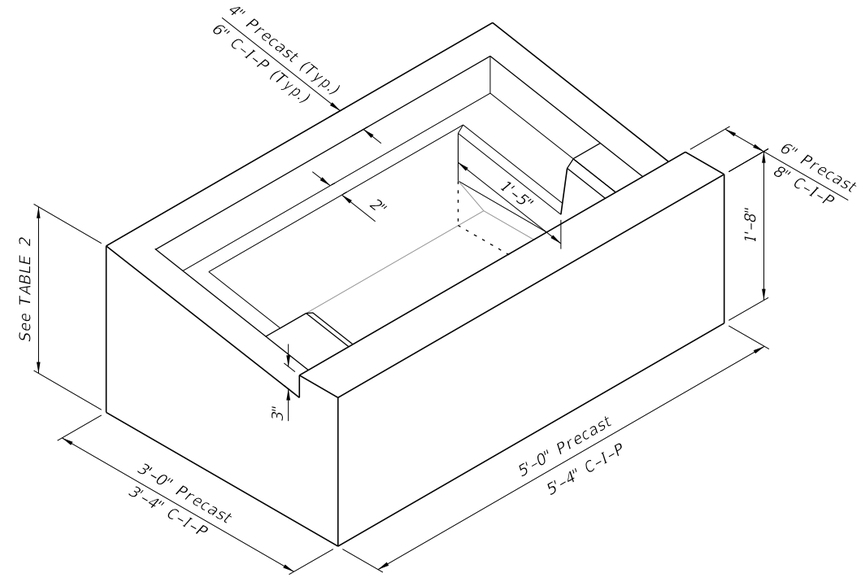

ISOMETRIC VIEW
(Grate Not Shown)

TABLE 2: COLLAR DIMENSIONS		
GRATE SLOPE	PRECAST	C-I-P
1:5	1'-11"	1'-11⅜"
1:6	1'-10"	1'-10⅜"

NOTE:

Precast shown, cast in place (C-I-P) similar.

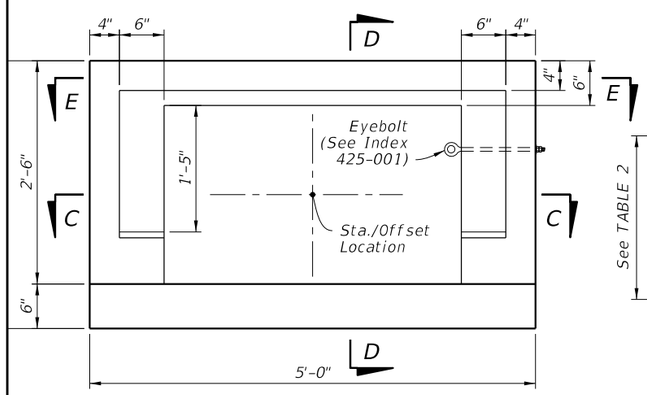

PLAN

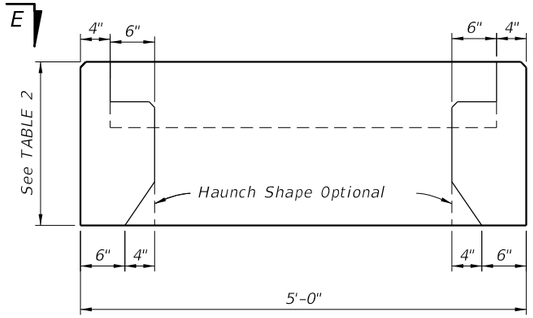

VIEW E-E

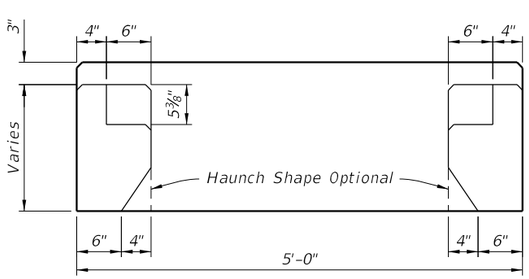

SECTION C-C

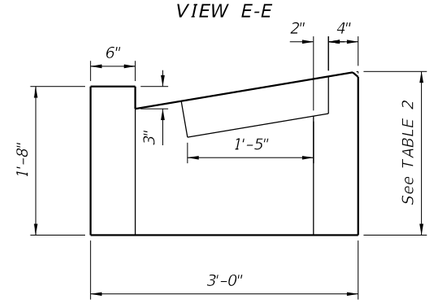

SECTION D-D

DIMENSIONAL DETAILS

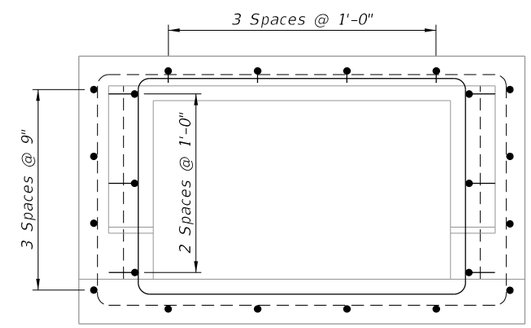

PLAN

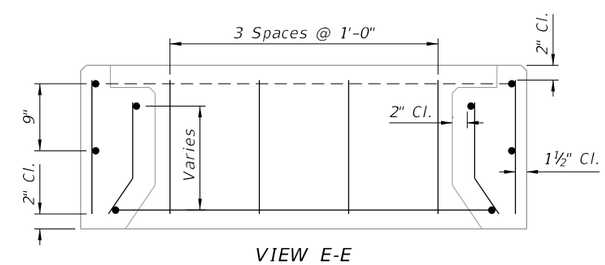

VIEW E-E

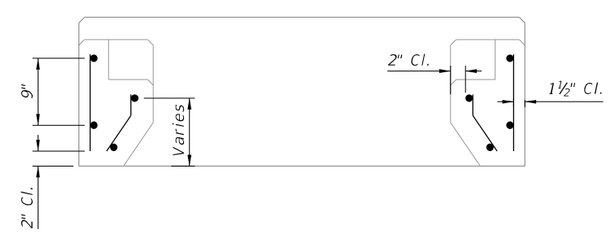

SECTION C-C

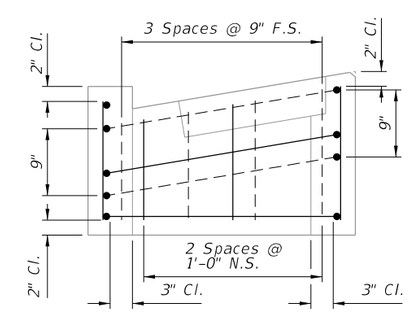

SECTION D-D

REINFORCING DETAILS

TYPE 1 COLLAR DIMENSIONAL AND REINFORCING DETAILS

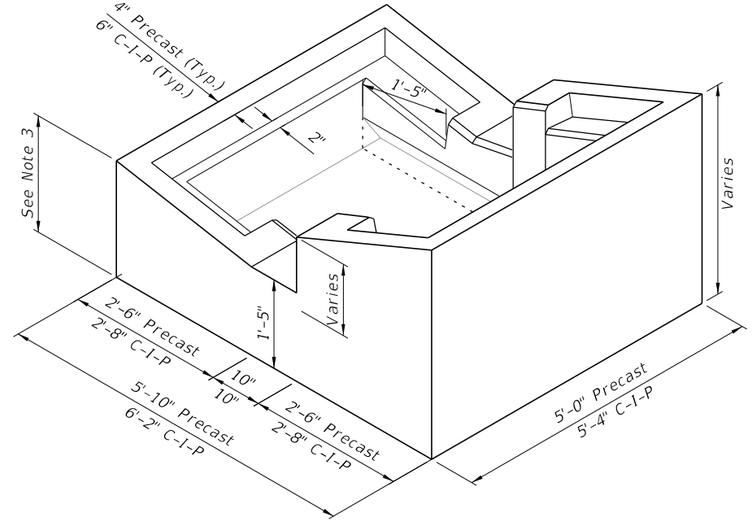

ISOMETRIC VIEW
(Grate Not Shown)

NOTES:

1. Precast shown, cast in place (C-I-P) similar.
2. Place bars at a maximum of 1'-0".
3. See TABLE 2 on Sheet 3.

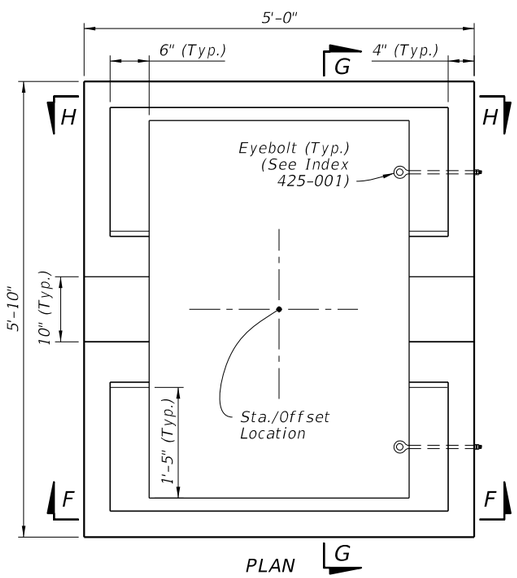

PLAN

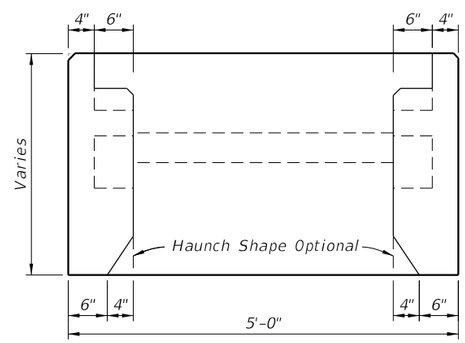

VIEW H-H

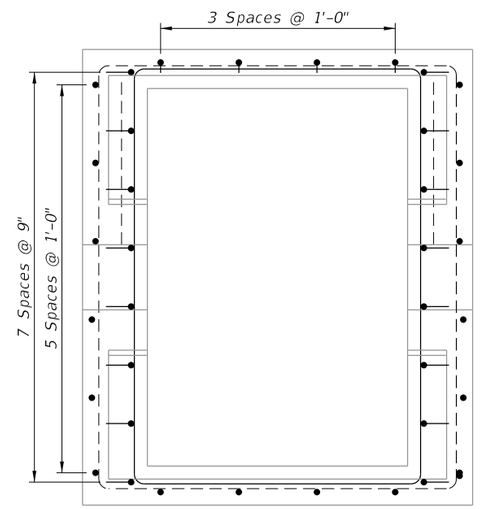

PLAN

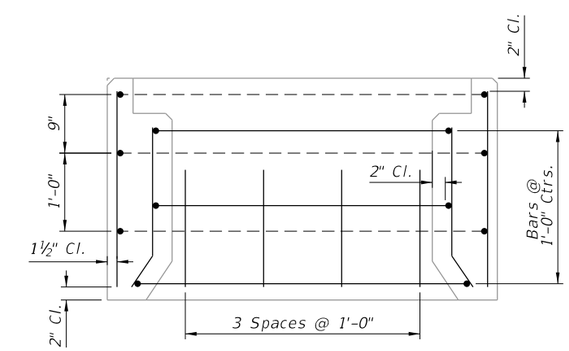

VIEW H-H

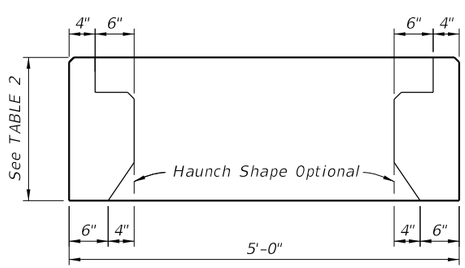

SECTION F-F

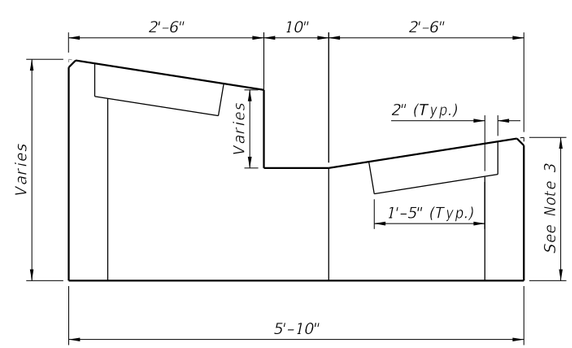

SECTION G-G

DIMENSIONAL DETAILS

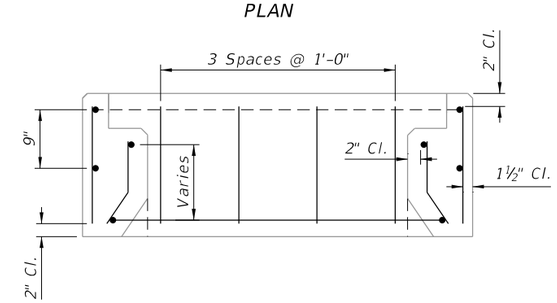

SECTION F-F

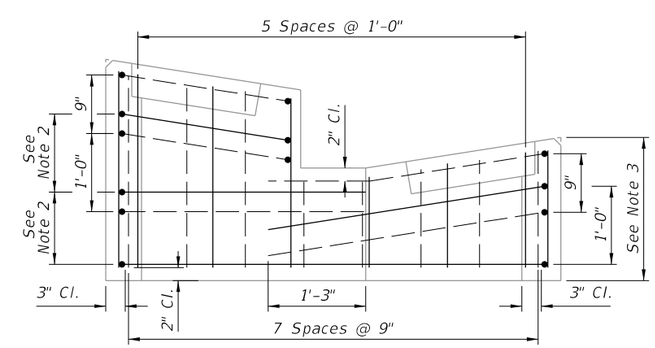

SECTION G-G

REINFORCING DETAILS

TYPE 2 COLLAR DIMENSIONAL AND REINFORCING DETAILS

GENERAL NOTES:

1. Work this Index with Index 425-001 and Index 425-010.

2. When called for in the Plans, use this inlet in conjunction with median or shoulder barrier per Index 521-001 or a barrier with junction slab and wall coping per Index 521-610.

3. Reinforce the upper 2'-3" of the inlet in accordance with sections CC, DD, and EE regardless of construction method.

4. Chamfer exposed edges and corners to ¾" or tool to ¼" radius.

5. Field installation of a roller bar will not be permitted. Adjust tolerance during fabrication or casting, or, match grate to structure prior to galvanizing.

6. Use Grade 60, #4 bars for reinforcing steel. See Index 425-001 for equivalent area of welded wire fabric.

7. Dimensions are for both precast and cast-in-place inlets unless otherwise noted.

8. Anchor bolts: Use either ASTM A307 hex head bolts cast-in-place, or ASTM A36 or F1554 (Grade 36) galvanized fully threaded rod, adhesive bonded anchors installed in accordance with Specification 416. Rods must be a minimum of 6" long with 4" minimum embedment with one ASTM 194 or A563 heavy hex head nut and one ASTM F436 flat washer each. Hot-dip galvanize anchor bolts, nuts, and washers.

9. Reduce Cross Slope: Use a flatter cross slope as required to match adjacent grading per the Plans. Reduce vertical dimensions and bar spacing as needed to maintain concrete cover as shown.

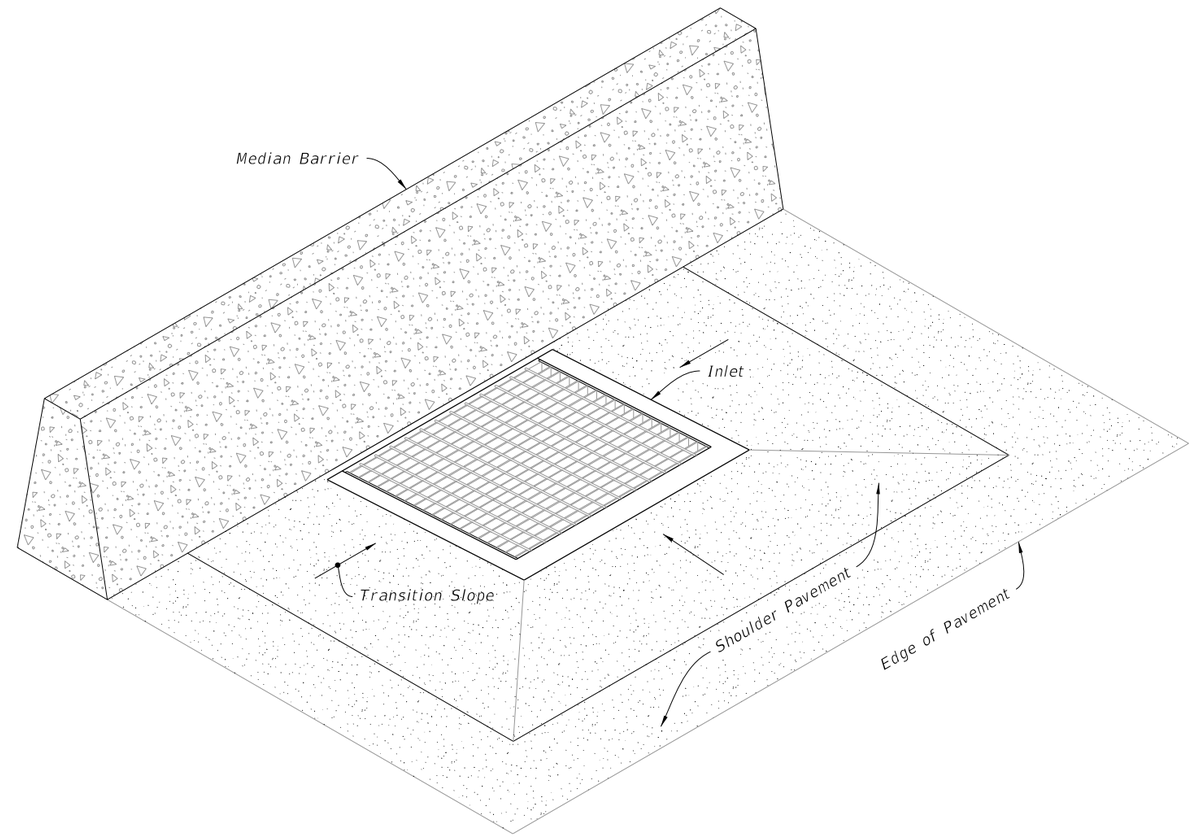

ADJACENT BARRIER INLET
(Shoulder Barrier Similar)

TABLE OF CONTENTS:

Sheet	Description
1	General Notes and Contents
2	Dimensional, Reinforcing, and Steel Grate Details
3	Inlet Collar Dimensional, Reinforcing, and Backwall Plate Details
4	Shoulder Pavement Wrap, Barrier Type Examples, and Structure Bottoms

NOTES:

1. See Sections E-E, F-F, and G-G on Sheet 3 for reinforcing details.
2. Construction joints permitted between these limits. See Index 425-001 for minimum dimensions.
3. Field Installation: When clearance (C) exceeds ⅝" weld a one-piece round bar (roller bar) to the end of the cross bars and end band angles to reduce the clearance ($\bar{C}$) to ⅝" or less. After welding the bar, clean bar and damaged grate coating and coat with a coal tar pitch varnish.

TABLE 1: HORIZONTAL WALL REINFORCING SCHEDULE

WALL DEPTH	SCHEDULE	AREA (in.²/ft.)	MAX. SPACING	
			BARS	WWR
0'-5'	A12	0.20	12"	8"
5'-10'	A6	0.20	6"	5"
10'-15'	A4	0.20	4"	3"
10'-15'	B5.5	0.24	5½"	5"

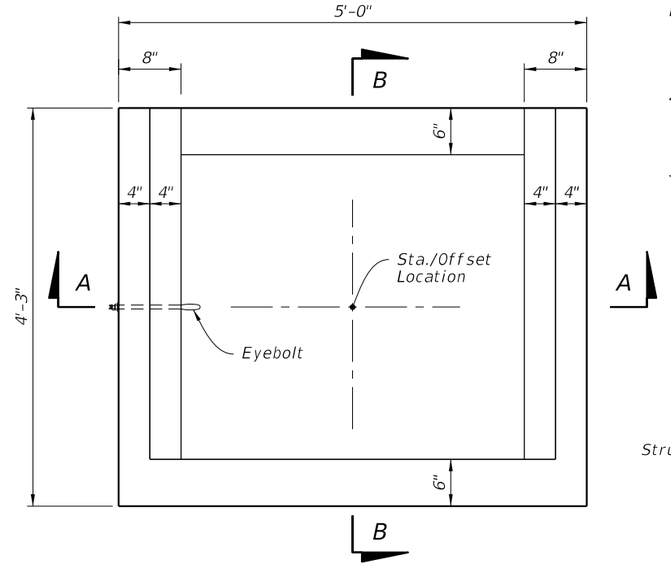

PLAN

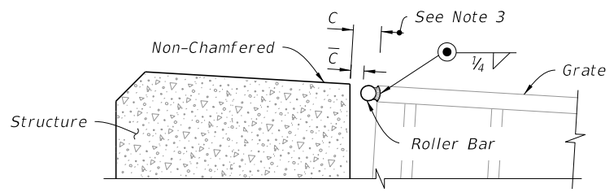

DETAIL "A"

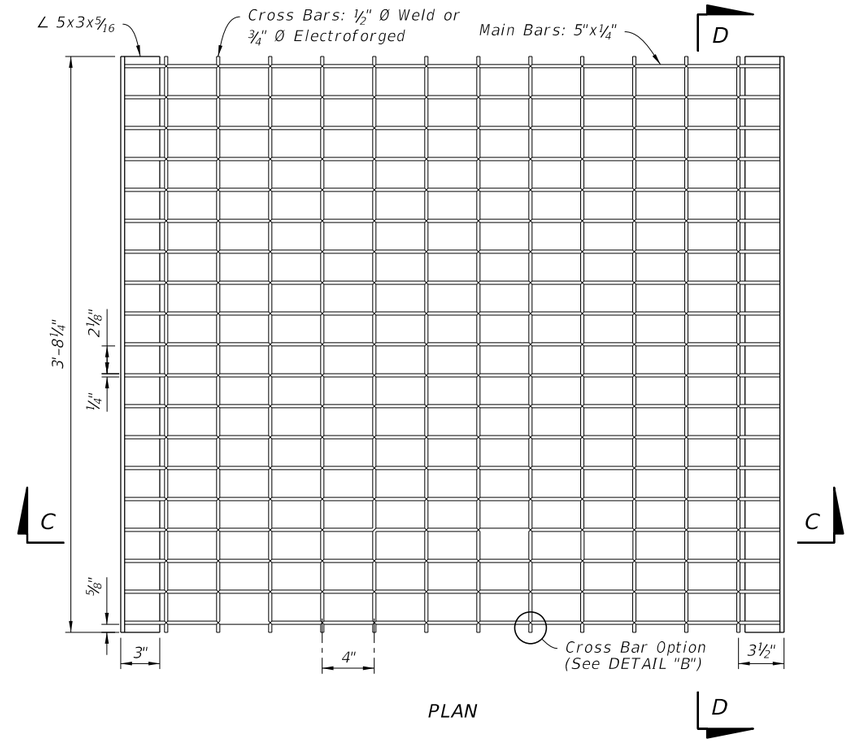

PLAN

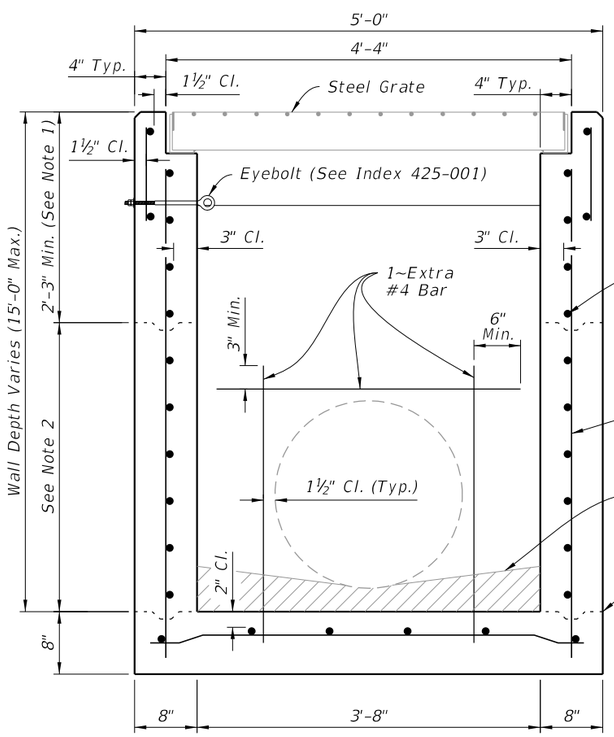

SECTION A-A
(Pipe Opening Shown)

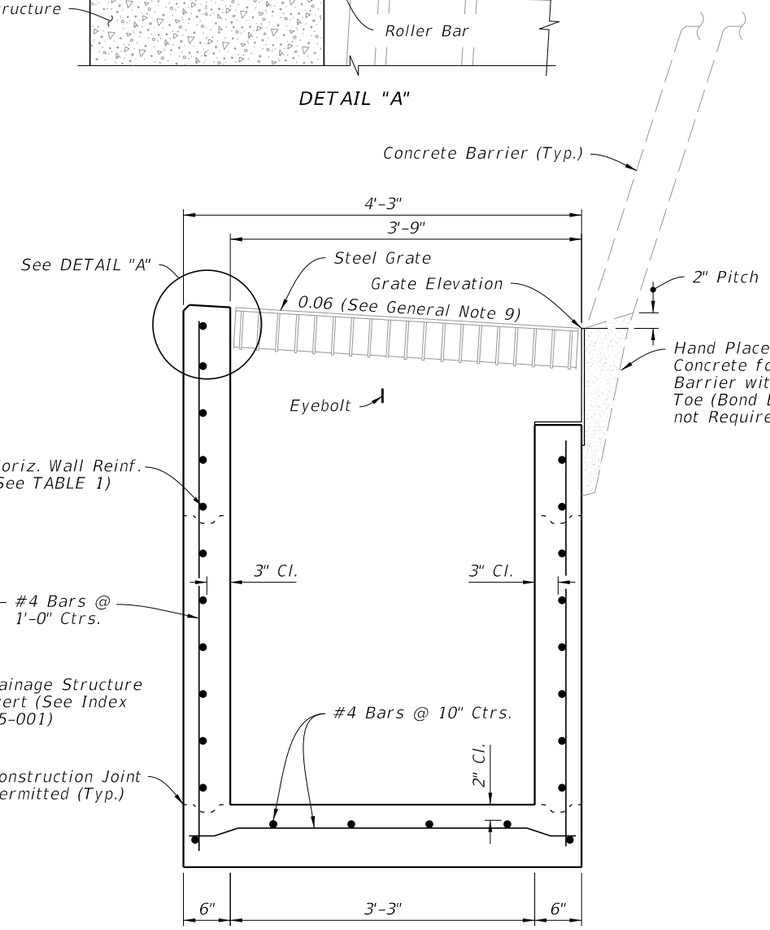

SECTION B-B
(Pipe Opening Not Shown)

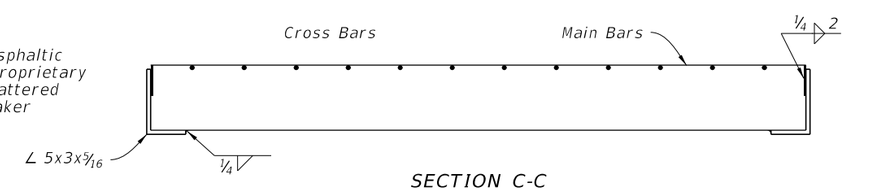

SECTION C-C

SECTION D-D

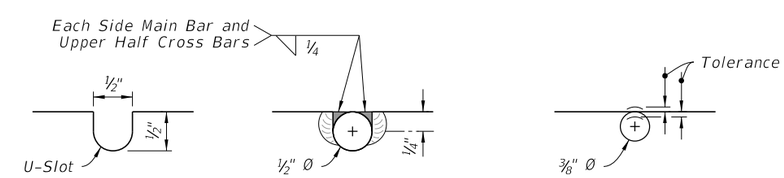

WELDED

ELECTROFORGED

DETAIL "B"

DIMENSIONAL AND REINFORCEMENT

STEEL GRATE

DIMENSIONAL, REINFORCING, AND STEEL GRATE DETAILS

LAST REVISION	REVISION	DESCRIPTION:			INDEX	SHEET
11/01/20			FY 2022-23 STANDARD PLANS	ADJACENT BARRIER INLET	425-031	2 of 4

9/21/2021 1:46:16 PM

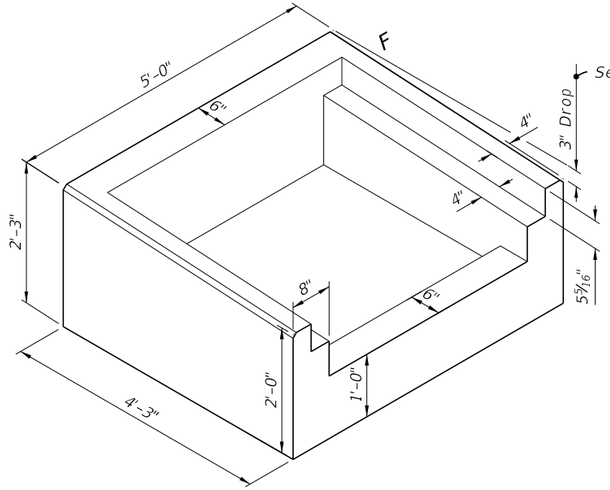

INLET COLLAR

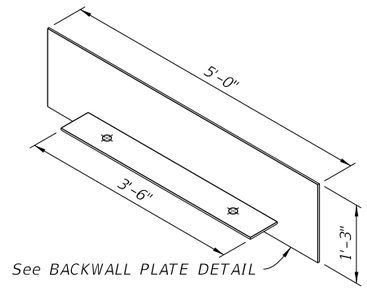

BACKWALL PLATE

ISOMETRIC VIEW

(Grate Not Shown)

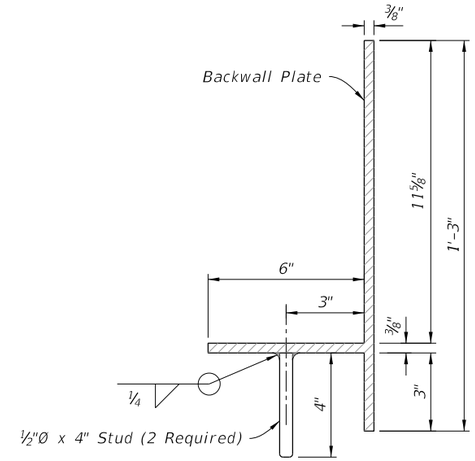

GROUT STUD

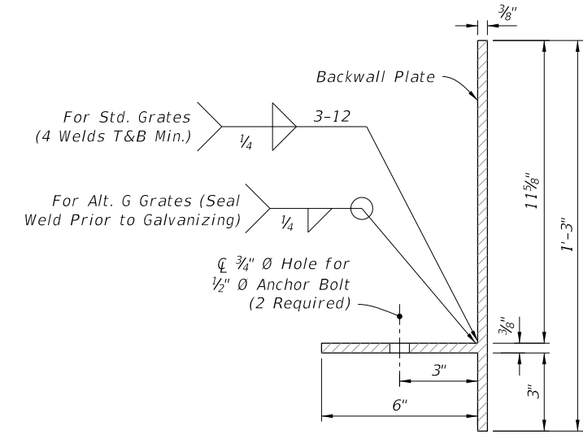

ANCHOR BOLT

BACKWALL PLATE DETAIL

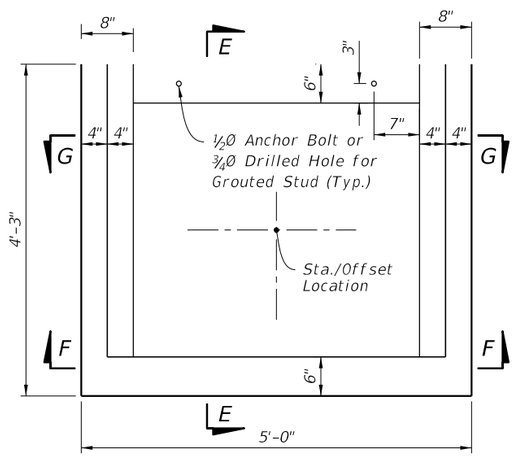

PLAN

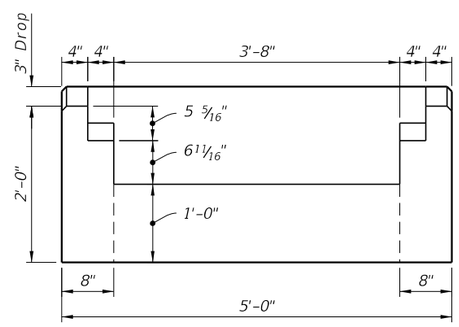

VIEW G-G

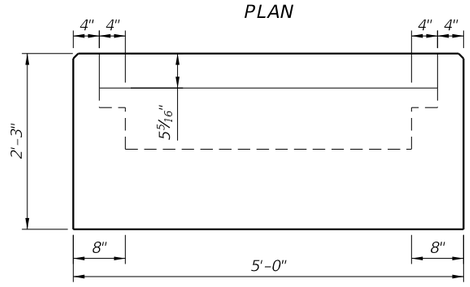

SECTION F-F

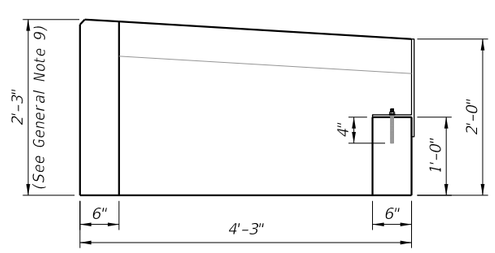

SECTION E-E

DIMENSIONAL DETAILS

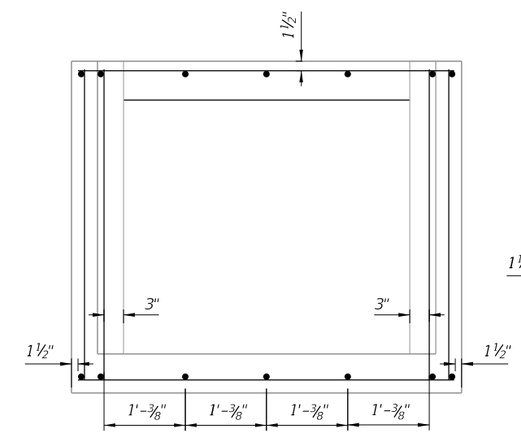

PLAN

NOTE:

1/2" Anchor Bolt or Stud (Anchor Bolt shown).
See the BACKWALL PLATE DETAILS.

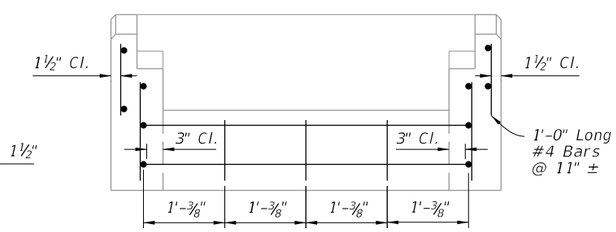

VIEW G-G

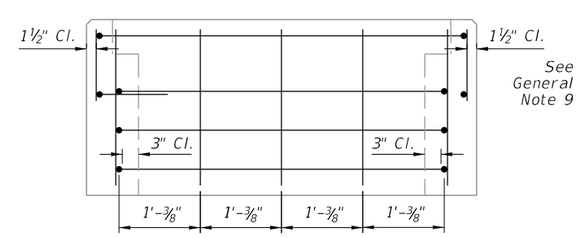

SECTION F-F

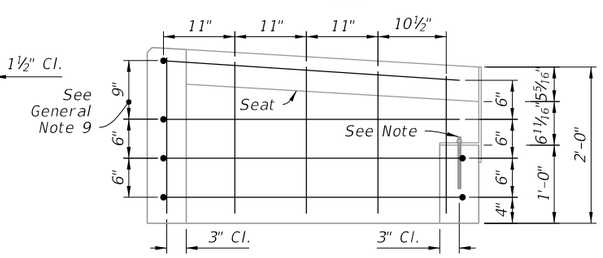

SECTION E-E

REINFORCING DETAILS

INLET COLLAR DIMENSIONAL, REINFORCING, AND BACKWALL PLATE DETAILS

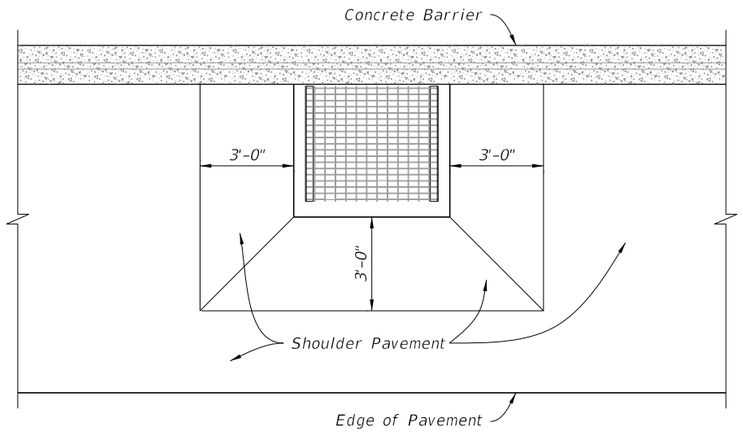

LOW SIDE SUPERELEVATION

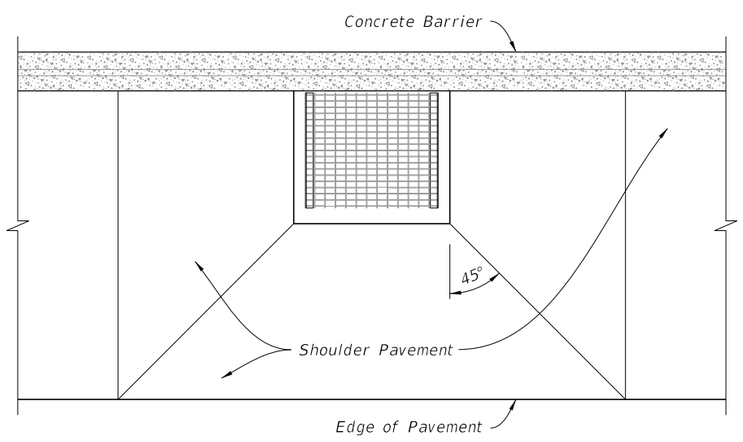

HIGH SIDE TRANSITION

SUPERELEVATION SHOULDER PAVEMENT WRAP

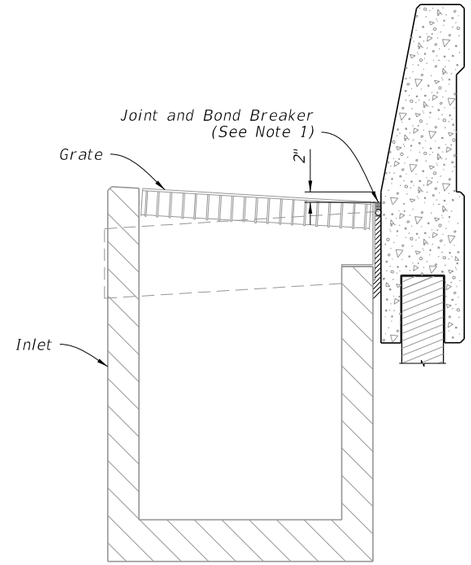

JUNCTION SLAB AND WALL COPING

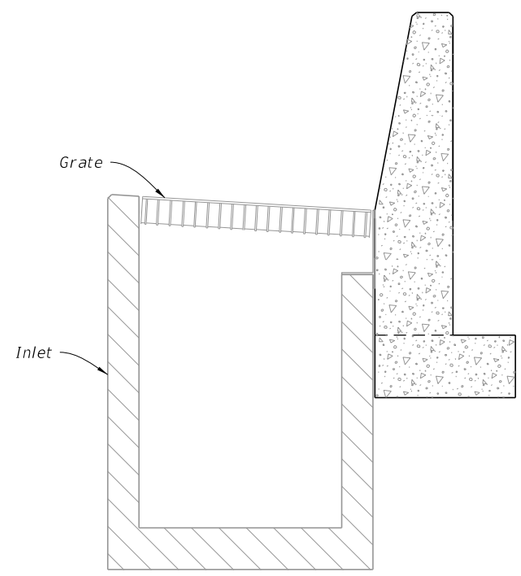

STEM AND FOOTING

BARRIER TYPE EXAMPLES

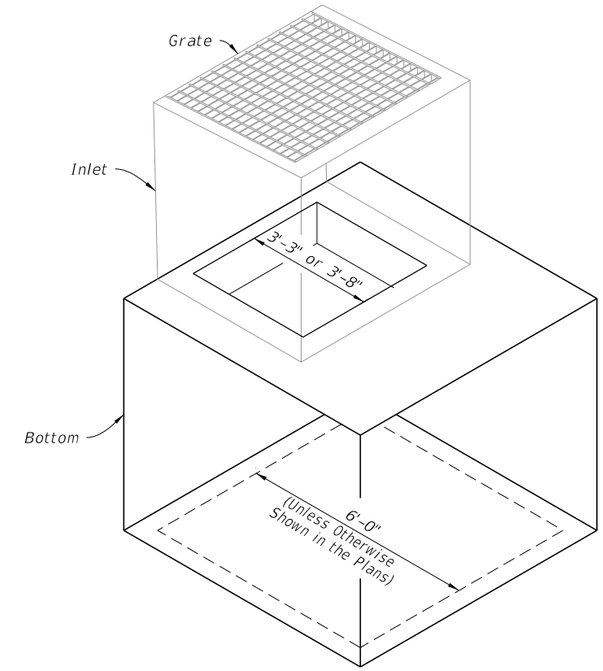

ALTERNATE B STRUCTURE BOTTOM

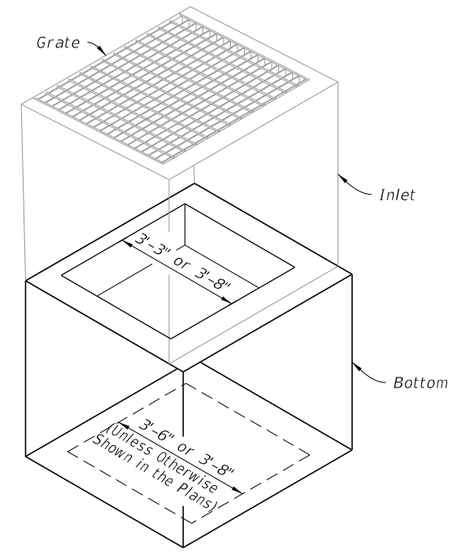

ALTERNATE B STRUCTURE BOTTOM

NOTE: Alt. B Structure Bottom Only. See Index 425-010

INLET WITH STRUCTURE BOTTOM

SHOULDER PAVEMENT WRAP, BARRIER TYPE EXAMPLES, AND STRUCTURE BOTTOMS

9/21/2021 1:46:19 PM

LAST REVISION	REVISION	DESCRIPTION:			INDEX	SHEET
11/01/20			FY 2022-23 STANDARD PLANS	ADJACENT BARRIER INLET	425-031	4 of 4

GENERAL NOTES:

1. Work this Index with Index 425-001 and Index 425-010.

2. Where called for in the Plans, use this inlet in conjunction with Curb and Gutter Barrier per Index 521-001. Construct Barrier segments shown herein in accordance with requirements of Index 521-001, including connections to adjacent barrier segments using the Doweled Joint.

3. Reinforcing shown is grade 60 steel bars. For the equivalent area of welded wire reinforcement for the inlet, see Index 425-001. Reinforcing shall have 2" minimum cover unless otherwise shown. Trim or bend bars to provide 1½" clearance around pipe openings.

   For Bar Bending Details of Bars 5V2 & 5U4, see Index 521-001. For all others, see Sheet 2.

4. Apply a ¾" chamfer or ¼" radius to all exposed concrete edges.

5. Grates may be fabricated with reticuline bars or with either ½"○ welded or ⅜"○ electroforged cross bars and bearing bars as detailed on Sheet 3.

6. All dimensions are for both precast and cast in place (C-I-P) inlets unless otherwise indicated.

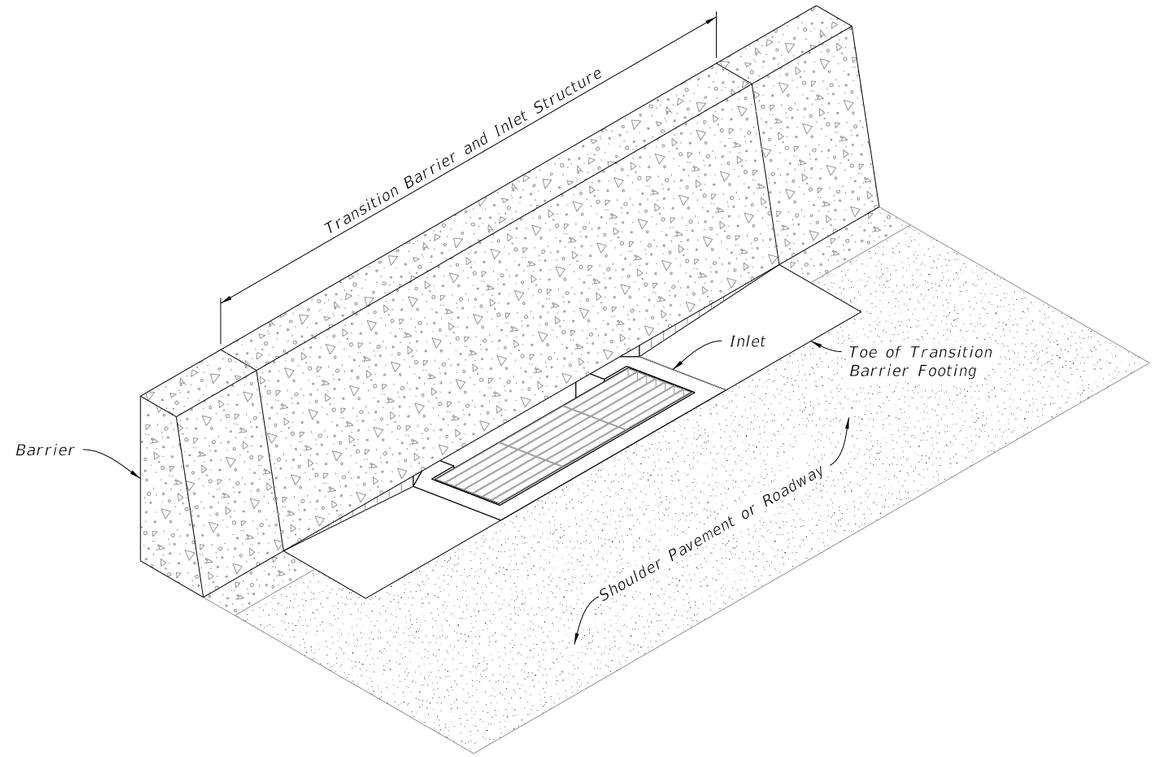

CURB AND GUTTER BARRIER INLET

TABLE OF CONTENTS:

Sheet	Description
1	General Notes and Contents
2	Dimensional, Reinforcing, and Bar Bending
3	Transitional Dimensional, Reinforcing, and Grate Details
4	Inlet Top Dimensional and Reinforcing Details

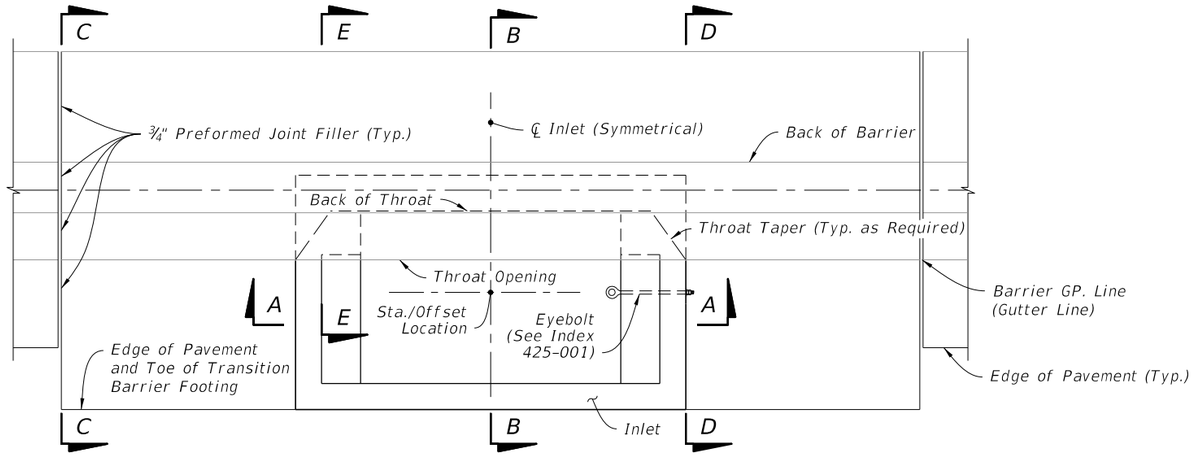

PLAN

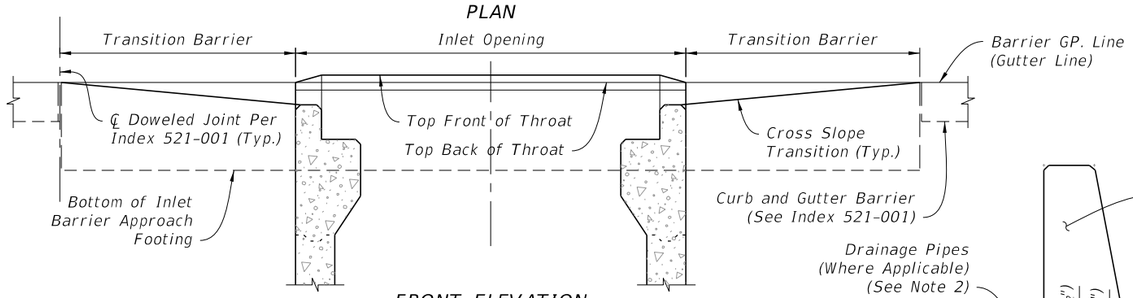

FRONT ELEVATION

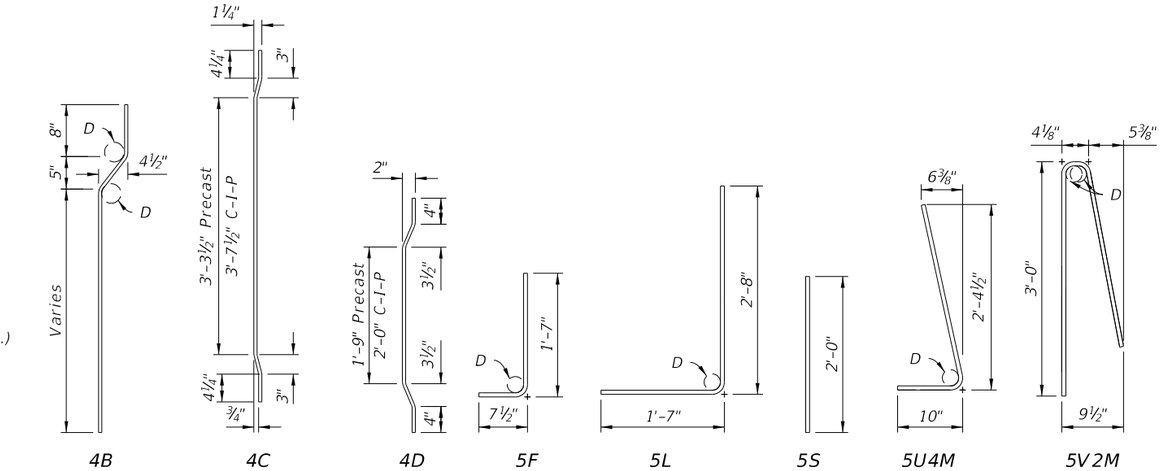

BAR BENDING DIAGRAMS

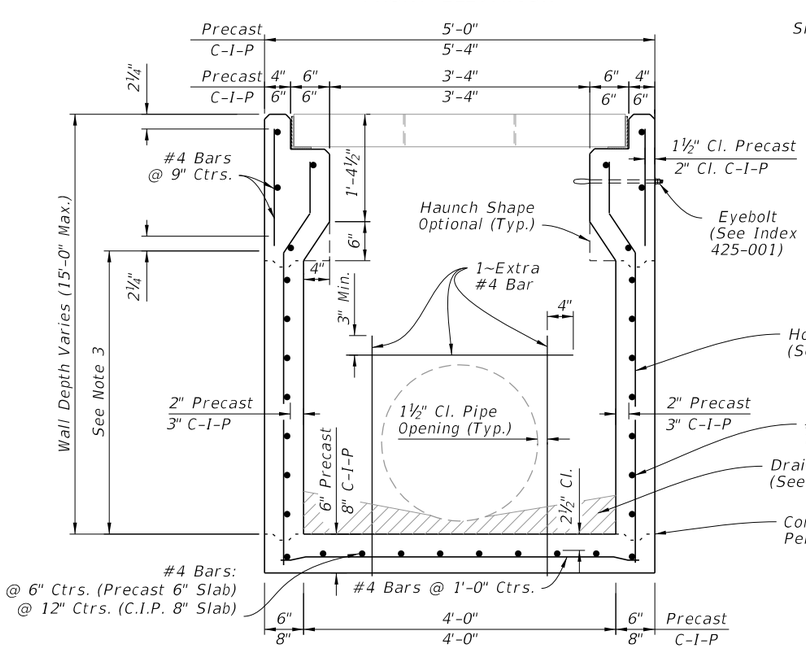

SECTION A-A
(Pipe Opening Shown)

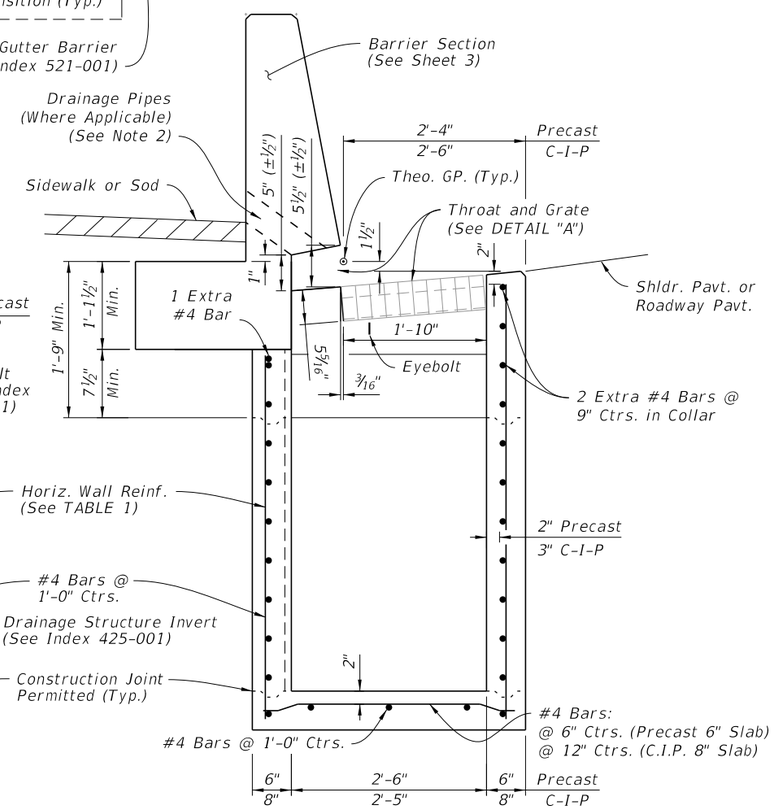

SECTION B-B
(Pipe Opening Not Shown)

DIMENSIONAL AND REINFORCING

TABLE 1: HORIZONTAL WALL REINFORCING SCHEDULE					
WALL DEPTH		SCHEDULE	AREA (in.²/ft.)	MAX. SPACING	
Precast	C-I-P			BARS	WWR
0'-3'	0'-4'	A12	0.20	12"	8"
3'-6'	4'-9'	A6	0.20	6"	5"
6'-10'	9'-15'	B5.5	0.24	5½"	5"
10'-15'	-	C6.5	0.37	6½"	6"

NOTES:

1. For Bar Bending Diagrams of Bars 5V2 & 5U4, See Index 521-001. Bars 5V2M, 5U4M, & 5S may be field cut from Bars 5V2 & 5U4.
2. Install PVC Drainage Pipes at the inlet centerline when the inlet is located in a sag curve or when drainage pipes are called for in the plans. Install a quantity of 3 ~ 3½"℄ (I.D.) NPS Schedule 40 Pipes longitudinally spaced at 8", with the center pipe as near to the inlet centerline as practical without conflicting with the steel reinforcing.
3. Construction joints permitted between these limits. See Index 425-001 for minimum dimensions.

DIMENSIONAL, REINFORCING AND BAR BENDING

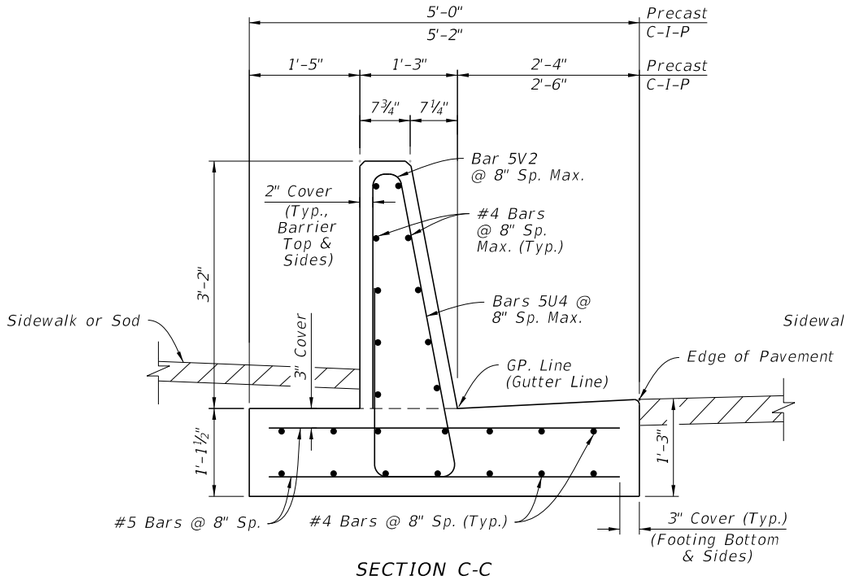

SECTION C-C
TRANSITION BARRIER BEGIN CROSS-SLOPE TRANSITION
(Align With Curb And Gutter Barrier, See Index 521-001)

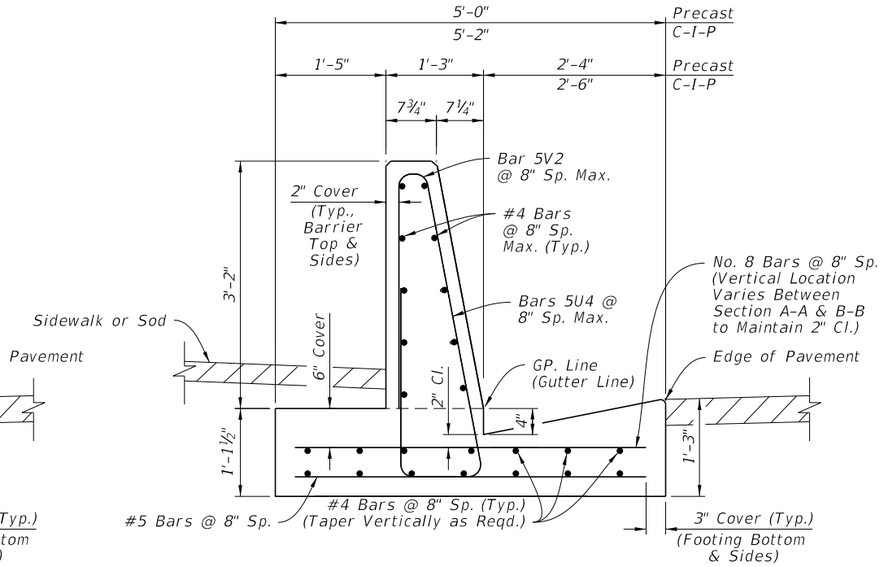

SECTION D-D
TRANSITION BARRIER END CROSS-SLOPE TRANSITION
(Align With Inlet Structure)

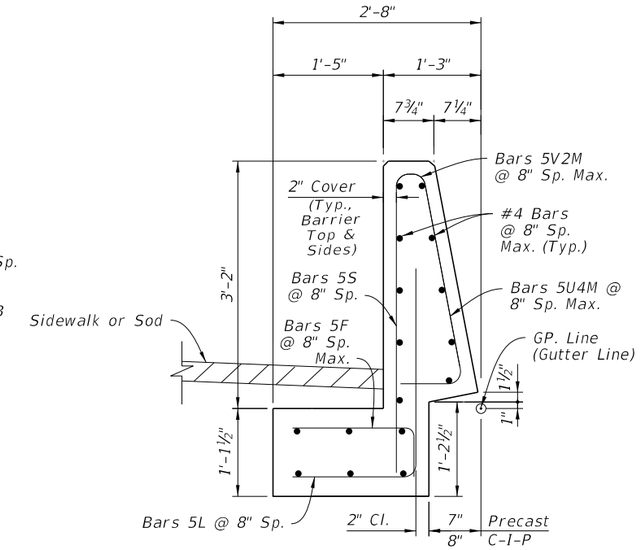

SECTION E-E
BARRIER OVER INLET STRUCTURE
(Throat Fully Transitioned)

TRANSITIONAL DIMENSIONAL AND REINFORCING

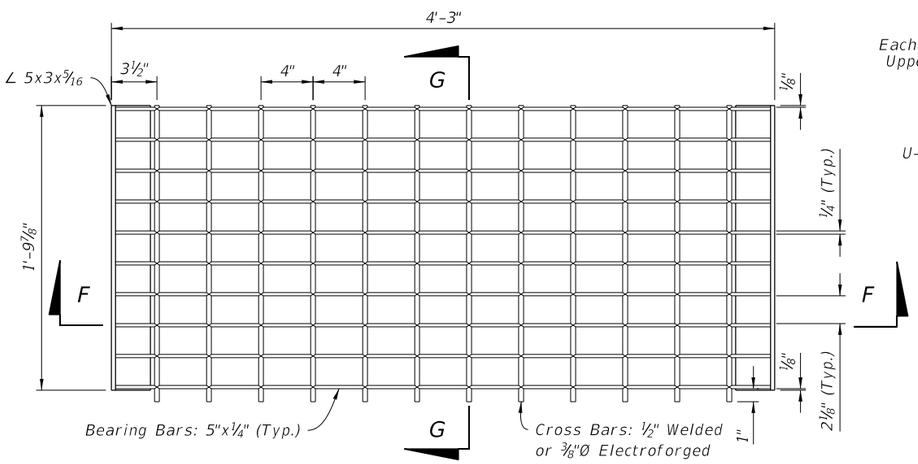

PLAN

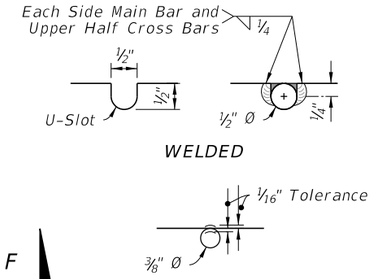

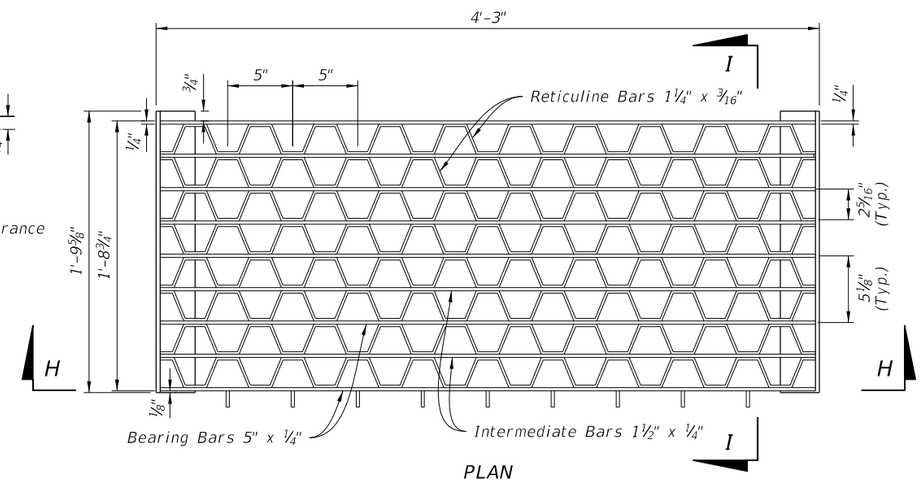

PLAN

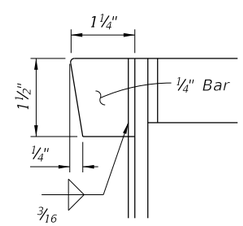

STUB BAR
DETAIL "C"

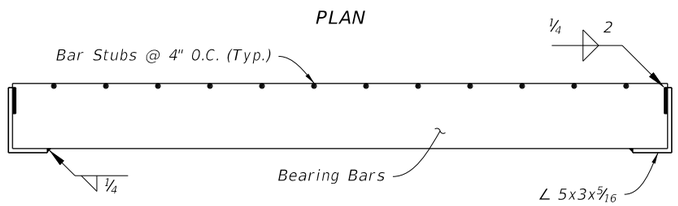

SECTION F-F

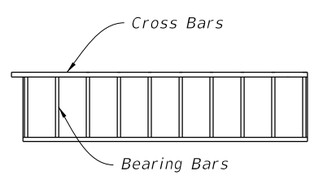

SECTION G-G

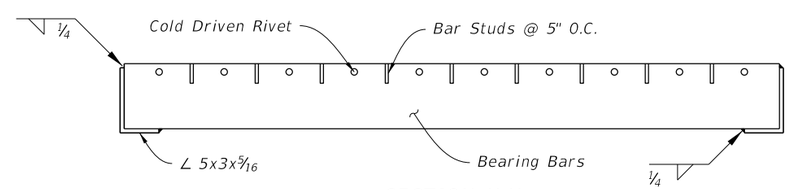

SECTION H-H

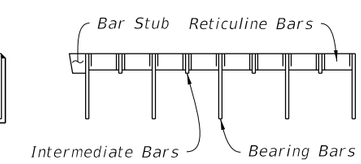

SECTION I-I

CROSS BAR GRATE

RETICULINE GRATE

TRANSITIONAL DIMENSIONAL, REINFORCING AND GRATE DETAILS

LAST REVISION	REVISION	DESCRIPTION:			INDEX	SHEET
11/01/20			FDOT FY 2022-23 STANDARD PLANS	CURB AND GUTTER BARRIER INLET	425-032	3 of 4

9/21/2021 1:46:22 PM

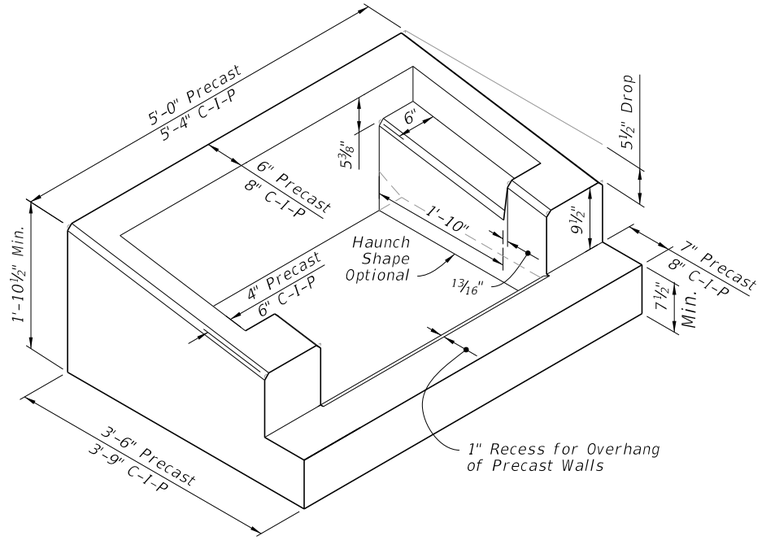

INLET COLLAR

ISOMETRIC VIEW

(Grate Not Shown)

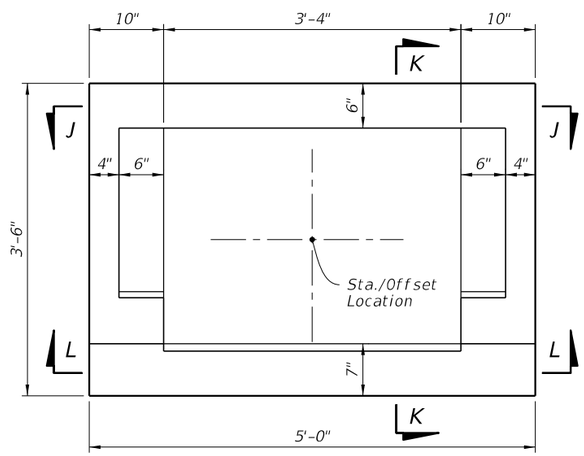

PLAN

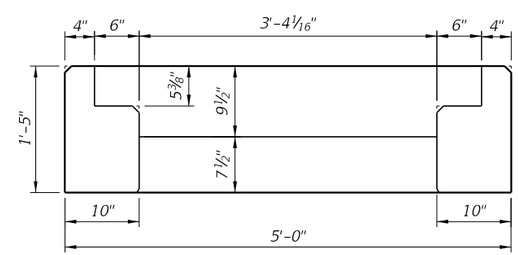

SECTION L-L

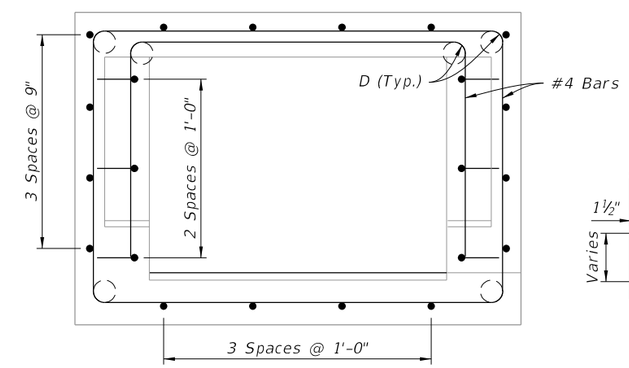

PLAN

NOTE:
See BAR BENDING DIAGRAMS on Sheet 3 for additional information on Bar 4B.

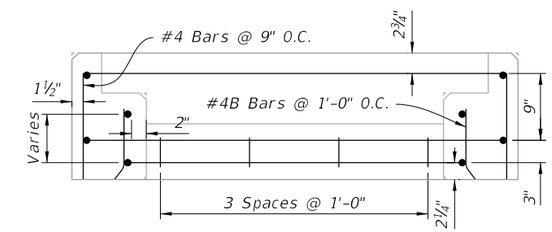

SECTION L-L

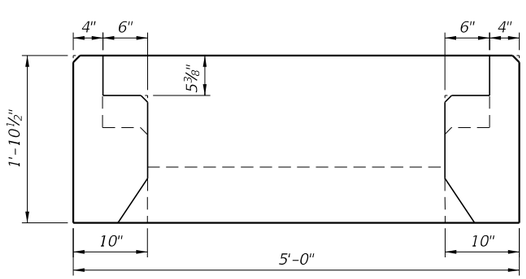

SECTION J-J

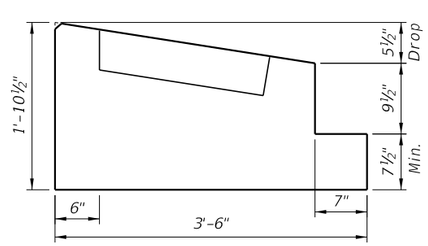

SECTION K-K

DIMENSIONAL DETAILS

(Precast Shown, C-I-P Similar)

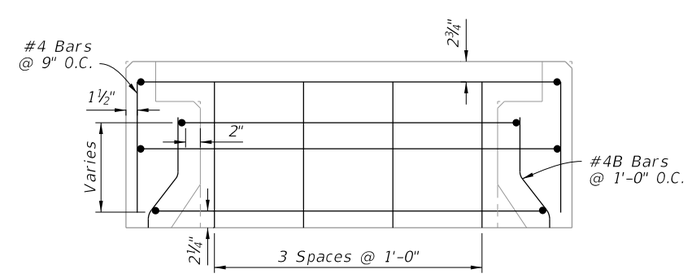

SECTION J-J

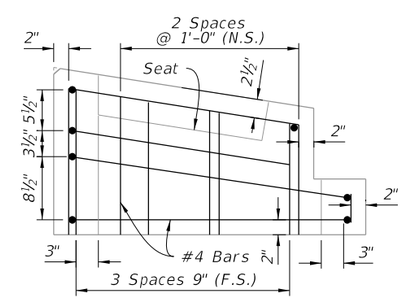

SECTION K-K

REINFORCING DETAILS

(Precast Shown, C-I-P Similar)

INLET TOP DIMENSIONAL AND REINFORCING DETAILS

LAST REVISION	REVISION	DESCRIPTION:			INDEX	SHEET
11/01/20			FY 2022-23 STANDARD PLANS	CURB AND GUTTER BARRIER INLET	425-032	4 of 4

9/21/2021 1:46:24 PM

GENERAL NOTES:

1. Work this Index with Index 425-001 and Index 425-010.

2. Use Grade 60 reinforcing bars with 2" minimum cover unless otherwise noted. See Index 425-001 for equivalent area of welded wire fabric. Cut or bend bars to provide 1½" minimum clearance around pipe.

3. Chamfer all exposed edges and corners ¾" or tool to ¼" radius.

4. Dimensions are for both precast and cast-in-place inlets unless otherwise noted.

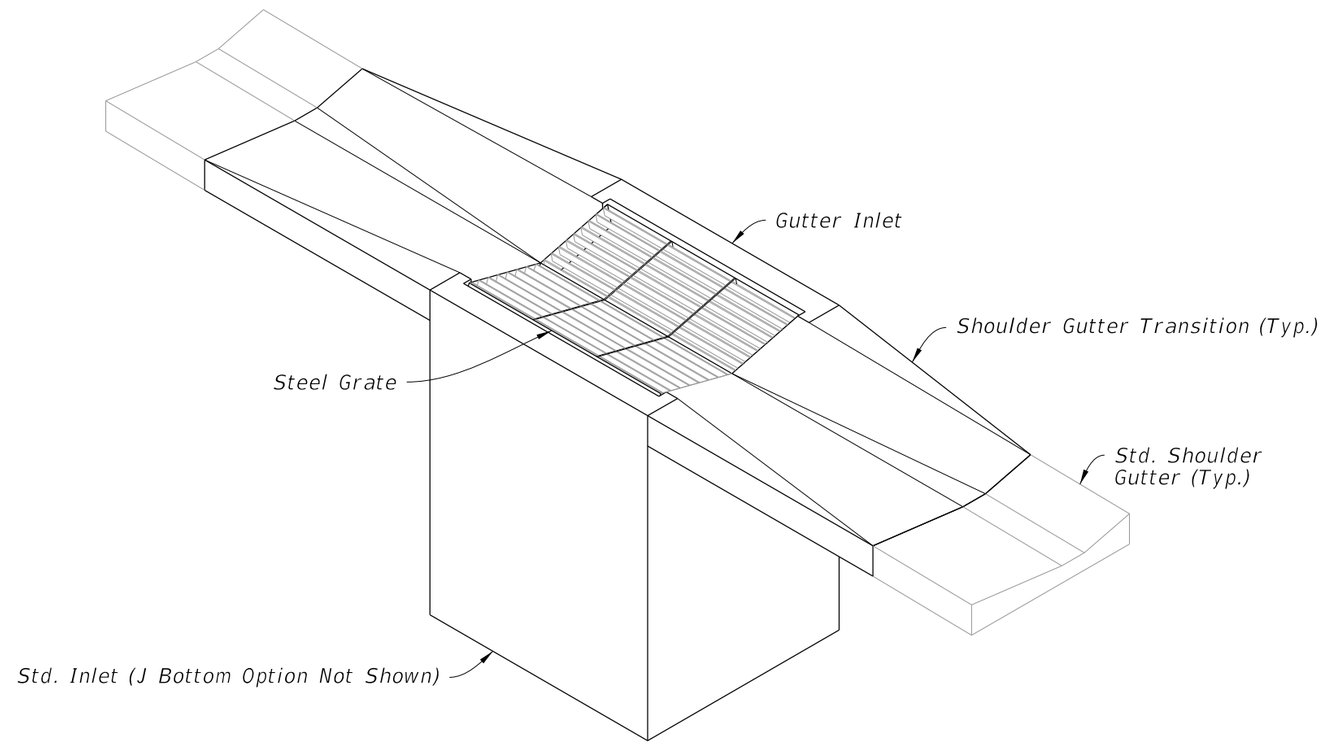

TABLE OF CONTENTS:

Sheet	Description
1	General Notes and Contents
2	Dimensional and Reinforcing Details
3	Transition and Apron Details
4	Steel Grate Details
5	Alternate A Structure Bottom - Top Slab Details

GUTTER INLET TYPE S

(Pipe Opening Not Shown)

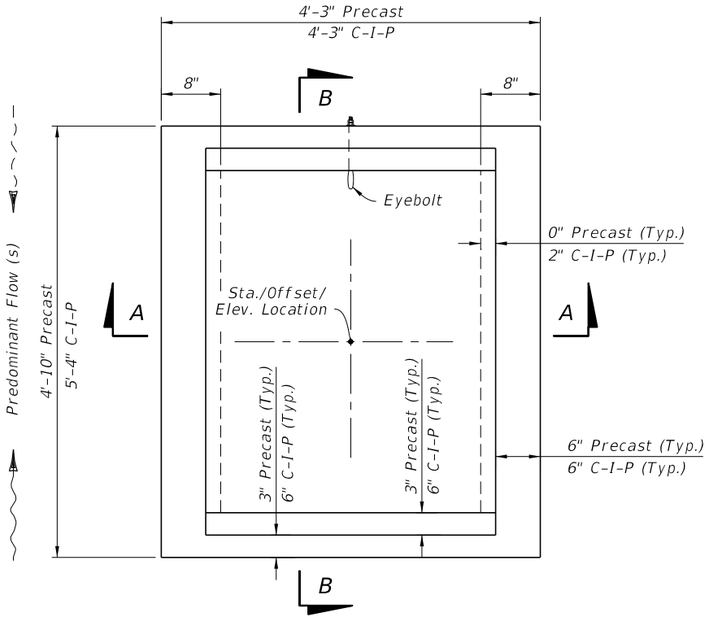

PLAN

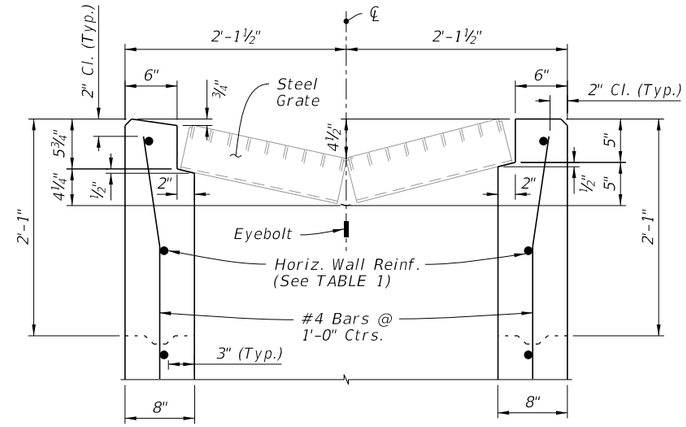

DETAIL "A"

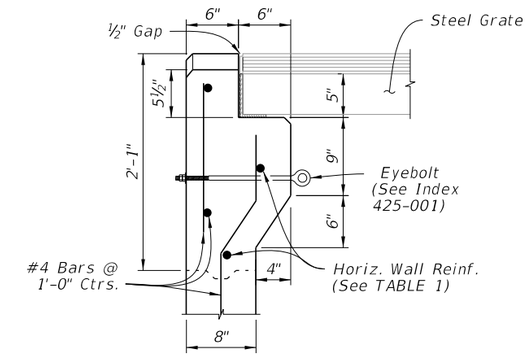

DETAIL "B"

CAST-IN-PLACE OPTION

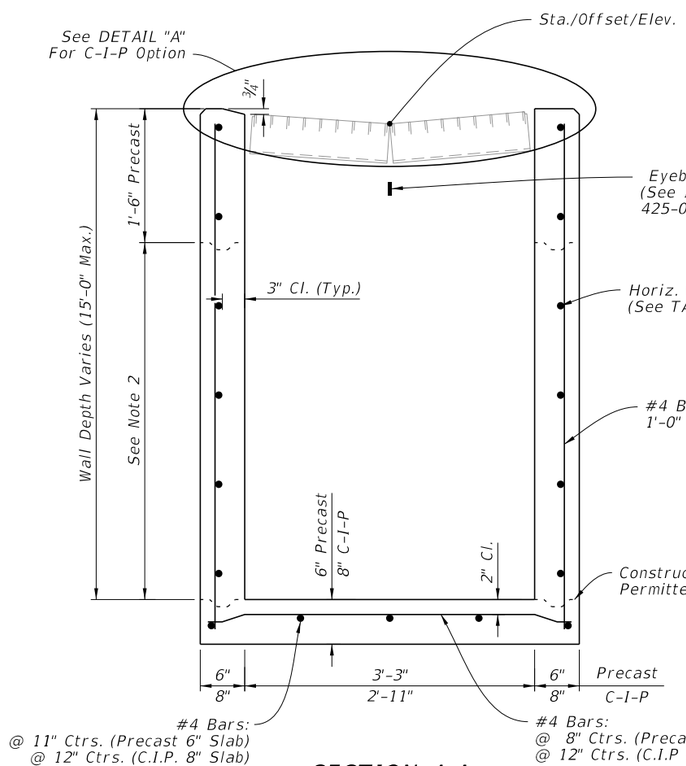

SECTION A-A
(Pipe Opening Not Shown)

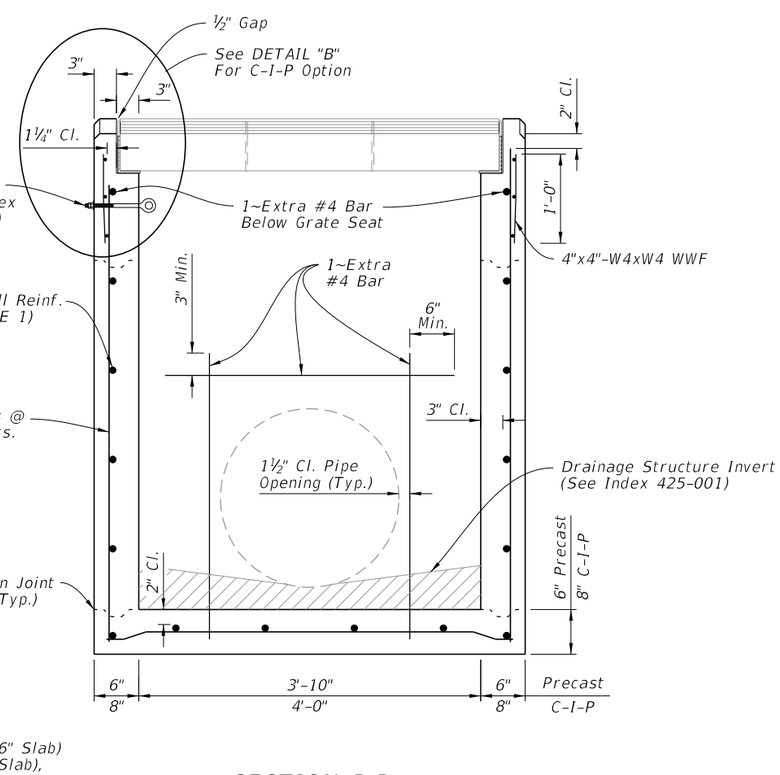

SECTION B-B
(Pipe Opening Shown)

TABLE 1
HORIZONTAL WALL REINFORCING SCHEDULE

WALL DEPTH	SCHEDULE	AREA (in.²/ft.)	MAX. SPACING	
			BARS	WWR
0' - 5'	A12	0.20	12"	8"
5' - 9'	A6	0.20	6"	5"
9' - 12'	A4	0.24	4"	3"
9' - 15'	B5.5	0.24	5½"	5"

NOTES:

1. Concrete Apron/Transition not shown.
2. Construction joints permitted between these limits. See Index 425-001 for minimum dimensions.

DIMENSIONAL AND REINFORCING DETAILS

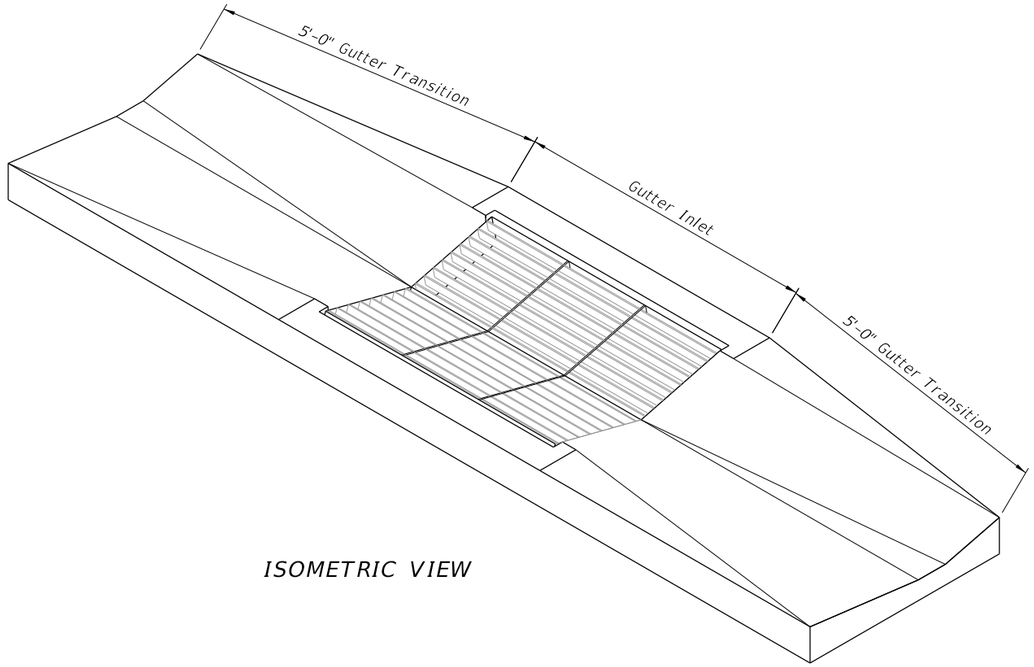

ISOMETRIC VIEW

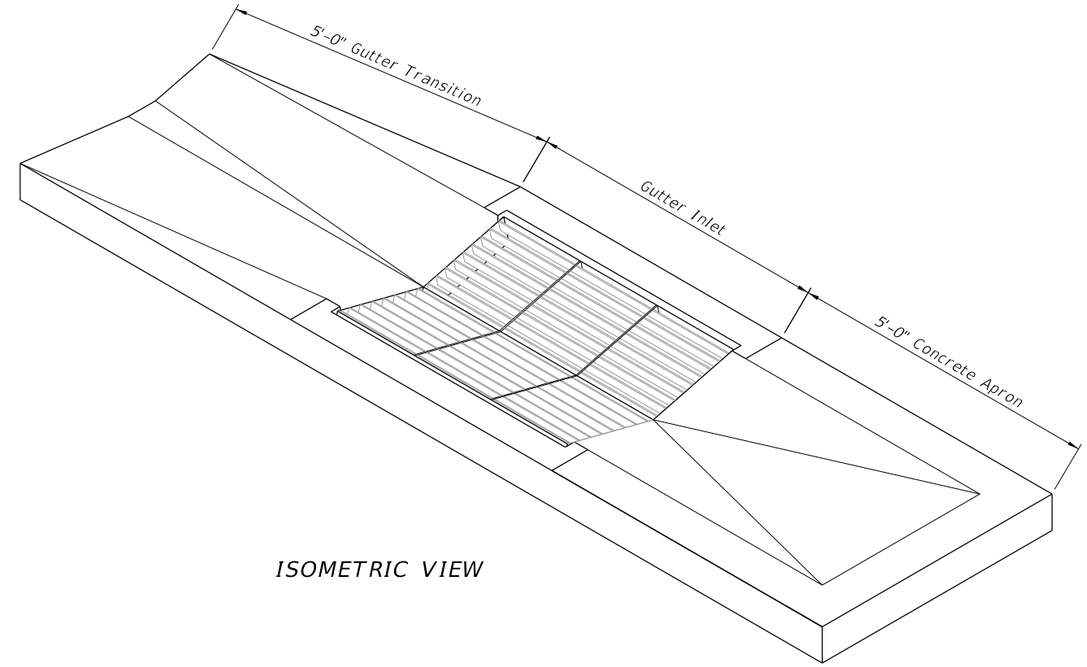

ISOMETRIC VIEW

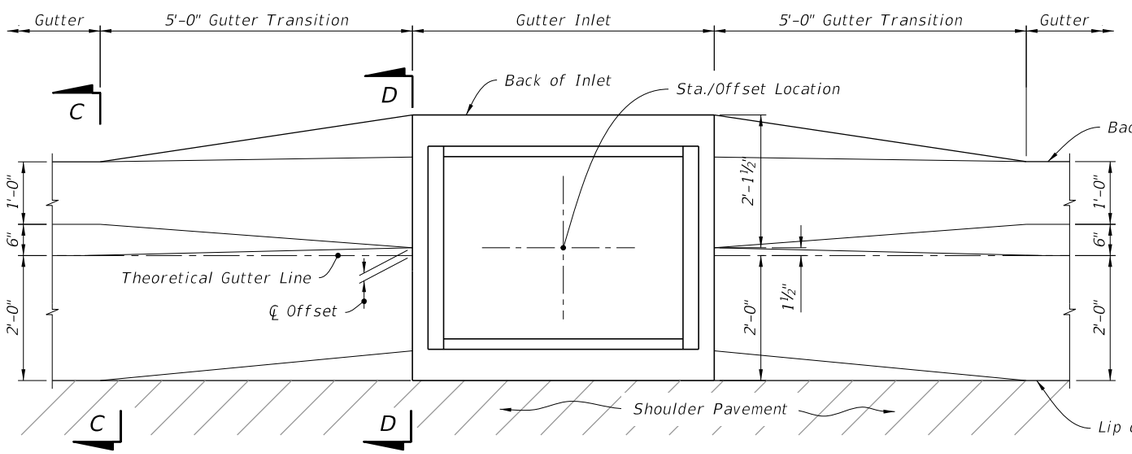

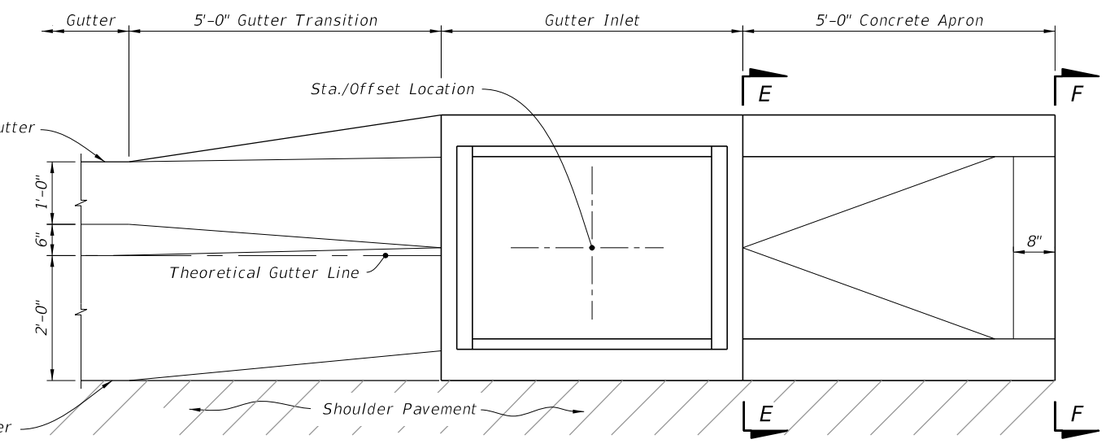

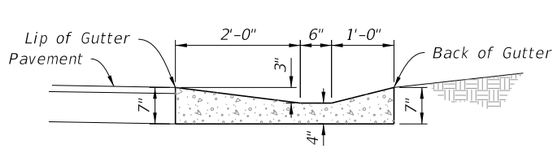

SECTION C-C

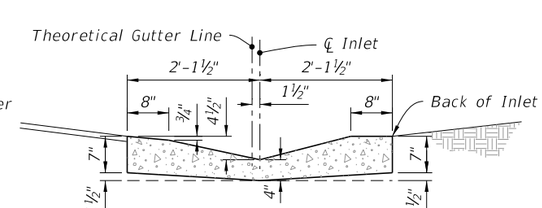

SECTION D-D

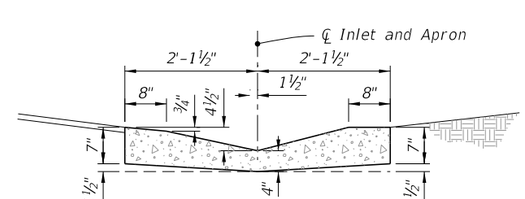

SECTION E-E

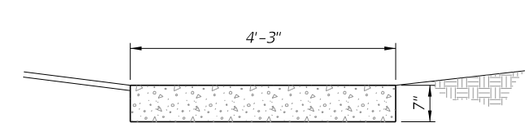

SECTION F-F

SHOULDER GUTTER TRANSITION

APRON AT TERMINAL INLETS

TRANSITION AND APRON DETAILS

9/21/2021 1:46:26 PM

LAST REVISION	REVISION	DESCRIPTION:			INDEX	SHEET
11/01/20			FY 2022-23 STANDARD PLANS	GUTTER INLET TYPE S	425-040	3 of 5

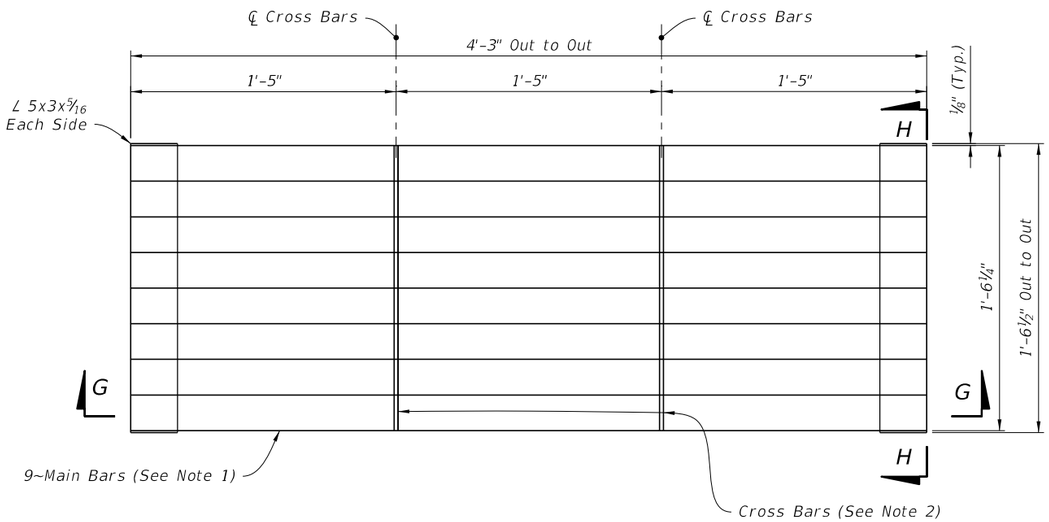

PLAN

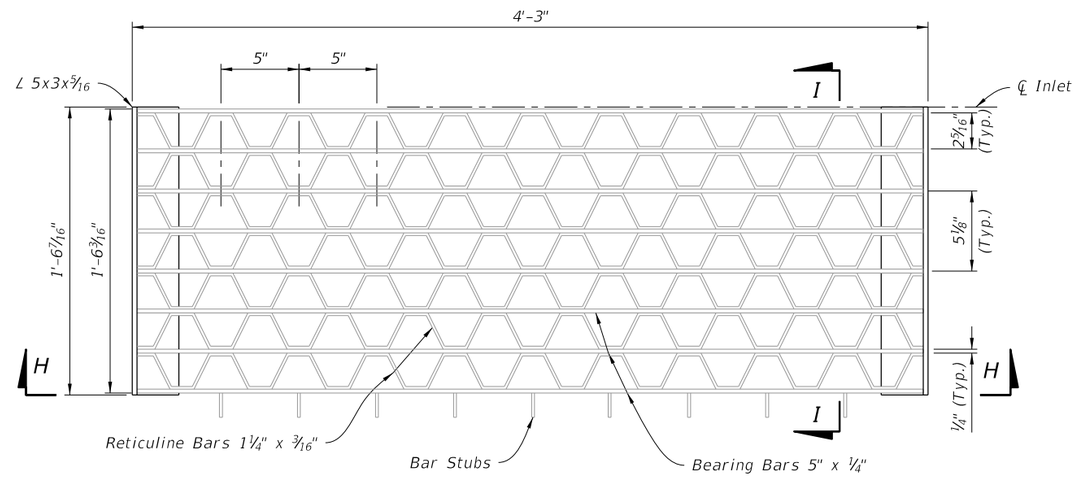

PLAN

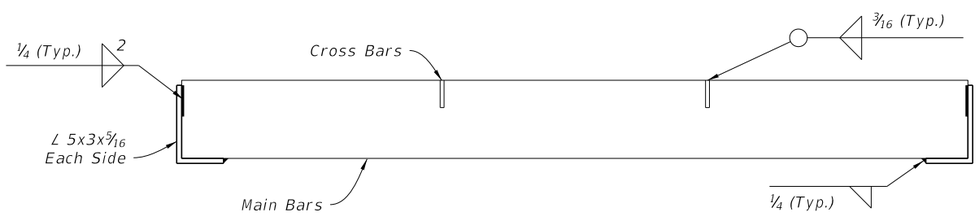

SECTION G-G

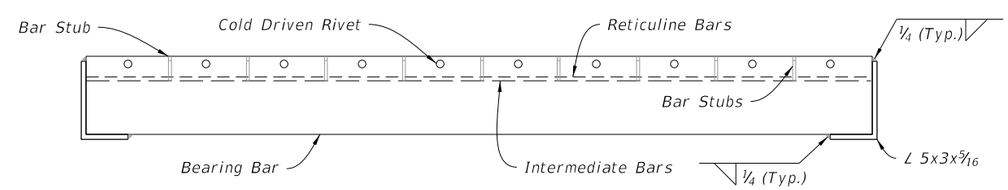

SECTION H-H

NOTES:

1. Main Bars are 5"x1/4", notched for Cross Bars, and spaced equally apart.
2. Cross Bars are 1 3/4"x1/4" and continuously welded at Main Bar Notches.
3. Main Bars and Cross Bars are flush on top.

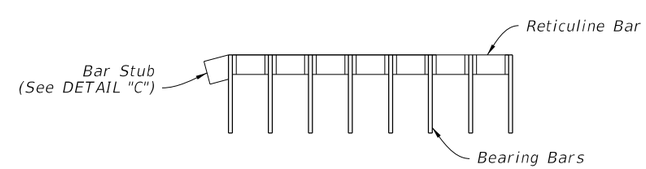

SECTION I-I

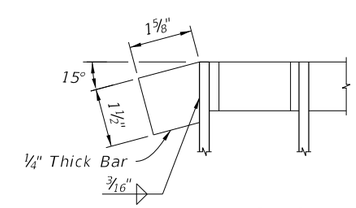

DETAIL "C"

PARALLEL BARS

RETICULINE BARS

STEEL GRATE DETAILS

LAST REVISION	REVISION	DESCRIPTION:			INDEX	SHEET
11/01/20			FY 2022-23 STANDARD PLANS	GUTTER INLET TYPE S	425-040	4 of 5

9/21/2021 1:46:27 PM

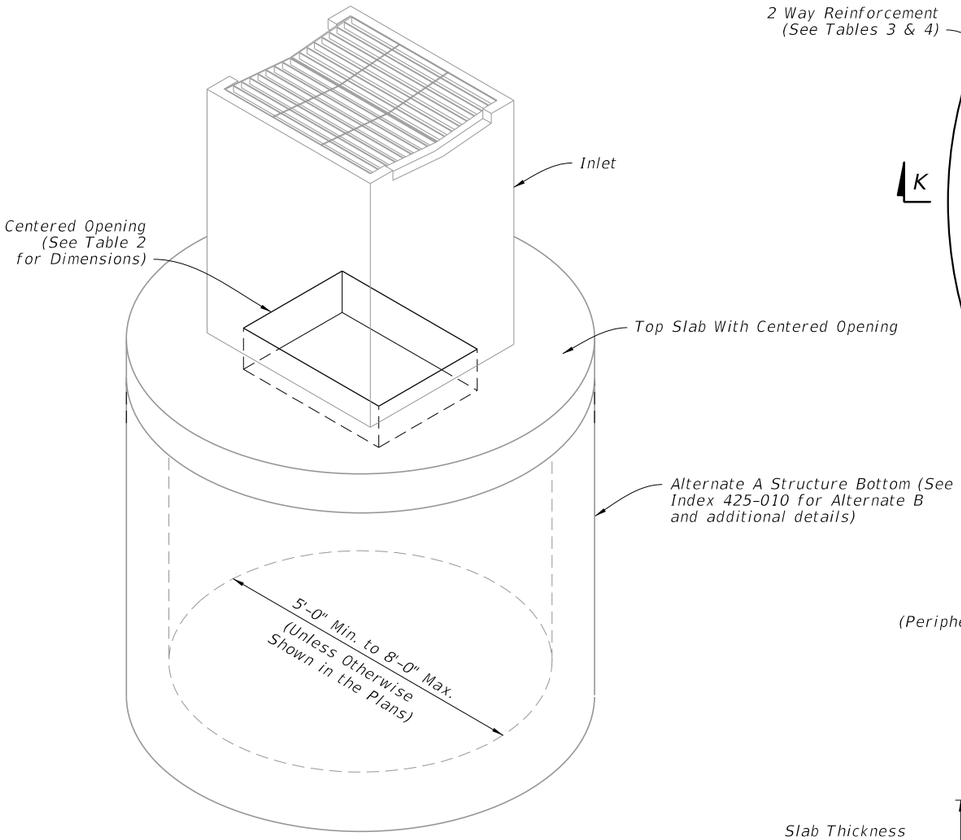

ISOMETRIC VIEW

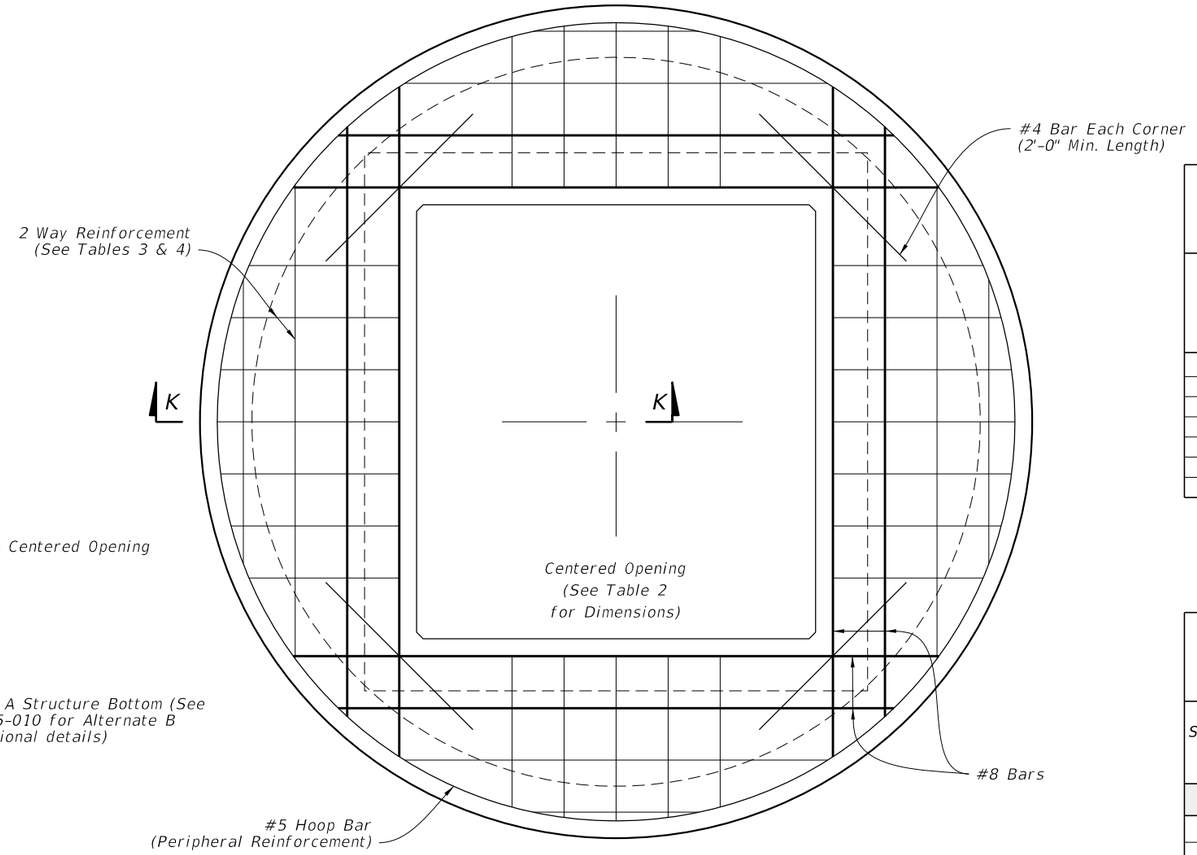

PLAN

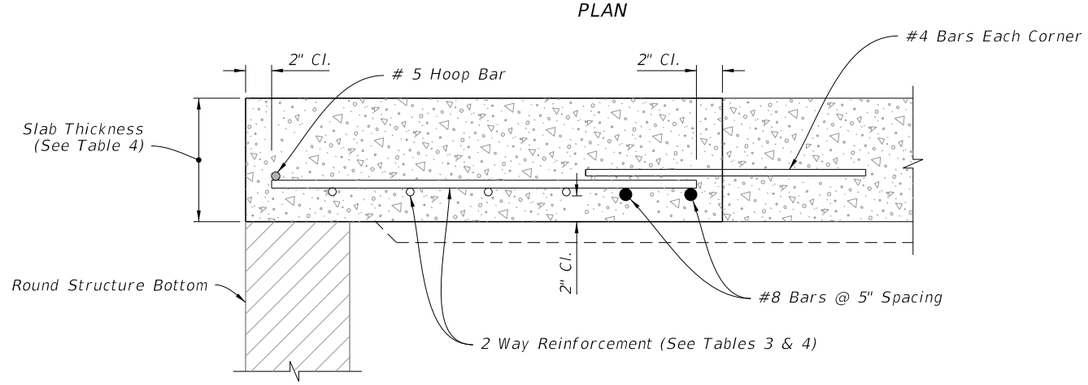

SECTION K-K

TOP SLAB REINFORCEMENT DETAILS

TABLE 2 TOP SLAB OPENING		
DIAMETER	OPENING SIZE	
	Min.	Max.
5'-0" to 8'-0"	2'-11" x 4'-0"	3'-3" x 3'-10"

TABLE 3 TOP SLAB REINFORCING SCHEDULE	
SCHEDULE	GRADE 60 (BAR) OR 65 KSI & 70 KSI (WIRE FABRIC) In.²/ft.
A	0.20
B	0.24
C	0.37
D	0.53
E	0.73
F	1.06
G	1.45

TABLE 4 TOP SLAB WITH CENTERED OPENING		
STRUCTURE DEPTH	SLAB THICKNESS	REINFORCING (2 WAY) SCHEDULE
SIZE: 5'-0"		
≥0.5'<30'	9½"	C
30'<40'	9½"	D
SIZE: 6'-0"		
≥0.5'<8'	9½"	B
8'<18'	9½"	C
18'<30'	9½"	D
30'<37'	9½"	E
37'-40'	9½"	G
SIZE: 8'-0"		
≥0.5'<9'	11½"	C
9'<15'	11½"	D
15'<23'	11½"	E
23'<33'	11½"	E
33'-40'	11½"	G

ALTERNATE A STRUCTURE BOTTOM - TOP SLAB DETAILS

GENERAL NOTES:

1. Work this Index with Index 425-001 and Index 425-010.

2. All reinforcing is Grade 60 bars with 2" min. cover unless otherwise noted. See Index 425-001 for equivalent area of welded wire fabric. Cut or bend bars out of way of pipe to clear pipe 1½".

3. Chamfer all exposed edges and corners ¾" or tool to ¼" radius.

4. Dimensions are for both precast and cast-in-place inlets unless otherwise noted.

TABLE OF CONTENTS:

Sheet	Description
1	General Notes and Contents
2	Dimensional and Reinforcing Details
3	Steel Grate Details
4	Alternate A Structure Bottom - Top Slab Details

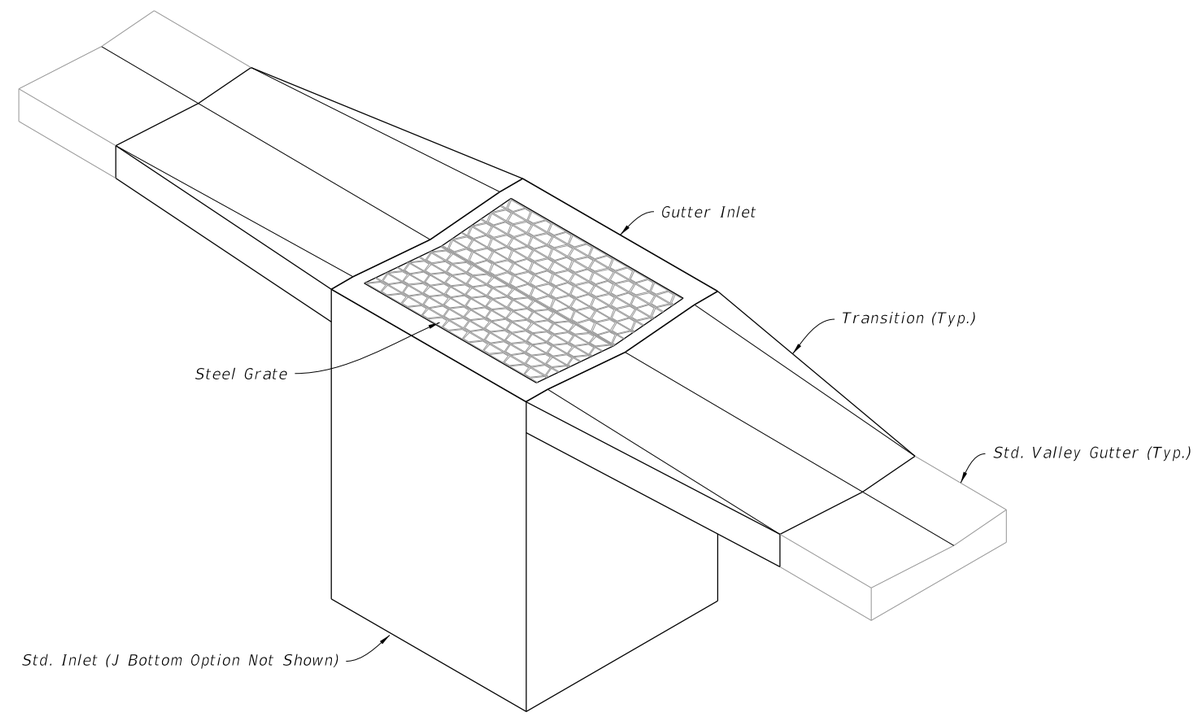

GUTTER INLET TYPE V

(Pipe Opening Not Shown)

9/21/2021 1:46:29 PM

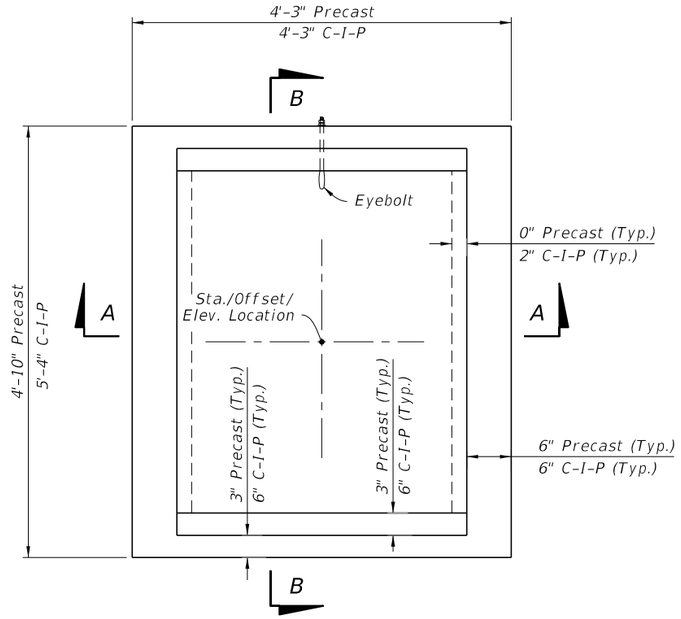

PLAN

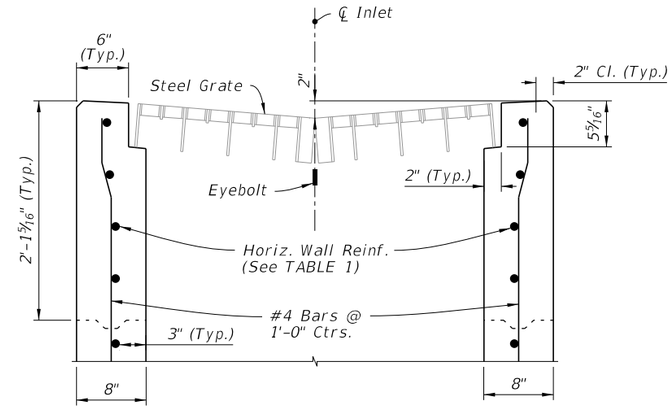

DETAIL "A"

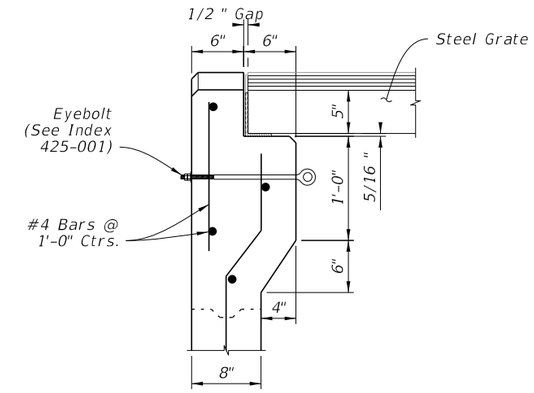

DETAIL "B"

CAST-IN-PLACE OPTION

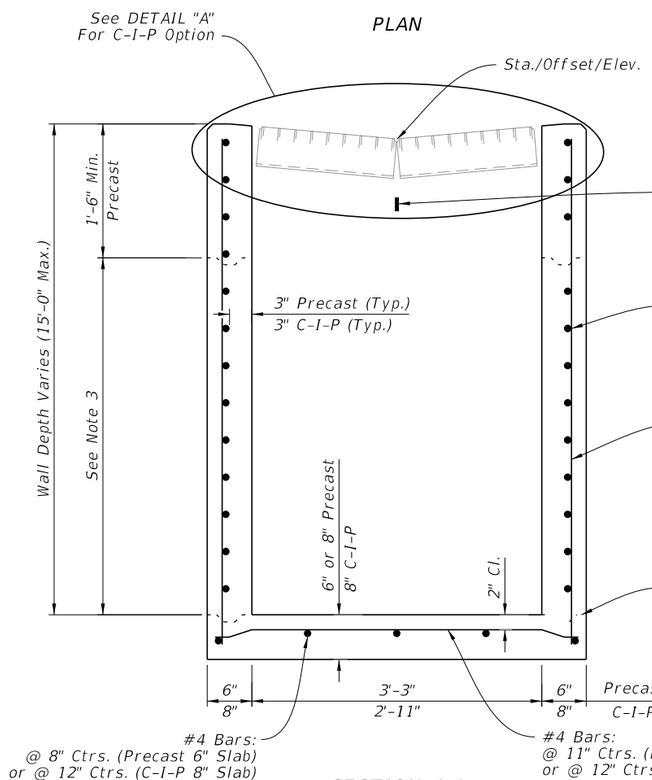

SECTION A-A
(Pipe Opening Not Shown)

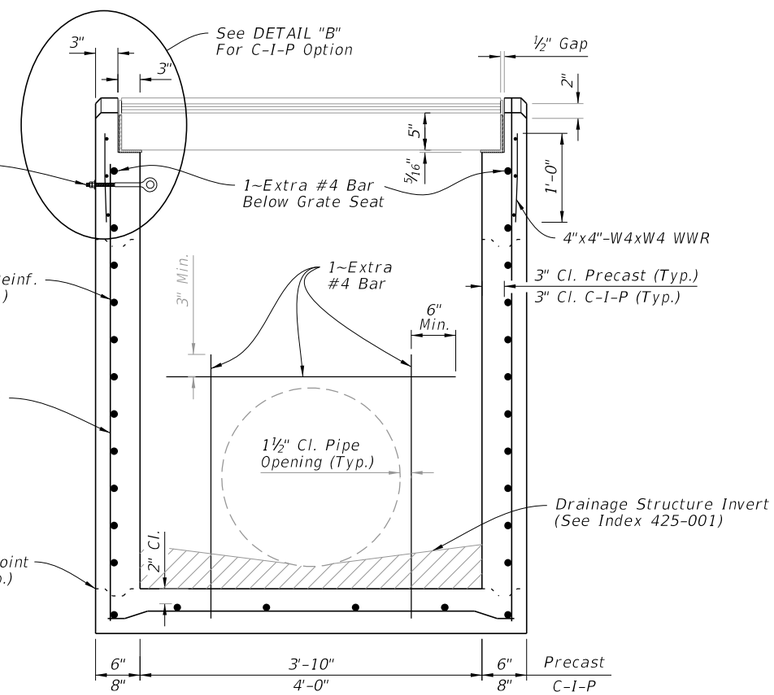

SECTION B-B
(Pipe Opening Shown)

DIMENSIONAL AND REINFORCING DETAILS

TABLE 1
HORIZONTAL WALL REINFORCING SCHEDULE

WALL DEPTH	SCHEDULE	AREA (in.²/ft.)	MAX. SPACING	
			BARS	WWR
0' - 5'	A12	0.20	12"	8"
5' - 9'	A6	0.20	6"	5"
9' - 12'	A4	0.20	4"	3"
9' - 15'	B5.5	0.24	5½"	5"

NOTES:

1. Plan View: Grate, Concrete Ditch Pavement, and Sod not shown on structure detail.
2. Precast Shown, Cast-In-Place (C-I-P) similar.
3. Construction joints permitted between these limits. See Index 425-001 for minimum dimensions.

DIMENSIONAL AND REINFORCING DETAILS

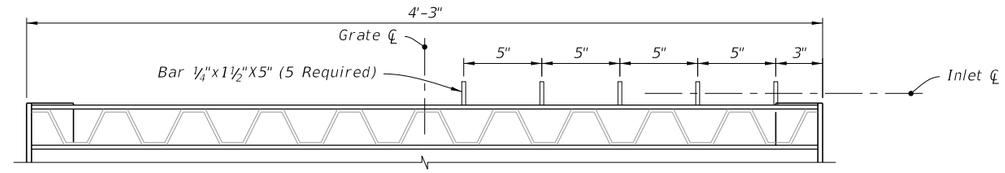

OPTIONAL BAR SPACING

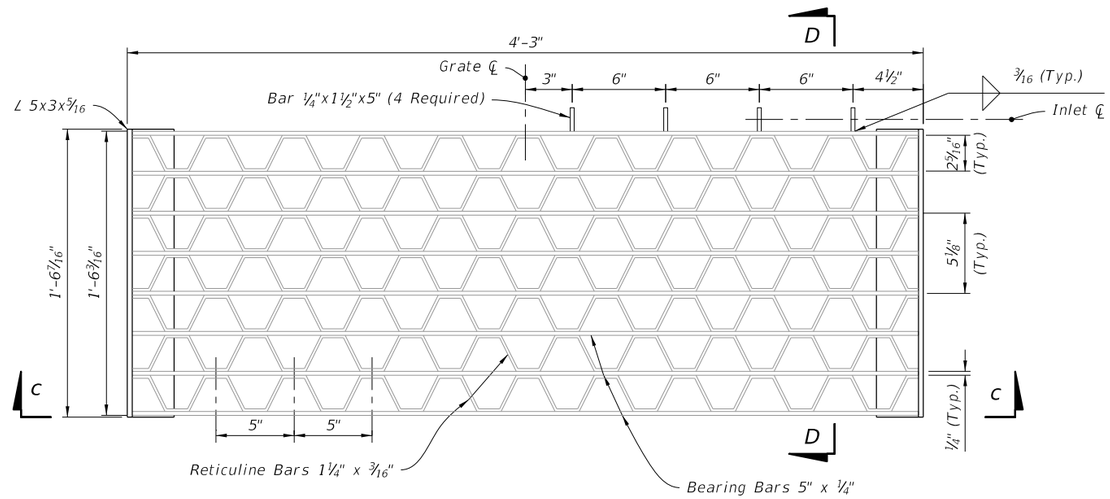

PLAN

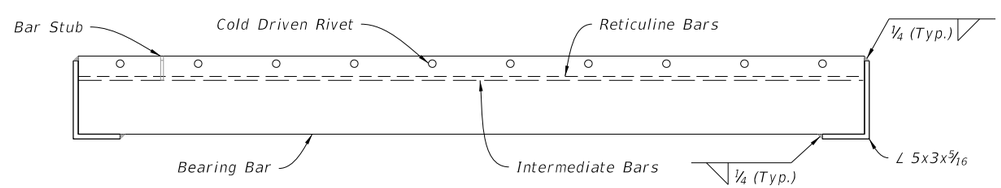

SECTION C-C

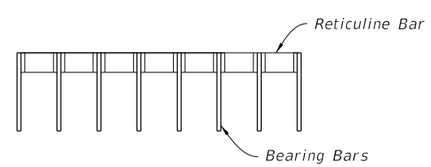

SECTION D-D

RETICULINE GRATE DETAIL

(Two Grates Required per Inlet)

STEEL GRATE DETAILS

LAST REVISION	REVISION	DESCRIPTION:			INDEX	SHEET
11/01/20			FY 2022-23 STANDARD PLANS	GUTTER INLET TYPE V	425-041	3 of 4

9/21/2021 1:46:30 PM

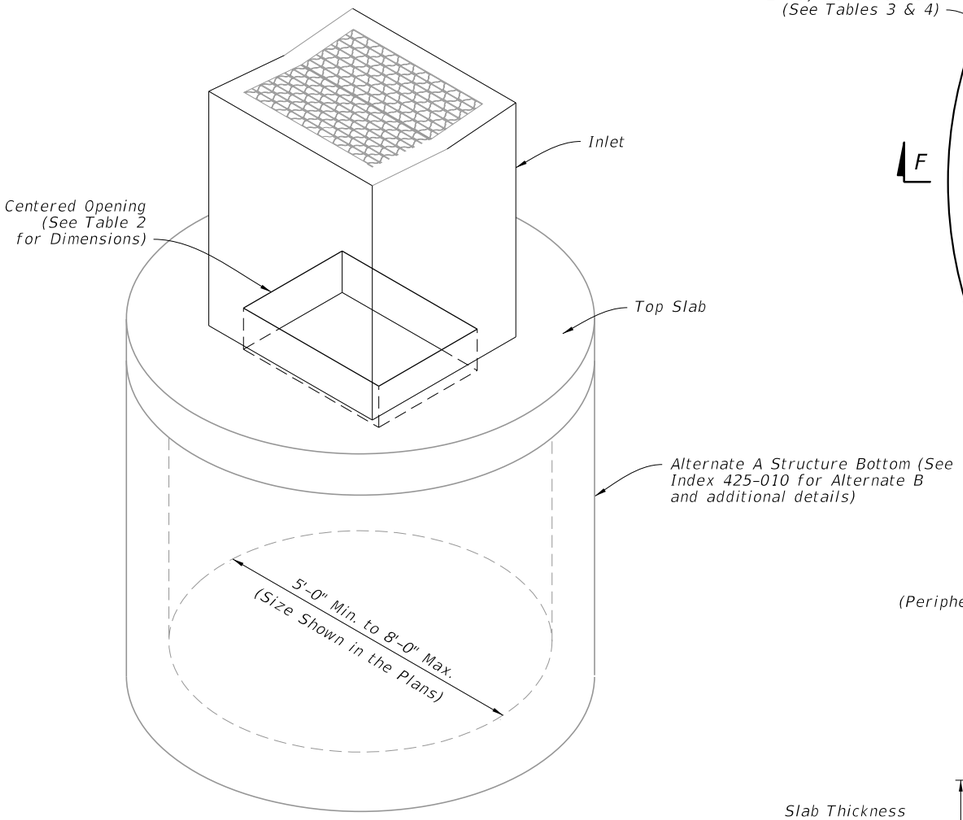

ISOMETRIC VIEW

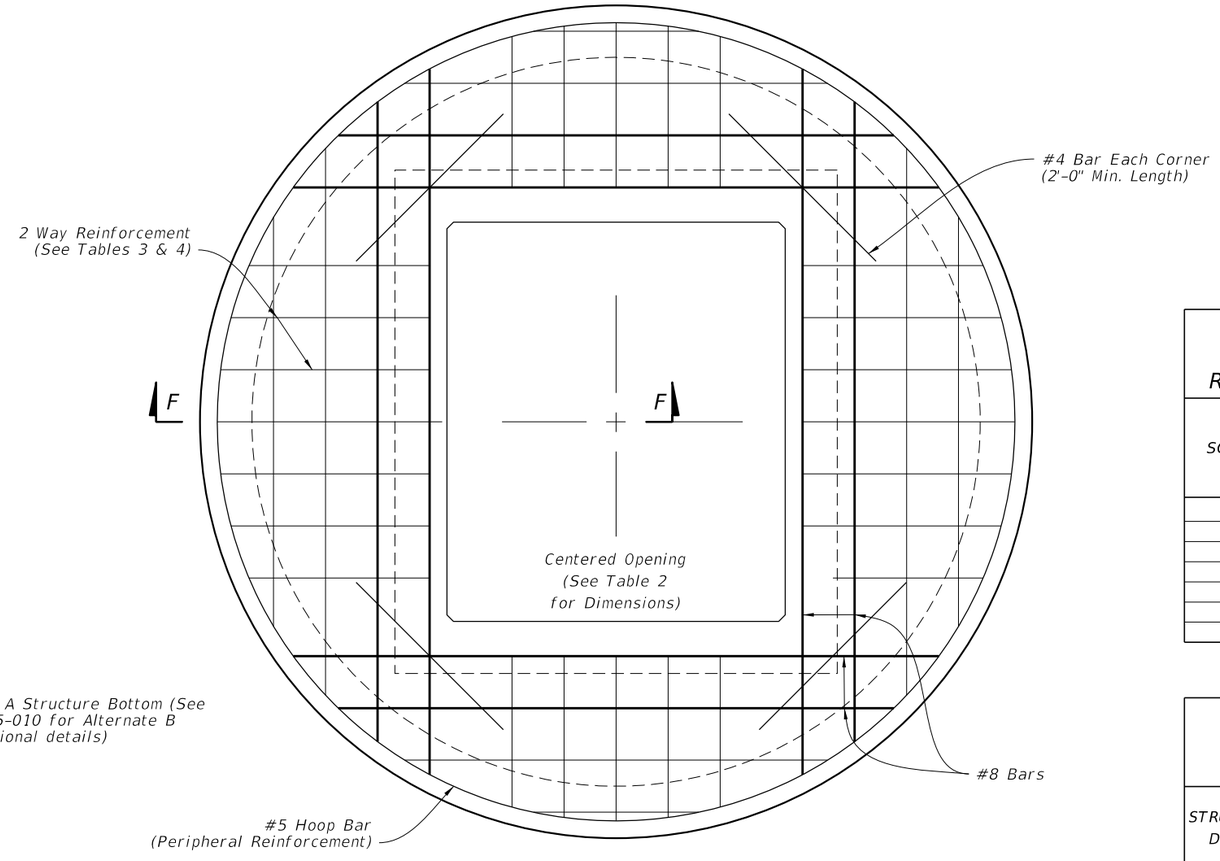

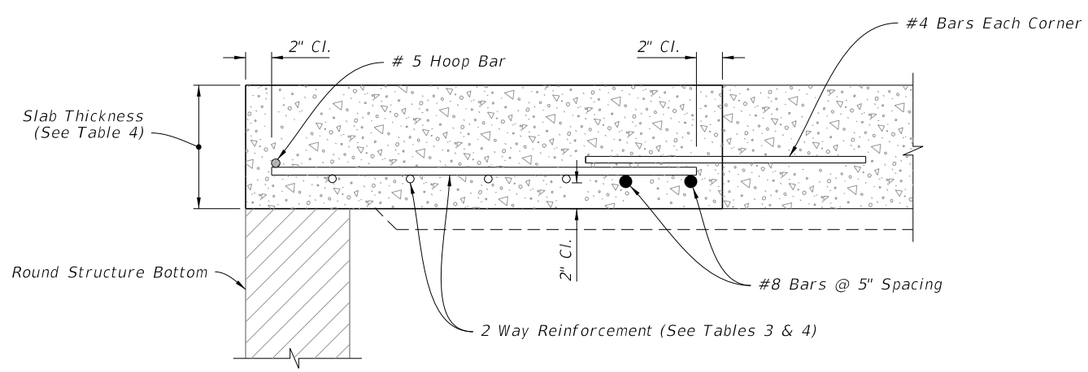

SECTION F-F

TOP SLAB REINFORCEMENT DETAILS

TABLE 2 TOP SLAB OPENING		
DIAMETER	OPENING SIZE	
	Min.	Max.
5'-0" to 8'-0"	2'-11" x 4'-0"	3'-3" x 3'-10"

TABLE 3 TOP SLAB REINFORCING SCHEDULE	
SCHEDULE	GRADE 60 (BAR) OR 65 KSI & 70 KSI (WIRE FABRIC) In.²/ft.
A	0.20
B	0.24
C	0.37
D	0.53
E	0.73
F	1.06
G	1.45

TABLE 4 TOP SLAB WITH CENTERED OPENING		
STRUCTURE DEPTH	SLAB THICKNESS	REINFORCING (2 WAY) SCHEDULE
SIZE: 5'-0"		
≥0.5'<30'	9½"	C
30'<40'	9½"	D
SIZE: 6'-0"		
0.5'<8'	9½"	B
8'<18'	9½"	C
18'<30'	9½"	D
30'<37'	9½"	E
37'-40'	9½"	G
SIZE: 8'-0"		
≥0.5'<9'	11½"	C
9'<15'	11½"	D
15'<23'	11½"	E
23'<33'	11½"	E
33'-40'	11½"	G

ALTERNATE A STRUCTURE BOTTOM - TOP SLAB DETAILS

GENERAL NOTES:

1. Work this Index with Index 425-001 and Index 425-010.

2. All reinforcing is Grade 60 bars with 2" minimum cover unless otherwise noted. Cut or bend bars out of way of pipe to clear pipe by 1½". See Index 425-001 for equivalent area of welded wire fabric.

2. Chamfer all exposed edges and corners ¾" or tooled to ¼" radius.

4. All dimensions are for both precast and cast-in-place inlets unless otherwise noted.

5. Quantities are for informational and estimating purposes only.

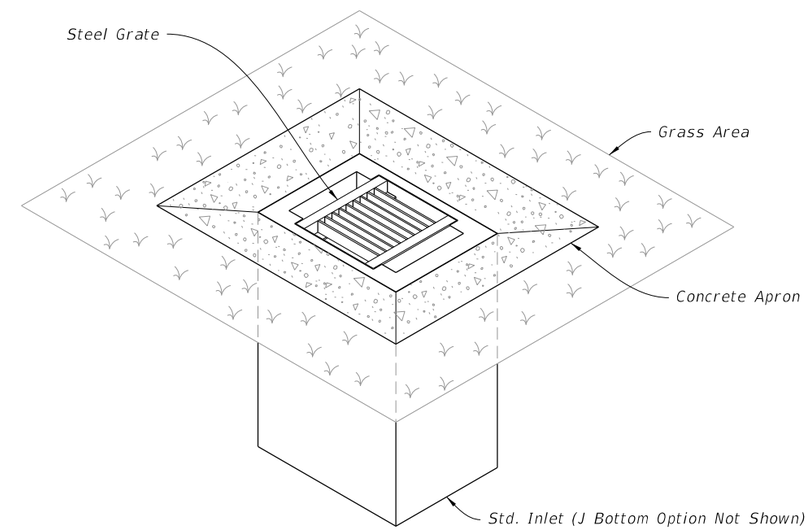

DITCH BOTTOM INLET TYPE A

(Pipe Opening Not Shown)

TABLE OF CONTENTS:

Sheet	Description
1	General Notes and Contents
2	Dimensional, Reinforcing, and Steel Grate Details
3	Concrete Apron and Sodded Area Details
4	Alternate A Structure Bottom – Top Slab Details

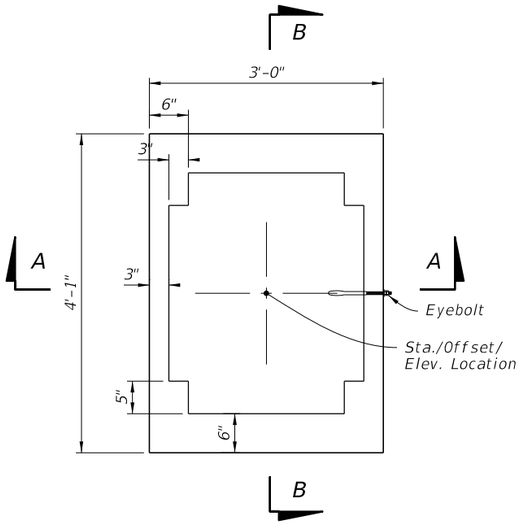

PLAN

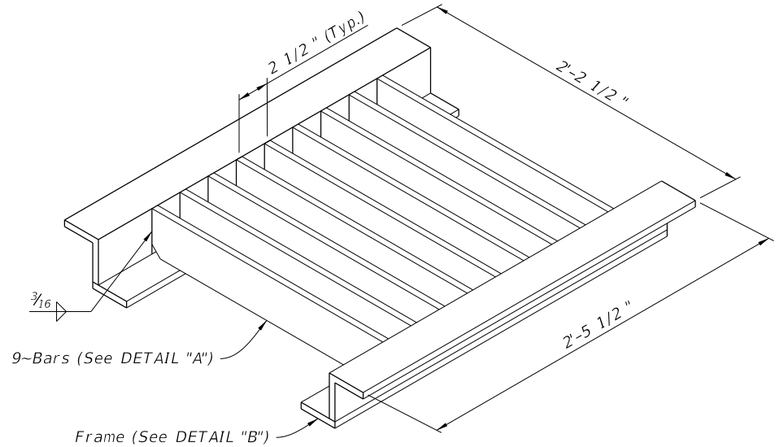

ISOMETRIC VIEW

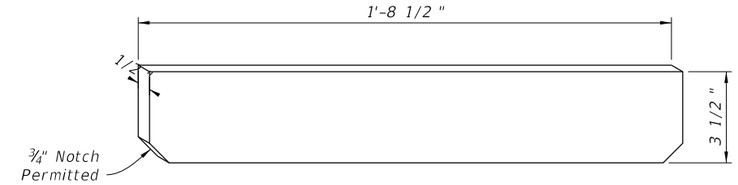

DETAIL "A"

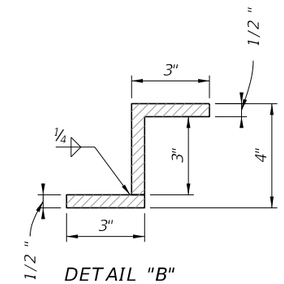

DETAIL "B"

STEEL GRATE DETAILS

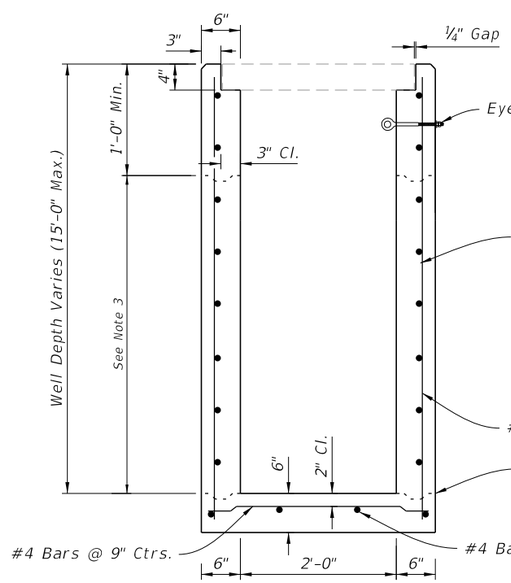

SECTION A-A
(Pipe Opening Not Shown)

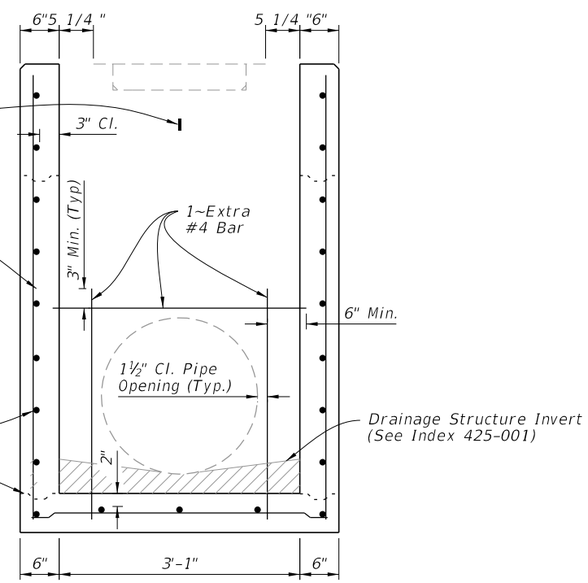

SECTION B-B
(Pipe Opening Shown)

TABLE 1 HORIZONTAL WALL REINFORCING SCHEDULE				
WALL DEPTH	SCHEDULE	AREA (in.²/ft.)	MAX. SPACING	
			BARS	WWR
0' - 10'	A12	0.20	12"	8"
10' - 15'	A6	0.20	6"	5"

NOTES:

1. Plan View: The Steel Grate, Concrete Apron, and Sod are not shown.
2. See Sheet 3 for Concrete Apron and Sodded Area details.
3. Construction joints permitted between these limits. See Index 425-001 for minimum dimensions.

DIMENSIONAL AND REINFORCING DETAILS

DIMENSIONAL, REINFORCING, AND STEEL GRATE DETAILS

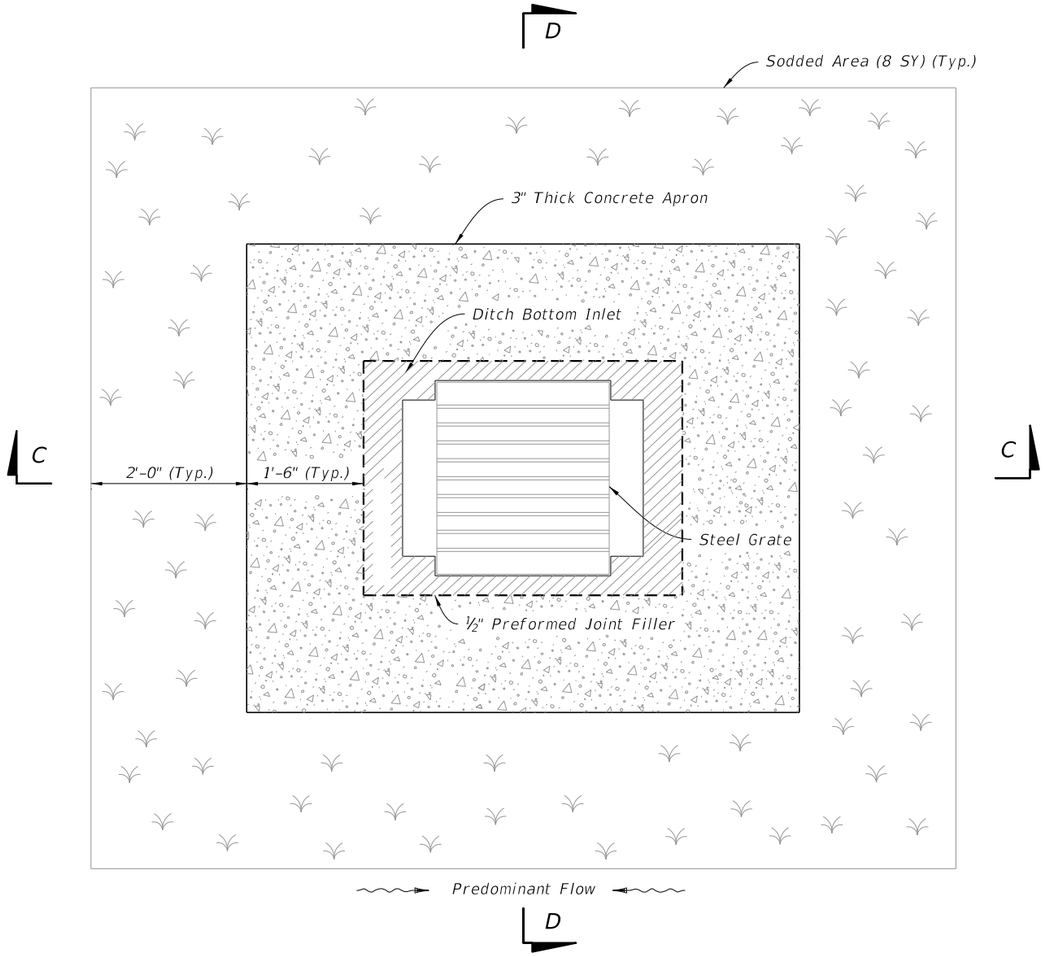

PLAN

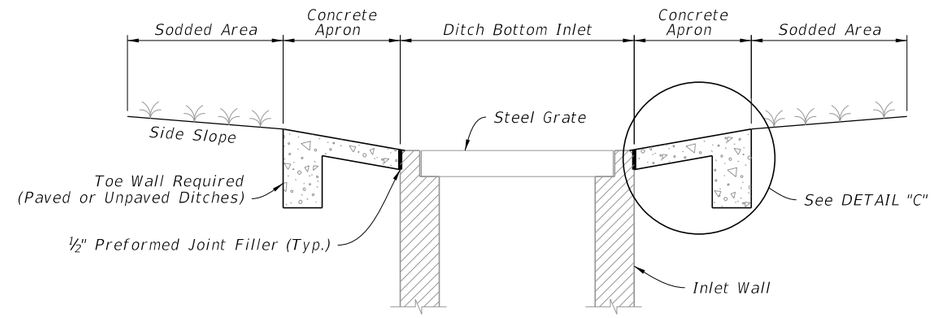

SECTION D-D

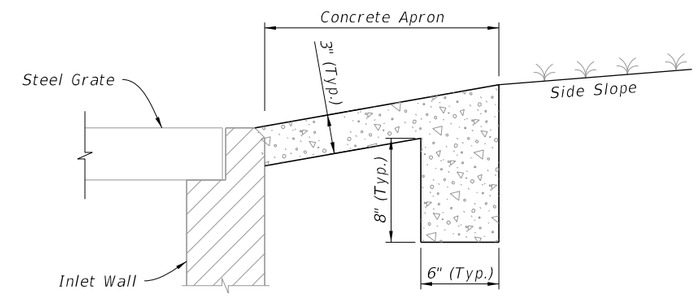

DETAIL "C"

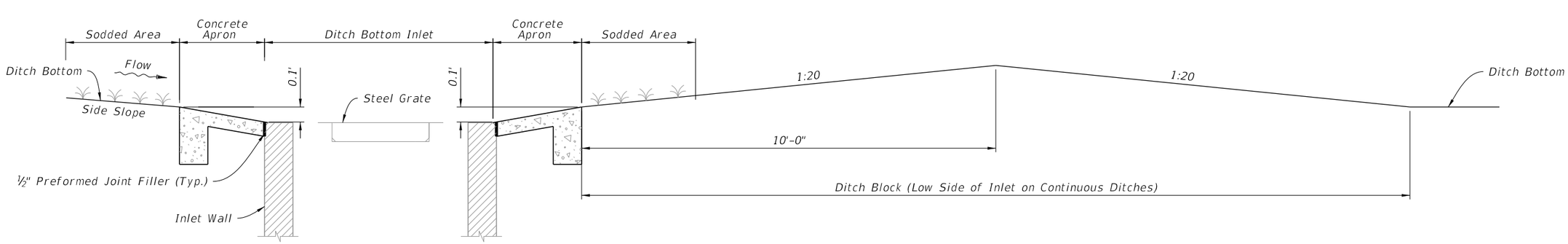

SECTION C-C AND DITCH BLOCK DETAIL

CONCRETE APRON AND SODDED AREA DETAILS

LAST REVISION	REVISION	DESCRIPTION:			INDEX	SHEET
11/01/20			FY 2022-23 STANDARD PLANS	DITCH BOTTOM INLET TYPE A	425-050	3 of 4

9/21/2021 1:46:32 PM

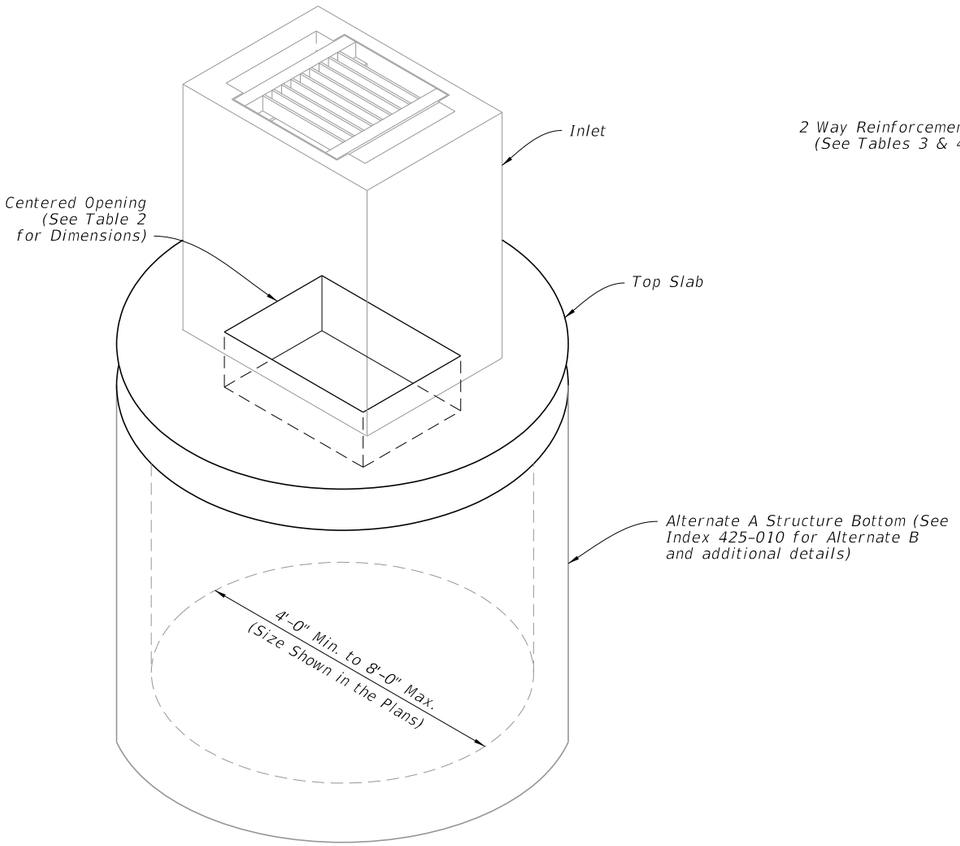

ISOMETRIC VIEW

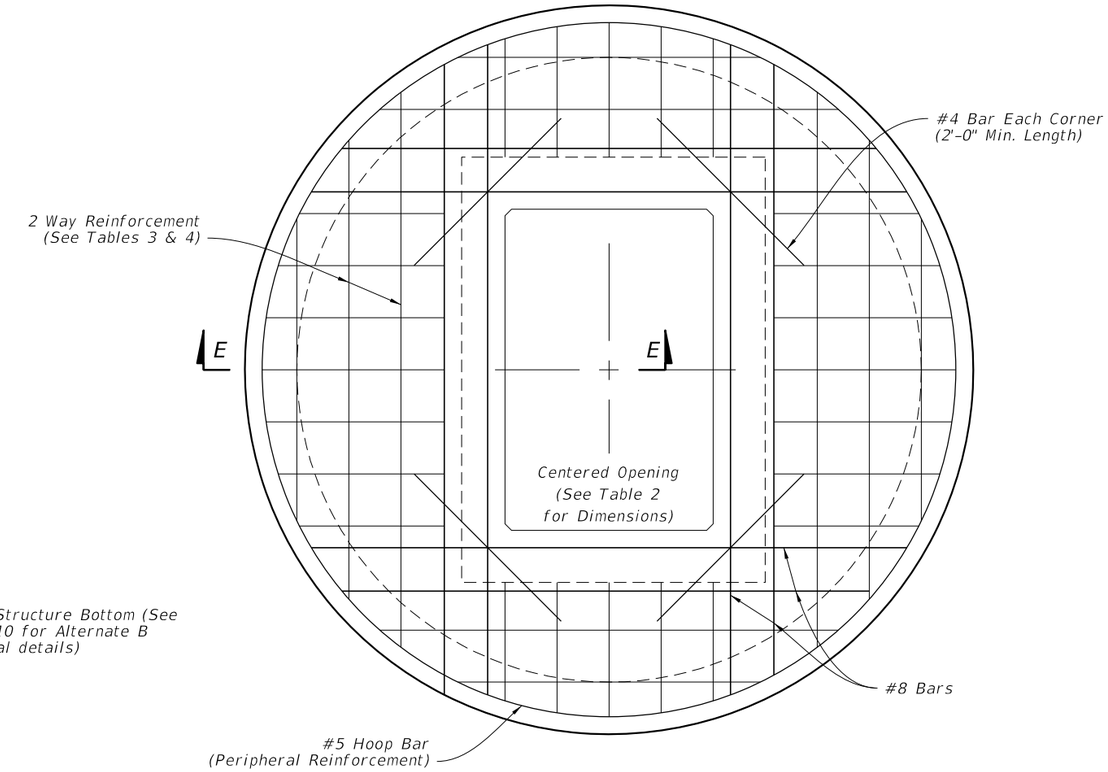

PLAN

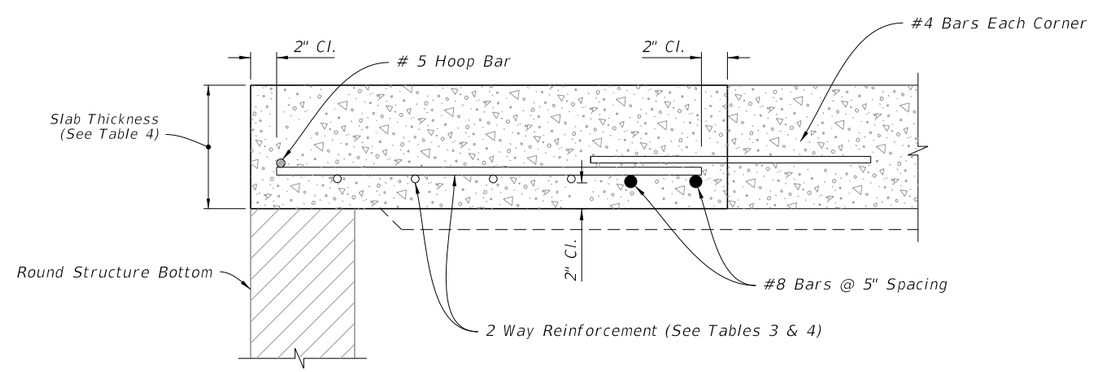

SECTION E-E

TOP SLAB REINFORCEMENT DETAILS

TABLE 2
TOP SLAB OPENING

BOTTOM STRUCTURE DIAMETER	OPENING SIZE	
	Min.	Max.
4'-0" to 8'-0"	2'-0" x 3'-1"	--

TABLE 3
TOP SLAB
REINFORCING SCHEDULE

SCHEDULE	GRADE 60 (BAR) OR 65 KSI & 70 KSI (WIRE FABRIC) In.²/ft.
A	0.20
B	0.24
C	0.37
D	0.53
E	0.73
F	1.06
G	1.45

TABLE 4
TOP SLAB WITH
CENTERED OPENING

STRUCTURE DEPTH	SLAB THICKNESS	REINFORCING (2 WAY) SCHEDULE
SIZE: 4'-0"		
≥0.5'-40'	9½"	C
SIZE: 5'-0"		
≥0.5'<30'	9½"	C
30'-40'	9½"	D
SIZE: 6'-0"		
0.5'<8'	9½"	B
8'<18'	9½"	C
18'<30'	9½"	D
30'<37'	9½"	E
37'-40'	9½"	G
SIZE: 8'-0"		
≥0.5'<9'	11½"	C
9'<15'	11½"	D
15'<23'	11½"	E
23'<33'	11½"	E
33'-40'	11½"	G

ALTERNATE A STRUCTURE BOTTOM - TOP SLAB DETAILS

GENERAL NOTES:

1. Work this Index with Index 425-001 and Index 425-010.

2. All reinforcing is Grade 60 bars with 2" minimum cover unless otherwise noted. See Index 425-001 for equivalent area of welded wire fabric. Bars to be cut or bent for min. 1½" clearance around pipe.

3. Chamfer all exposed edges and corners ¾" or tooled to ¼" radius.

4. Dimensions are for both precast and cast-in-place inlets unless otherwise noted.

5. Quantities are for informational and estimating purposes only.

TABLE OF CONTENTS:

Sheet	Description
1	General Notes and Contents
2	Dimensional, Reinforcing, and Grate Details
3	Traversable Top Details
4	Concrete Apron and Sodded Area Details
5	Alternate A Structure Bottom - Top Slab Details

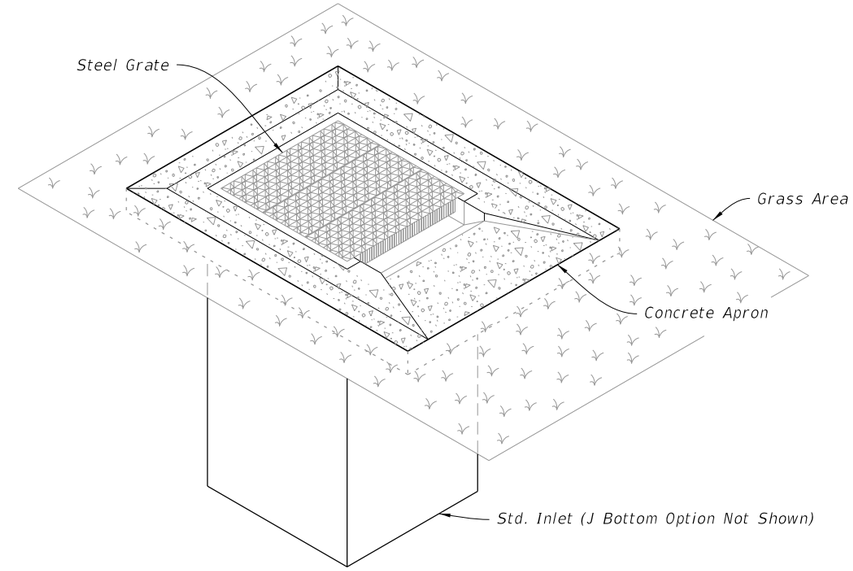

SINGLE SLOT INLET
(Pipe Connection Not Shown)

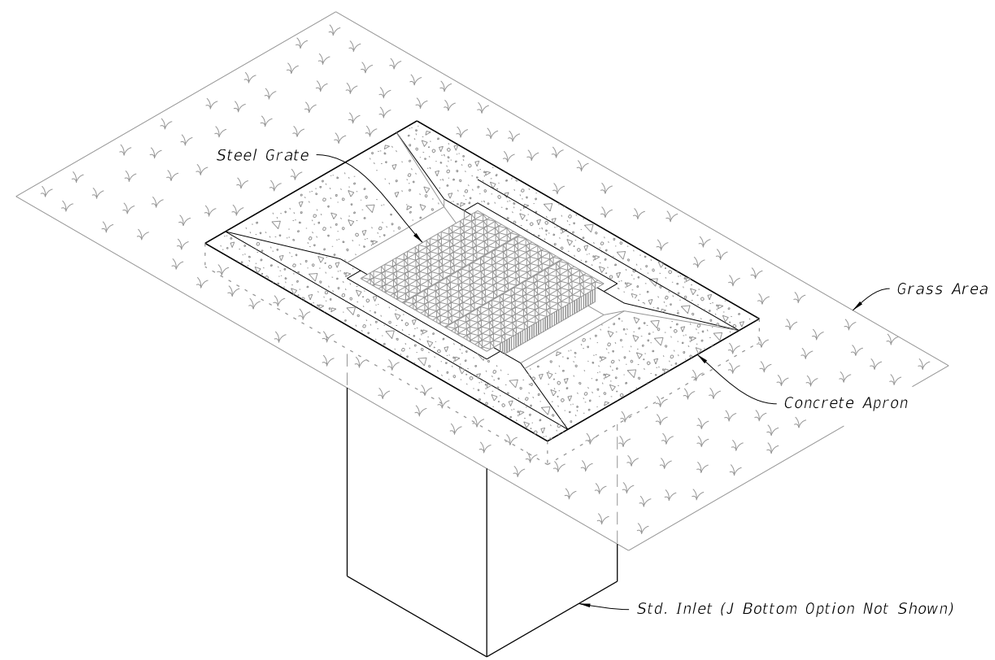

DOUBLE SLOT INLET
(Pipe Connection Not Shown)

9/21/2021 1:46:34 PM

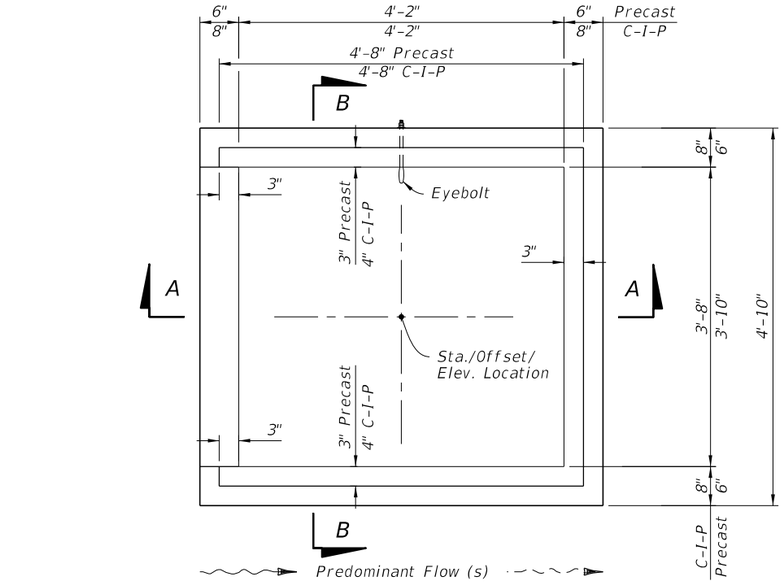

PLAN

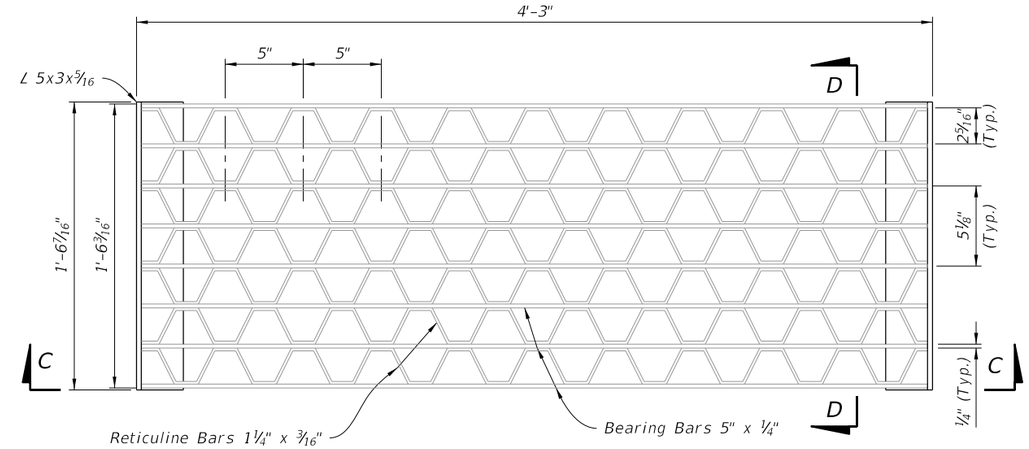

PLAN

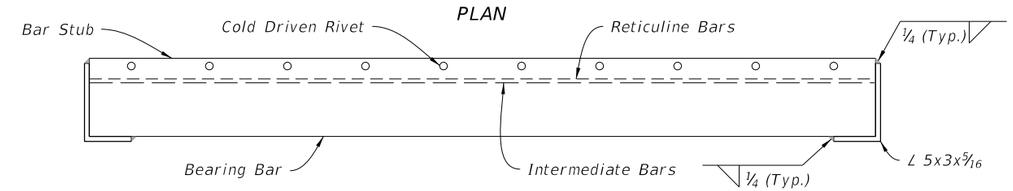

SECTION C-C

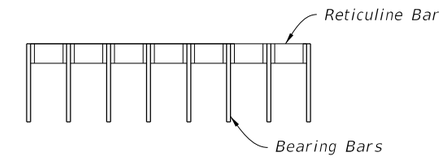

SECTION D-D

STEEL GRATE DETAILS

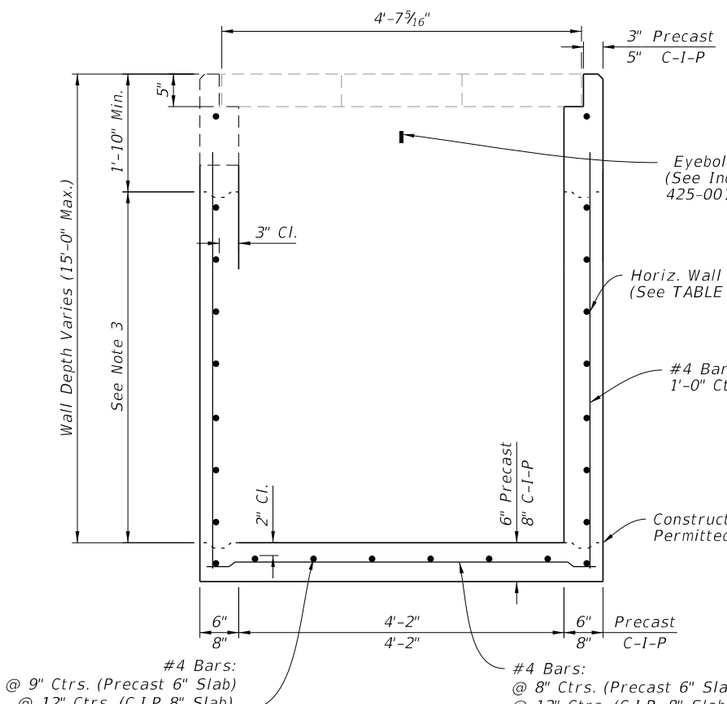

SECTION A-A
(Pipe Opening Not Shown)

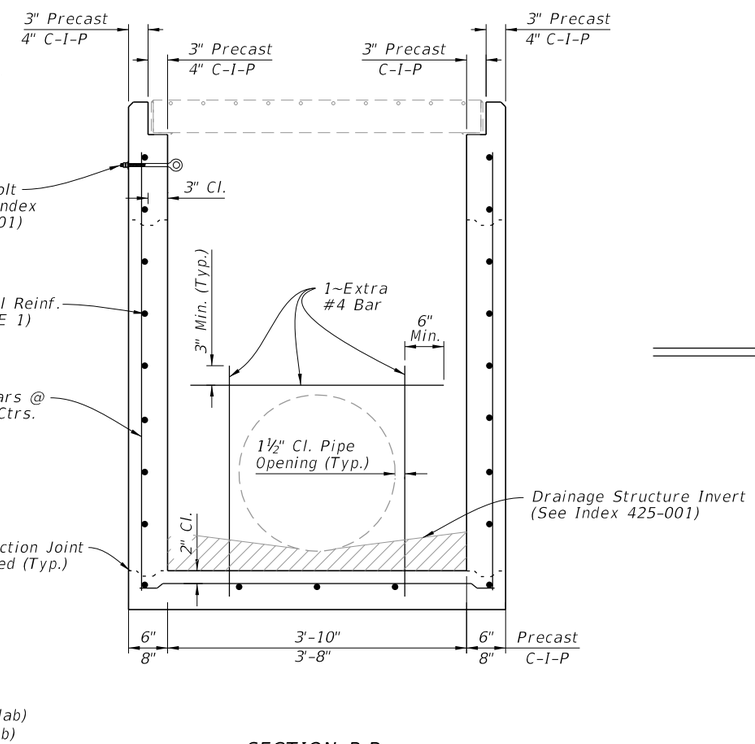

SECTION B-B
(Pipe Opening Shown)

DIMENSIONAL AND REINFORCING DETAILS

TABLE 1
HORIZONTAL WALL REINFORCING SCHEDULE

WALL DEPTH	SCHEDULE	AREA (in.²/ft.)	MAX. SPACING	
			BARS	WWR
0' - 5'	A12	0.200	12"	8"
5' - 9'	A6	0.200	6"	5"
9' - 13'	B5.5	0.240	5 1/2"	5"
13'-15'	Special	0.267	5"	4"

NOTES:

1. Plan View; grate, apron, slots and sod not shown.
2. See Sheet 3 for apron and traversable slot details.
3. Construction joints permitted between these limits. See Index 425-001 for minimum dimensions.

DIMENSIONAL, REINFORCING, AND GRATE DETAILS

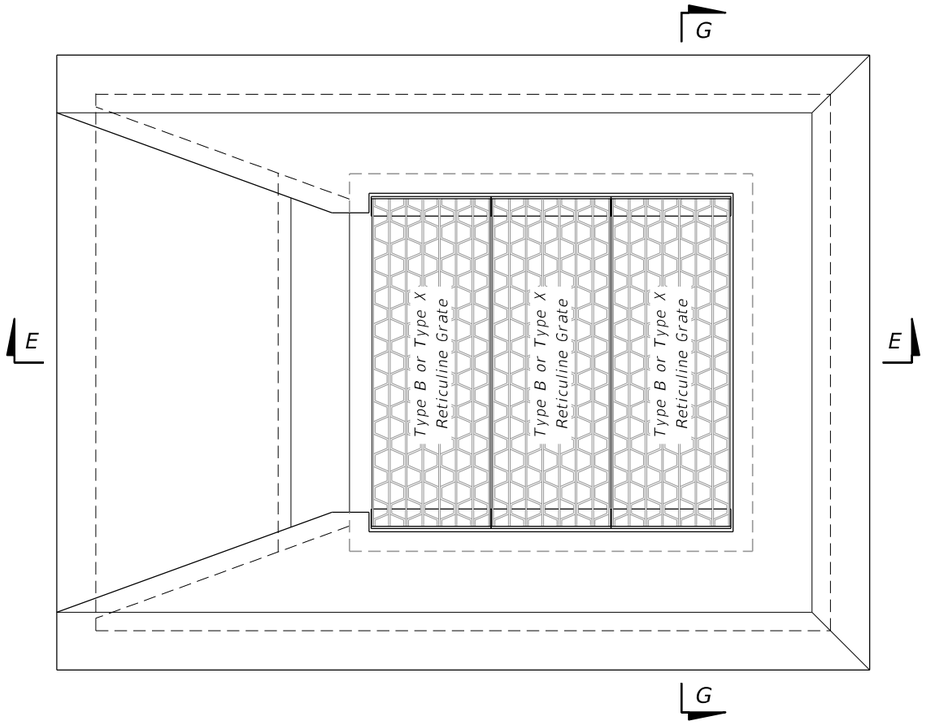

PLAN

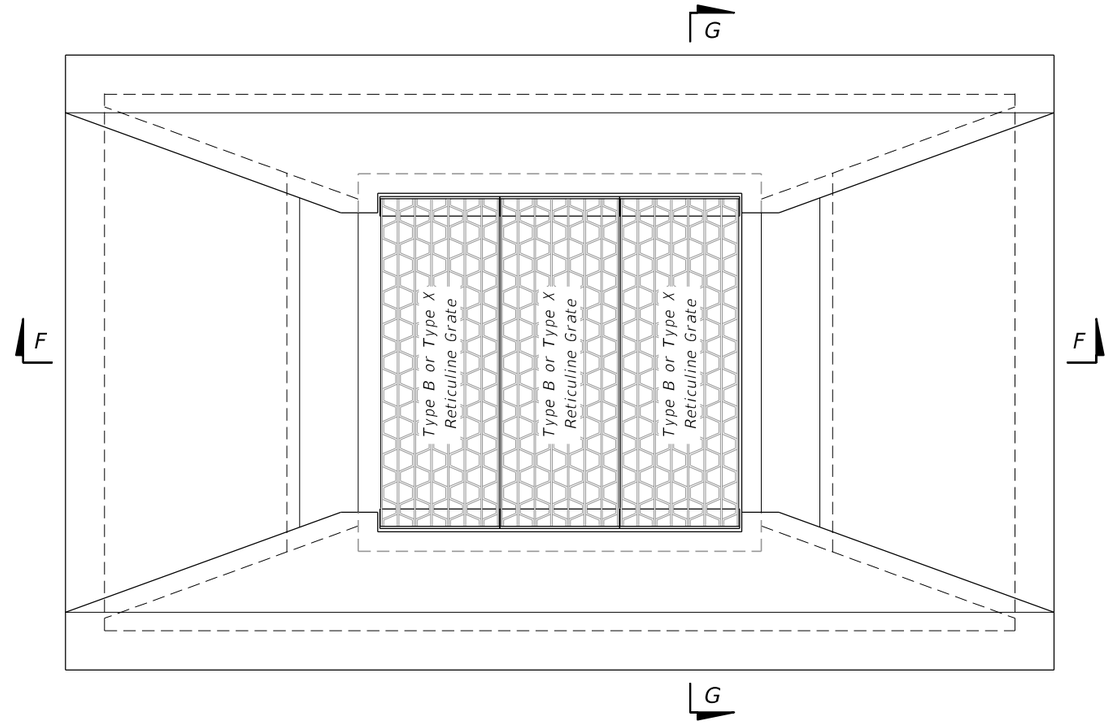

PLAN

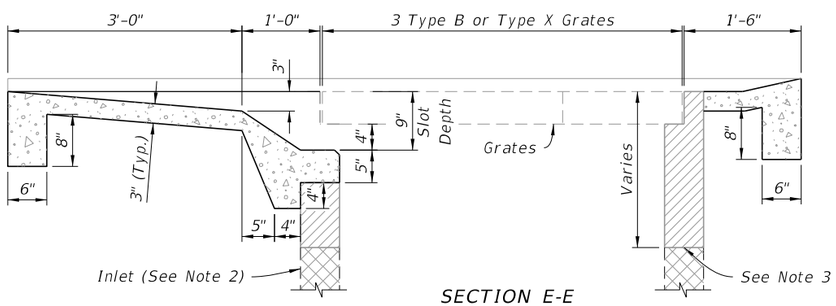

SECTION E-E

SINGLE SLOT

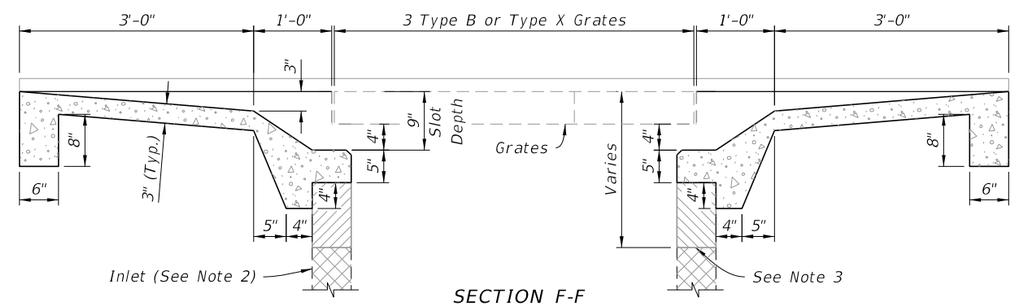

SECTION F-F

DOUBLE SLOT

NOTES:

1. These traversable tops are for new or existing Type B Inlets and for conversion of existing Type X Inlets.

2. Inlet box (line type indicates existing box to facilitate depiction of partial construction on existing inlets)

3. On new boxes the traversable top may be cast as a monolithic unit or cast in segments, and the location of this line may be lower to facilitate handling and placement; however, the slot depth is to remain at 9 inches. See Index 425-001 for top to wall connection. For converting to traversable tops on existing inlets remove concrete to this line and expose the existing reinforcement. Reshape or splice in reinforcement to penetrate the rim and returns of the grate seat, and bend the reinforcement into the slot shelf to extend into the abutting throat pavement.

4. See Sheet 2 for Precast and C-I-P dimensions.

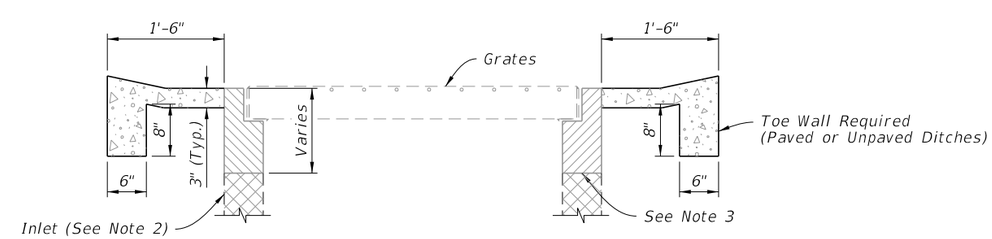

SECTION G-G

TRAVERSABLE TOP DETAILS

LAST REVISION	REVISION	DESCRIPTION:			INDEX	SHEET
11/01/20			FDOT FY 2022-23 STANDARD PLANS	DITCH BOTTOM INLET TYPE B	425-051	3 of 5

9/21/2021 1:46:35 PM

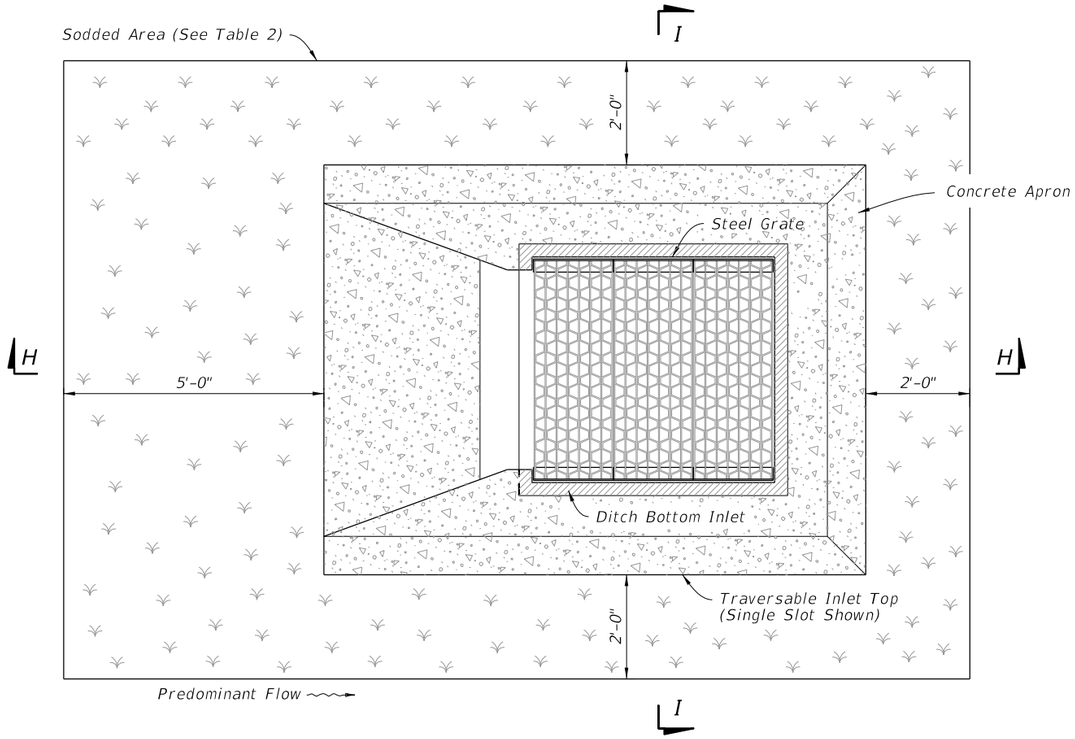

PLAN

TABLE 2 ESTIMATED QUANTITIES			
SLOT TYPE	Concrete Apron		SOD
	SY	CY	SY
Single	6.2	0.9	14
Double	8.1	1.1	19

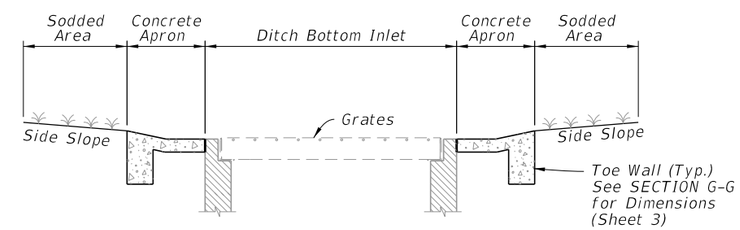

SECTION I-I

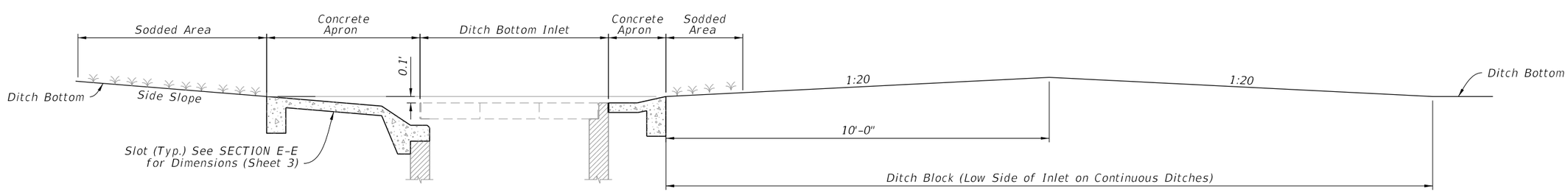

SECTION H-H AND DITCH BLOCK

CONCRETE APRON AND SODDED AREA DETAILS

LAST REVISION	REVISION	DESCRIPTION:	FY 2022-23 STANDARD PLANS	DITCH BOTTOM INLET TYPE B	INDEX	SHEET
11/01/20					425-051	4 of 5

9/21/2021 1:46:36 PM

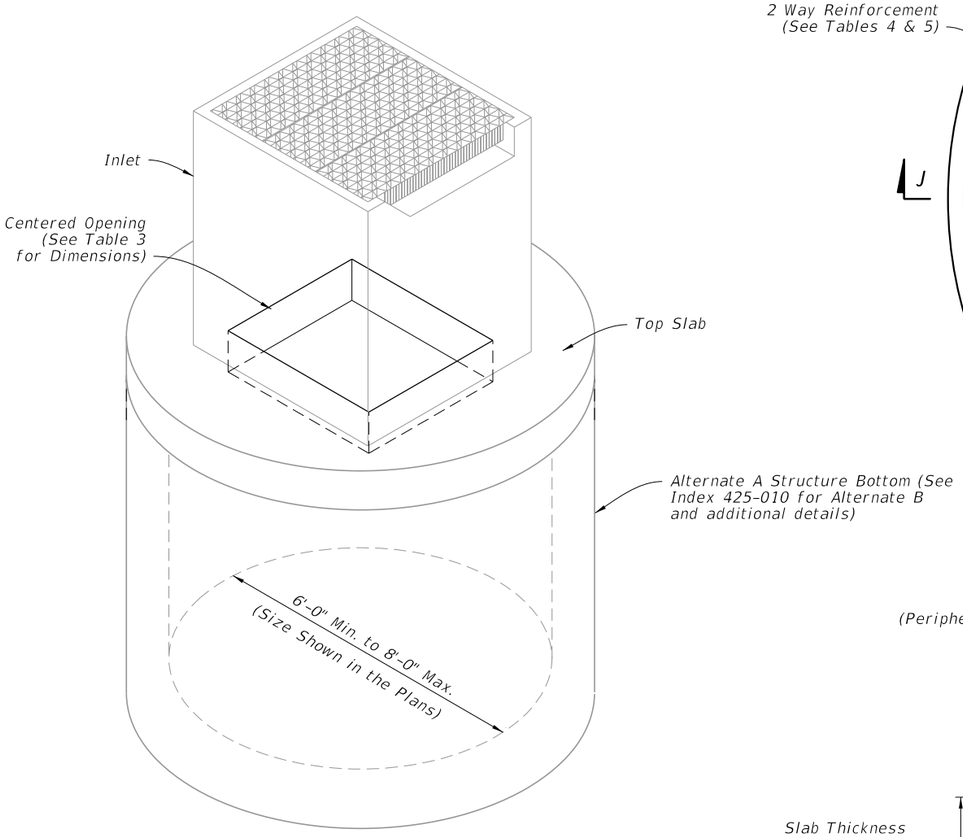

ISOMETRIC VIEW

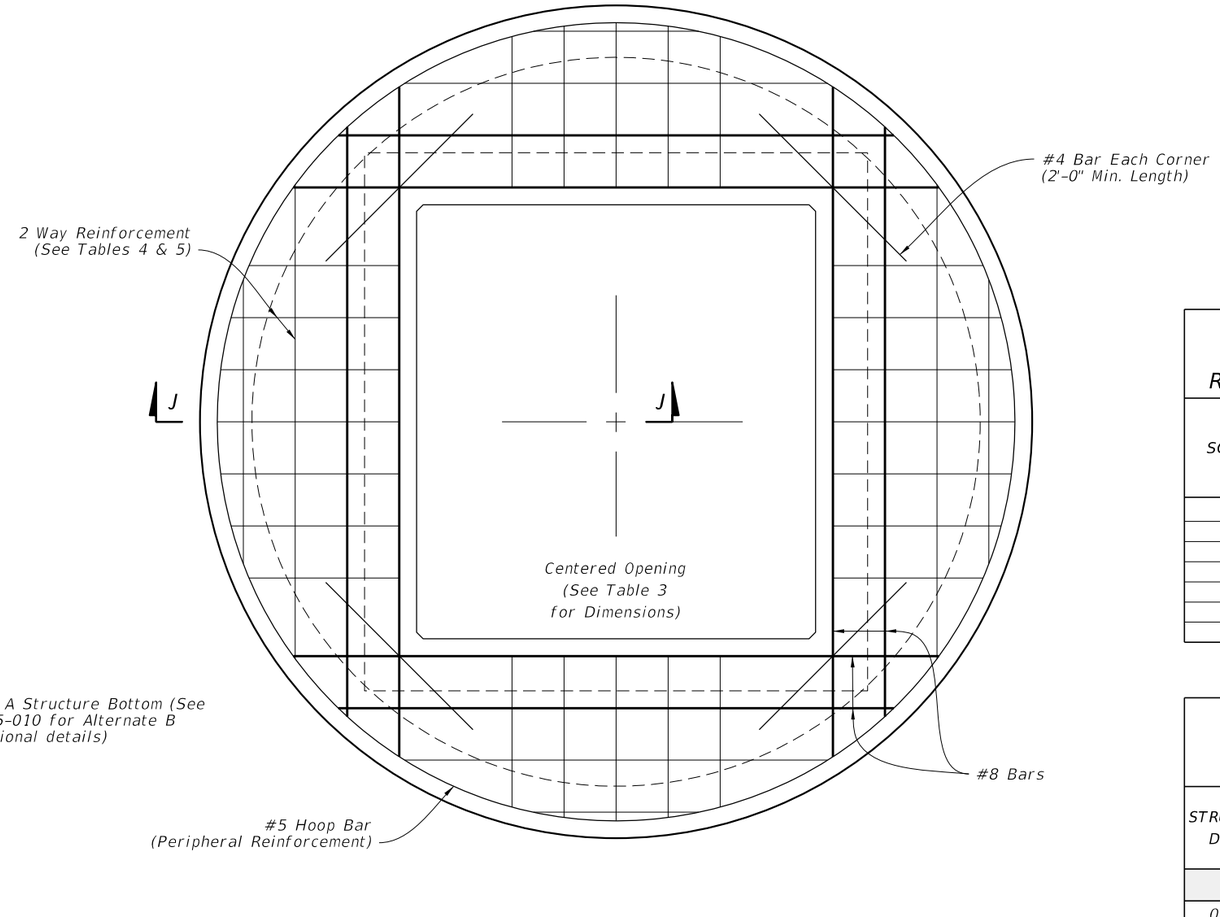

PLAN

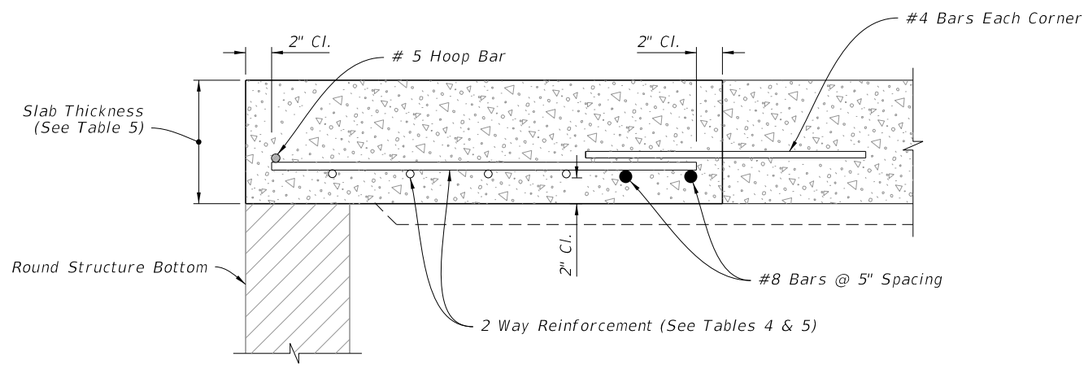

SECTION J-J

TOP SLAB REINFORCMENT DETAILS

TABLE 3 TOP SLAB OPENING		
DIAMETER	OPENING SIZE	
	Min.	Max.
6'-0" to 8'-0"	3'-8" x 4'-2"	3'-10" x 4'-2"

TABLE 4 TOP SLAB REINFORCING SCHEDULE	
SCHEDULE	GRADE 60 (BAR) OR 65 KSI & 70 KSI (WIRE FABRIC) In.²/ft.
A	0.20
B	0.24
C	0.37
D	0.53
E	0.73
F	1.06
G	1.45

TABLE 5 TOP SLAB WITH CENTERED OPENING		
STRUCTURE DEPTH	SLAB THICKNESS	REINFORCING (2 WAY) SCHEDULE
SIZE: 6'-0"		
0.5'<8'	9½"	B
8'<18'	9½"	C
18'<30'	9½"	D
30'<37'	9½"	E
37'-40'	9½"	G
SIZE: 8'-0"		
≥0.5'<9'	11½"	C
9'<15'	11½"	D
15'<23'	11½"	E
23'<33'	11½"	E
33'-40'	11½"	G

ALTERNATE A STRUCTURE BOTTOM - TOP SLAB DETAILS

GENERAL NOTES:

1. Work this Index with Index 425-001 and Index 425-010.
2. Chamfer all exposed edges and corners ¾" chamfer or tooled to ¼" radius.
3. All reinforcing is Grade 60 bars with 2" minimum. cover unless otherwise noted. Cut or bend bars for 1½" clearance around pipe opening. Provide one additional #4 bar above and at each side of pipe opening.
4. Use Concrete Apron on inlets without slots and inlets with non-traversable slots only when called for in the Plans.
5. Quantities are for informational and estimating purposes only.

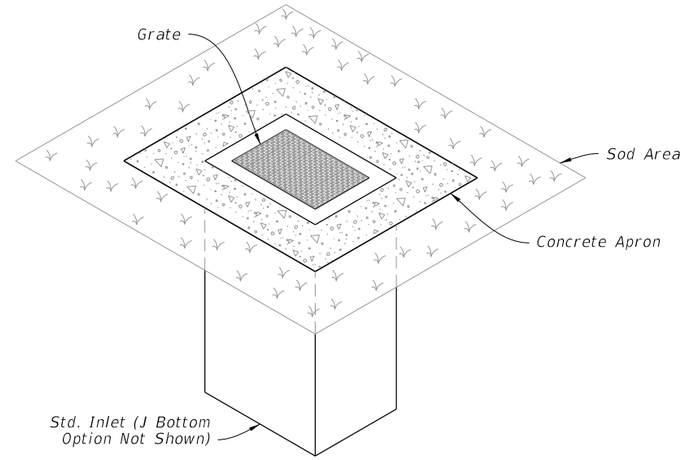

DITCH BOTTOM INLET TYPE C
TRAVERSABLE
(Without Slot - Type D, E, and H Similar, Pipe Connection Not Shown)

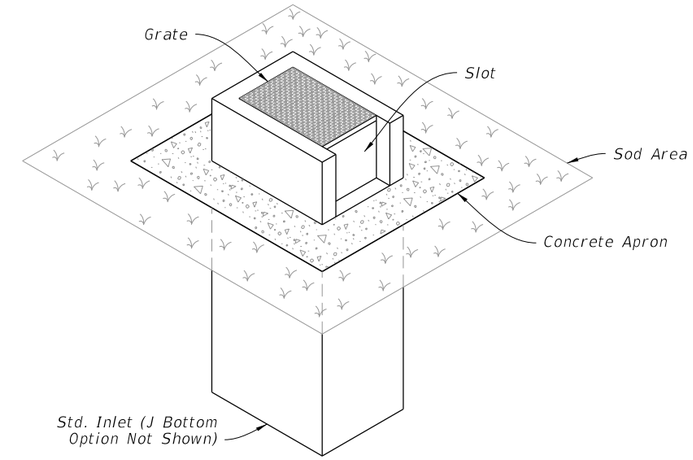

DITCH BOTTOM INLET TYPE C
NON-TRAVERSABLE
(Slot > 7" Shown - Type D, E, and H Similar, Pipe Connection Not Shown)

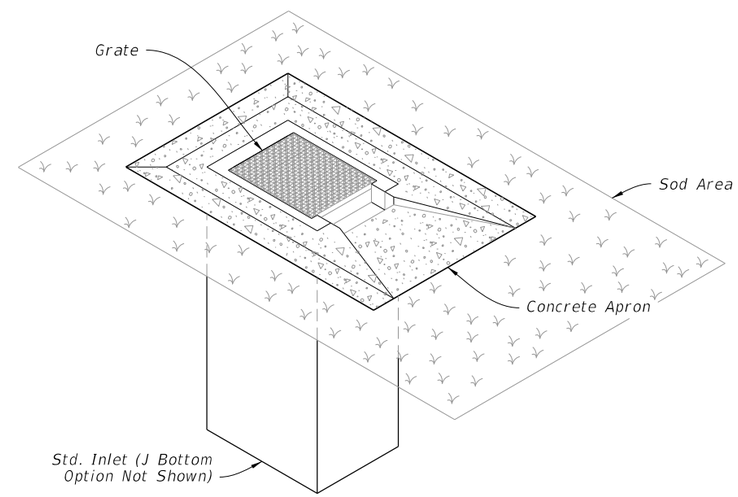

DITCH BOTTOM INLET TYPE C
TRAVERSABLE
(Single Slot < 7" Shown, Double Slot, Type D, and E Similar, Pipe Connection Not Shown)

TABLE OF CONTENTS:

Sheet	Description
1	General Notes and Contents
2	Type C - Dimensional, Reinforcing, and Grate Details
3	Type D - Dimensional, Reinforcing, and Grate Details
4	Type E - Dimensional, Reinforcing, and Grate Details
5	Type H (2 & 3 Grate) - Dimensional, Reinforcing, and Steel Grate Details
6	Type H (4 Grate) - Dimensional, Reinforcing, and Steel Grate Details
7	Cast Iron Grate Details
8	Non-Traversable Inlet Details
9	Traversable Inlet Without Slot Details
10	Traversable Inlet With Slot Details
11	Case 1 - Add Traversable Slots to Existing Inlets
12	Case 2 - Add Traversable Slots (Partial) to Existing Inlets
13	Case 3 - Add Traversable Slots (Partial) to Existing Inlets and Ditch Block
14	Alternate A Structure Bottom - Top Slab Details

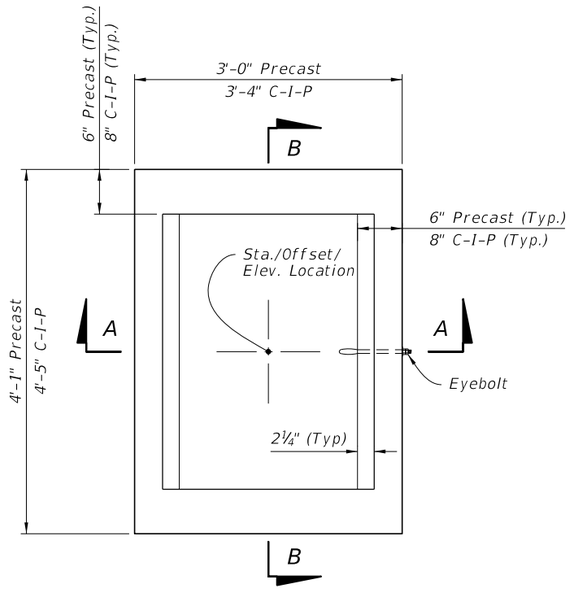

PLAN

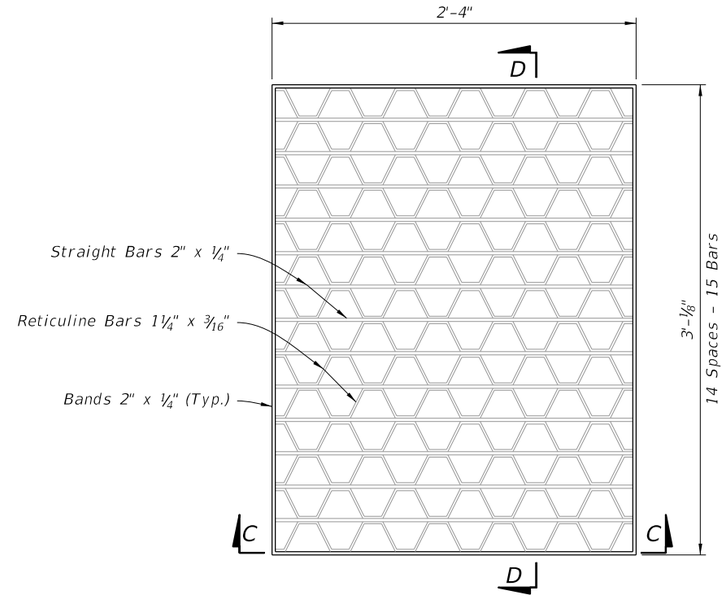

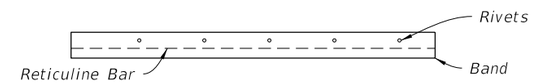

SECTION C-C

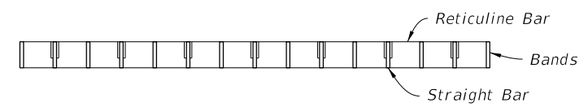

SECTION D-D

STEEL GRATE DETAIL

(Approx. 104 Lbs. - See Sheet 7 For Cast Iron Grates)

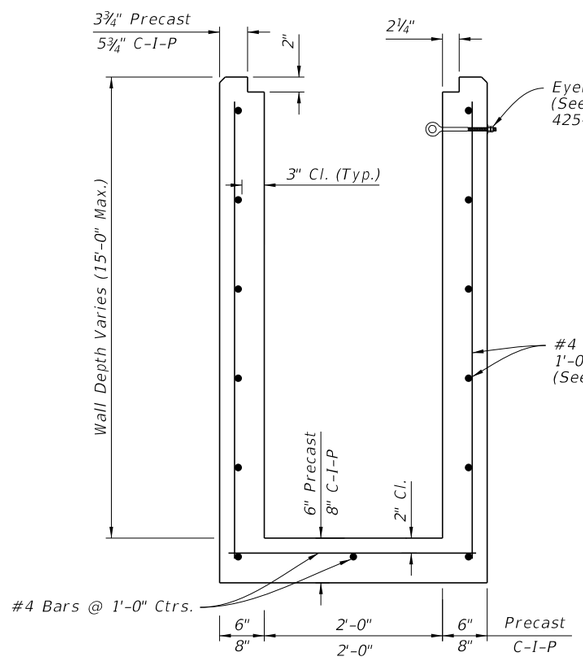

SECTION A-A
(Pipe Opening Not Shown)

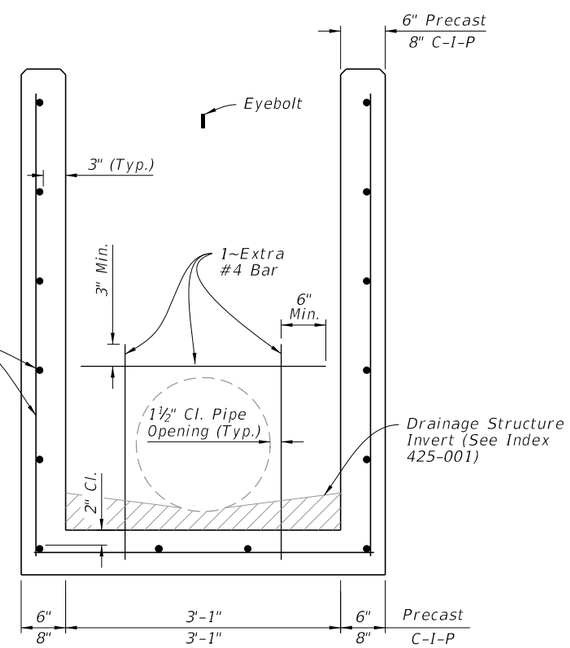

SECTION B-B
(Pipe Opening Shown)

TABLE 1 HORIZONTAL WALL REINFORCING SCHEDULE				
WALL DEPTH	SCHEDULE	AREA (in.²/ft.)	MAX. SPACING	
			BARS	WWF
0' - 15'	A12	0.20	12"	8"

NOTES:

1. Grate, Concrete Apron, and Sod not shown on structure detail.
2. See Sheet 8, 9, and 10 for Concrete Apron and Sodded Area details.

DIMENSIONAL AND REINFORCING DETAILS

TYPE C - DIMENSIONAL, REINFORCING, AND STEEL GRATE DETAILS

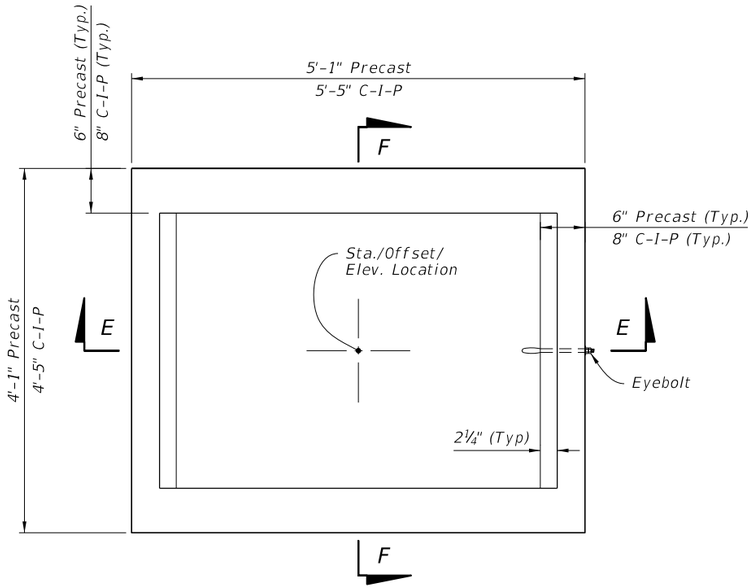

PLAN

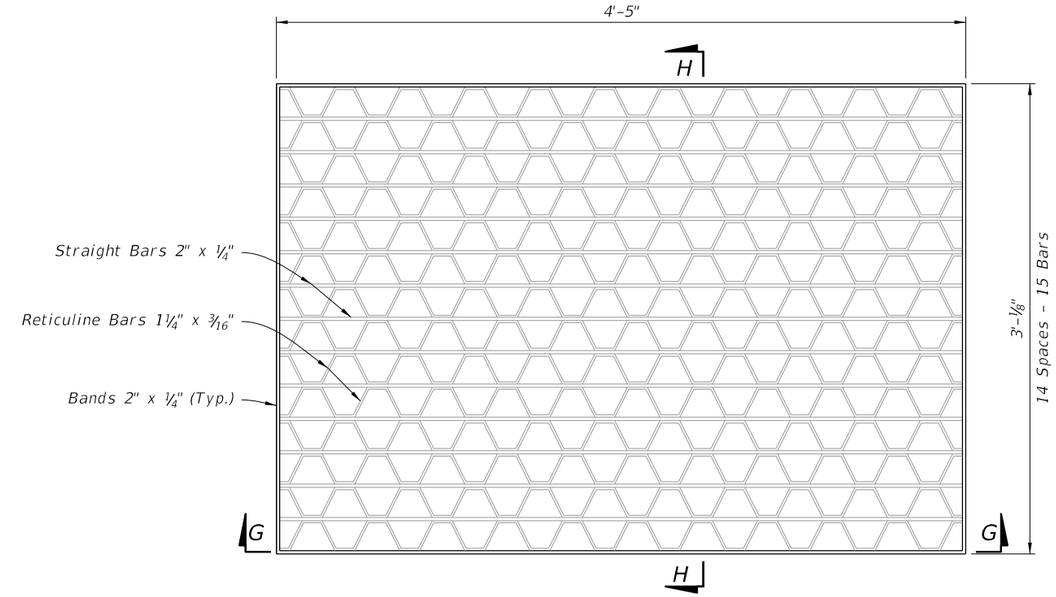

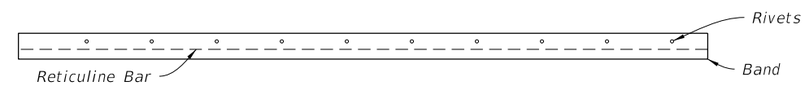

SECTION G-G

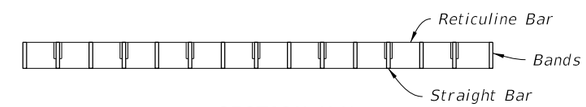

SECTION H-H

STEEL GRATE DETAIL

(Approx. 190 lbs. - See Sheet 7 For Cast Iron Grates)

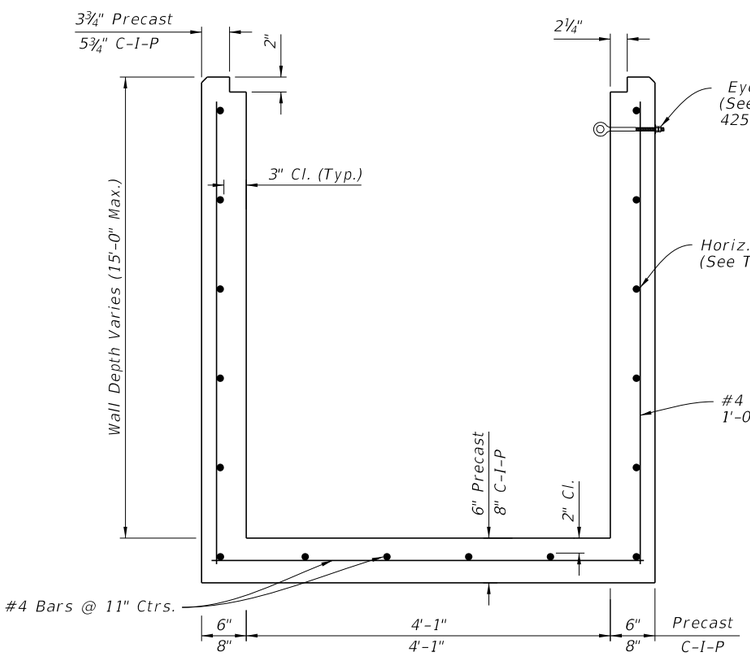

SECTION E-E

(Pipe Opening Not Shown)

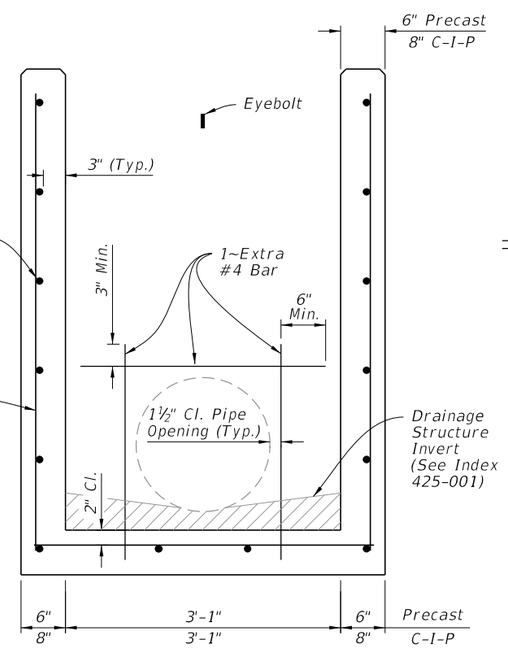

SECTION F-F

(Pipe Opening Shown)

DIMENSIONAL AND REINFORCING DETAILS

TABLE 2
HORIZONTAL WALL REINFORCING SCHEDULE

WALL DEPTH	SCHEDULE	AREA (in.²/ft.)	MAX. SPACING	
			BARS	WWR
0' - 6'	A12	0.20	12"	8"
6' - 10'	A6	0.20	6"	5"
10' - 13'	A4	0.20	4"	3"
10' - 15'	B5.5	0.24	5½"	5"

NOTES:

1. Grate, Concrete Apron, and Sod not shown on structure details.
2. See Sheet 8, 9, and 10 for Concrete Apron and Sodded Area details.
3. Cast Iron Grate is not permitted on inlet Type D.

TYPE D - DIMENSIONAL, REINFORCING, AND STEEL GRATE DETAILS

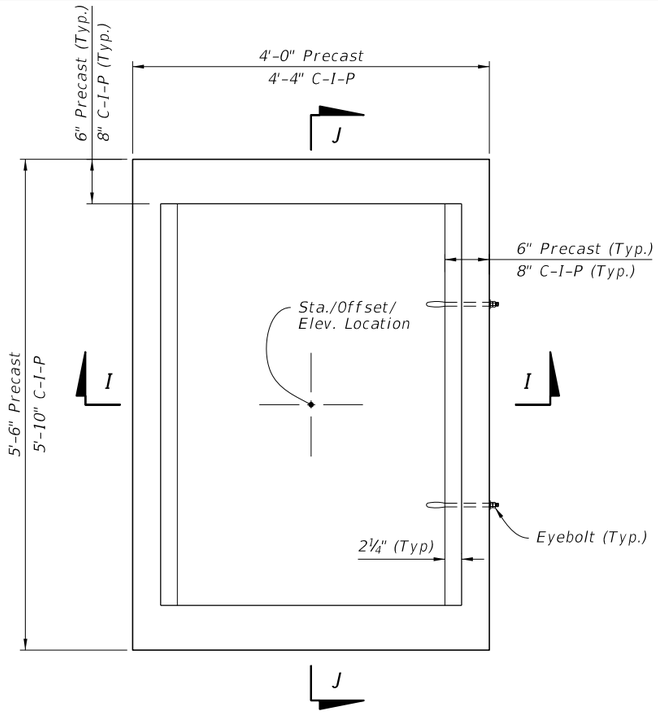

PLAN

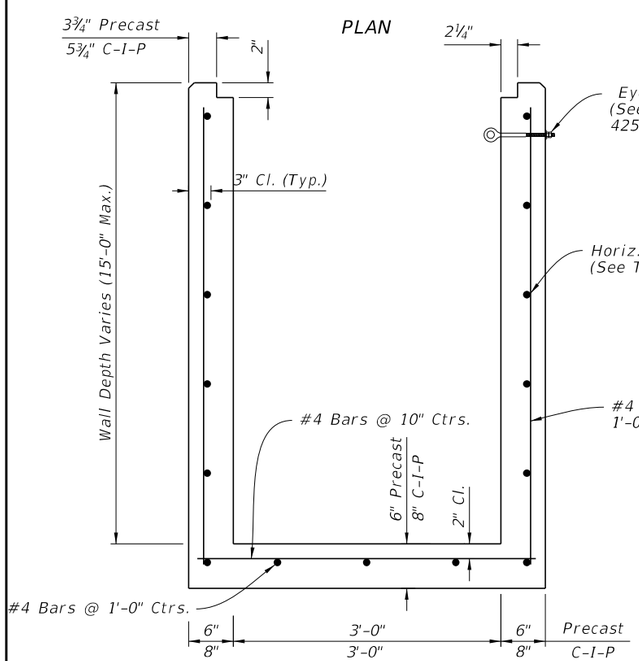

SECTION I-I

(Pipe Opening Not Shown)

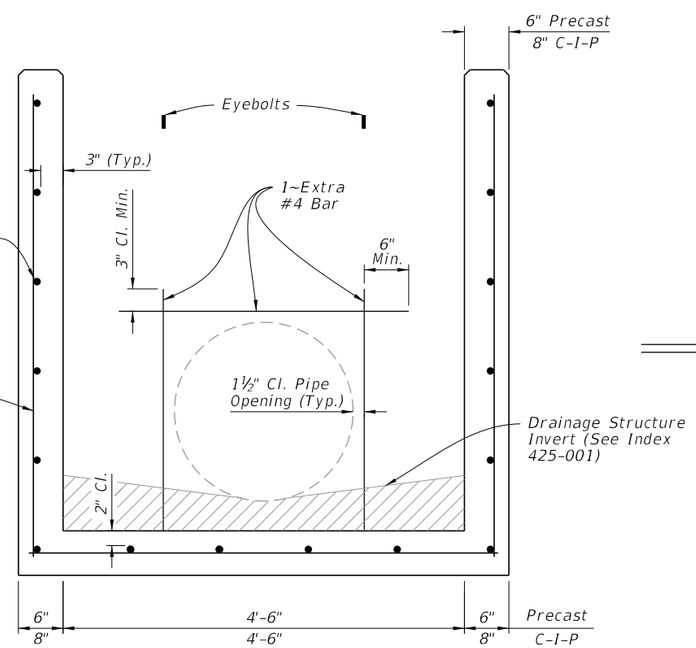

SECTION J-J

(Pipe Opening Shown)

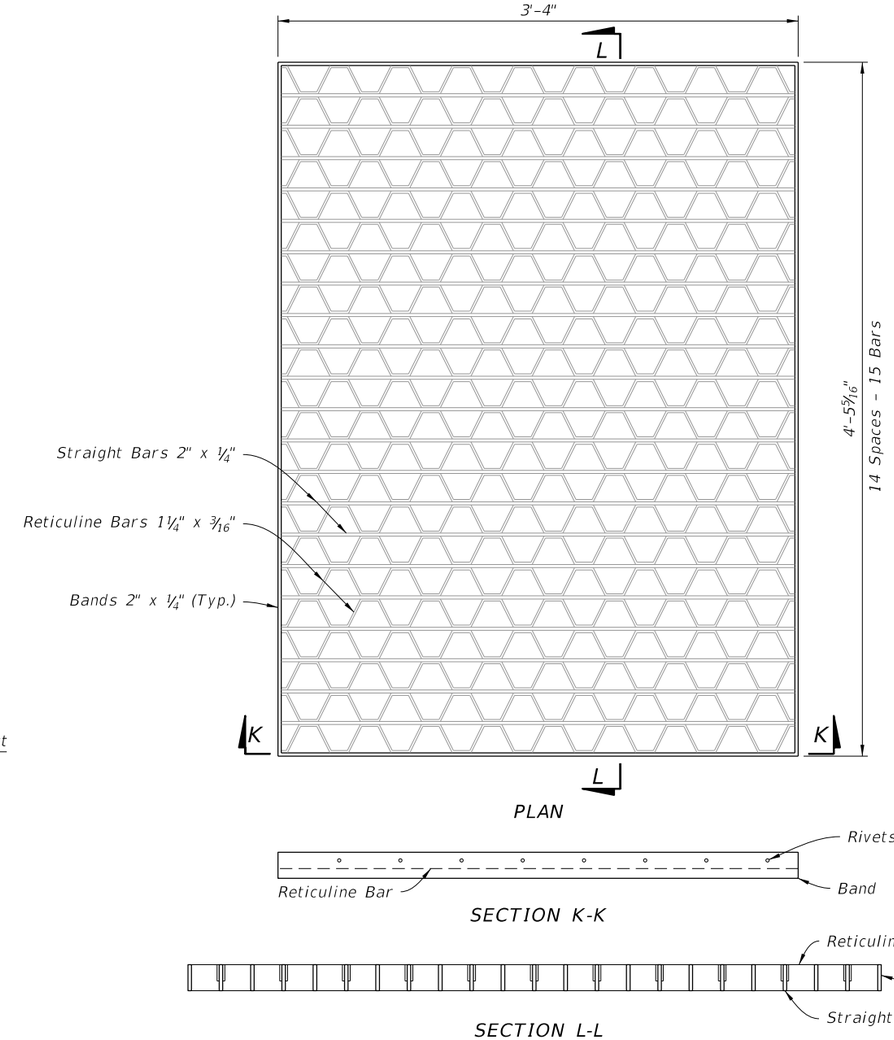

PLAN

SECTION K-K

SECTION L-L

STEEL GRATE DETAIL

(Approx. 215 lbs. - See Sheet 7 For Cast Iron Grates)

TABLE 3
HORIZONTAL WALL REINFORCING SCHEDULE

WALL DEPTH	SCHEDULE	AREA (in.²/ft.)	MAX. SPACING	
			BARS	WWR
0' - 5'	A12	0.20	12"	8"
0' - 7.5'	A6	0.20	6"	5"
7.5' - 10'	B5.5	0.24	5½"	5"
10' - 15'	C6.5	0.37	6½"	6"

NOTES:

1. Grate, Concrete Apron, and Sod not shown on structure detail.
2. See Sheet 8, 9, and 10 for Concrete Apron and Sodded Area details.

DIMENSIONAL AND REINFORCING DETAILS

TYPE E - DIMENSIONAL, REINFORCING, AND STEEL GRATE DETAILS

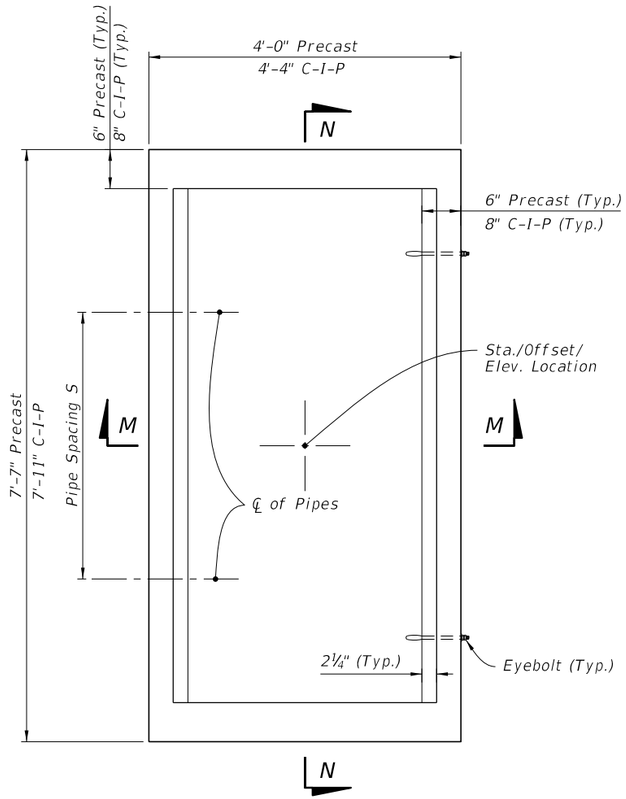

PLAN

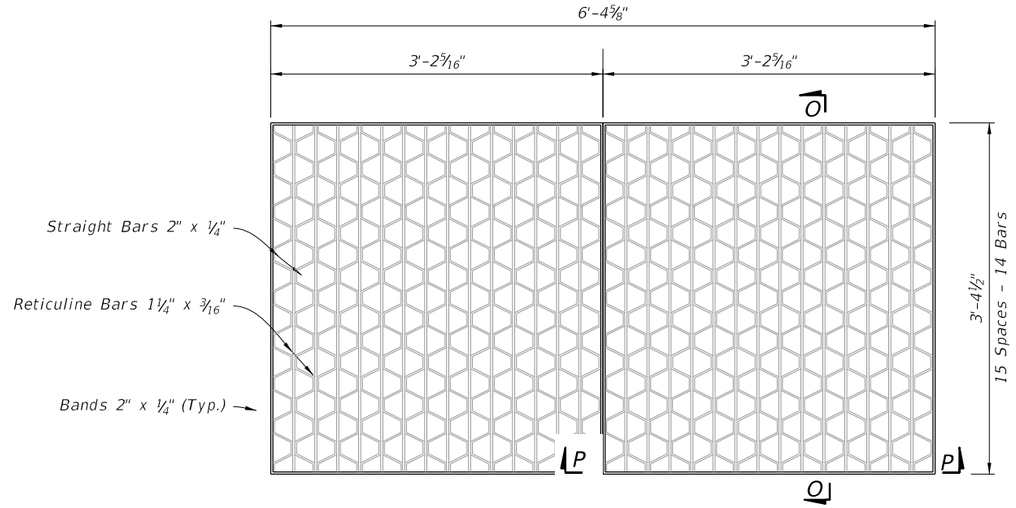

PLAN

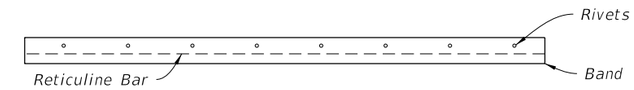

SECTION O-O

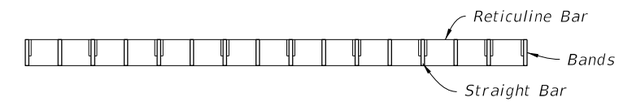

SECTION P-P

STEEL GRATE DETAIL

(2-Grates Shown, Approx. 310 lbs. - See Sheet 7 For Cast Iron, 3-Grates)

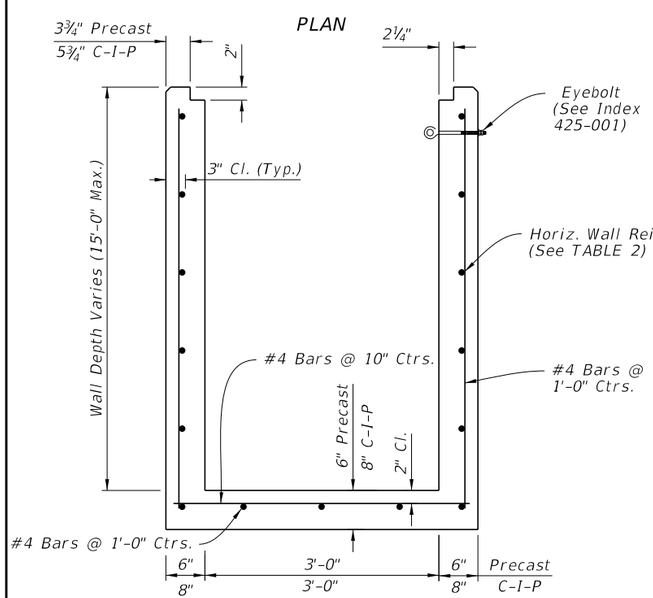

SECTION M-M

(Pipe Opening Not Shown)

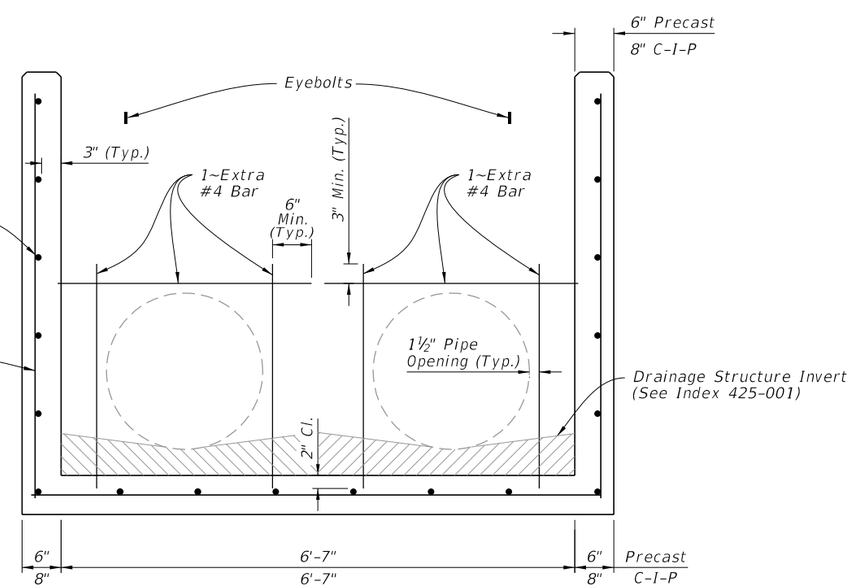

SECTION N-N

(Pipe Opening Shown)

TABLE 4 HORIZONTAL WALL REINFORCING SCHEDULE				
WALL DEPTH	SCHEDULE	AREA (in.²/ft.)	MAX. SPACING	
			BARS	WWR
0' - 5'	B5.5	0.24	5½"	5"
5'-7'	C6.5	0.37	6½"	6"
7' - 15'	D4.5	0.53	4½"	4"

NOTES:

1. Grate, Concrete Apron, and Sod not shown on structure details.
2. See Sheet 8, 9, and 10 for Concrete Apron and Sodded Area details.
3. Pipe Spacing S = 3'-5"

DIMENSIONAL AND REINFORCING DETAILS

TYPE H (2 & 3 GRATE) - DIMENSIONAL, REINFORCING, AND STEEL GRATE DETAILS

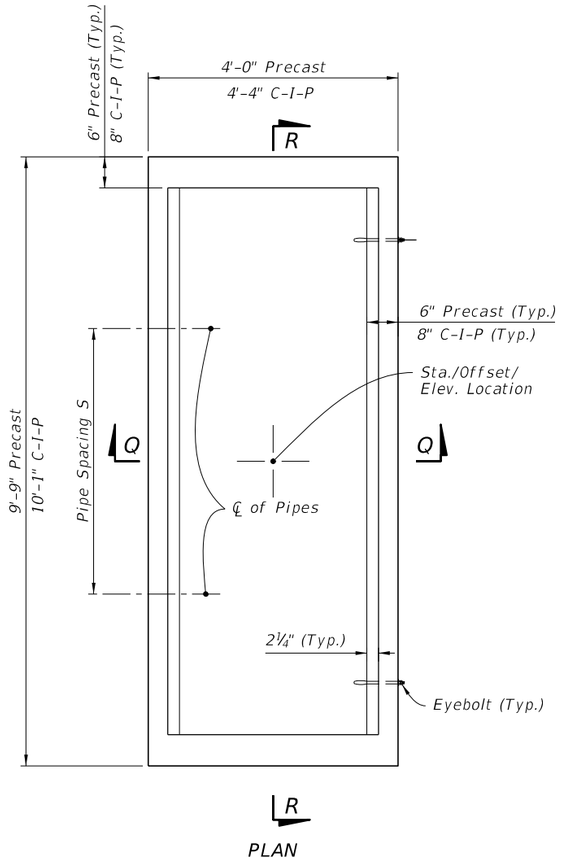

PLAN

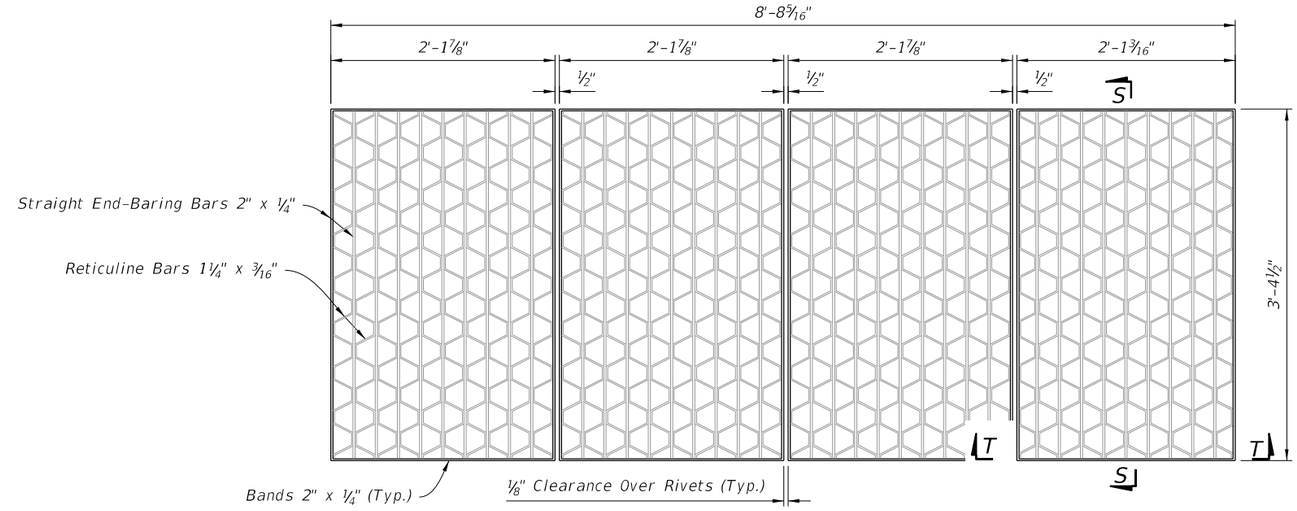

PLAN

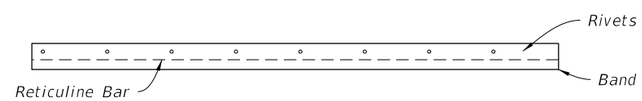

SECTION S-S

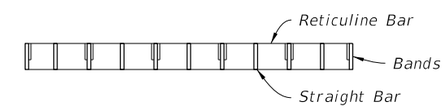

SECTION T-T

STEEL GRATE DETAIL

(Approx. 388 lbs. - See Sheet 7 For Cast Iron Grates)

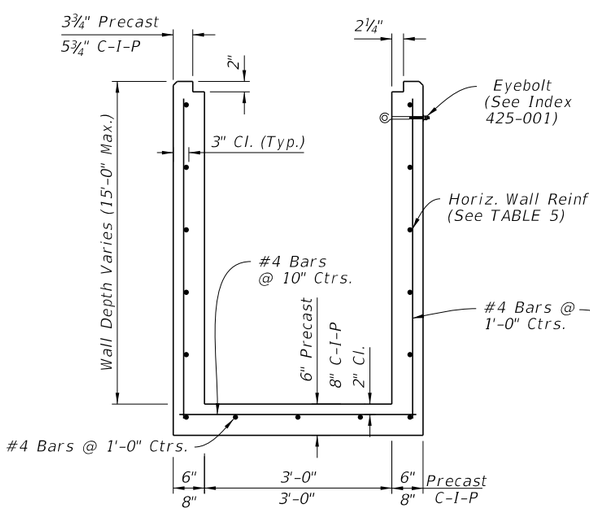

SECTION Q-Q

(Pipe Opening Not Shown)

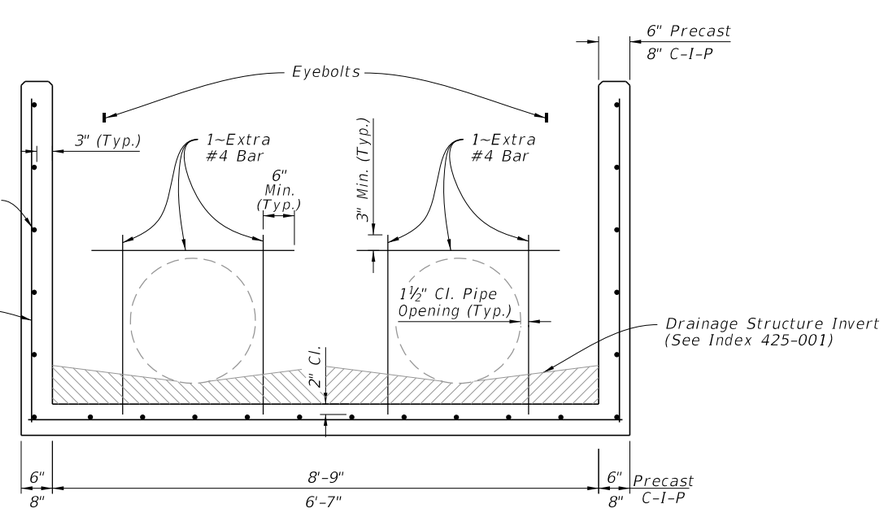

SECTION R-R

(Pipe Opening Shown)

TABLE 5 HORIZONTAL WALL REINFORCING SCHEDULE				
WALL DEPTH	SCHEDULE	AREA ($in.^2/ft.$)	MAX. SPACING	
			BARS	WWR
0' - 5'	C3.5	0.37	3½"	3"
5'-10'	D4.5	0.53	4½"	4"

NOTES:

1. Grate, Concrete Apron, and Sod not shown on structure details.
2. See Sheet 8, 9, and 10 for Concrete Apron and Sodded Area details.
3. Pipe Spacing S = 4'-3"

DIMENSIONAL AND REINFORCING DETAILS

TYPE H (4 GRATE) - DIMENSIONAL, REINFORCEMENT, AND STEEL GRATE DETAILS

NOTES:

1. Steel Grates are required on inlets with traversable slots and on Inlets where bicycle traffic is anticipated.
2. Cast Iron Grates are not permitted on Inlet Type D.

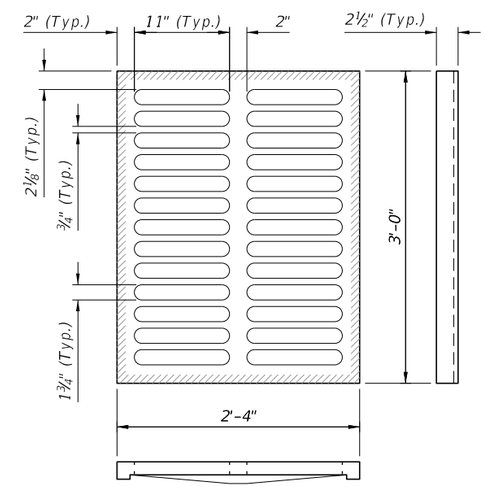

TYPE C
Approx. 235 lbs.

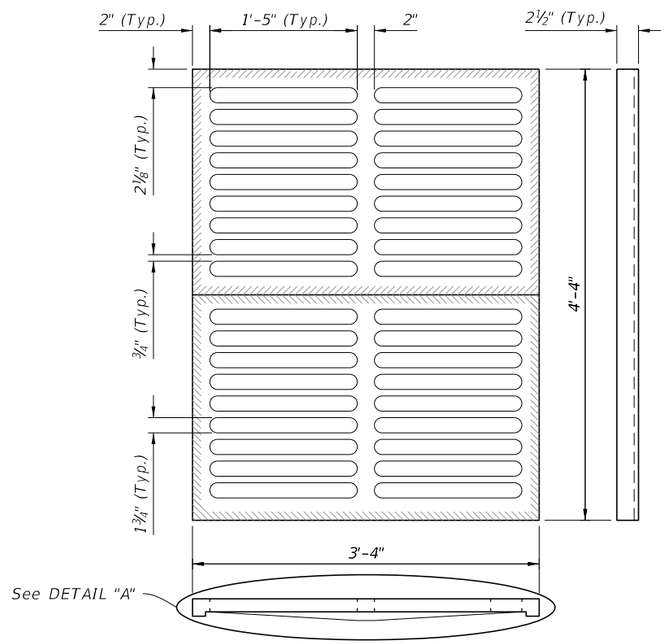

TYPE E
Approx. 465 lbs.

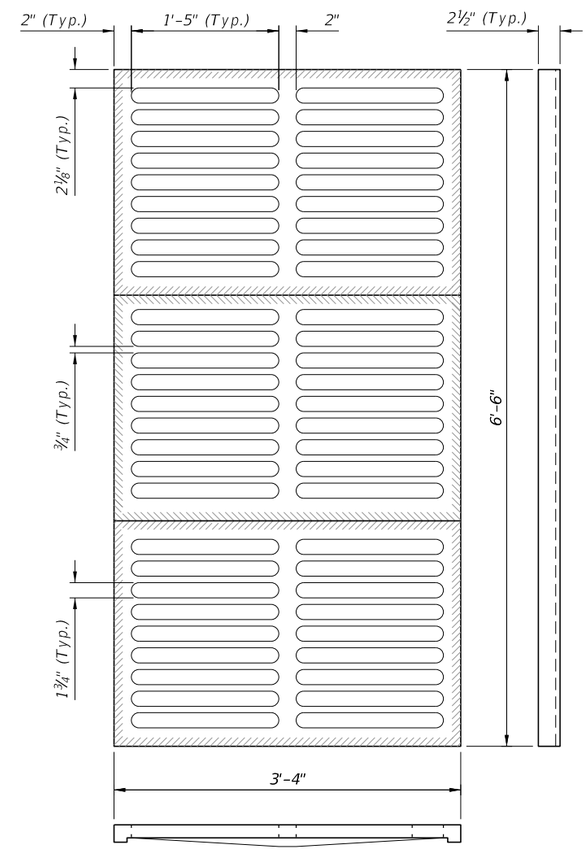

TYPE H
(3-Grate Inlet)
Approx. 725 lbs.

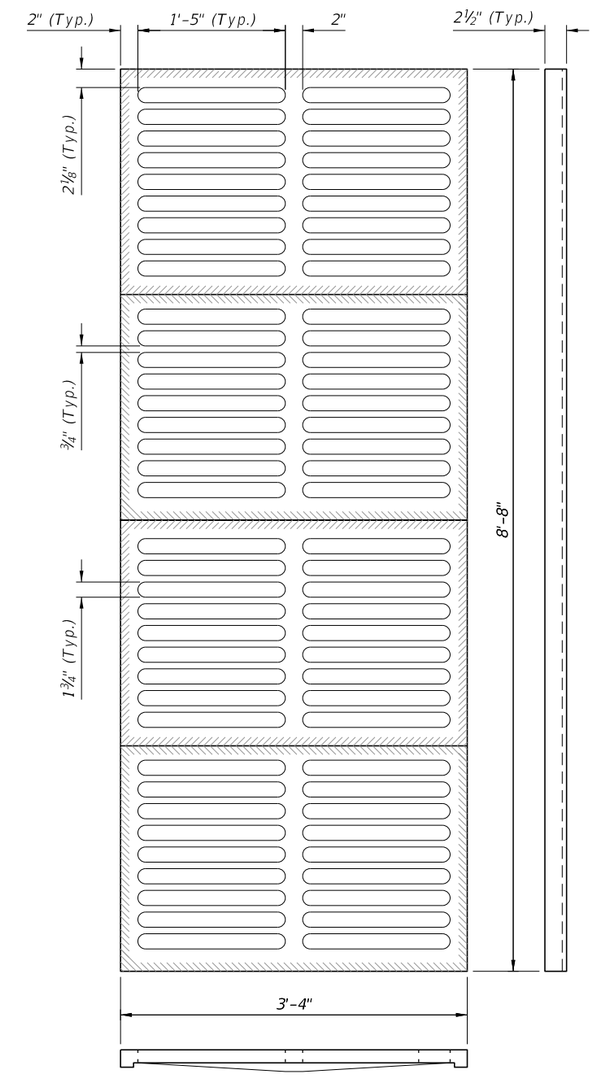

TYPE H
(4-Grate Inlet)
Approx. 967 lbs.

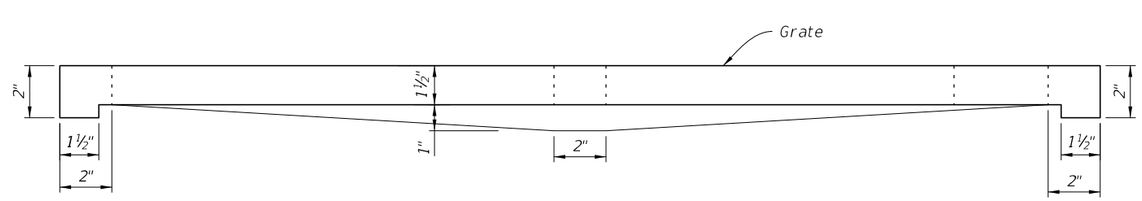

DETAIL "A"
(Typical Section)

CAST IRON GRATE DETAILS

LAST REVISION	REVISION	DESCRIPTION:			INDEX	SHEET
11/01/20			FY 2022-23 STANDARD PLANS	DITCH BOTTOM INLET TYPE C, D, E, AND H	425-052	7 of 14

9/21/2021 1:46:42 PM

TABLE 6 SOD ONLY QUANTITIES	
Inlet Type	Sod SY
C	6
D	6
E	7
H	8

TABLE 7 SOD AND CONCRETE APRON QUANTITIES		
Inlet Type	Sod SY	Conc. CY
C	8	0.30
D	9	0.36
E	9	0.37
H	11	0.45

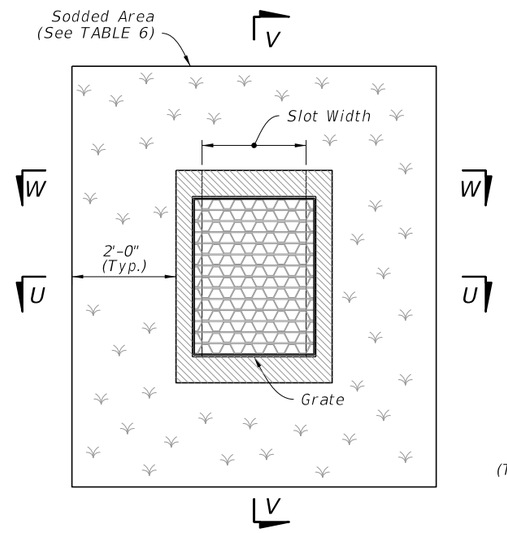

PLAN

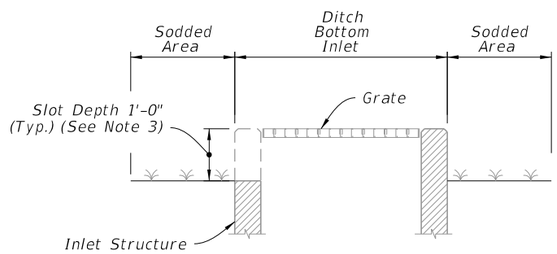

SECTION V-V

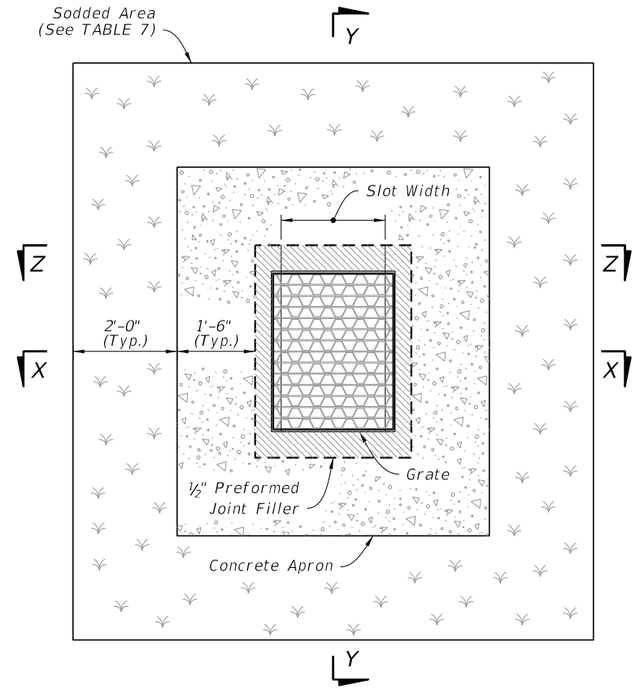

PLAN

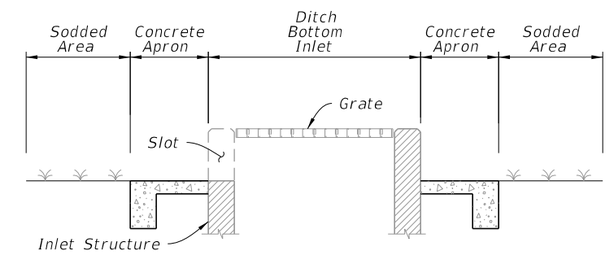

SECTION Y-Y

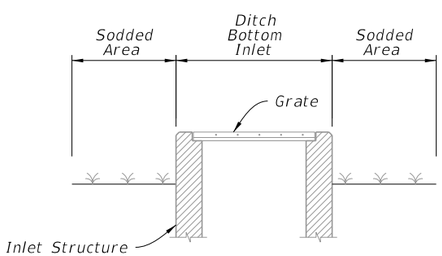

SECTION U-U

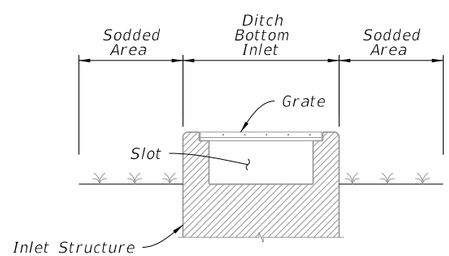

SECTION W-W

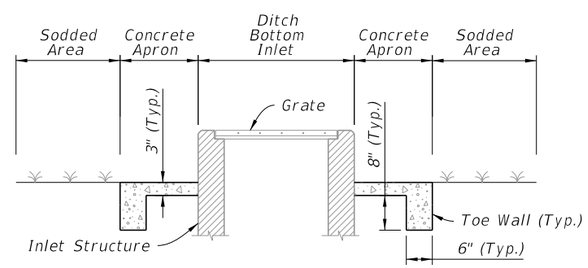

SECTION X-X

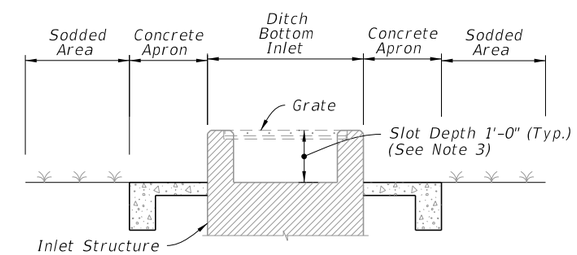

SECTION Z-Z

SODDING ONLY

(Slot Shown, Non-Slot Similar)

SODDING AND PAVEMENT

(Slot Shown, Non-Slot Similar)

NOTES:

1. Concrete Apron installed only where called for in the Plans.
2. Sod always required.
3. Slots are not permitted on sides with grate seats.

NON-TRAVERSABLE INLET DETAILS

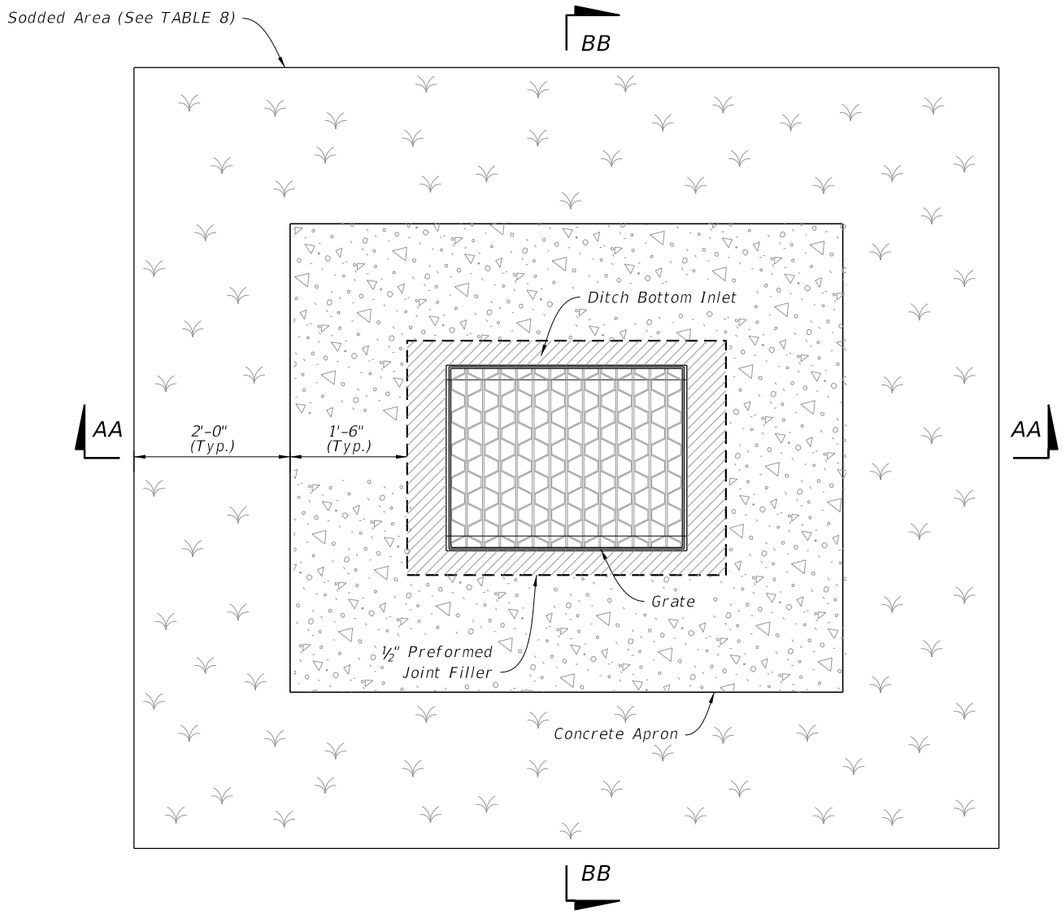

TABLE 8 CONCRETE APRON AND SOD QUANTITIES		
SOD AND PAVEMENT		
Inlet Type	Sod SY	Conc. CY
C	8	0.30
D	9	0.36
E	9	0.37
H	11	0.45

NOTES:

1. Concrete Apron to be installed only where called for in the Plans.
2. Sod always required.

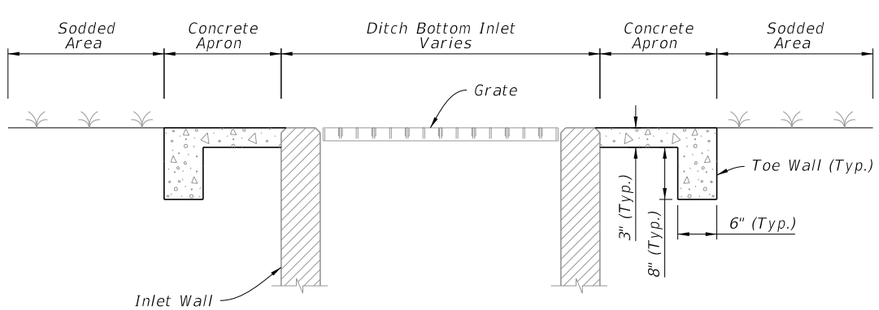

SECTION AA-AA

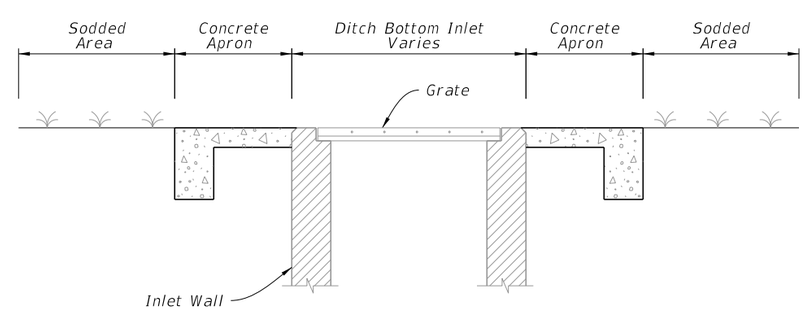

SECTION BB-BB

TRAVERSABLE INLET WITHOUT SLOT DETAILS

LAST REVISION	REVISION	DESCRIPTION:	FY 2022-23 STANDARD PLANS	DITCH BOTTOM INLET TYPE C, D, E, AND H	INDEX	SHEET
11/01/20					425-052	9 of 14

9/21/2021 1:46:44 PM

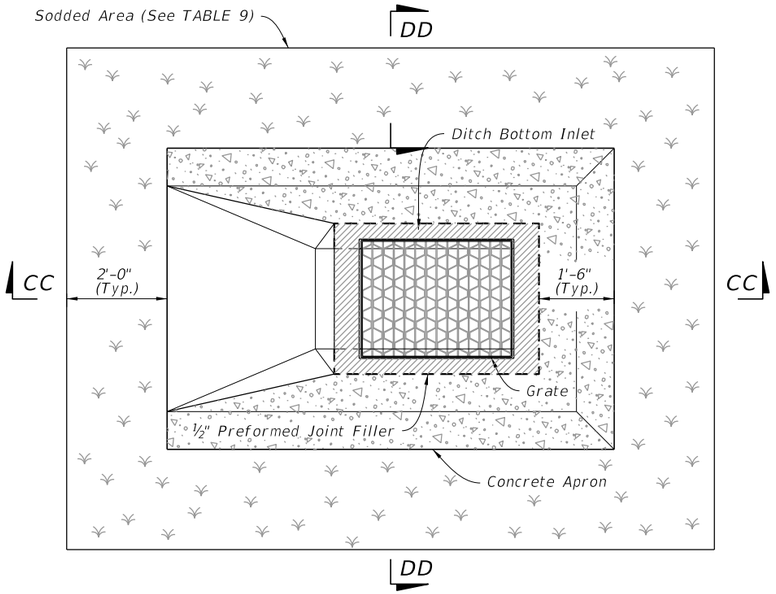

TABLE 9 CONCRETE APRON AND SOD QUANTITIES		
SINGLE SLOT		
Inlet Type	Sod SY	Conc. CY
C	12	0.77
D	14	0.91
E	14	0.91
H	--	--

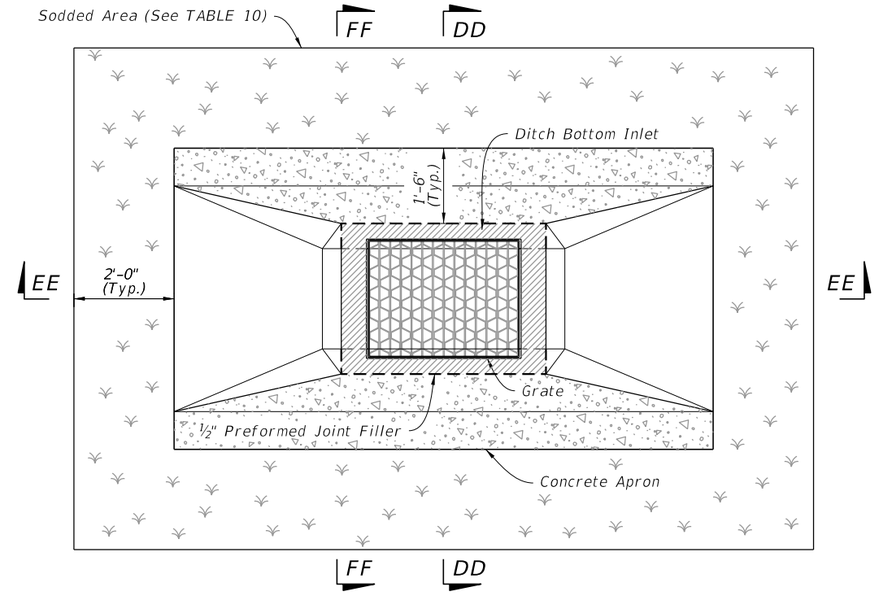

TABLE 10 CONCRETE APRON AND SOD QUANTITIES		
SLOT		
Inlet Type	Sod SY	Conc. CY
C	16	0.93
D	19	1.10
E	18	1.08
H	--	--

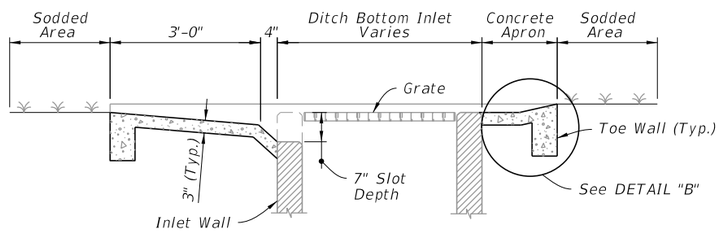

SECTION CC-CC

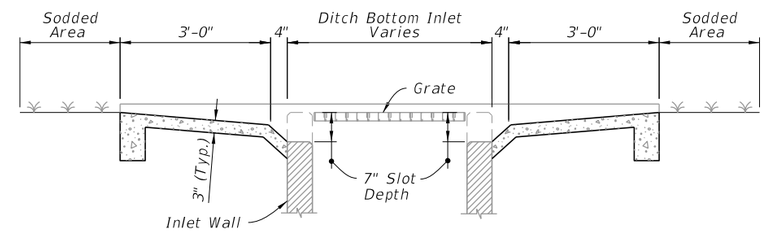

SECTION EE-EE

SINGLE SLOT

DOUBLE SLOT

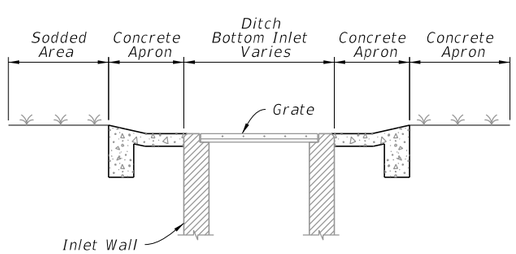

SECTION DD-DD

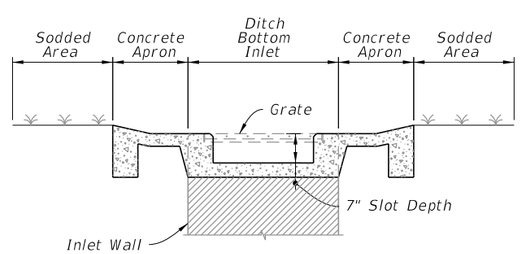

SECTION FF-FF

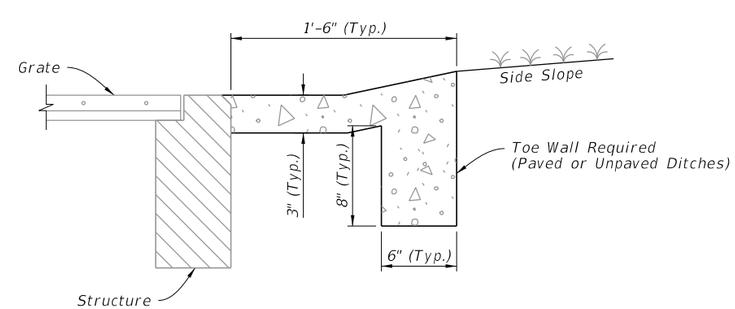

DETAIL "B"

NOTE:

Sod always required.

TRAVERSABLE INLET WITH SLOT DETAILS

LAST REVISION	REVISION	DESCRIPTION:	FY 2023-24 STANDARD PLANS	DITCH BOTTOM INLET TYPE C, D, E, AND H	INDEX	SHEET
10/01/20					425-051	10 of 14

3/30/2022 9:48:36 AM

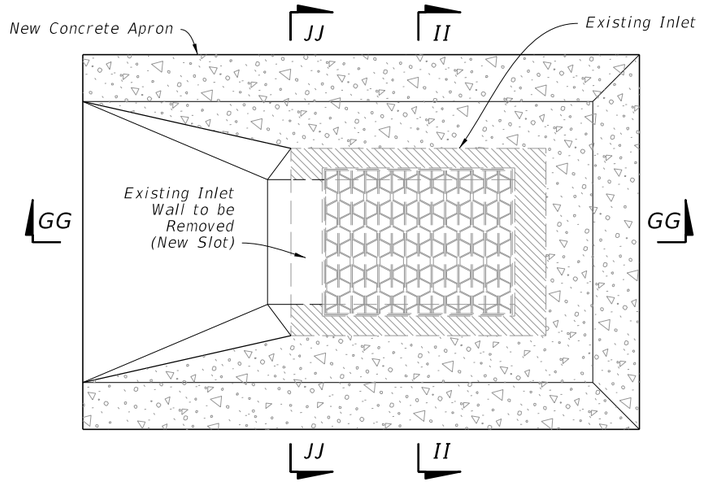

PLAN

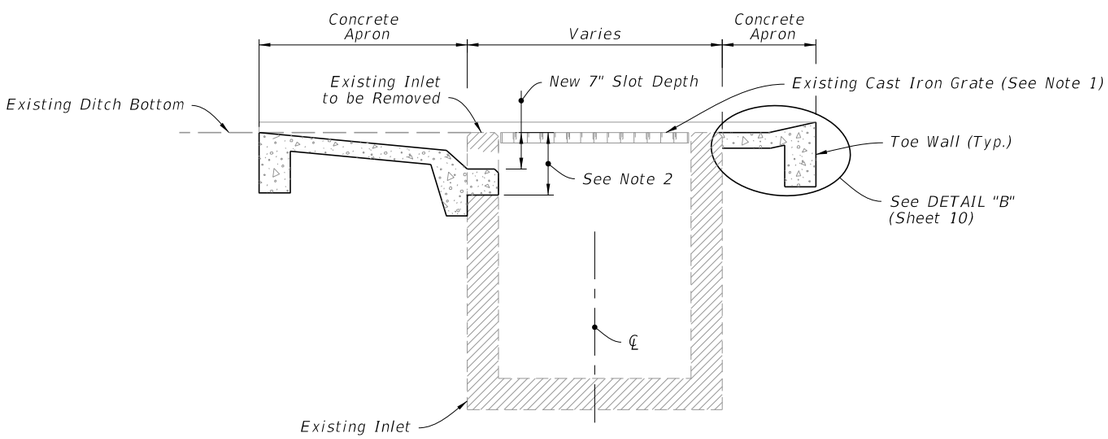

SECTION GG-GG

WITHOUT SLOT

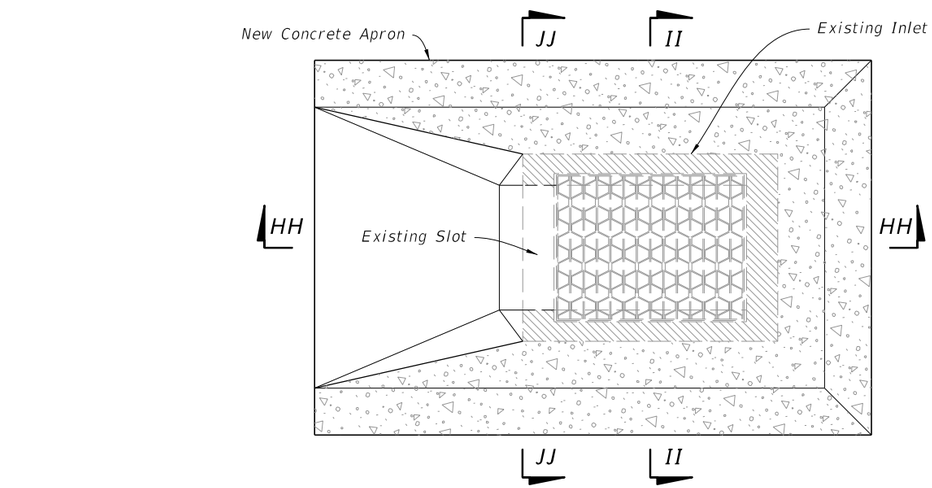

PLAN

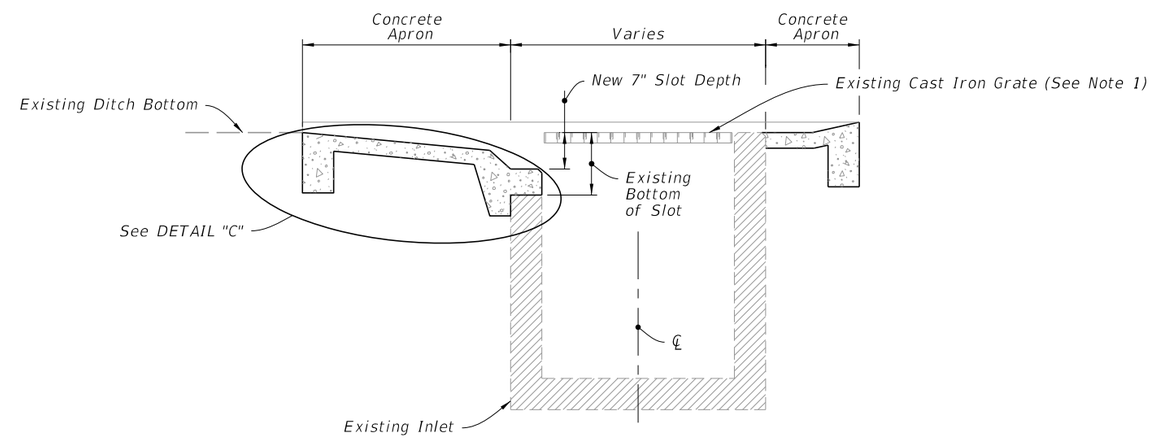

SECTION HH-HH

WITH SLOT

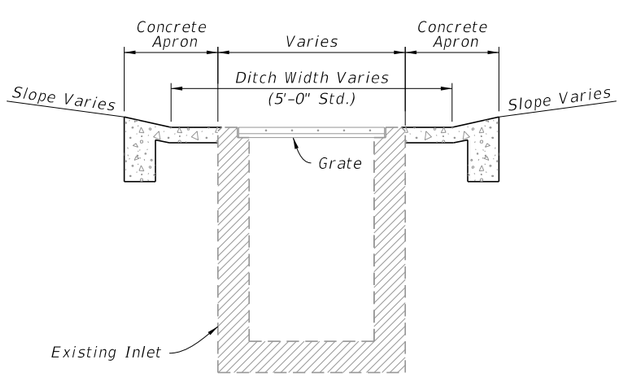

SECTION II-II

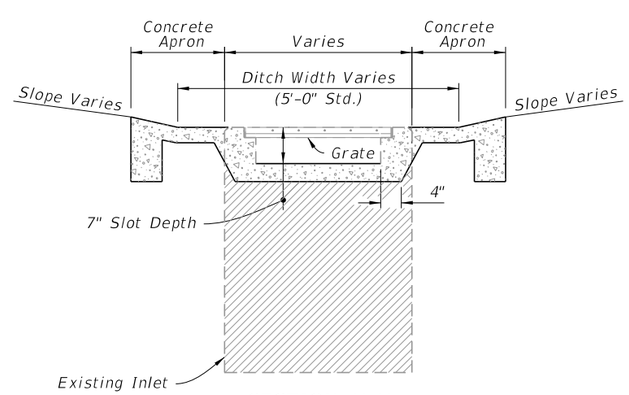

SECTION JJ-JJ

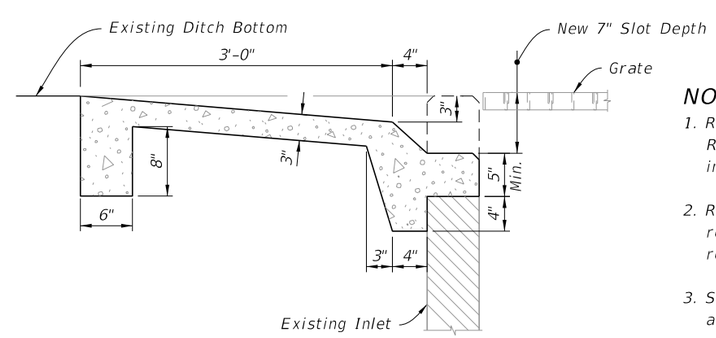

DETAIL "C"

NOTES:

1. Replace existing cast iron grate with steel grate. Replace existing steel grate when called for in the plans or as directed by the Engineer.
2. Remove existing wall to this line (exposed rebar in pavement zone may be either removed or embedded)
3. Single Slot shown, Double Slots symmetrical about the Inlet centerline.

CASE 1 - ADD TRAVERSABLE SLOTS TO EXISTING INLETS

9/21/2021 1:46:45 PM

LAST REVISION	REVISION	DESCRIPTION:			INDEX	SHEET
11/01/20			FDOT FY 2022-23 STANDARD PLANS	DITCH BOTTOM INLET TYPE C, D, E, AND H	425-052	11 of 14

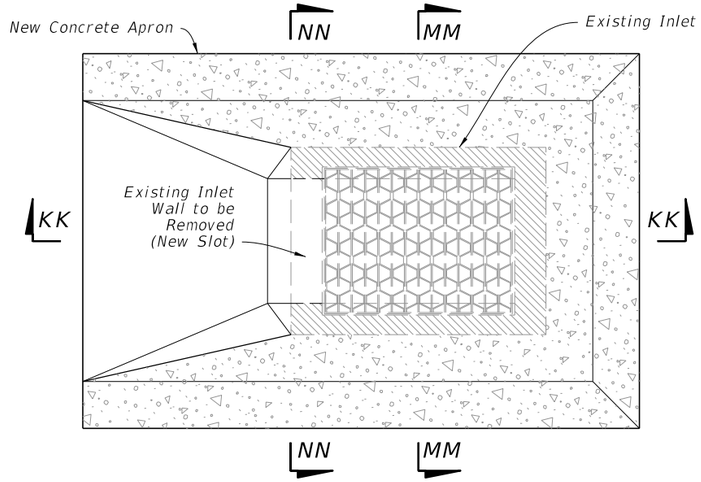

PLAN

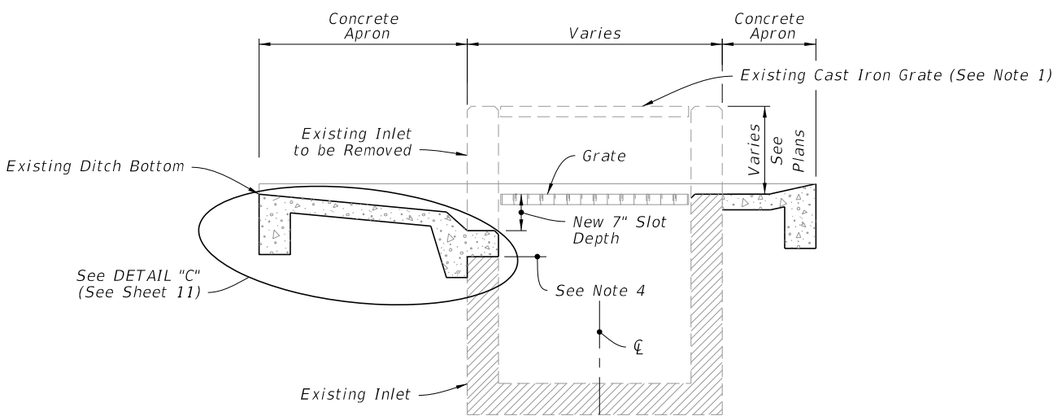

SECTION KK-KK

WITHOUT SLOT

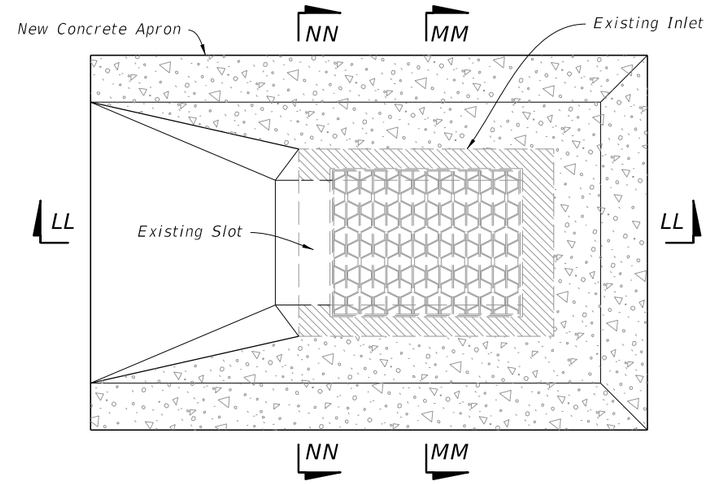

PLAN

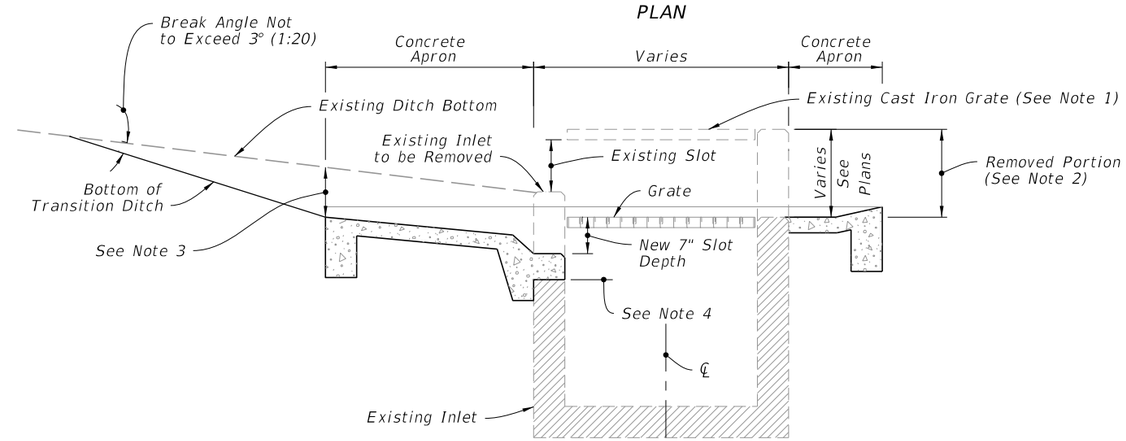

SECTION LL-LL

WITH SLOT

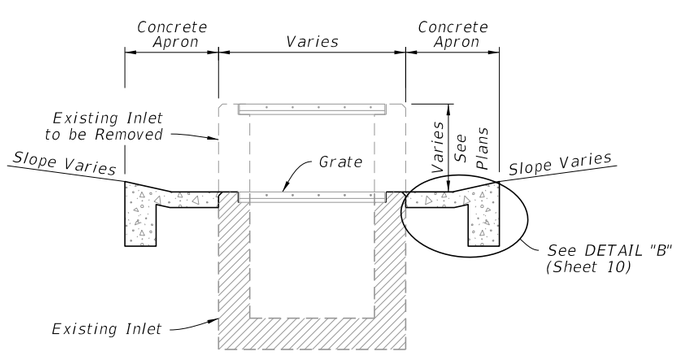

SECTION MM-MM

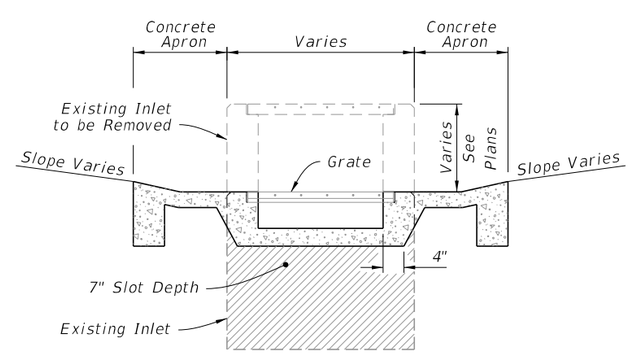

SECTION NN-NN

NOTES:

1. Existing cast iron grate to be replaced with steel grate. Existing steel reticuline grate to be replaced when called for in the Plans or as directed by the Engineer.
2. Remove this portion of box and construct new, concrete ditch pavement, seats and slot (s) (slots if required).
3. These points can be the same or nearly the same where ditch grades are flat.
4. Remove exist. wall to this line (exposed rebar in pavt. zone may be either removed or embedded).
5. Single Slot shown, Double Slots symmetrical about the Inlet centerline.

CASE 2 - ADD TRAVERSABLE SLOTS (PARTIAL) TO EXISTING INLETS

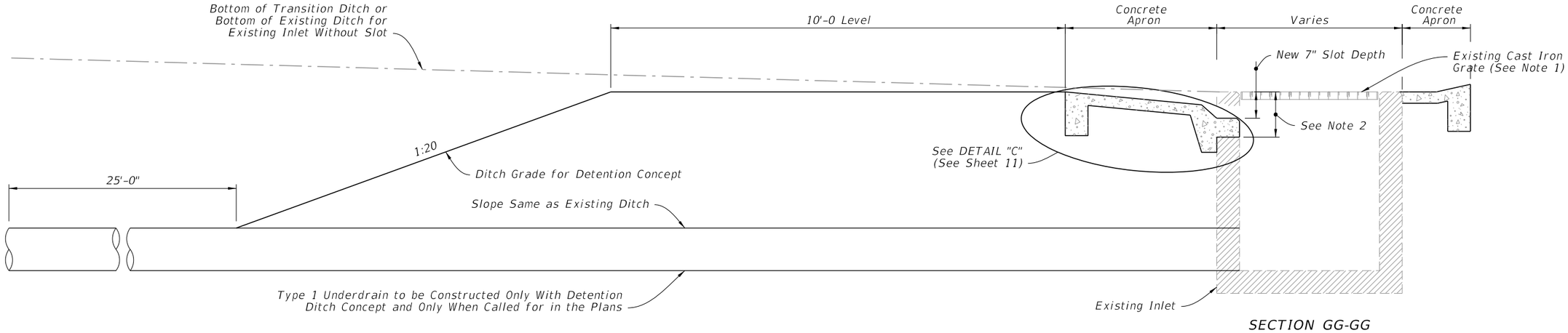

SECTION GG-GG

WITHOUT SLOT

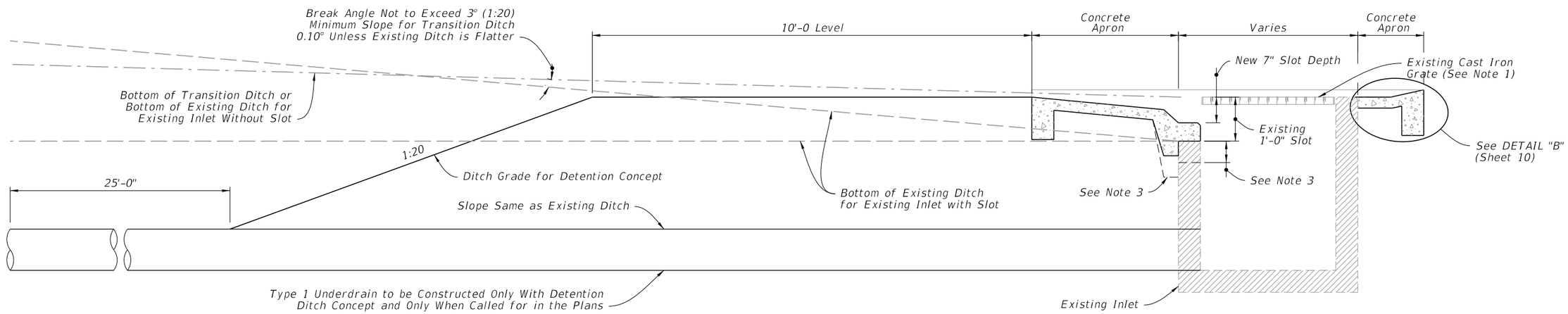

SECTION HH-HH

WITH SLOT

NOTES:

1. Existing cast iron grate to be replaced with steel grate. Existing steel reticuline grate to be replaced when called for in the Plans or as directed by the Engineer.
2. Remove existing wall to this line (exposed rebar in pavement zone may be either removed or embedded)
3. Install extra apron when existing slot exceeds 12" in depth.
4. Inlet details (With or Without Slots) similar to details on Sheet 11.

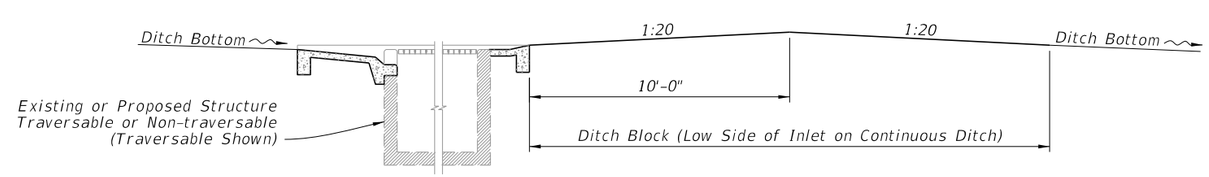

DITCH BLOCK FOR INLETS WITH OR WITHOUT SLOTS

CASE 3 - ADD TRAVERSABLE SLOTS (PARTIAL) TO EXISTING INLETS AND DITCH BLOCK

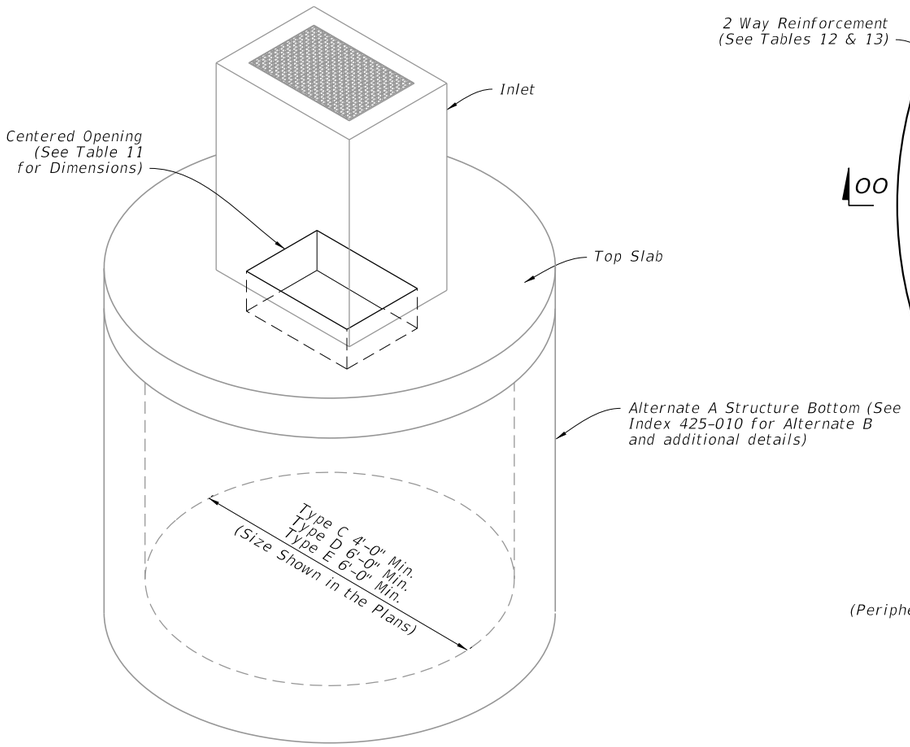

ISOMETRIC VIEW

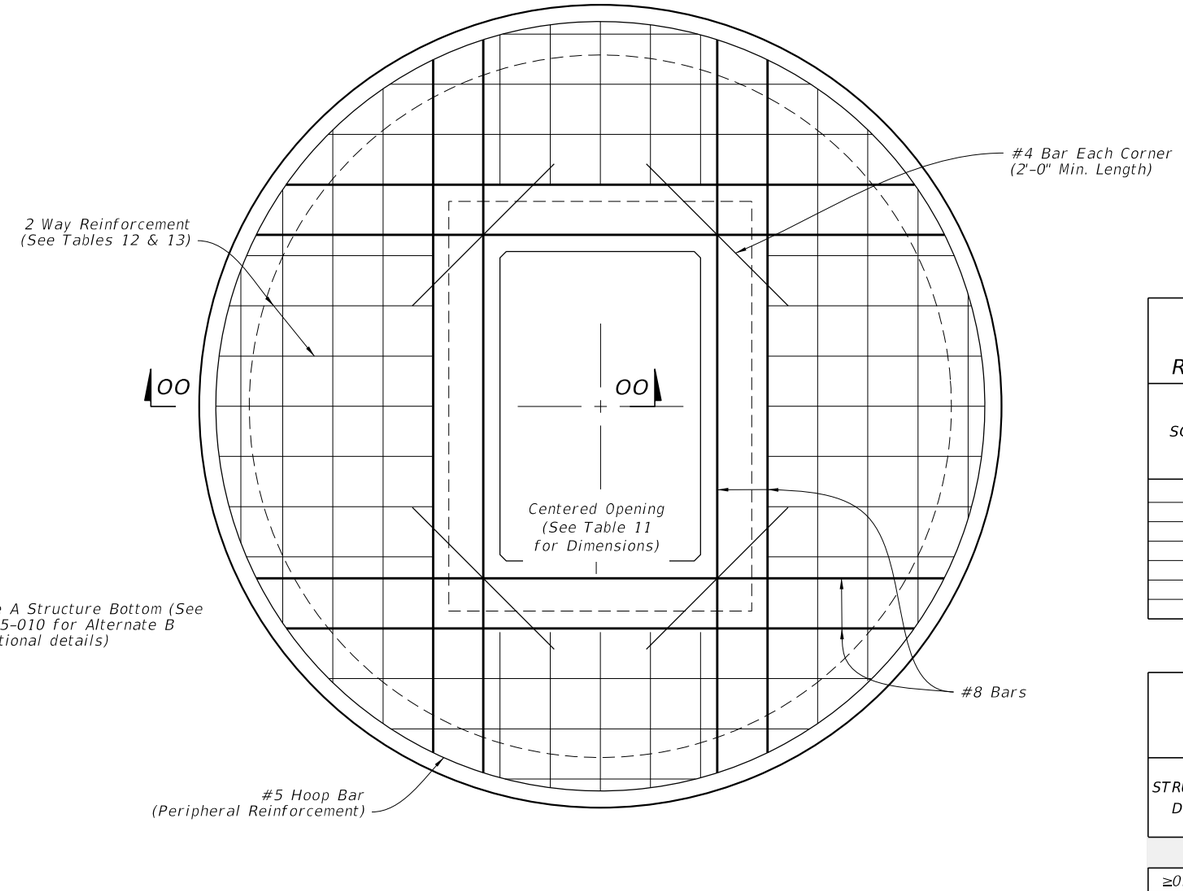

PLAN

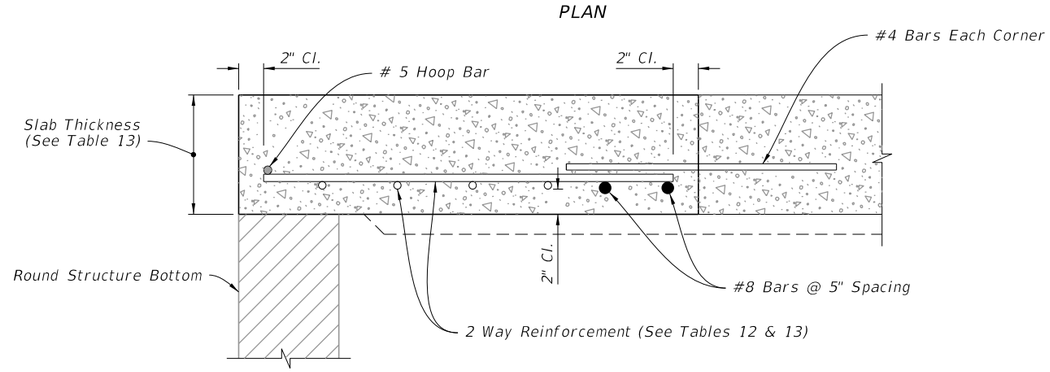

SECTION OO-OO

TOP SLAB REINFORCEMENT DETAILS

TABLE 11 TOP SLAB OPENINGS		
DIAMETER	OPENING SIZE	
	Min.	Max.
4'-0"	2'-0" x 3'-1"	2'-0" x 3'-1"
5'-0"	2'-0" x 3'-1"	3'-1" x 4'-1"
6'-0"	2'-0" x 3'-1"	3'-0" x 4'-6"
8'-0"	2'-0" x 3'-1"	3'-0" x 4'-6"

TABLE 12 TOP SLAB REINFORCING SCHEDULE	
SCHEDULE	GRADE 60 (BAR) OR 65 KSI & 70 KSI (WIRE REINFORCING) In.²/ft.
A	0.20
B	0.24
C	0.37
D	0.53
E	0.73
F	1.06
G	1.45

TABLE 13 TOP SLAB WITH CENTERED OPENING		
STRUCTURE DEPTH	SLAB THICKNESS	REINFORCING (2 WAY) SCHEDULE
SIZE: 4'-0"		
≥0.5'<40'	9½"	B
SIZE: 5'-0"		
≥0.5'<30'	9½"	C
30'-40'	9½"	D
SIZE: 6'-0"		
≥0.5'<8'	9½"	B
8'<18'	9½"	C
18'<30'	9½"	D
30'<37'	9½"	E
37'-40'	9½"	G
SIZE: 8'-0"		
≥0.5'<9'	11½"	C
9'<15'	11½"	D
15'<23'	11½"	E
23'<33'	11½"	E
33'-40'	11½"	G

ALTERNATE A STRUCTURE BOTTOM - TOP SLAB DETAILS

GENERAL NOTES:

1. Work this Index with Index 425-001 and Index 425-010.
2. When inlet is placed in areas subject to bicycle traffic, install filler bar when clearance or gap is greater than ⅝" as shown in Index 425-031.
3. These inlets may be used with Alternate B structure bottoms, Index 425-010.
4. Chamfer all exposed edges and corners ¾" chamfer or tooled to ¼" radius.
5. See Index for supplemental details.
6. Reinforcing bars are Grade 60 with 2" minimum cover unless otherwise noted. Cut or bend bars to provide 1½" clearance around pipe opening. Provide one additional #4 bar above and at each side of pipe opening as shown.
7. Dimensions are for both precast and cast-in-place inlets unless otherwise noted.
8. Quantities are for informational and estimating purposes only.

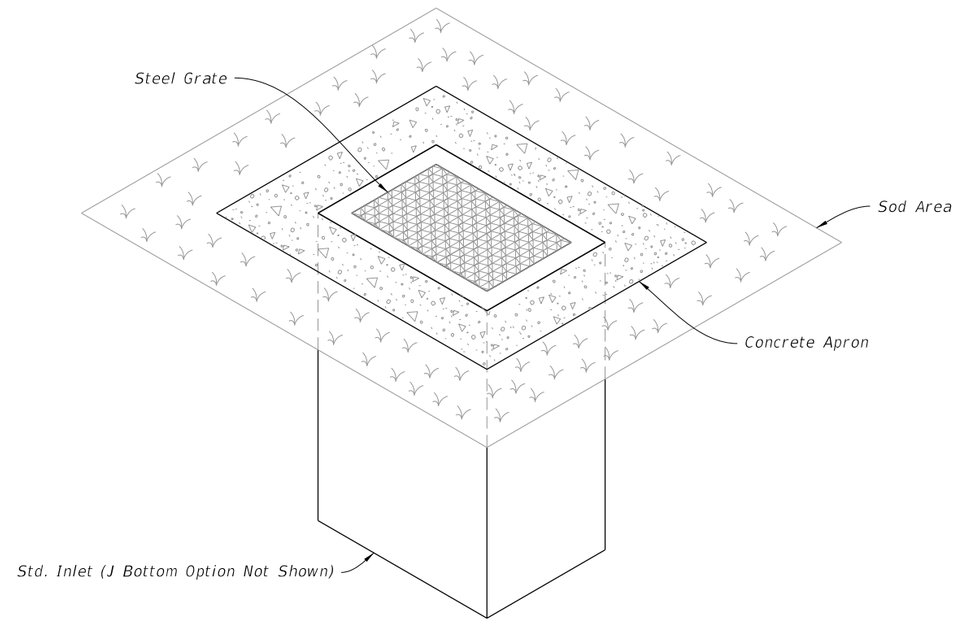

DITCH BOTTOM INLET TYPE F

(Type G Similar, Pipe Connection Not Shown)

TABLE OF CONTENTS:

Sheet	Description
1	General Notes and Contents
2	Type F - Dimensional, Reinforcing, and Grate Details
3	Type G - Dimensional, Reinforcing, and Grate Details
4	Concrete Apron and Sodded Area Details

NOTES:

1. The Grate, Concrete Apron, and Sod not shown on Inlet PLAN view. See Sheet 4 for Concrete Apron and Sodded Area details.
2. Construction joints permitted between these limits. See Index 425-001 for minimum dimensions.

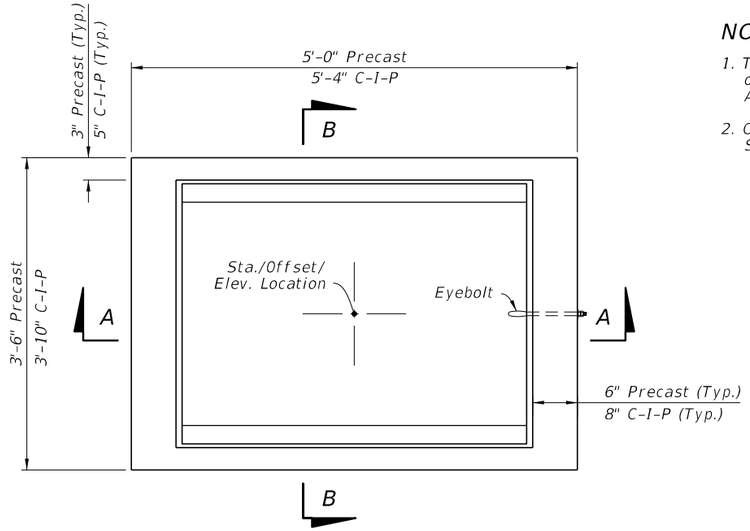

PLAN

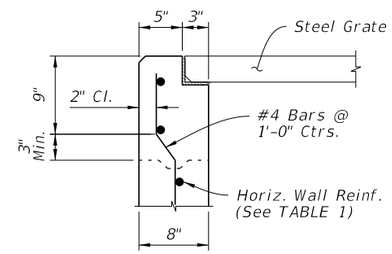

C-I-P DETAIL

DETAIL "A"

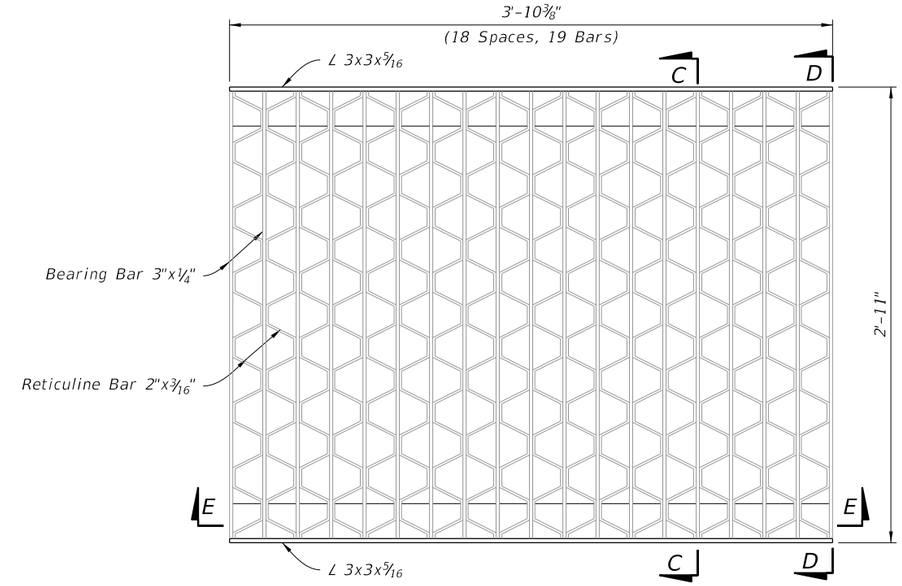

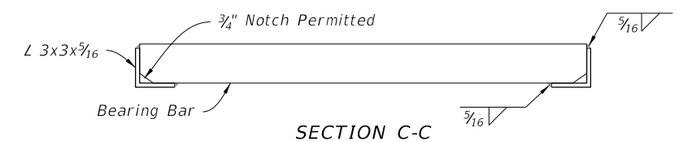

SECTION C-C

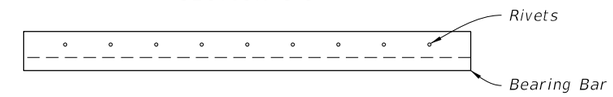

SECTION D-D

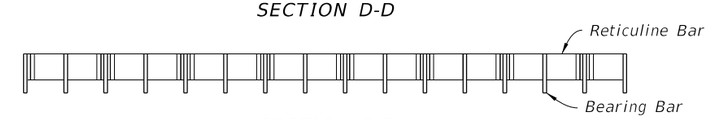

SECTION E-E

STEEL GRATE DETAIL

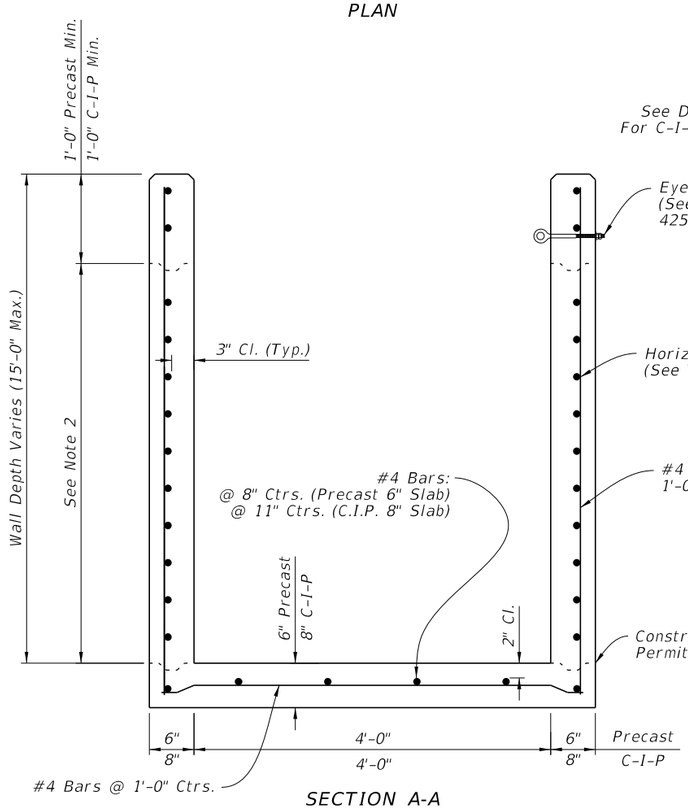

SECTION A-A
(Pipe Opening Not Shown)

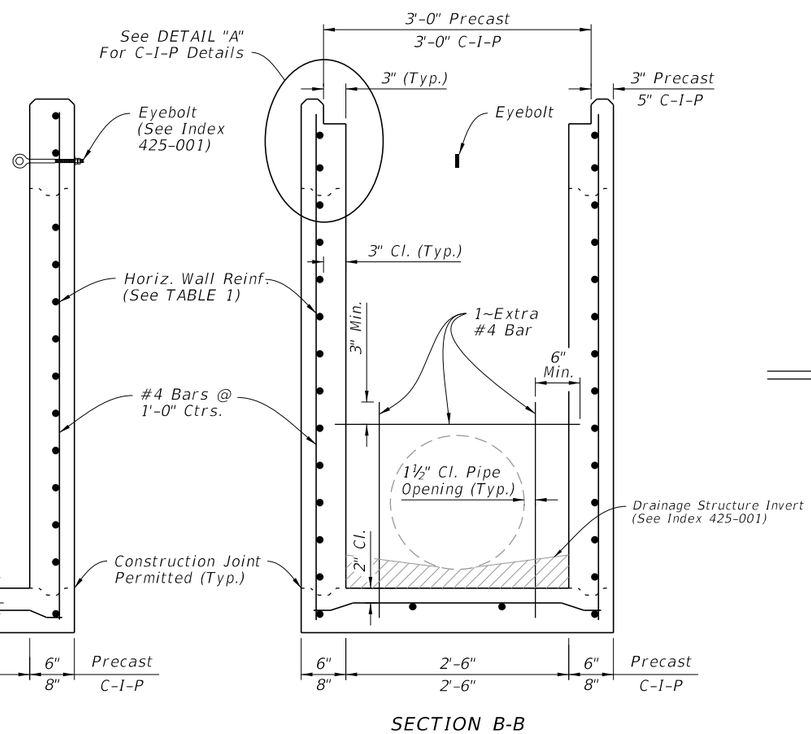

SECTION B-B
(Pipe Opening Shown)

DIMENSIONAL AND REINFORCING DETAILS

TABLE 1
HORIZONTAL WALL REINFORCING SCHEDULE

WALL DEPTH	SCHEDULE	AREA (in.²/ft.)	MAX. SPACING	
			BARS	WWR
0' - 4'	A12	0.200	12"	8"
4' - 7'	A6	0.200	6"	5"
7' - 12'	B5.5	0.240	5½"	5"
12' - 15'	Special 1	0.267	5"	4"

TYPE F - DIMENSIONAL, REINFORCING, AND GRATE DETAILS

NOTES:

1. Grate, Concrete Apron, and Sod not shown in Plan view
2. See Sheet 4 for Concrete Apron and Sodded Area details.
3. Construction joints permitted between these limits. See Index 425-001 for minimum dimensions.

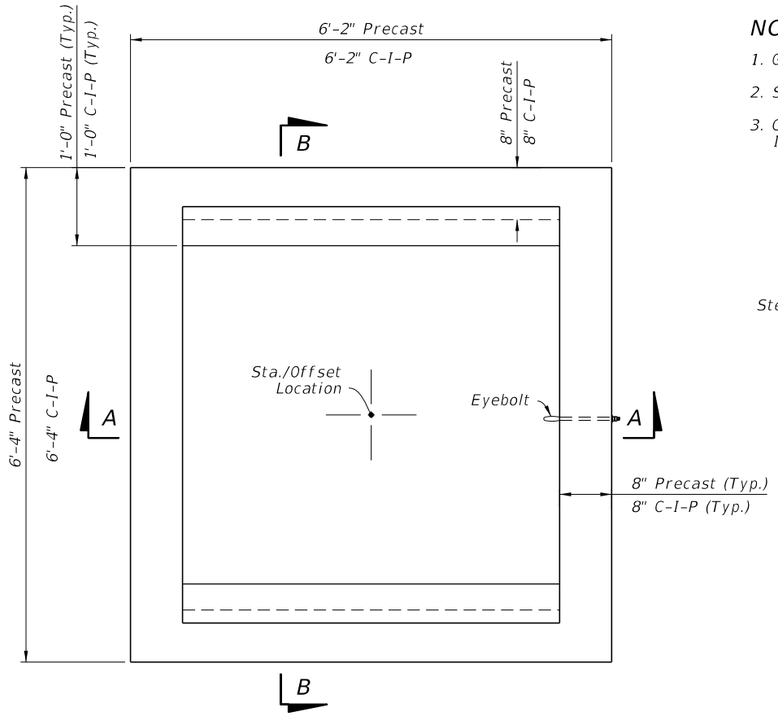

PLAN

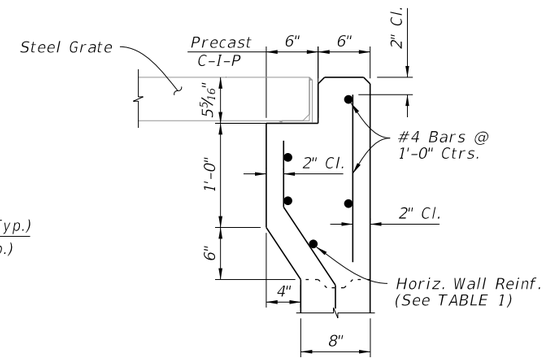

DETAIL "A"

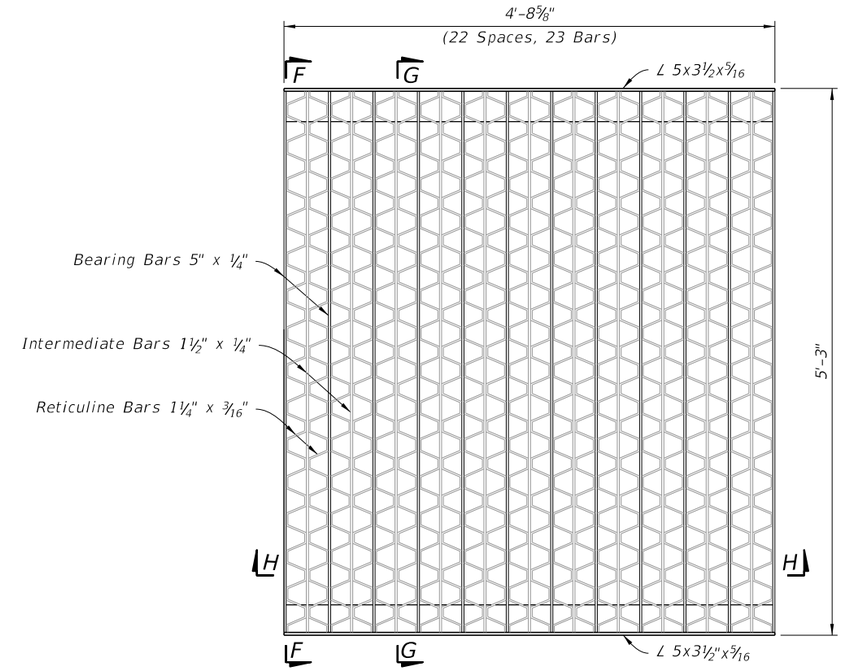

PLAN

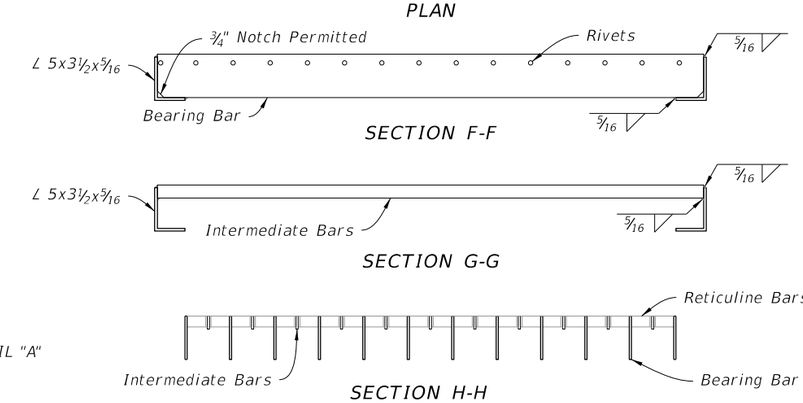

STEEL GRATE DETAIL

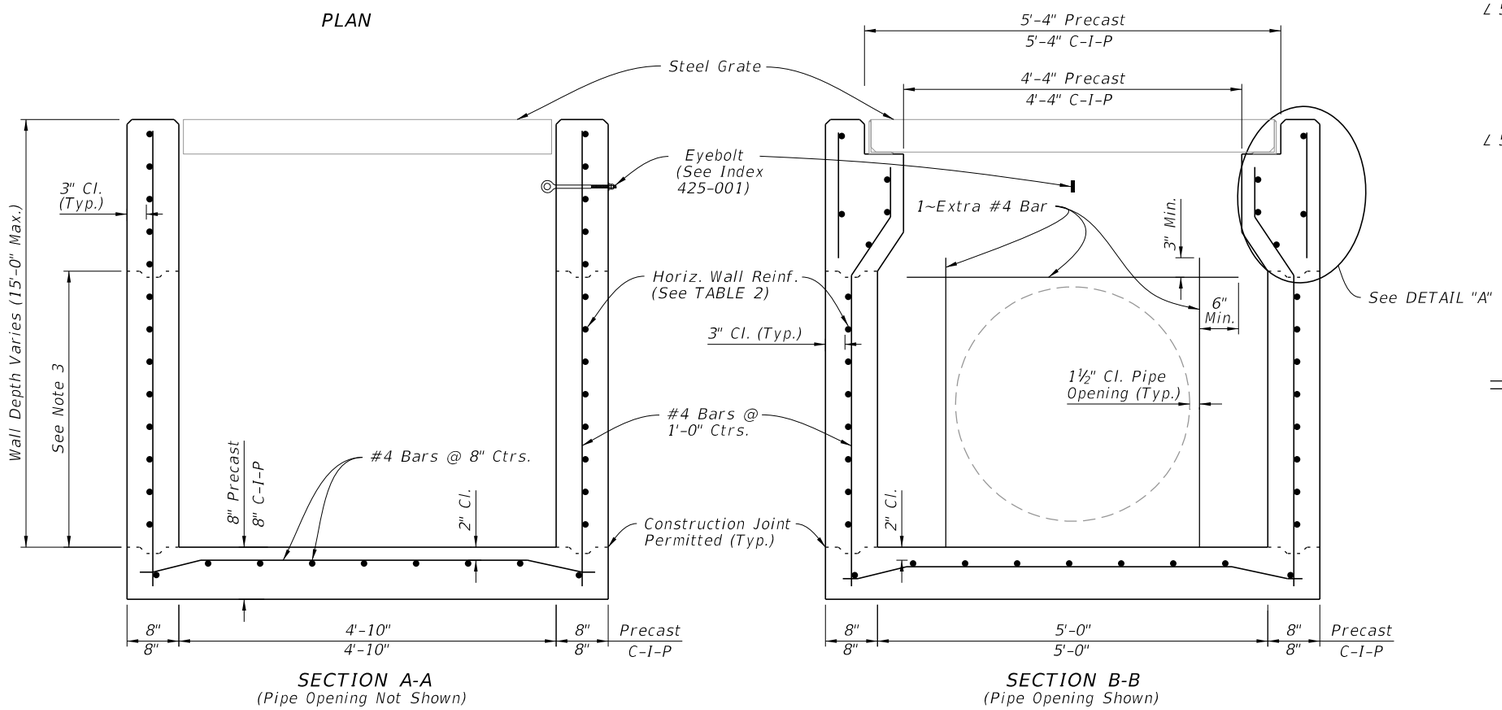

SECTION A-A
(Pipe Opening Not Shown)

SECTION B-B
(Pipe Opening Shown)

DIMENSIONAL AND REINFORCING DETAILS

TABLE 2
HORIZONTAL WALL REINFORCING SCHEDULE

WALL DEPTH	SCHEDULE	AREA (in.²/ft.)	MAX. SPACING	
			BARS	WWR
0' - 3'	A12	0.20	12"	8"
3' - 7'	A6	0.20	6"	5"
7' - 10'	B5.5	0.24	5 1/2"	5"
10' - 15'	C6.5	0.37	6 1/2"	6"

TYPE G - DIMENSIONAL, REINFORCING, AND GRATE DETAILS

TABLE 3 CONCRETE APRON AND SOD QUANTITIES			
INLET	CONCRETE (CY)	SOD W/CONCRETE (SY)	SOD ONLY (SY)
F	0.43	10	6
G	0.34	9	7

NOTES:

1. Concrete Apron to be installed only where called for in the Plans.
2. Sod always required.

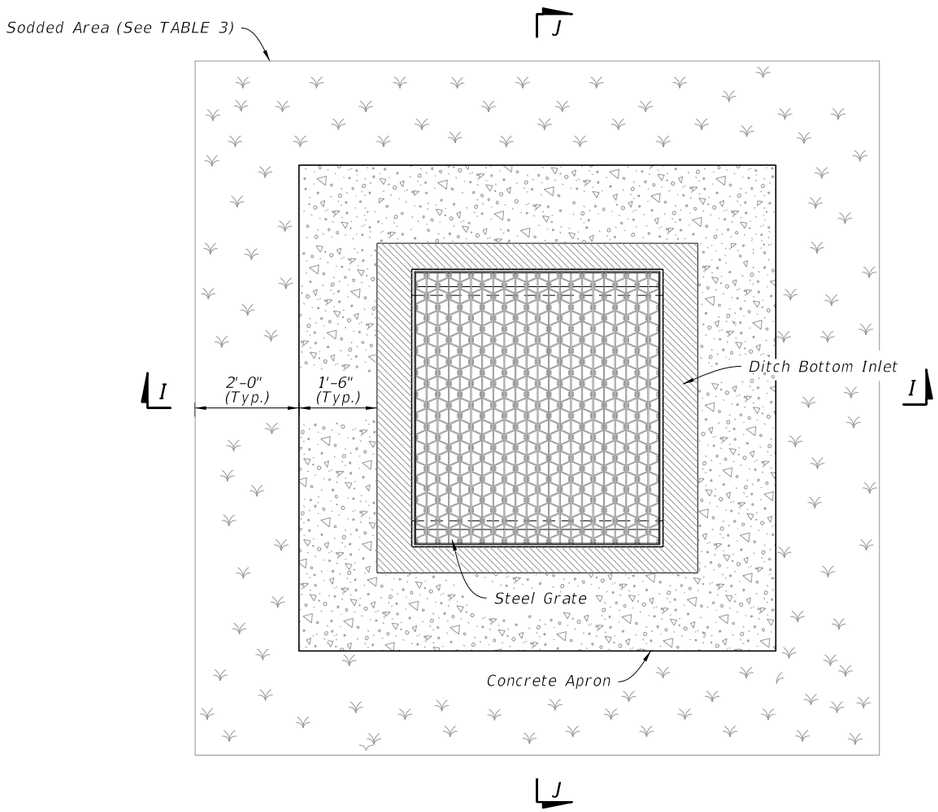

PLAN

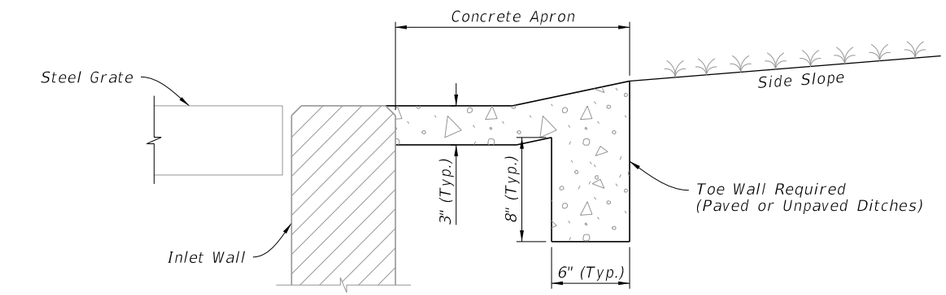

DETAIL "A"

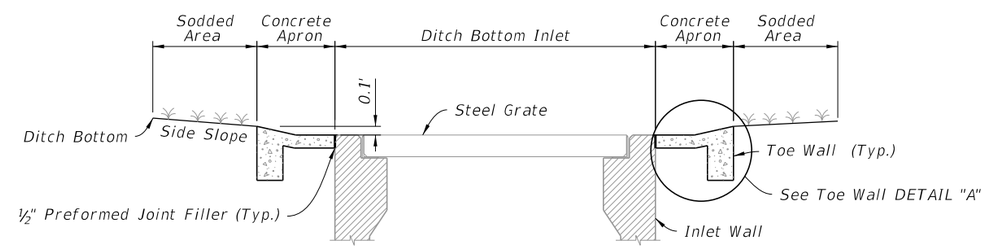

SECTION J-J

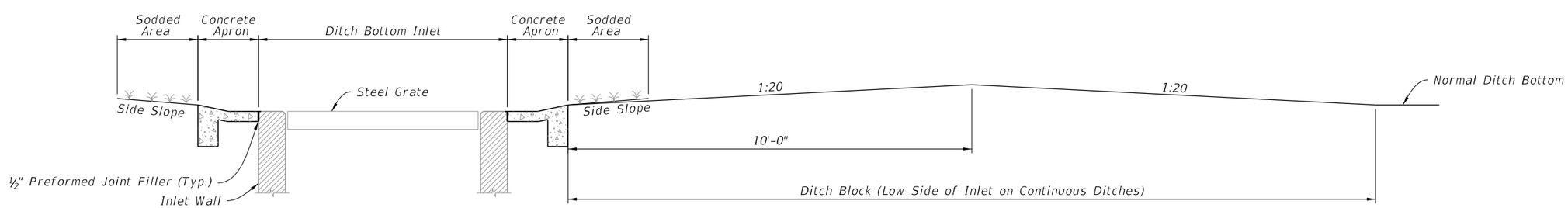

SECTION I-I AND DITCH BLOCK DETAIL

CONCRETE APRON AND SODDED AREA DETAILS

LAST REVISION	REVISION	DESCRIPTION:			INDEX	SHEET
11/01/20			FY 2022-23 STANDARD PLANS	DITCH BOTTOM INLET TYPE F AND G	425-053	4 of 4

9/21/2021 1:46:50 PM

GENERAL NOTES:

1. Work this Index with Index 425-001 and Index 425-010.

2. Reinforcing bars are Grade 60 bars with 2" minimum cover unless otherwise noted. See Index 425-001 for equivalent area of welded wire fabric. Cut or bend bars out of way of pipe when necessary; bars to clear pipe by 1½".

3. Chamfer all exposed edges and corners ¾" or tooled to ¼" radius.

4. Dimensions are for both precast and cast-in-place inlets unless otherwise noted.

5. Quantities are for informational and estimating purposes only.

TABLE OF CONTENTS:

Sheet	Description
1	General Notes and Contents
2	Dimensional and Reinforcing Details
3	Grate, Concrete Apron, and Sodded Area Details
4	Alternate A Structure Bottom - Top Slab Details

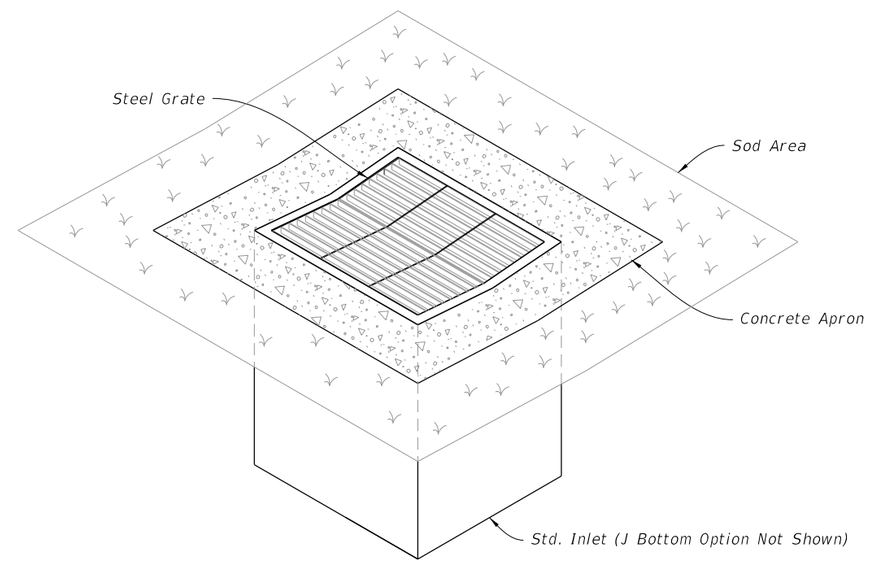

DITCH BOTTOM INLET TYPE J
(Pipe Connection Not Shown)

9/21/2021 1:46:51 PM

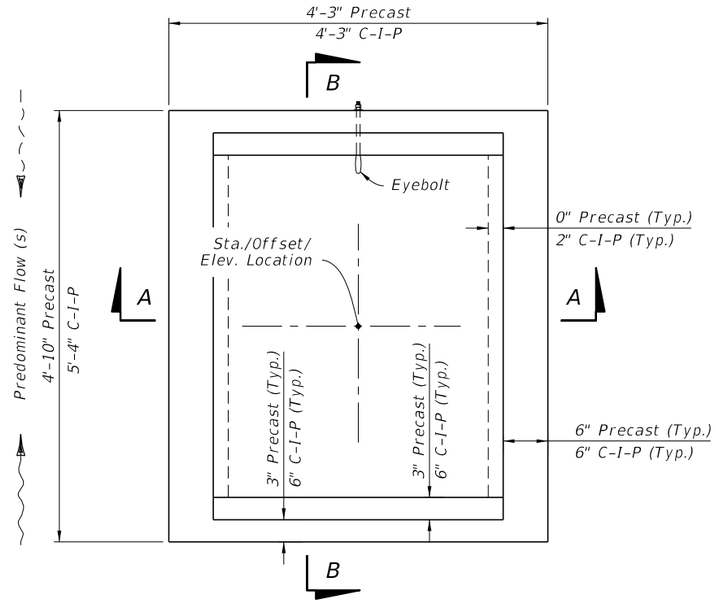

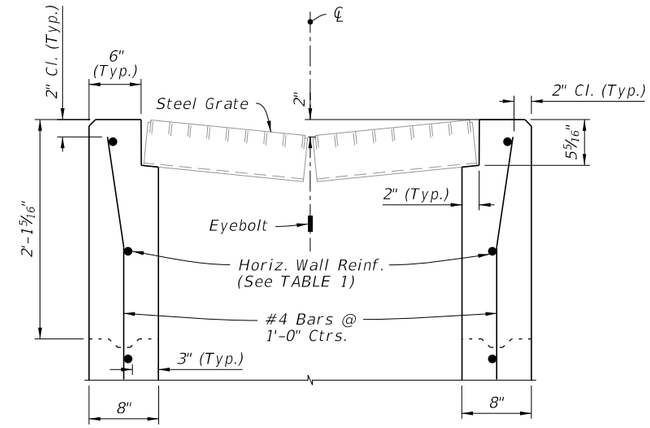

DETAIL "A"

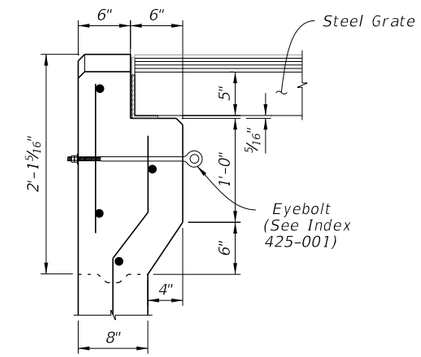

DETAIL "B"

CAST-IN-PLACE OPTION

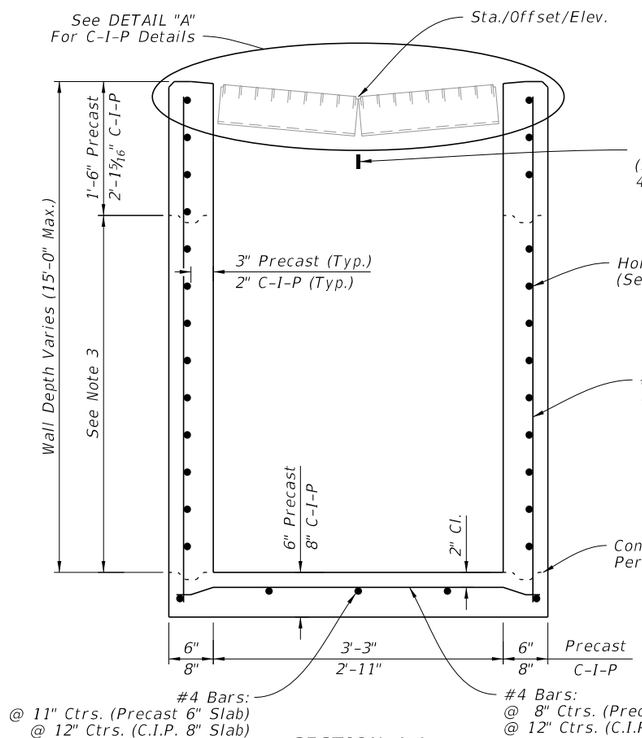

SECTION A-A

(Pipe Opening Not Shown)

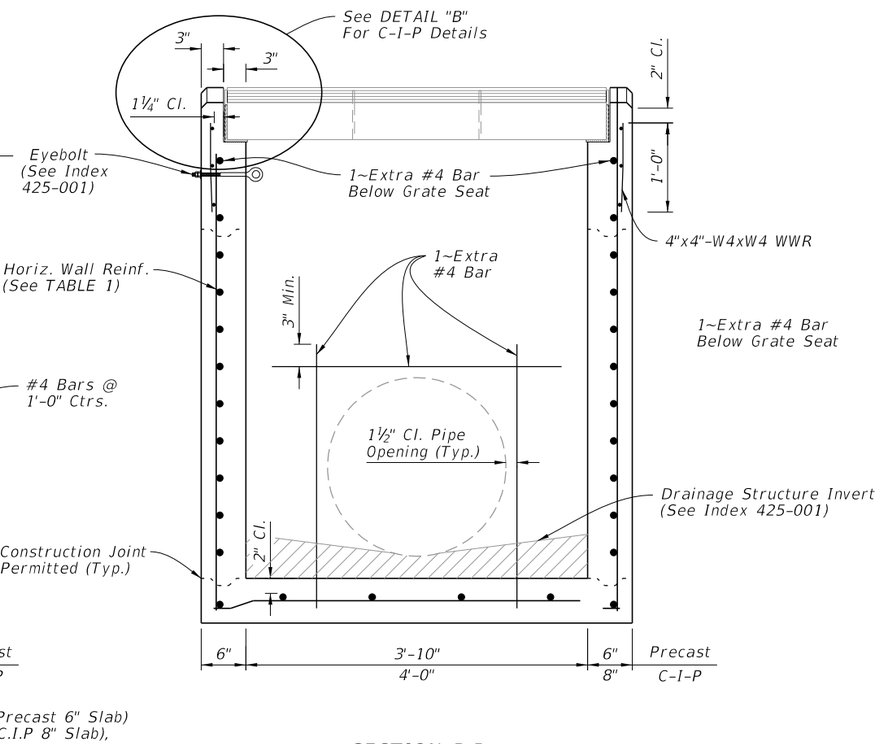

SECTION B-B

(Pipe Opening Shown)

TABLE 1 HORIZONTAL WALL REINFORCING SCHEDULE				
WALL DEPTH	SCHEDULE	AREA (in.²/ft.)	MAX. SPACING	
			BARS	WWR
0' - 4'	A12	0.20	12"	8"
4' - 9'	A6	0.20	6"	5"
9' - 12'	A4	0.24	4"	3"
9' - 15'	B5.5	0.24	5½"	5"

NOTES:

1. Grate, Concrete Apron, and Sod not shown in Plan View.
2. See Sheet 3 for Concrete Apron and Sodded Area details.
3. Construction joints permitted between these limits. See Index 425-001 for minimum dimensions.

DIMENSIONAL AND REINFORCING DETAILS

DIMENSIONAL AND REINFORCING DETAILS

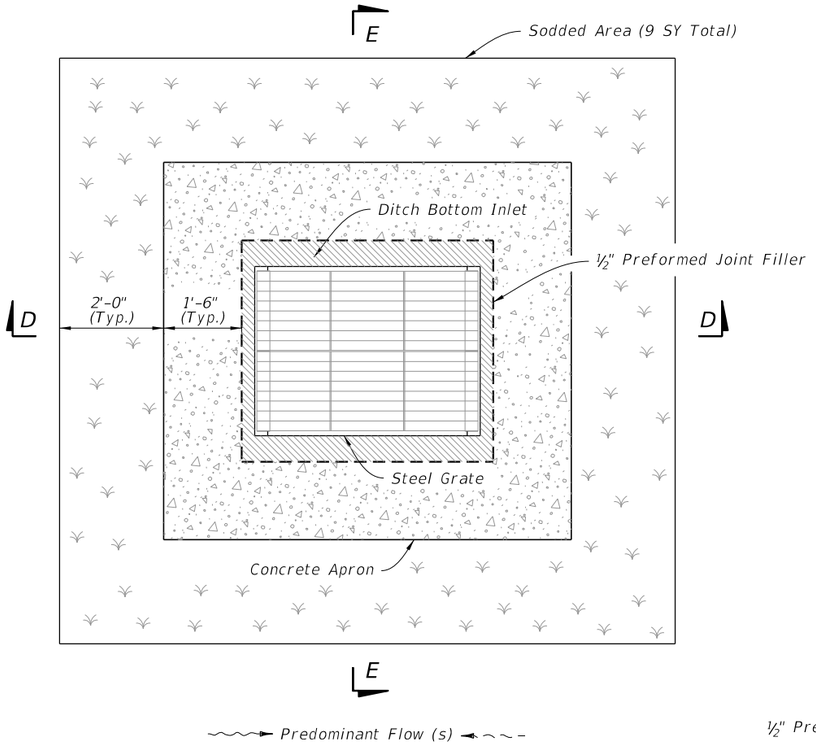

PLAN

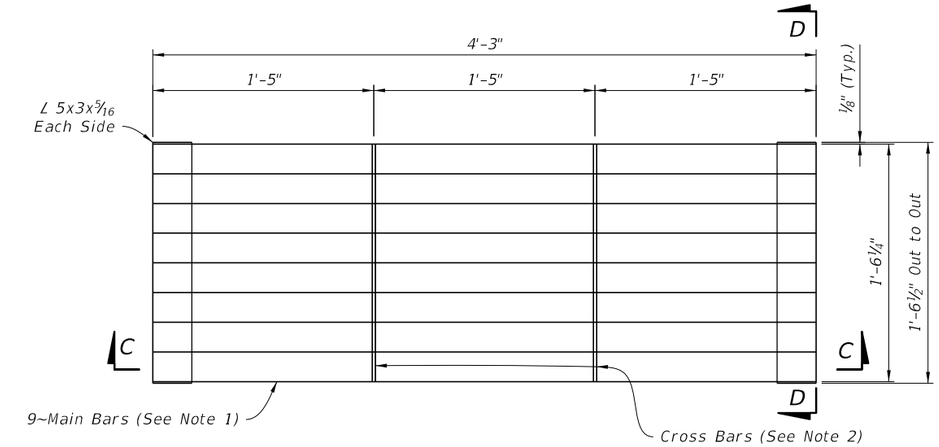

PLAN

NOTES:

1. Main Bars are 5"x¼" and are notched for Cross Bars.
2. Cross Bars are 1¾"x¼" and continuously welded at Main Bar Notches.
3. Main Bars and Cross Bars are flush on top.

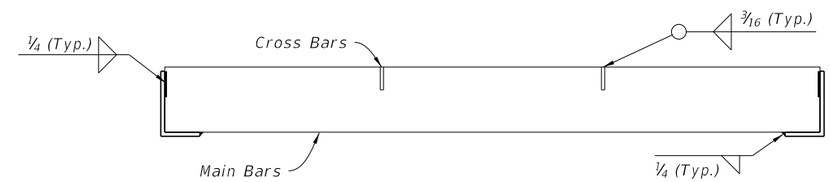

SECTION C-C

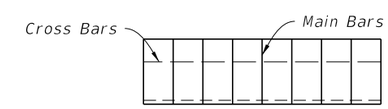

SECTION D-D

STEEL GRATE DETAIL

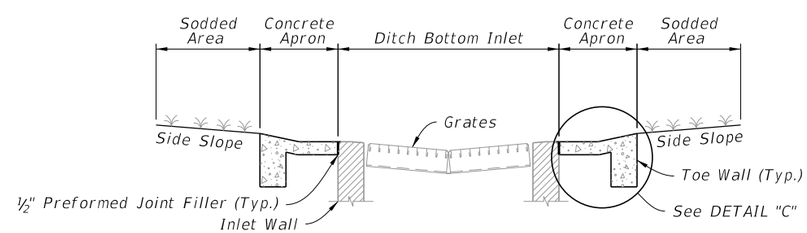

SECTION E-E

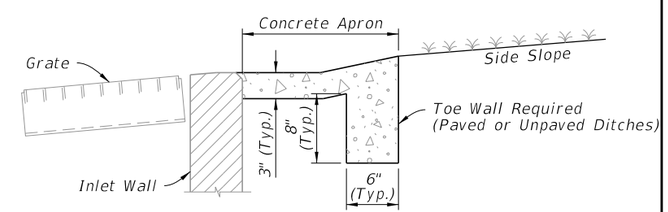

DETAIL "C"

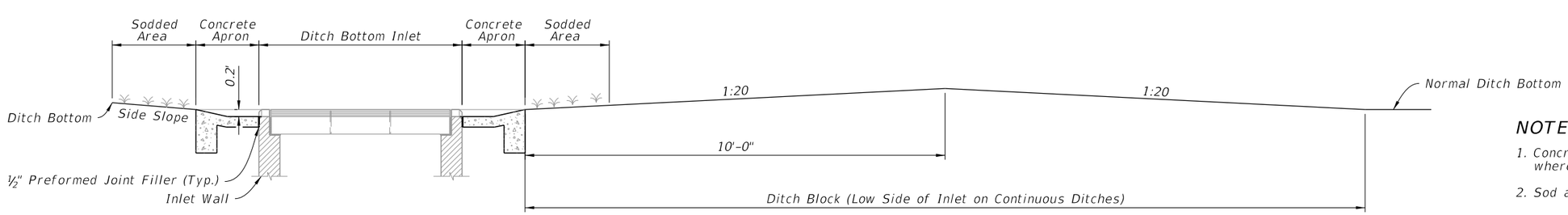

SECTION D-D AND DITCH BLOCK DETAILS

NOTES:

1. Concrete Apron to be installed only where called for in the Plans.
2. Sod always required.

CONCRETE APRON AND SODDED AREA DETAILS

GRATE, CONCRETE APRON, AND SODDED AREA DETAILS

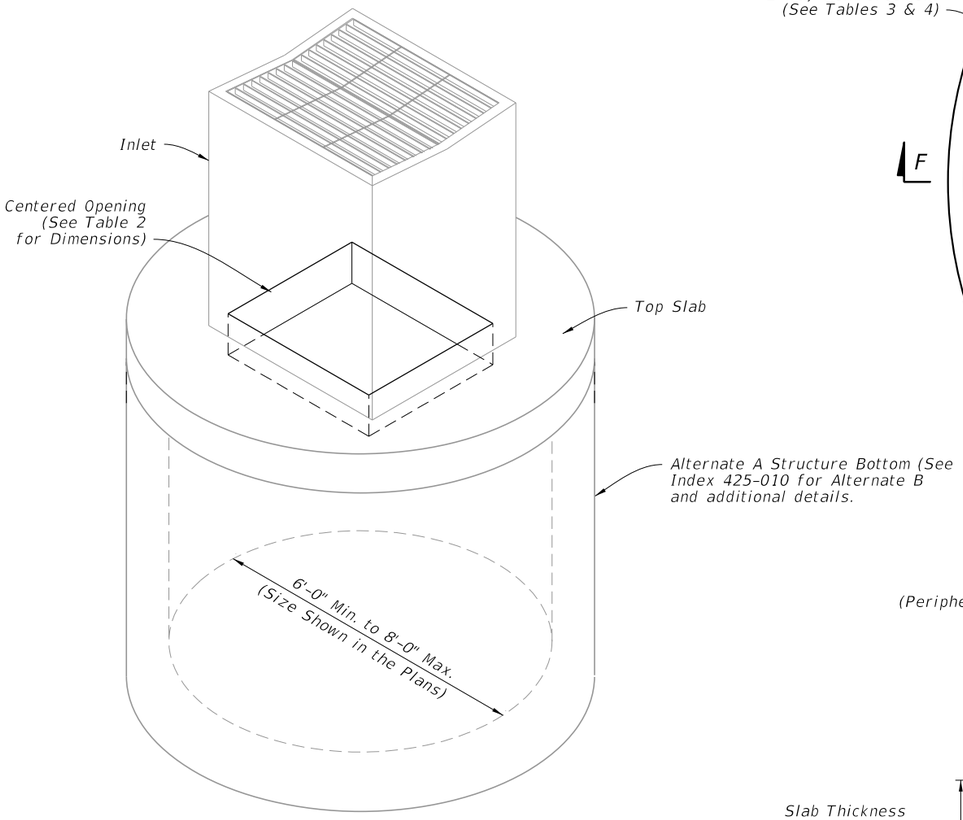

ISOMETRIC VIEW

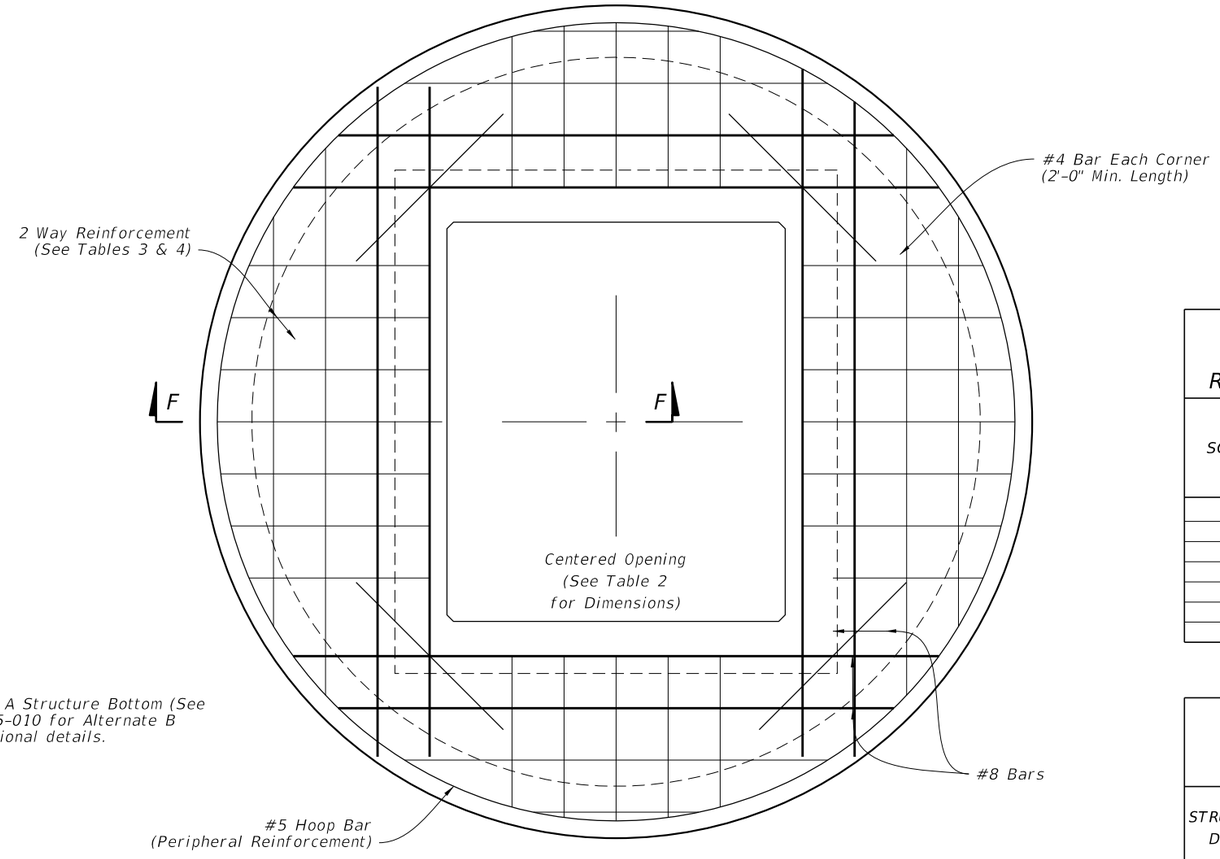

PLAN

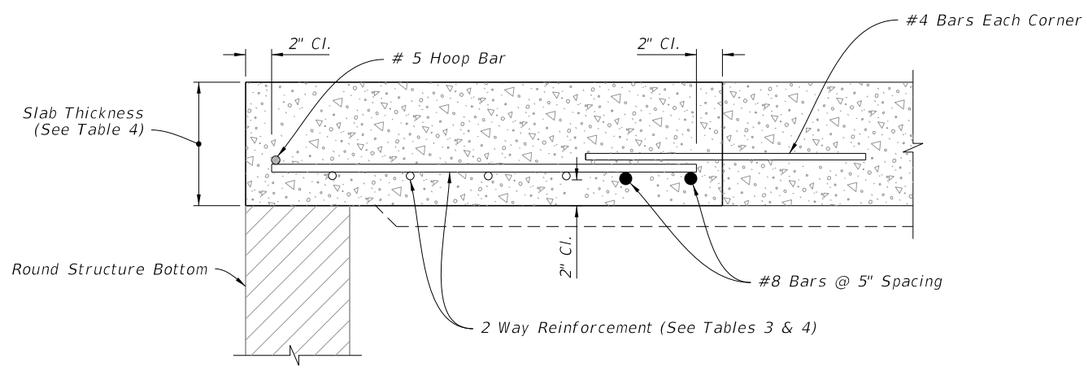

SECTION F-F

TOP SLAB REINFORCEMENT DETAILS

TABLE 3 TOP SLAB REINFORCING SCHEDULE	
SCHEDULE	GRADE 60 (BAR) OR 65 KSI & 70 KSI (WIRE REINFORCING) In.²/ft.
A	0.20
B	0.24
C	0.37
D	0.53
E	0.73
F	1.06
G	1.45

TABLE 4 TOP SLAB WITH CENTERED OPENING		
STRUCTURE DEPTH	SLAB THICKNESS	REINFORCING (2 WAY) SCHEDULE
SIZE: 6'-0"		
0.5'<8'	9½"	B
8'<18'	9½"	C
18'<30'	9½"	D
30'<37'	9½"	E
37'-40'	9½"	G
SIZE: 8'-0"		
≥0.5'<9'	11½"	C
9'<15'	11½"	D
15'<23'	11½"	E
23'<33'	11½"	E
33'-40'	11½"	G

TABLE 2 TOP SLAB OPENING		
BOTTOM STRUCTURE DIAMETER	OPENING SIZE	
	Min.	Max.
6'-0" to 8'-0"	3'-8" x 4'-2"	3'-10" x 4'-2"

ALTERNATE A STRUCTURE BOTTOM - TOP SLAB DETAILS

GENERAL NOTES:

1. Work this Index with Index 425-001 and Index 550-002.

2. Chamfer all exposed edges and corners ¾" or tooled to ¼" radius.

3. Use Class II concrete for inlet and anti-vortex wall.

4. Use Grade 60 reinforcing bars with 2" minimum cover unless otherwise noted. See Index 425-001 for equivalent area of welded wire reinforcing (WWR). Cut or bend bars for 1 ½" clearance around pipe opening. Bend top and corner bars to clear anchor holes.

5. Channel section C 3x6 at 14" max. bar spacing may be used as an alternate for the C 4x5.4 channel at 15" bar spacing.

6. Channels and bars for grate are ASTM A242/A242M, A572/A572M or A588/A588M, Grade 50 steel, and galvanized in accordance with Specification 975.

7. Use Fence Type B for fence enclosure (Index 550-002). Install all posts in concrete. A minimum of 10 posts required. Use 3" nominal diameter posts for corner and approach side posts.

8. Anchor Bolts are ASTM F1554 Grade 36 fully threaded headless bolts, installed in accordance with Specifications 416 and 937. Nuts are ASTM A563 or A194 and washers are ASTM F436 or Type A plain washers. Galvanize all nuts, bolts and washers.

9. Quantities are for informational and estimating purposes only.

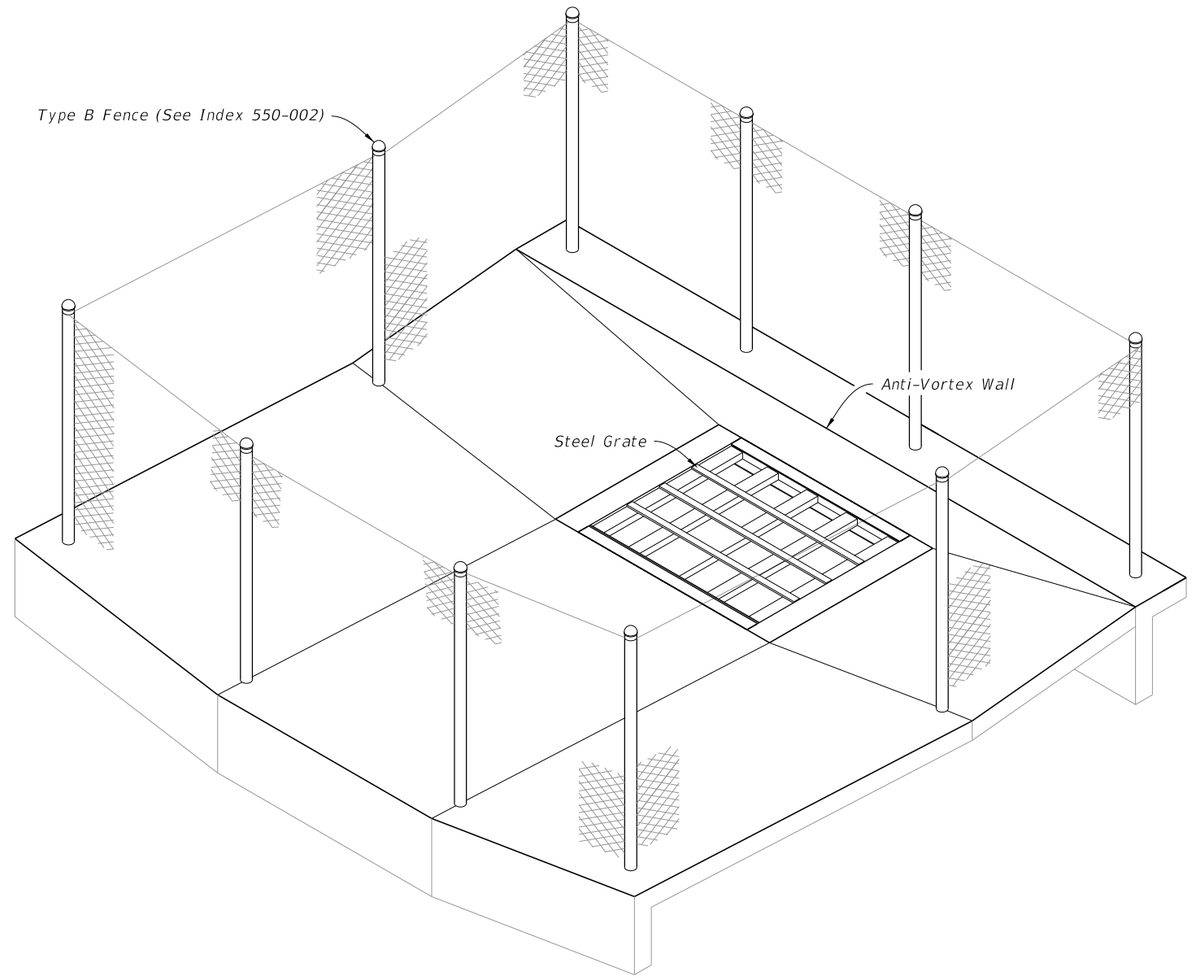

INLET FENCE ENCLOSURE

TABLE OF CONTENTS:

Sheet	Description
1	General Notes and Contents
2	Inlet Lengths (L) Less Than or Equal to 9'
3	Inlet Lengths (L) Greater Than or Equal to 9'
4	Steel Grate Details

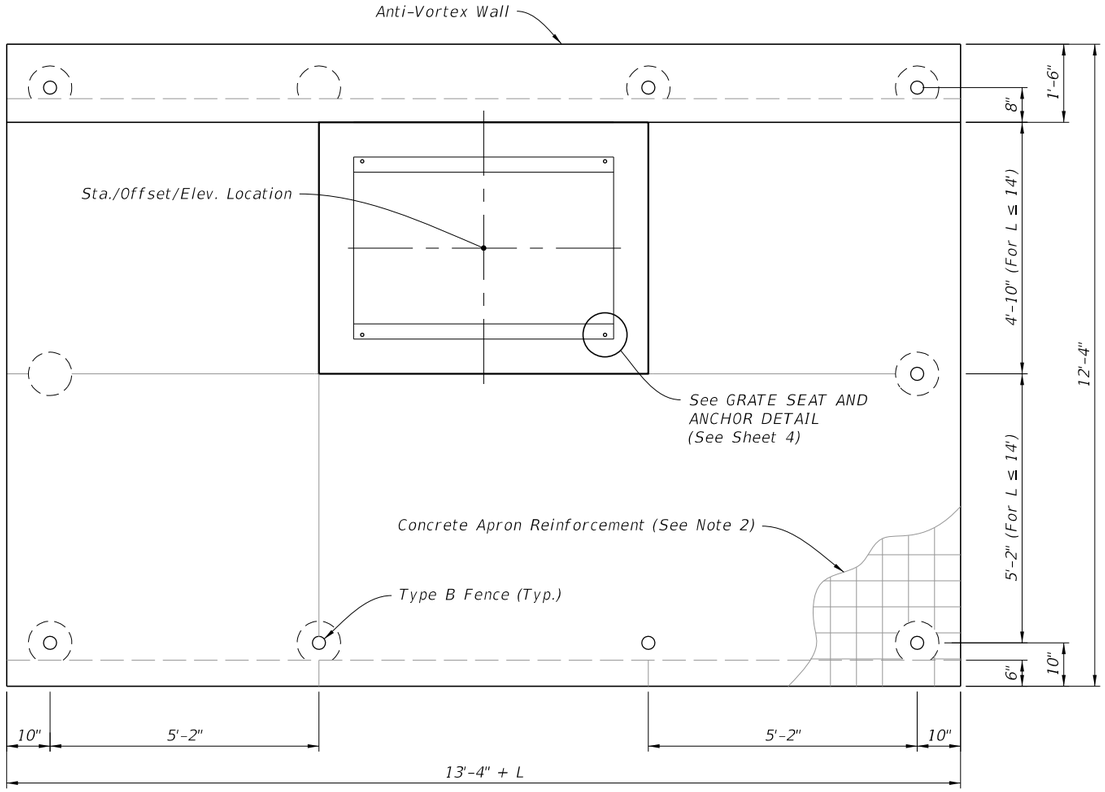

PLAN

TABLE 1 SINGLE LAYER REINFORCING Horizontal Wall Reinforcing Schedules				
WALL DEPTH	SCH.	AREA (in^2/ft)	MAX. SPACING	
			BARS	WWR
SIZE: L = 5'-0"				
0'-5'	A12	0.20	12"	8"
5'-8'	A6	0.20	6"	5"
8'-15'	B5.5	0.24	5½"	5"
SIZE: L = 6'-0"				
0'-4'	A12	0.20	12"	8"
4'-6'	B5.5	0.24	5½"	5"
6'-9'	C6.5	0.37	6½"	6"
9'-15'	C3.5	0.37	3½"	3"
SIZE: L = 7'-0"				
0'-4'	B5.5	0.24	5½"	5"
4'-7'	C6.5	0.37	6½"	6"
7'-15'	D4.5	0.53	4½"	4"
SIZE: L = 8'-0"				
0'-3'	B5.5	0.24	5½"	5"
3'-5'	C6.5	0.37	6½"	6"
5'-9'	D4.5	0.53	4½"	4"
9'-15'	E5	0.73	5"	4"
SIZE: L = 9'-0"				
0'-4'	C6.5	0.37	6½"	6"
4'-7'	D4.5	0.53	4½"	4"
7'-15'	E3	0.73	3"	3"

NOTES:

1. See Plans for Inlet length (L).
2. Use 6"x6" 10/10 welded wire reinforcing.
3. Grate not shown.
4. Pipe opening not shown.

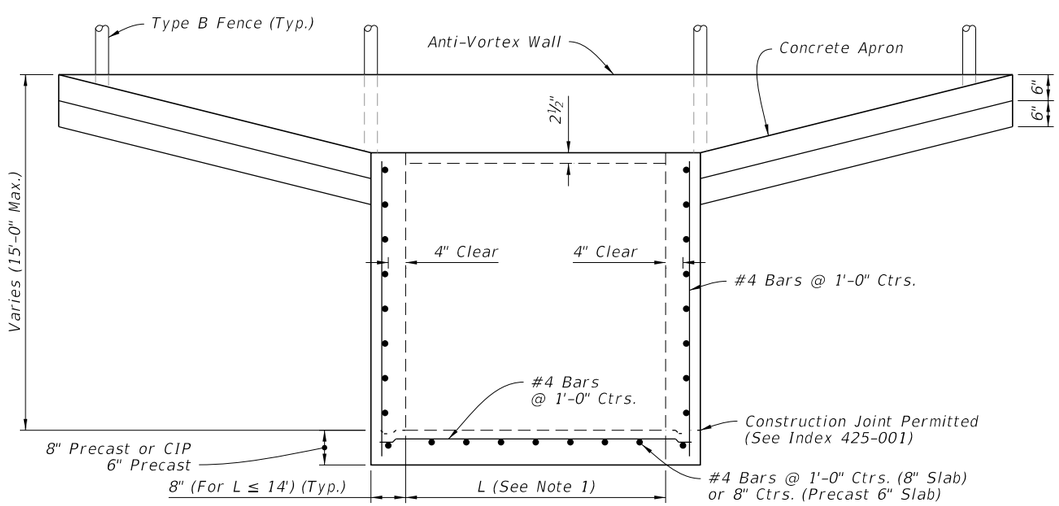

(See Note 4)
FRONT ELEVATION

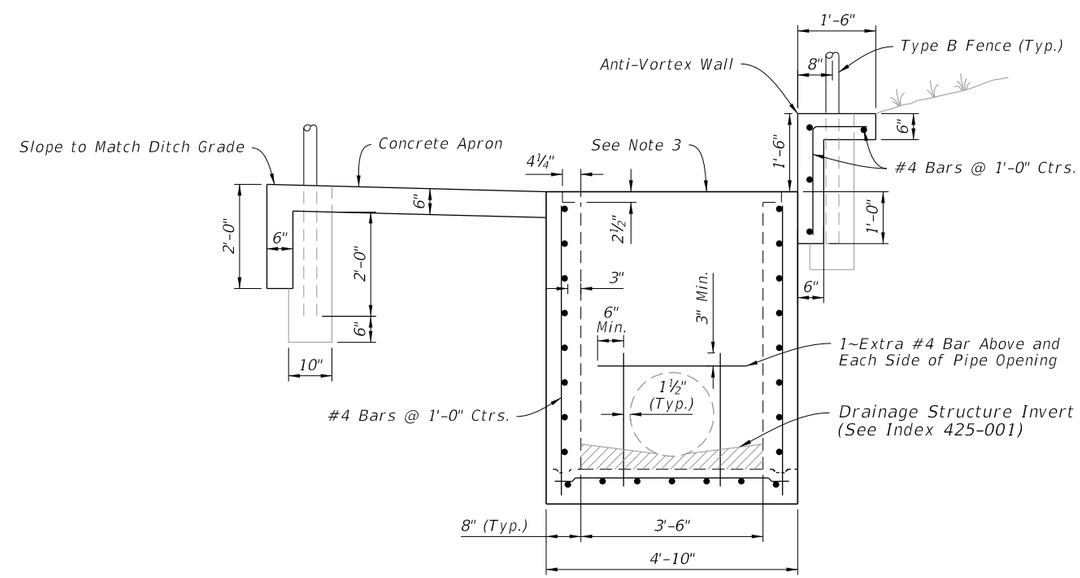

SIDE ELEVATION

INLET LENGTHS (L) LESS THAN OR EQUAL TO 9'

LAST REVISION	REVISION	DESCRIPTION:	FY 2022-23 STANDARD PLANS	DITCH BOTTOM INLET TYPE K	INDEX	SHEET
11/01/20					425-055	2 of 4

9/21/2021 1:46:54 PM

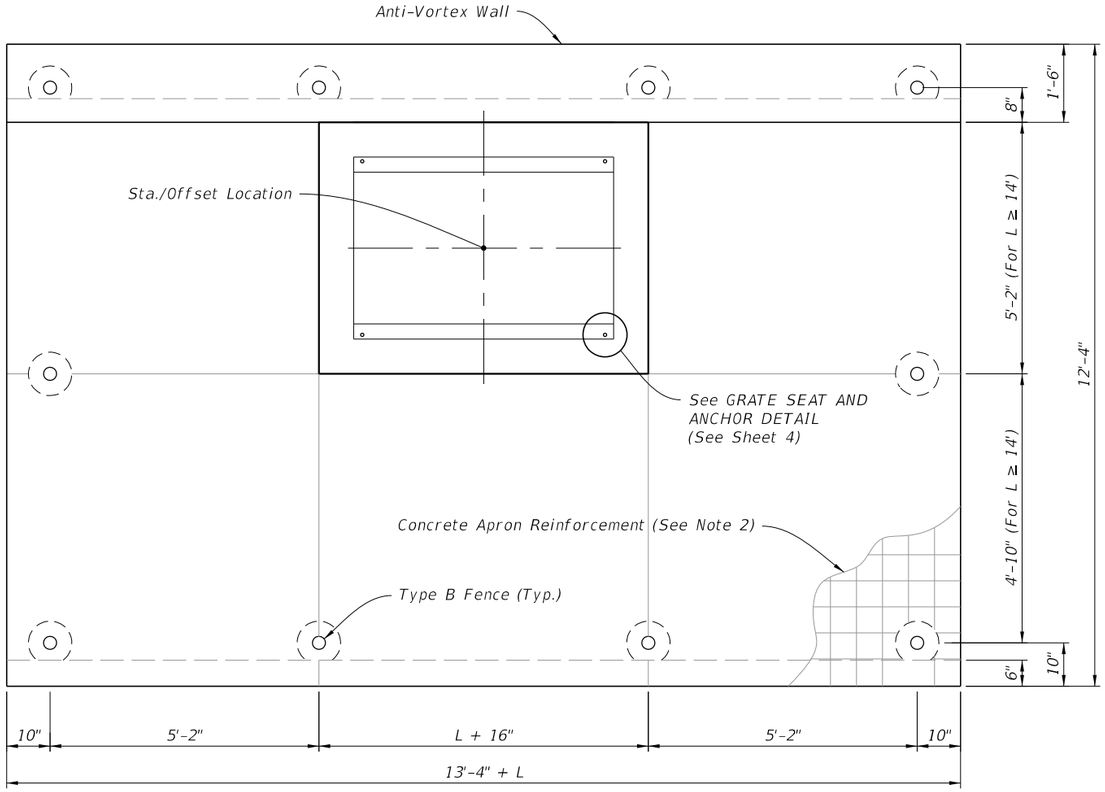

PLAN

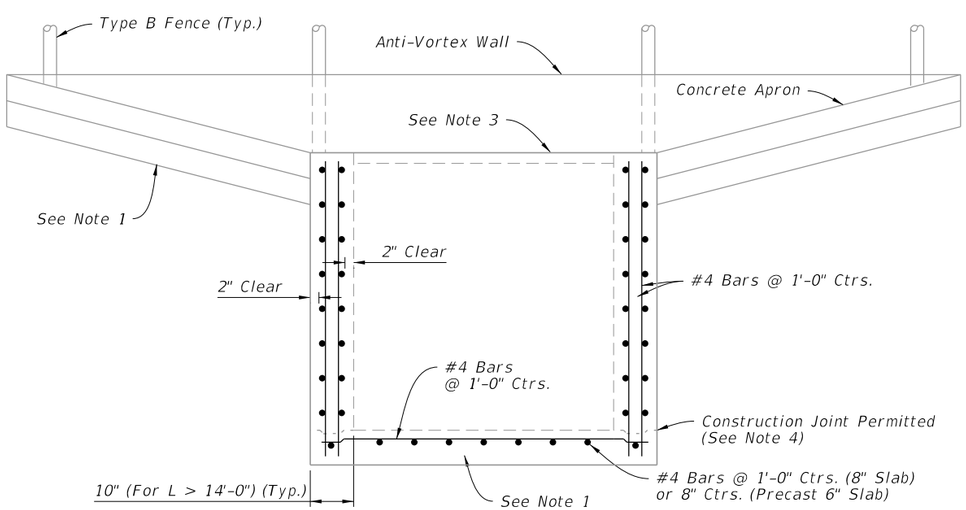

(See Note 5)

FRONT ELEVATION

TABLE 2 DOUBLE LAYER REINFORCING Horizontal Wall Reinforcing Schedules				
WALL DEPTH	SCH.	AREA (in^2/ft)	MAX. SPACING	
			BARS	WWR
SIZE: L = 9'-0"				
0'-4'	A12	0.20	12"	8"
4'-6'	A6	0.20	6"	5"
6'-8'	B5.5	0.24	5½"	5"
8'-15'	C6.5	0.37	6½"	6"
SIZE: L = 10'-0"				
0'-3'	A12	0.20	12"	8"
3'-5'	A6	0.20	6"	5"
5'-8'	C6.5	0.37	6½"	6"
8'-15'	C3.5	0.37	3½"	3"
SIZE: L = 12'-0"				
0'-4'	B5.5	0.24	5½"	5"
4'-6'	C6.5	0.37	6½"	6"
6'-15'	D4.5	0.53	4½"	4"
SIZE: L = 14'-0"				
0'-4'	C6.5	0.37	6½"	6"
4'-7'	D4.5	0.53	4½"	4"
7'-15'	E5	0.73	5"	4"
SIZE: L = 16'-0" x 10" WALL THICK				
0'-4'	C6.5	0.37	6½"	6"
4'-8'	D4.5	0.53	4½	4"
8'-15'	E5	0.73	5"	4"
SIZE: L = 18'-0" x 10" WALL THICK				
0'-3'	C6.5	0.37	6½"	6"
3'-5'	D4.5	0.53	4½"	4"
5'-8'	E5	0.73	5"	4"
8'-15'	F5	1.06	5"	4"

NOTE:

1. See Sheet 2 for dimension details.
2. Use 6"x6" 10/10 welded wire reinforcing.
3. Grate not shown.
4. See Index 425-001 for construction joint details.
5. Pipe Opening not shown.

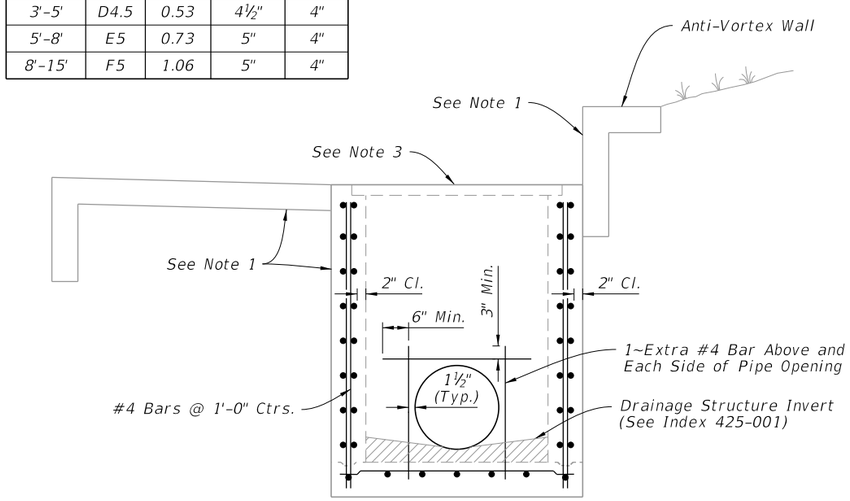

SIDE ELEVATION

INLET LENGTHS (L) GREATER THAN OR EQUAL TO 9'

9/21/2021 1:46:55 PM

LAST REVISION	REVISION	DESCRIPTION:	FY 2022-23 STANDARD PLANS	DITCH BOTTOM INLET TYPE K	INDEX	SHEET
11/01/20					425-055	3 of 4

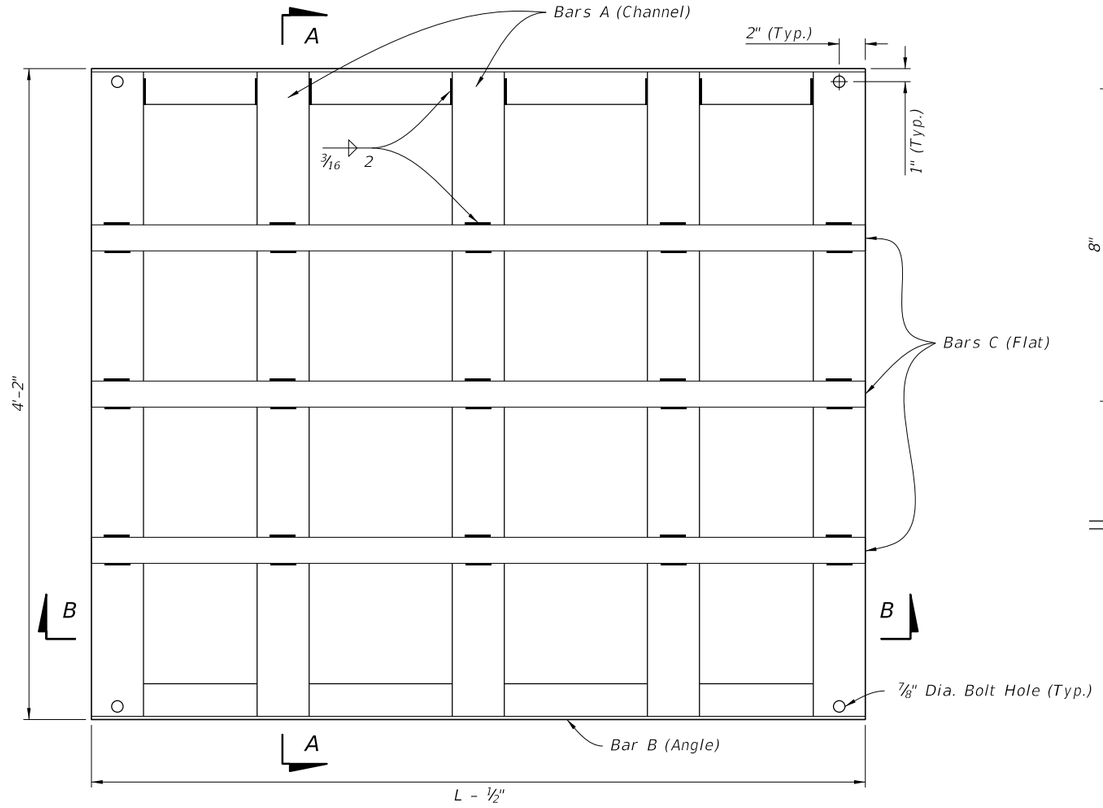

PLAN

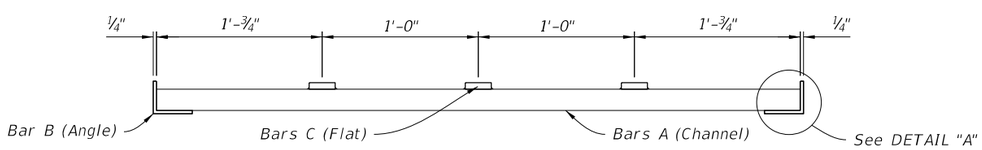

SECTION A-A

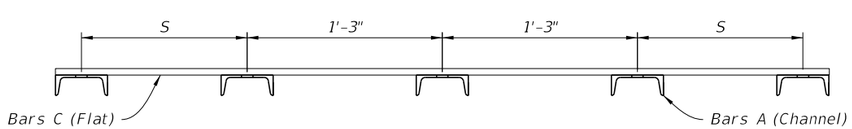

SECTION B-B

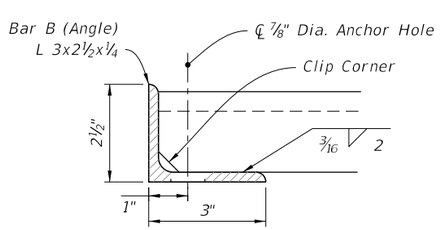

DETAIL "A"

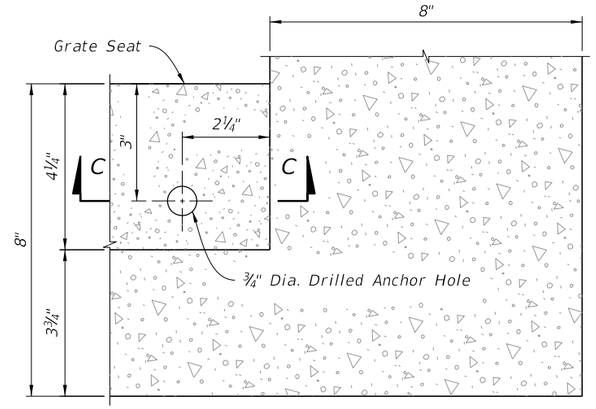

PLAN

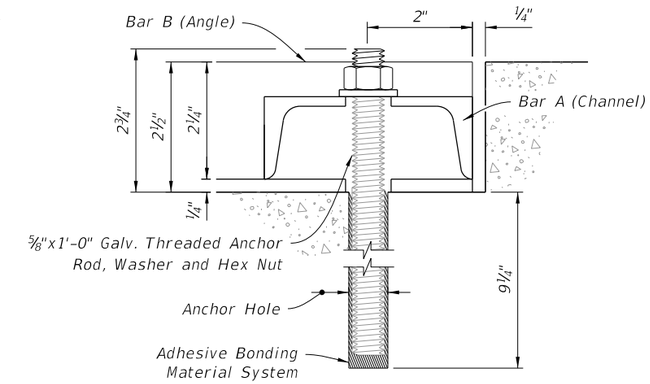

SECTION C-C

GRATE SEAT AND ANCHOR DETAILS

TABLE 3
GRATE QUANTITIES

PIPE SIZE	L See Note 1	S	BILL OF STEEL			STEEL WEIGHT		
			BAR	No. REQD.	LENGTH	CHANNEL 4"x 5.4 lb	ANGLE 3"x 2 1/2"x 1/4" (4.5 lb/ft)	FLAT 2" x 1/2" (3.4 lb/ft)
30"&36"	5'-0"	12 3/4"	A	5	4'-1 1/2"	111	45	51
			B	2	4'-11 1/2"			
			C	3	4'-11 1/2"			
42"&48"	6'-0"	11 1/4"	A	6	4'-1 1/2"	134	54	61
			B	2	5'-11 1/2"			
			C	3	5'-11 1/2"			
54"&60"	7'-0"	9 3/4"	A	7	4'-1 1/2"	156	63	71
			B	2	6'-11 1/2"			
			C	3	6'-11 1/2"			
66"&72"	8'-0"	8 1/4"	A	8	4'-1 1/2"	178	72	81
			B	2	7'-11 1/2"			
			C	3	7'-11 1/2"			
84"	9'-0"	14 1/4"	A	8	4'-1 1/2"	178	81	91
			B	2	8'-11 1/2"			
			C	3	8'-11 1/2"			
SPECIAL	10'-0"	12 3/4"	A	9	4'-1 1/2"	201	90	102
			B	2	9'-11 1/2"			
			C	3	9'-11 1/2"			
SPECIAL	12'-0"	9 3/4"	A	11	4'-1 1/2"	245	108	122
			B	2	11'-11 1/2"			
			C	3	11'-11 1/2"			
SPECIAL	14'-0"	14 1/4"	A	12	4'-1 1/2"	267	126	142
			B	2	13'-11 1/2"			
			C	3	13'-11 1/2"			
SPECIAL	16'-0"	11 1/4"	A	14	4'-1 1/2"	312	144	163
			B	2	15'-11 1/2"			
			C	3	15'-11 1/2"			
SPECIAL	18'-0"	8 1/4"	A	16	4'-1 1/2"	356	162	183
			B	2	17'-11 1/2"			
			C	3	17'-11 1/2"			

NOTES:

1. See Sheet 2 for dimension "L" location.
2. See Section B-B for dimension "S" location.

STEEL GRATE DETAILS

GENERAL NOTES:

1. Work this Index with Index 425-052.

2. Quantities are for informational and estimating purposes only.

TABLE OF CONTENTS:

Sheet	Description
1	General Notes and Contents
2	Inlet Type C (Modified)
3	Special Concrete Endwall
4	Shallow Ditches and Yard Drains

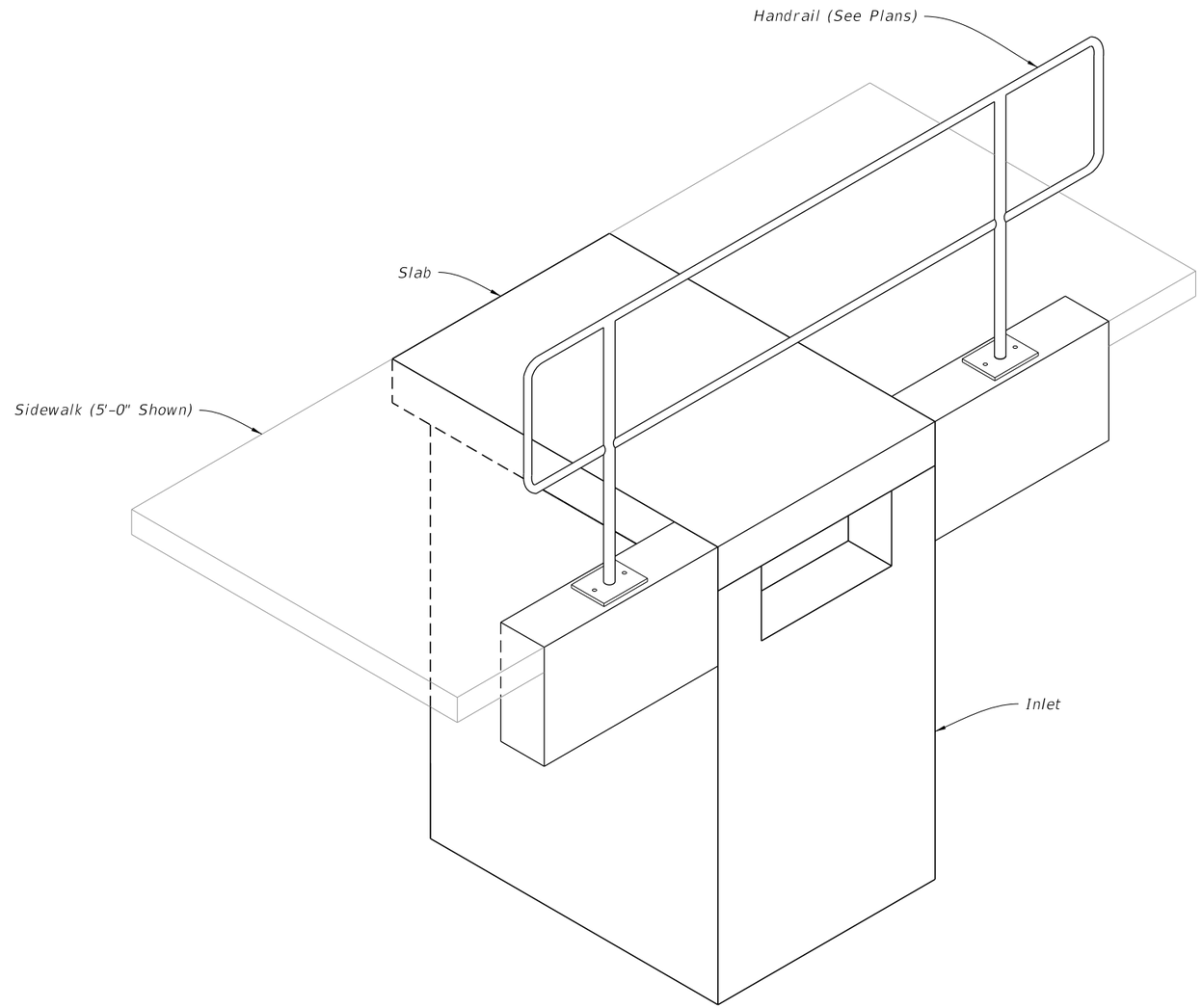

TYPE C (MODIFIED) INLET

(Pipe Connection Not Shown)

9/21/2021 1:47:08 PM

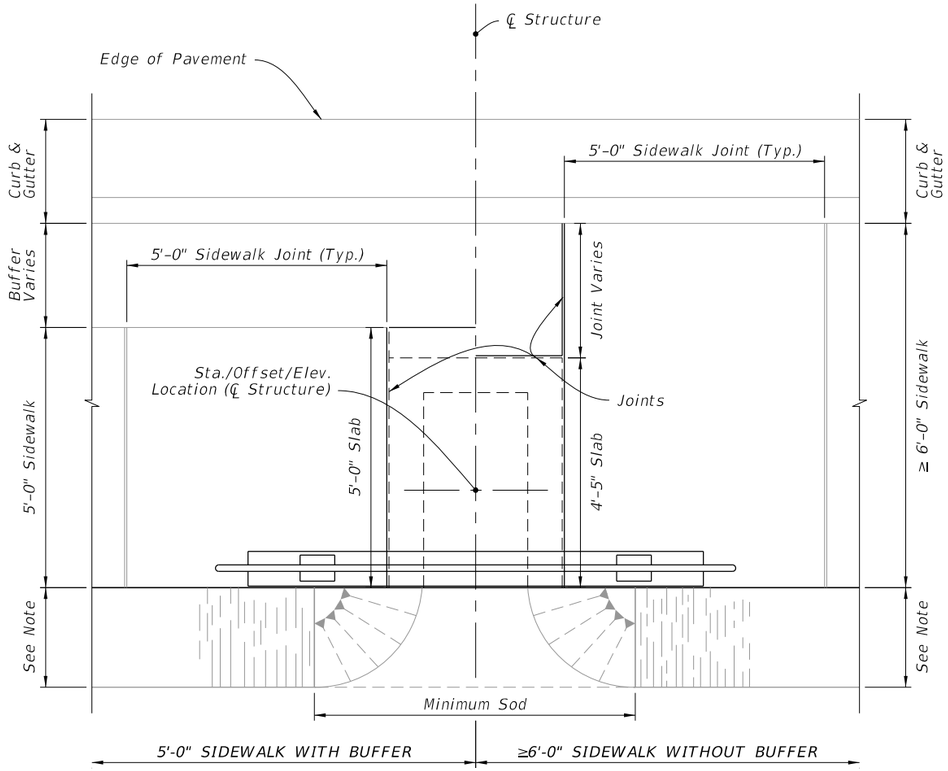

PLAN

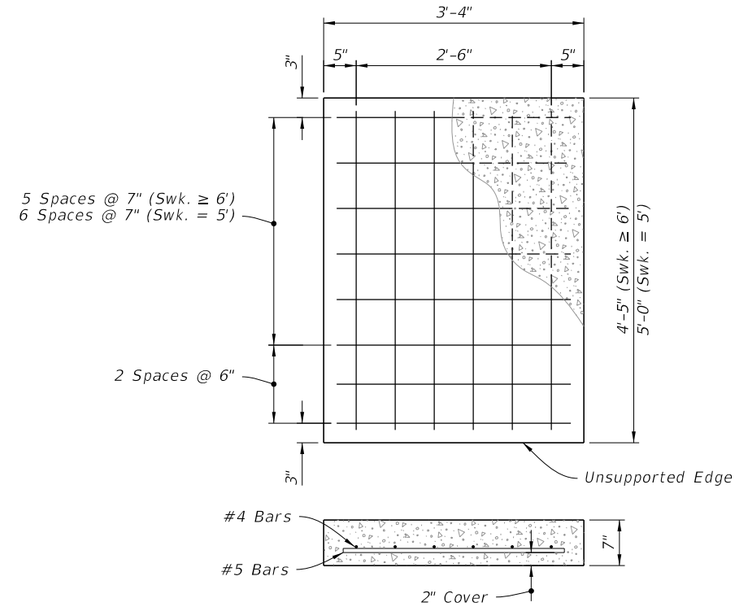

SLAB REINFORCEMENT

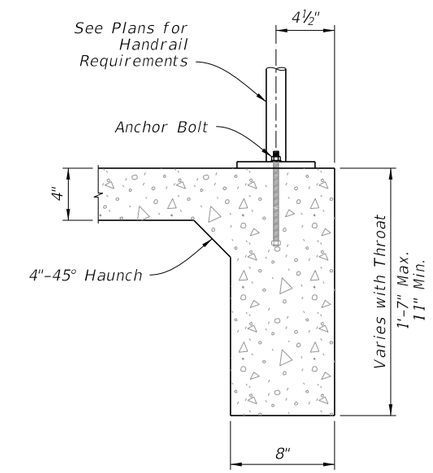

SECTION B-B

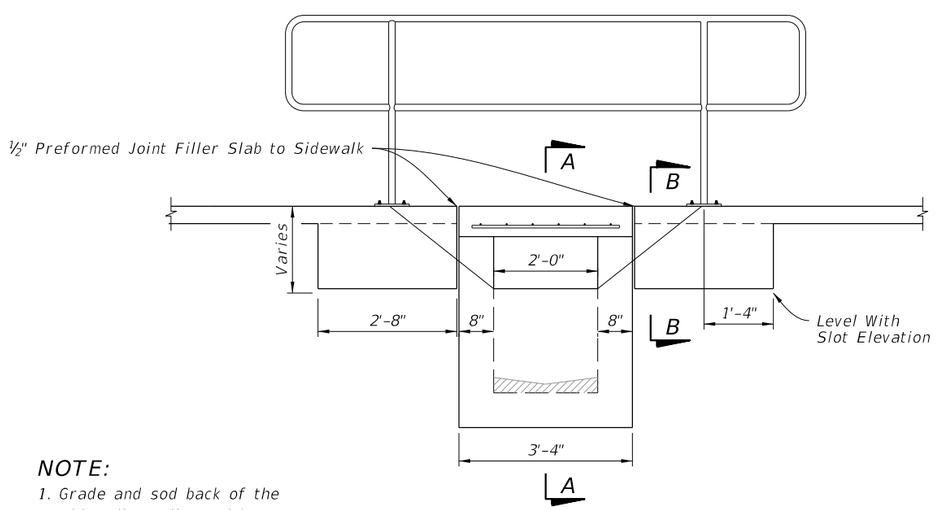

ELEVATION

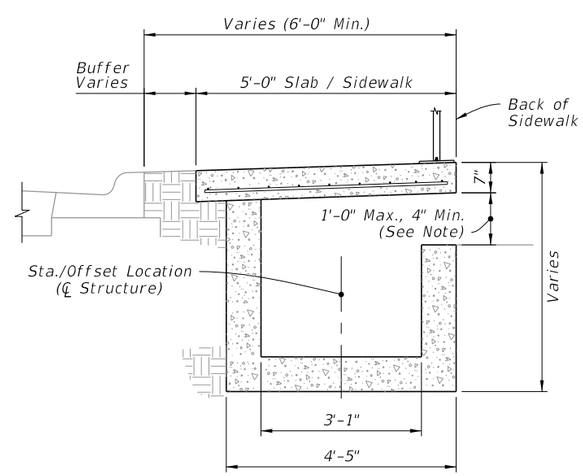

5'-0" SIDEWALK WITH BUFFER

SECTION A-A

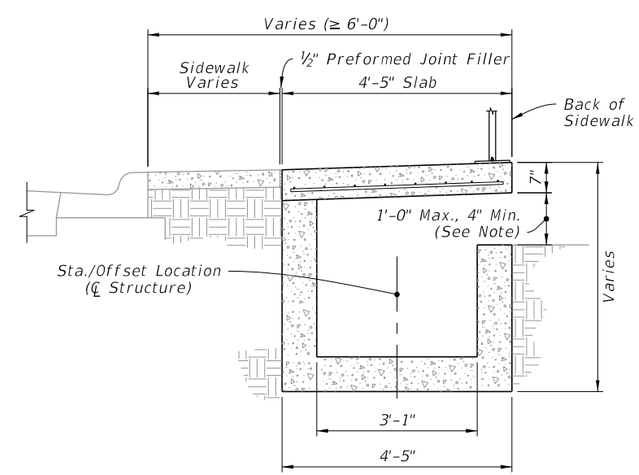

≥6'-0" SIDEWALK WITHOUT BUFFER

SECTION A-A

NOTE:

1. Grade and sod back of the sidewalk as directed by the Engineer.
2. Pipe connection not shown.

TYPE C INLET (MODIFIED)

9/21/2021 1:47:09 PM

LAST REVISION	REVISION	DESCRIPTION:			INDEX	SHEET
11/01/20			FDOT FY 2022-23 STANDARD PLANS	BACK OF SIDEWALK DRAINAGE	425-060	2 of 4

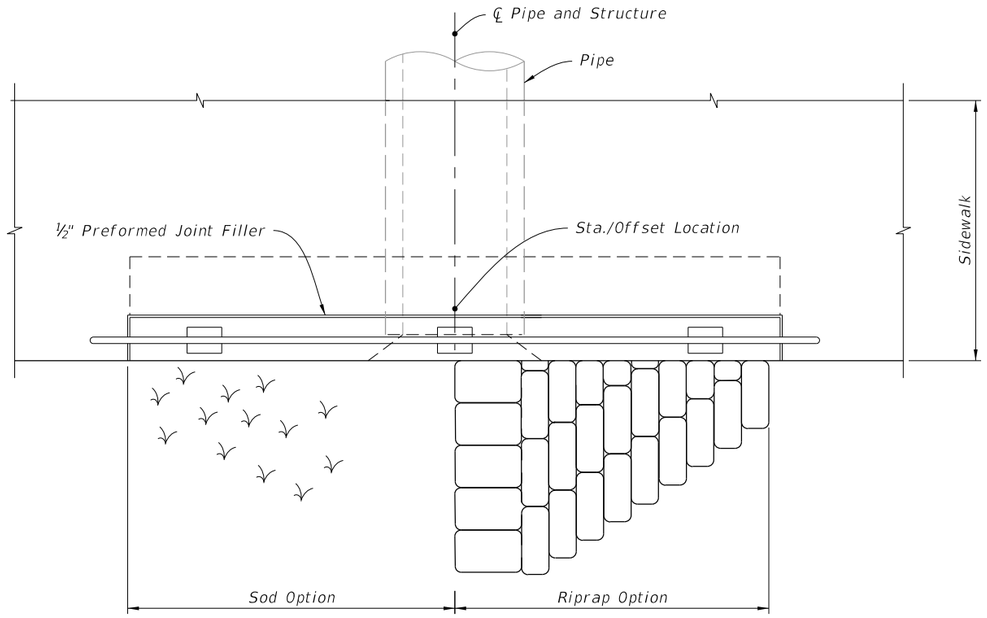

PLAN

NOTES:

1. Grading back of sidewalk as directed in the Plans.
2. Concrete quantities shown are for maximum wall heights and for information only.
3. Riprap quantities are for informational and estimating purposes only.

TABLE - 1			
Pipe Size Dia. (in)	C	Concrete Class II (CY)	Sand-Cement Riprap (CY)
15	4'-9"	2.3	1.1
18	5'-3"	2.6	1.3
24	6'-3"	3.3	1.8

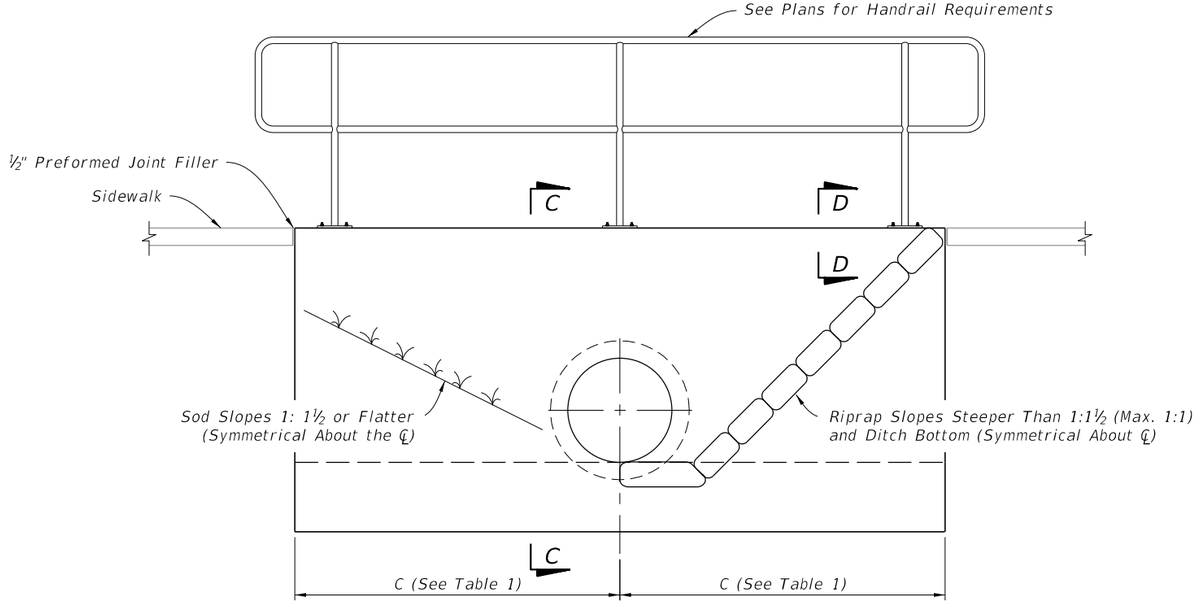

ELEVATION

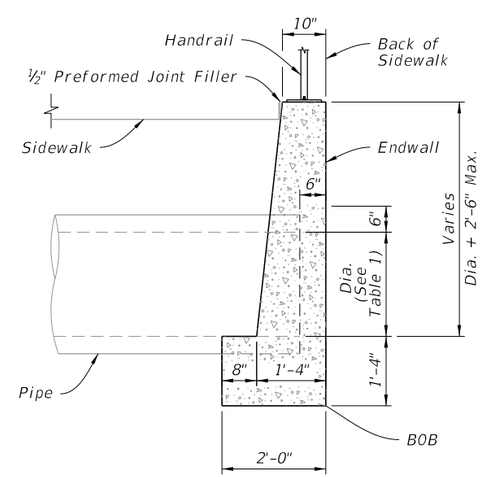

SECTION C-C

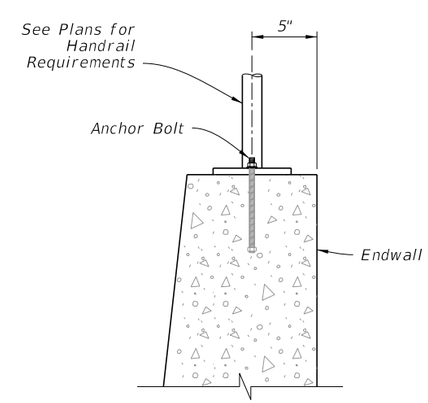

SECTION D-D

SPECIAL CONCRETE ENDWALL

NOTES:

1. Construct at locations as directed by the Engineer.

2. Use either cast iron pipe or PVC rigid conduit, U.L. listed for direct sunlight exposure, Schedule 40.

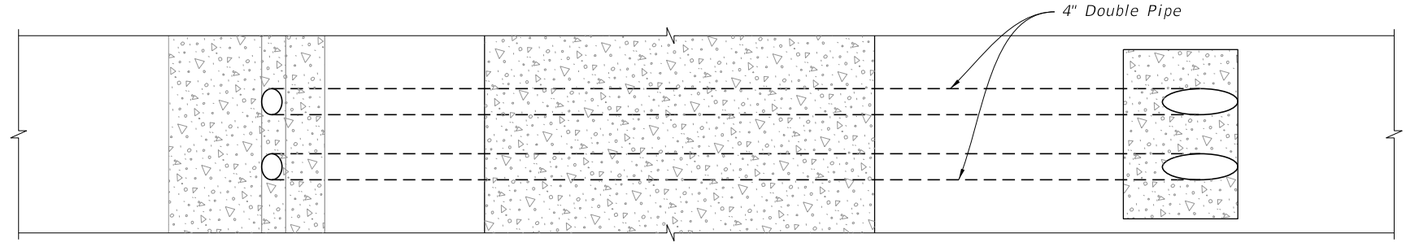

PLAN

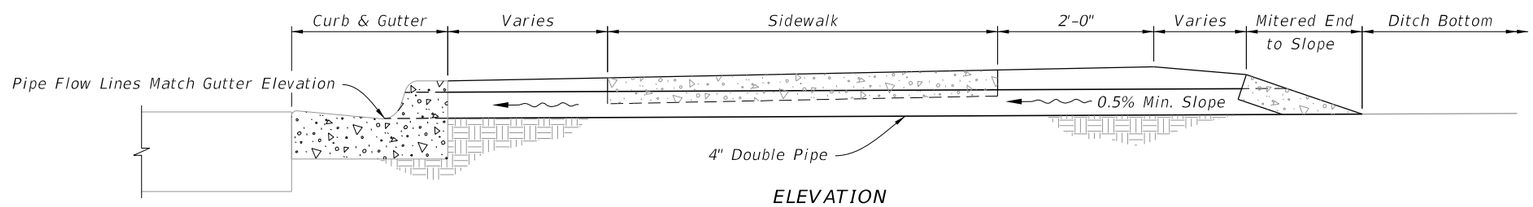

ELEVATION

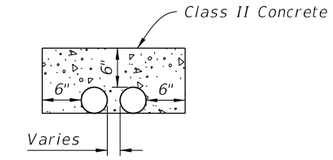

INLET VIEW

SHALLOW DITCHES

NOTES:

1. Tee will be either concrete or PVC, 15"x15"x12".

2. Grate will have diameter of 14¼", 2½" thick, minimum 45 square inches flow area, and be light duty cast iron in accordance Specification 962.

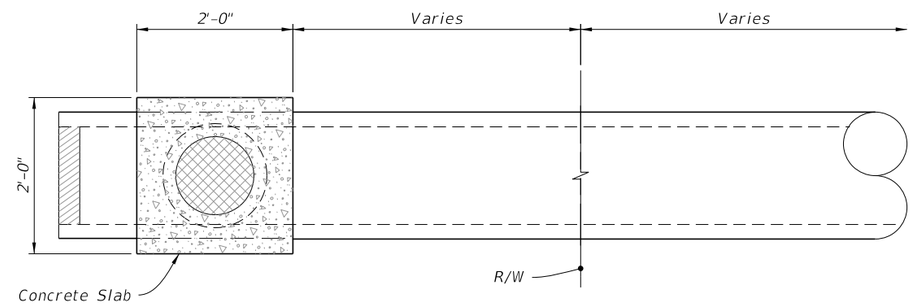

PLAN

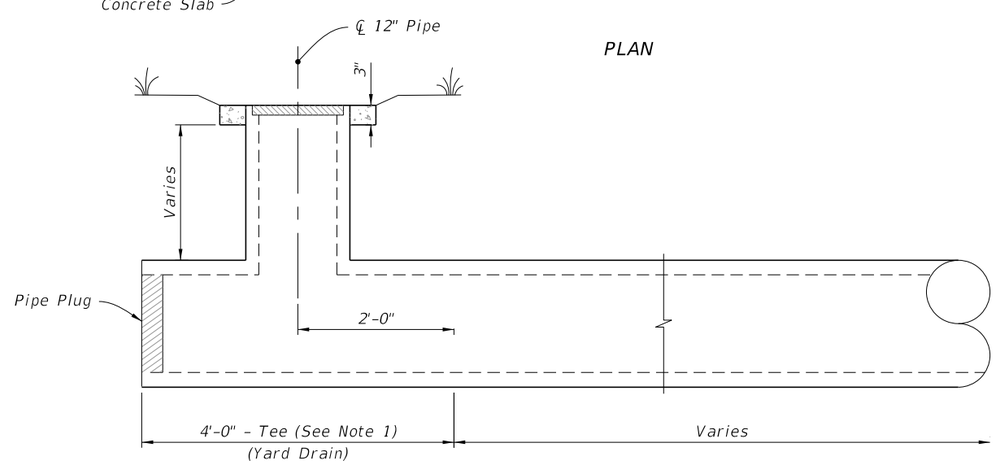

ELEVATION

YARD DRAINS

SHALLOW DITCHES AND YARD DRAINS

LAST REVISION	REVISION	DESCRIPTION:			INDEX	SHEET
11/01/21			FY 2022-23 STANDARD PLANS	BACK OF SIDEWALK DRAINAGE	425-060	4 of 4

9/21/2021 1:47:10 PM

GENERAL NOTES:

1. The finished grade and slope of the inlet top are to conform with the finished cross slope and grade of the proposed sidewalk and/or border.

2. When inlets are to be constructed on a curve, refer to the plans to determine the radius. Bend steel when necessary.

3. Inlets can be either cast-in-place or precast concrete. Chamfer all exposed edges ¾".

4. All reinforcement is ASTM A615/A615M Grade 60 steel, either smooth or deformed with a 2" minimum cover, unless otherwise shown. Equivalent area grade 40 steel or 65 ksi welded wire fabric may be substituted.

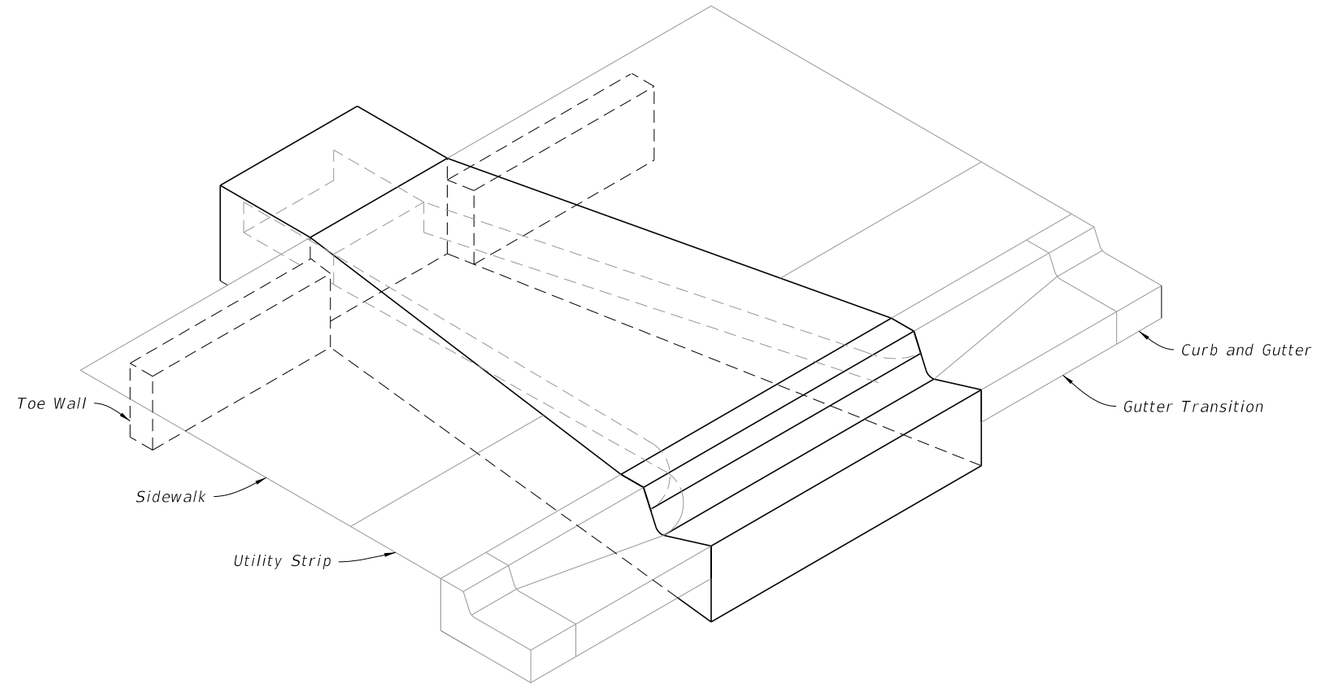

TYPE I CLOSED FLUME INLET WITH SIDEWALK

Single Barrel Flume Shown

TABLE OF CONTENTS:

Sheet	Description
1	General Notes and Contents
2	Type-I Dimensional Details
3	Reinforcice Details
4	Type-II Dimensional Details
5	Multiple Barrel Flumes

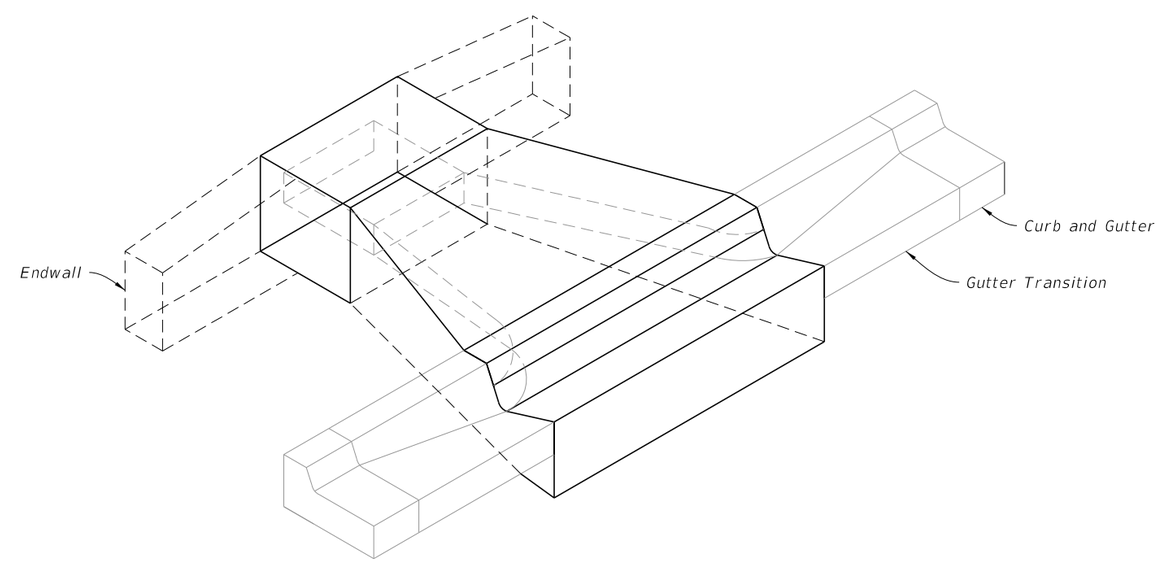

TYPE II CLOSED FLUME INLET WITHOUT SIDEWALK

Single Barrel Flume Shown

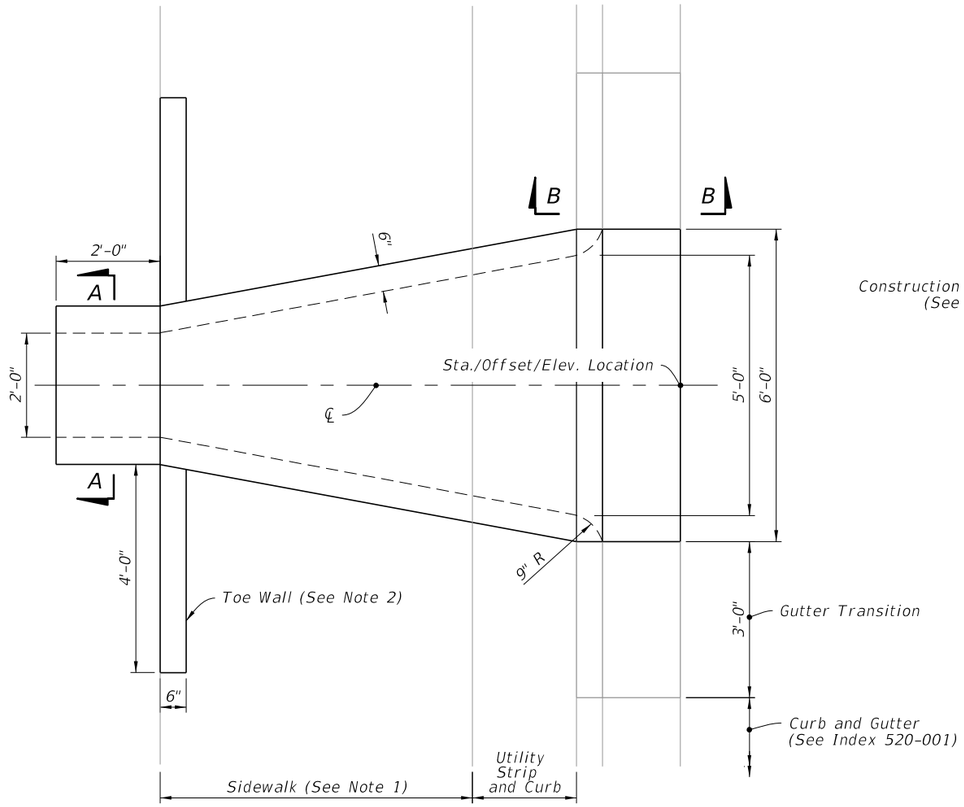

PLAN

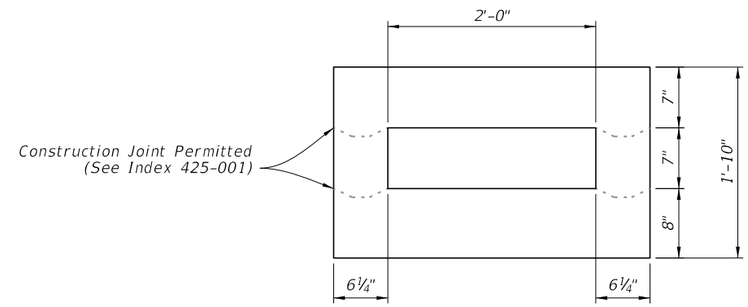

SECTION A-A

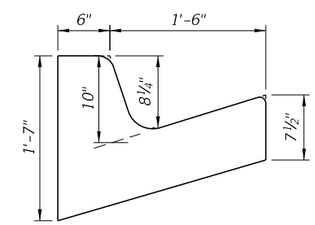

SECTION B-B

NOTES:

1. Use sloped section with sidewalk applications only.
2. Use Toe Walls with Sidewalk application only. For Endwall without Sidewalk see DETAILS on Sheet 4.
3. Slope to match adjacent curb with 2" top radius and 1¼" bottom radius.
4. See Sheet 5 for multiple barrel flumes span variation.

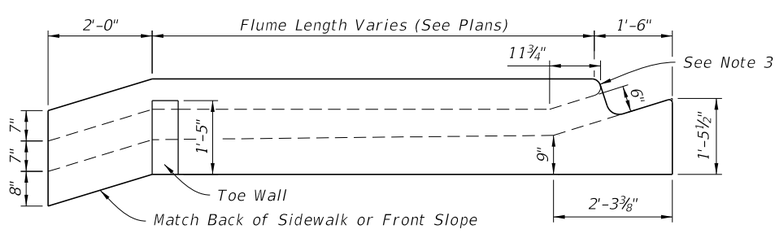

SIDE ELEVATION

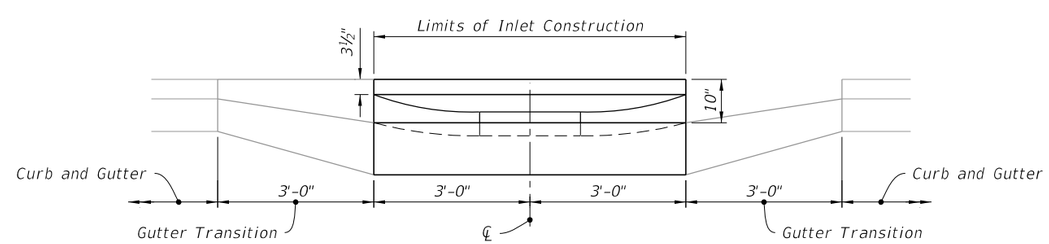

FRONT ELEVATION

TYPE-I DIMENSIONAL DETAILS

LAST REVISION	REVISION	DESCRIPTION:			INDEX	SHEET
11/01/21			FY 2022-23 STANDARD PLANS	CLOSED FLUME INLET	425-061	2 of 5

9/21/2021 1:47:11 PM

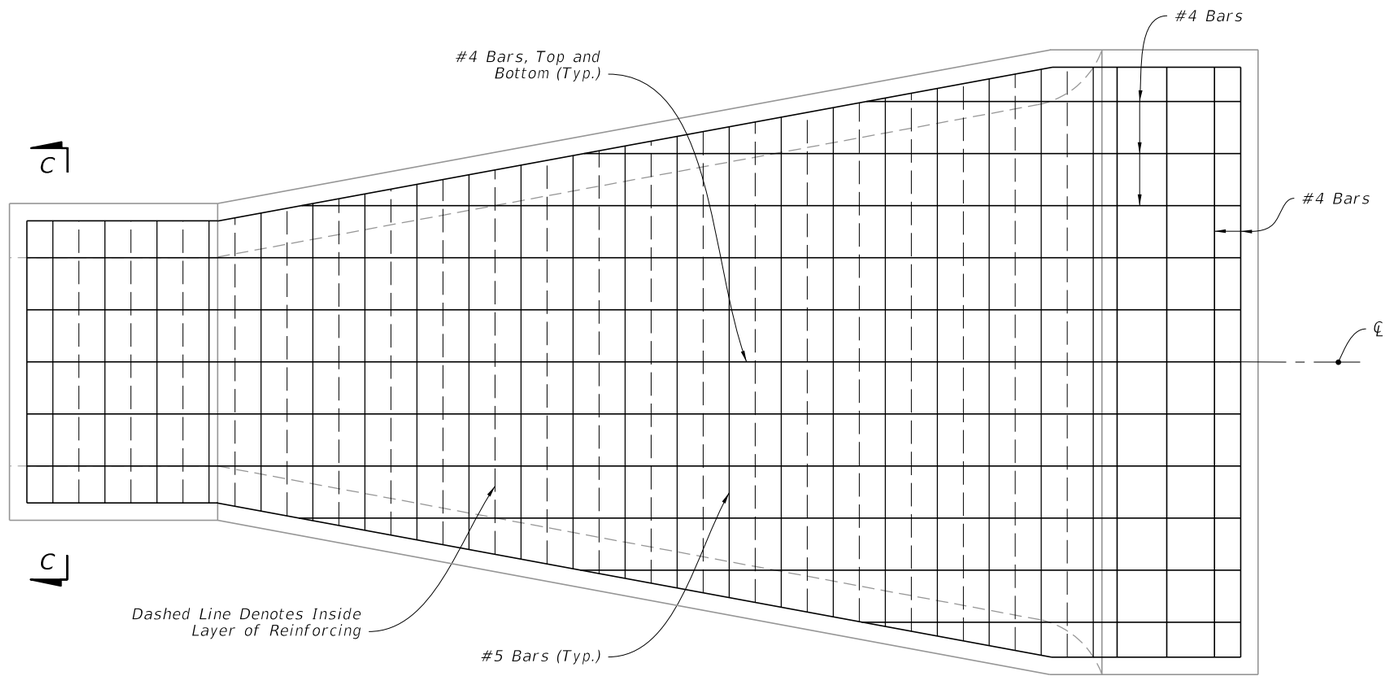

PLAN

NOTE:
Type I Closed Flume Inlet shown, Type II Closed Flume Inlet Similar.

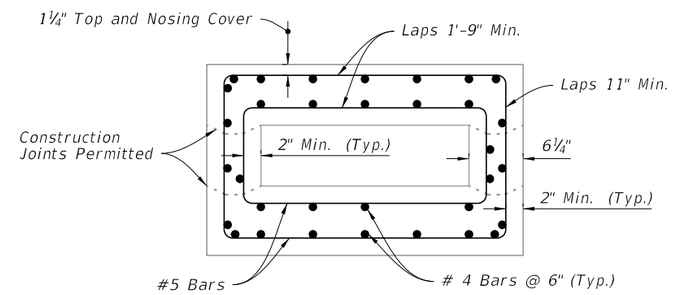

SECTION C-C

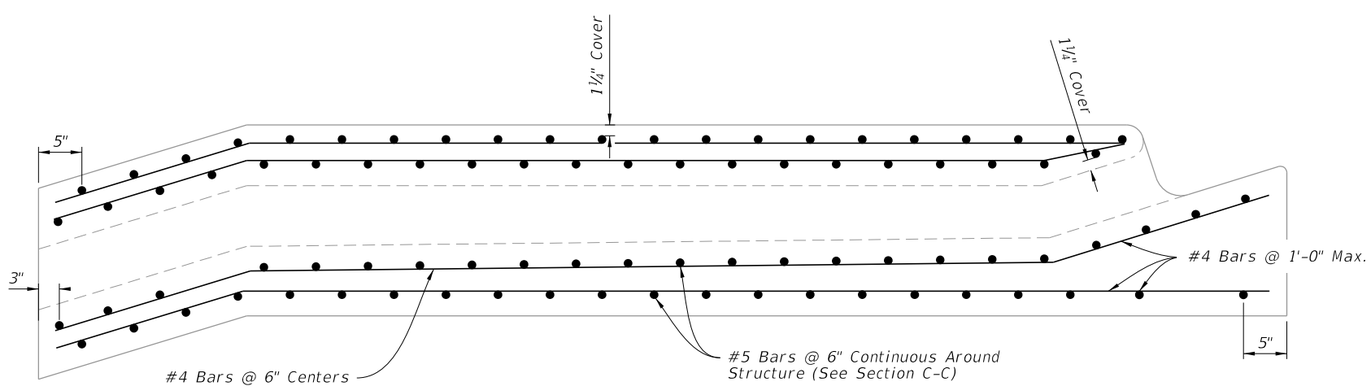

SIDE ELEVATION

REINFORCING DETAILS

LAST REVISION	REVISION	DESCRIPTION:			INDEX	SHEET
11/01/20			FDOT FY 2022-23 STANDARD PLANS	CLOSED FLUME INLET	425-061	3 of 5

9/21/2021 1:47:12 PM

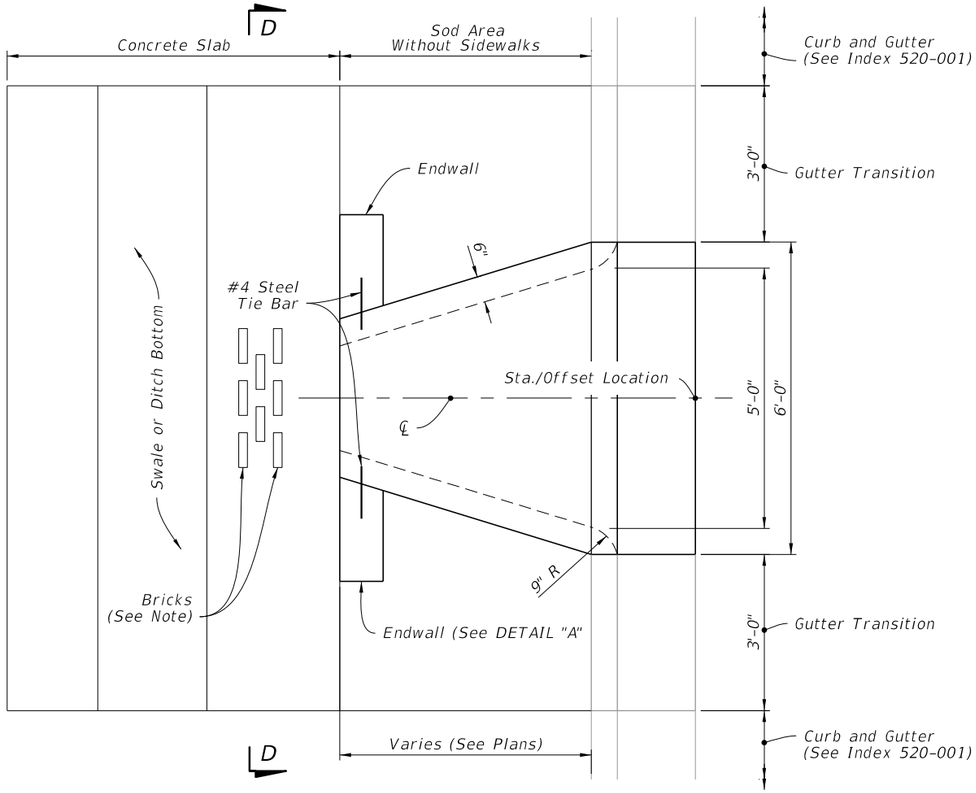

PLAN

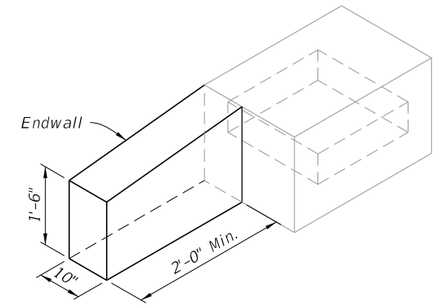

DETAIL "A"

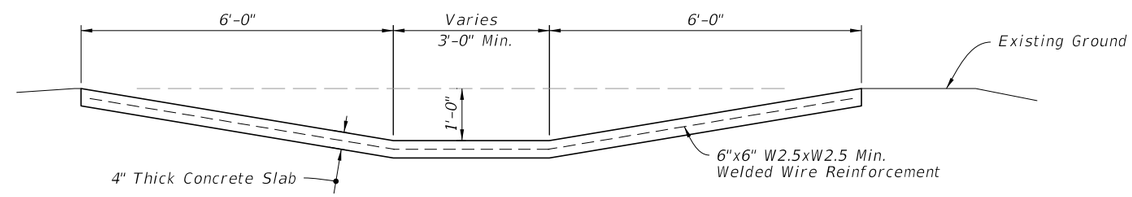

SECTION D-D

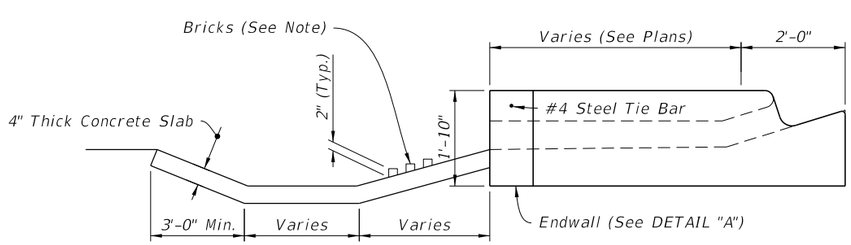

SIDE ELEVATION

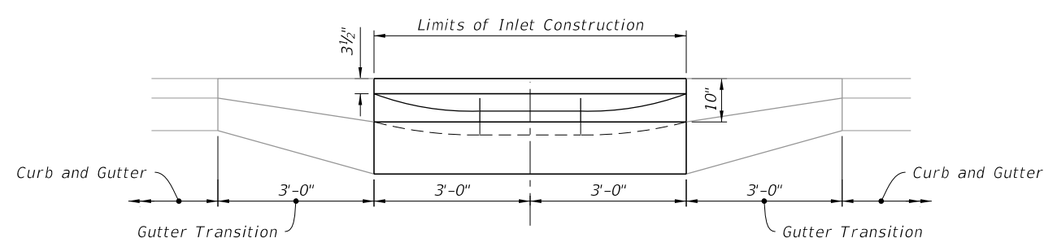

FRONT ELEVATION

NOTE:
When called for in the Plans, install bricks to dissipate energy.

TYPE II DIMENSIONAL DETAILS

LAST REVISION	REVISION	DESCRIPTION:			INDEX	SHEET
11/01/20			FY 2022-23 STANDARD PLANS	CLOSED FLUME INLET	425-061	4 of 5

9/21/2021 1:47:13 PM

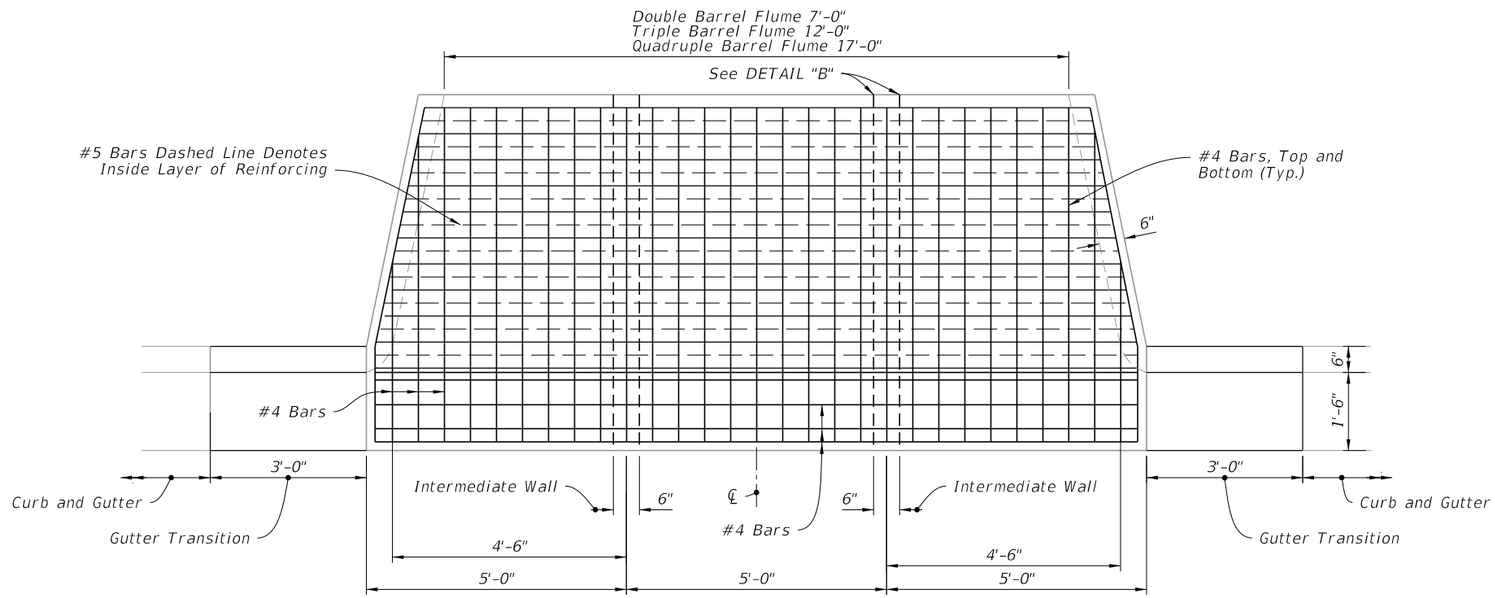

PLAN

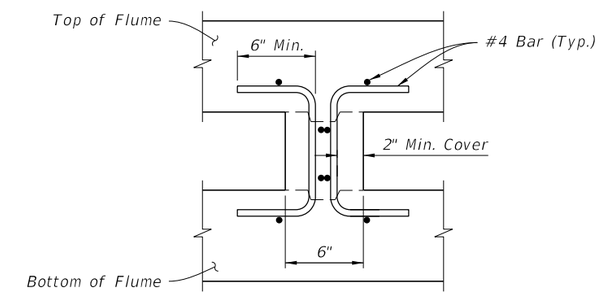

Intermediate Wall Reinforcing
DETAIL "B"

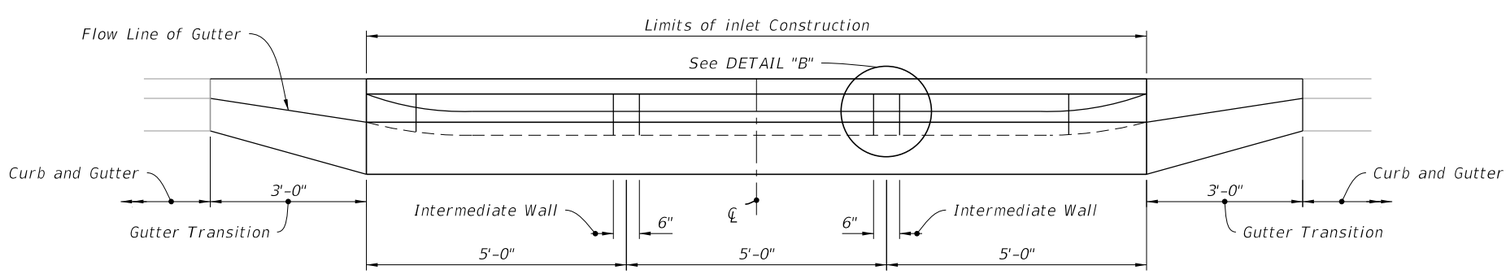

FRONT ELEVATION

NOTE:
Triple barrel flume shown, double and quadruple similar.

9/21/2021 1:47:13 PM

MULTIPLE BARREL FLUMES

LAST REVISION	REVISION	DESCRIPTION:			INDEX	SHEET
11/01/20			FDOT FY 2022-23 STANDARD PLANS	CLOSED FLUME INLET	425-061	5 of 5

GENERAL NOTES:

1. The side panels are dimensionally symmetric, and may be used on either side of the structure.

2. Two (2) skimmers may be installed on a single structure provided they are constructed on opposite ends.

3. The width of the front panel (dimension W) is equal to the same as the outside dimension across the front of the structure.

4. Hot dip galvanize the front panel, side panels, and flat bars after fabrication.

5. The location of the reinforcing steel in these structures must conform to the Index 425-052 to avoid conflict with the expansion anchors used to attach the skimmer.

6. Use grates on the inlets unless otherwise specified in the Plans.

7. A skimmer consists of two (2) side panels, one front panel, two (2) flat bars, and accessory hardware.

TABLE OF CONTENTS:

Sheet	Description
1	General Notes and Contents
2	Panel and Flat Bar Details
3	Installation Details

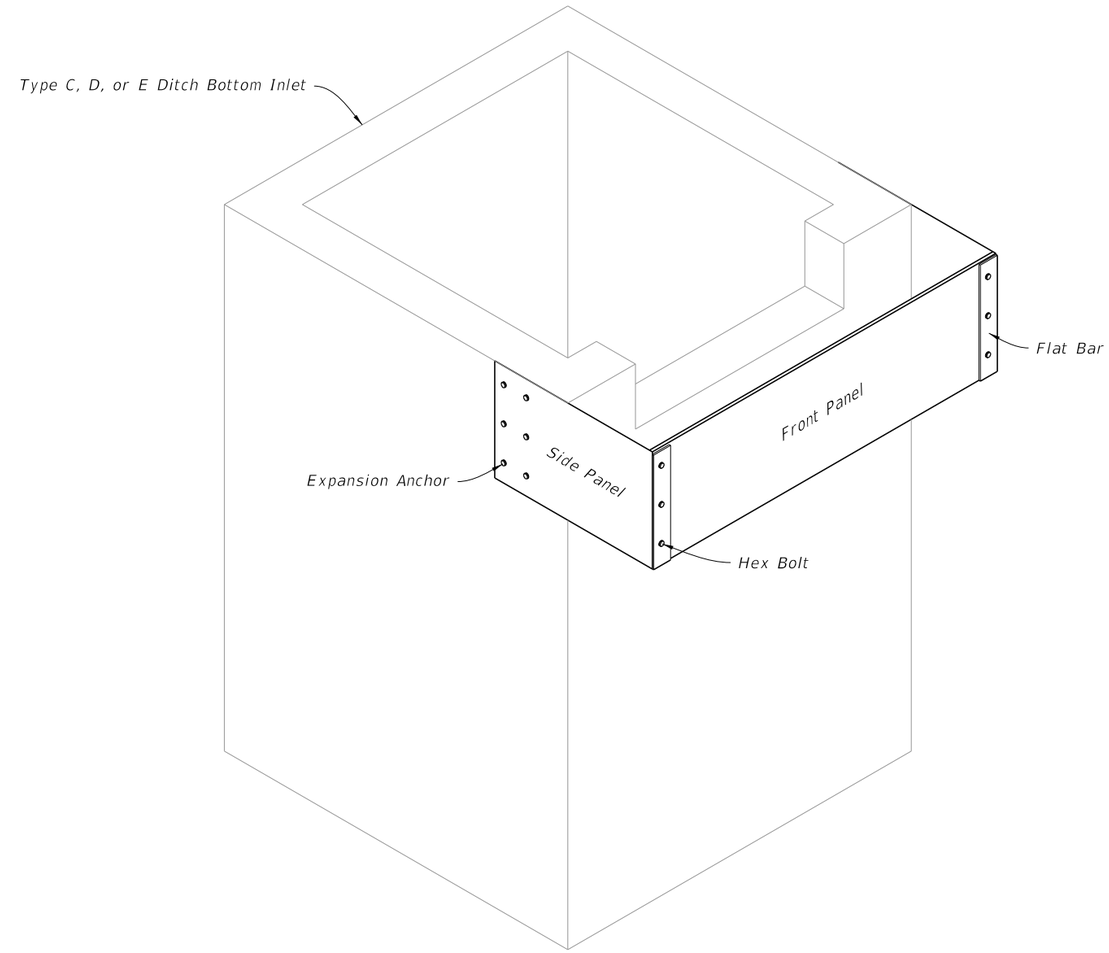

SKIMMER

9/21/2021 1:47:14 PM

LAST REVISION	REVISION	DESCRIPTION:			INDEX	SHEET
11/01/20			FDOT FY 2022-23 STANDARD PLANS	SKIMMER FOR OUTLET CONTROL STRUCTURES	425-070	1 of 3

DIMENSIONS				
Skimmer Height as Specified in the Plans				Bolt Spacing
H (in.)	D (in.)	E (in.)	L (in.)	S (in.)
12	3 3/16	3	28	3
14	3 3/16	3	28	4
16	3 3/16	3	28	5
18	3 3/16	3	28	6
20	4 3/16	4	31	6
22	4 3/16	4	31	7
24	4 3/16	4	31	8
26	4 3/16	4	31	9
28	4 3/16	4	31	10
30	5 3/16	5	31	10
32	5 3/16	5	31	11
34	5 3/16	5	31	12
36	6 3/16	6	31	12
38	6 3/16	6	31	13
40	6 3/16	6	31	14

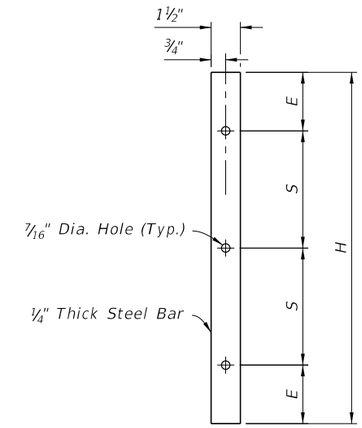

FLAT BAR

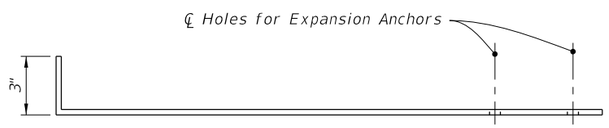

TOP VIEW

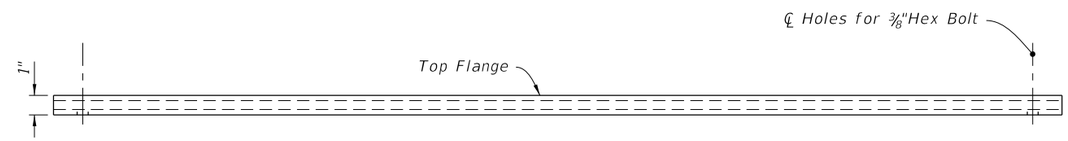

TOP VIEW

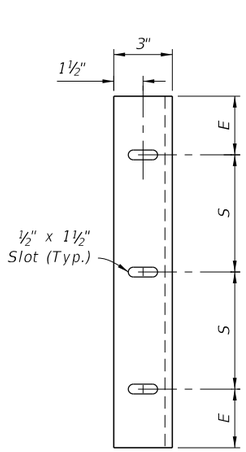

FRONT VIEW

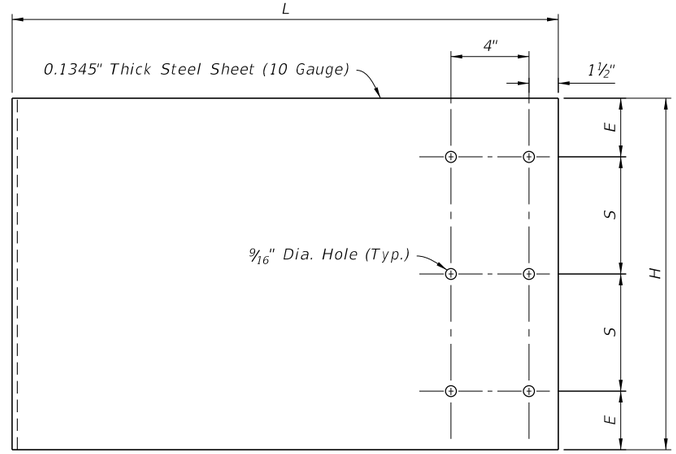

SIDE VIEW

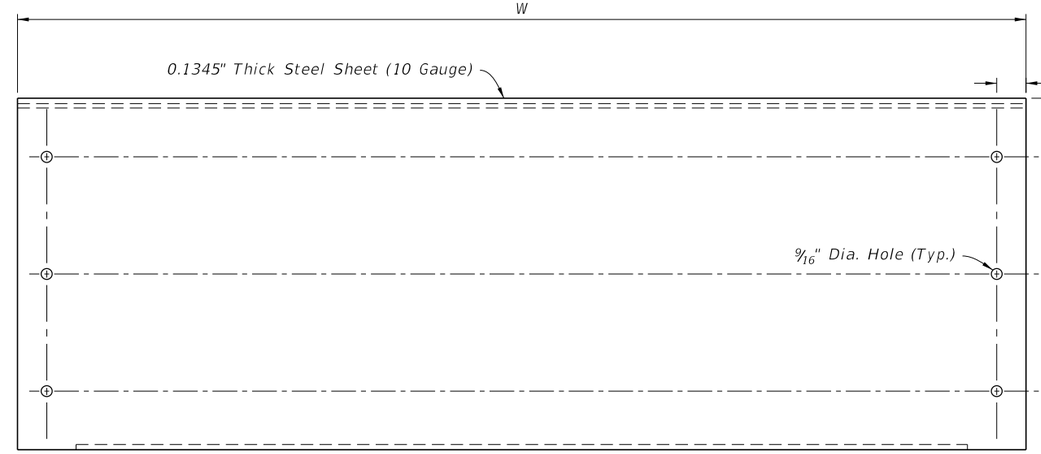

FRONT VIEW

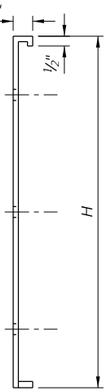

SIDE VIEW

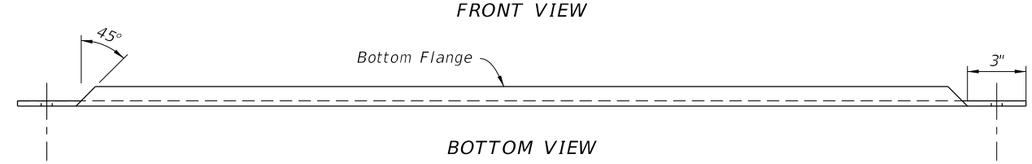

BOTTOM VIEW

SIDE PANEL

FRONT PANEL

PANEL AND FLAT BAR DETAILS

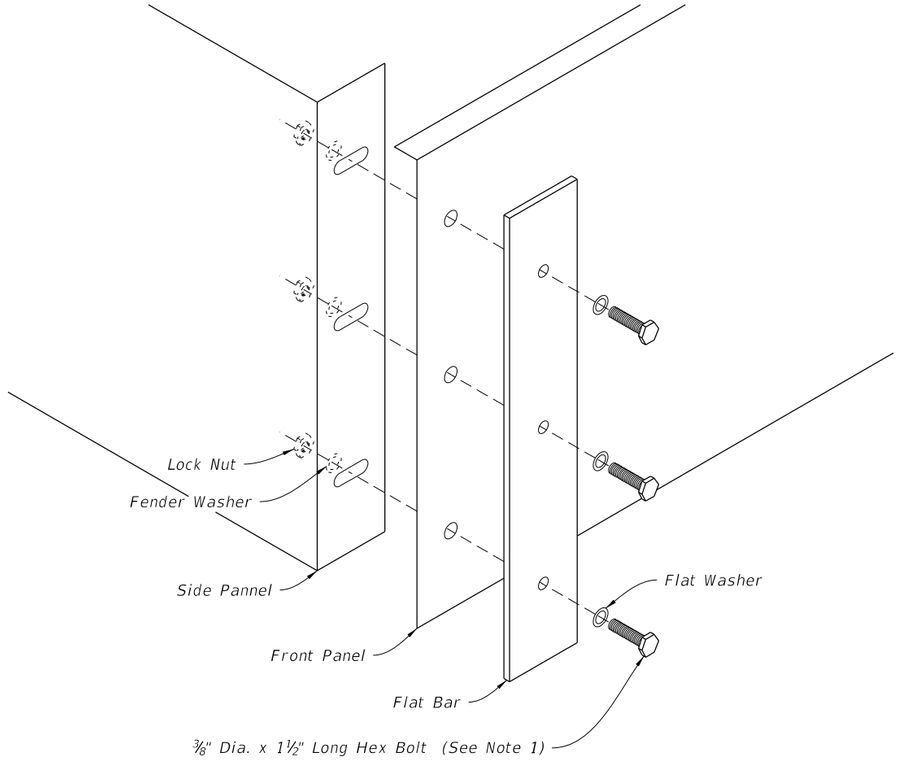

DETAIL "A"

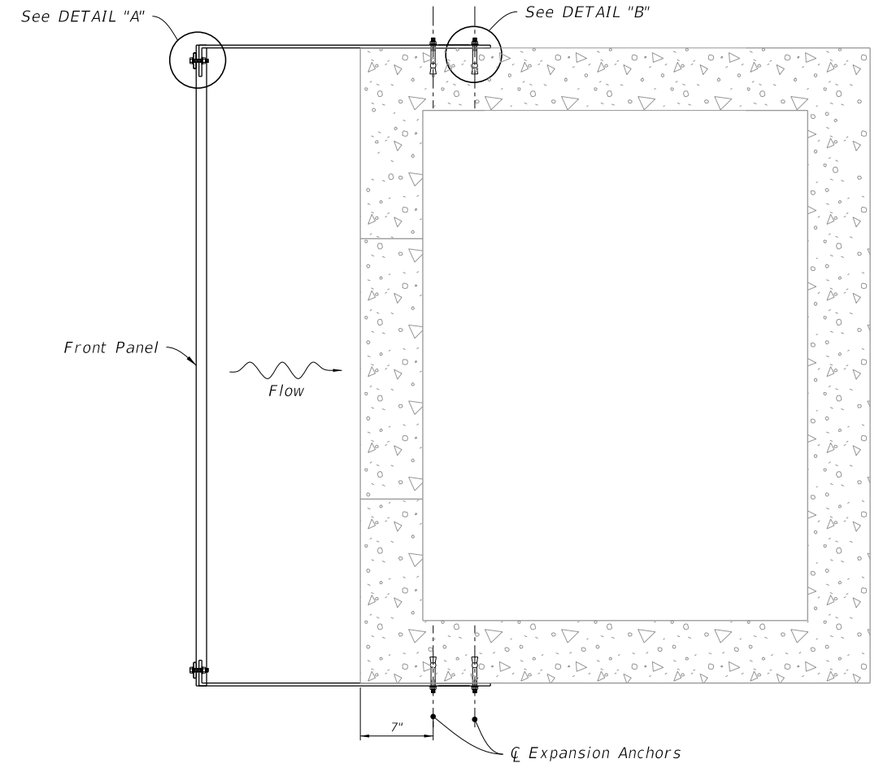

PLAN

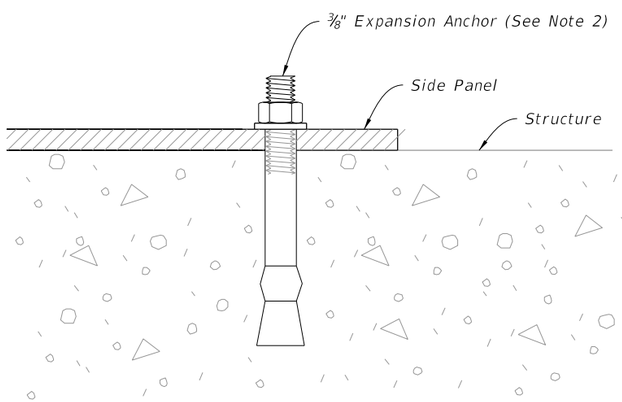

DETAIL "B"

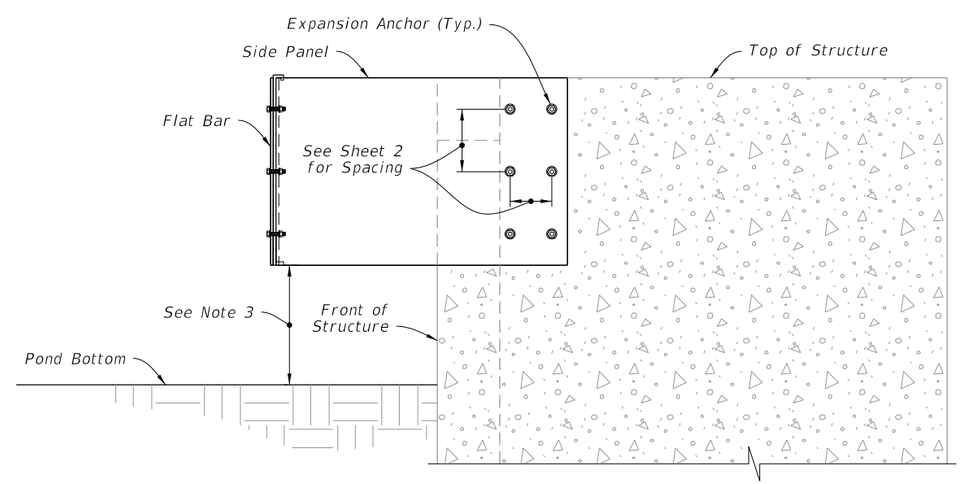

SIDE ELEVATION

NOTES:

1. Hex Bolt, Flat Washer, Fender Washer, And Lock Nut, all Stainless Steel. (6 Required Per Skimmer)
2. Install a stainless steel stud type expansion anchor with nut and washer. Embedment depth = 2½". Anchors to be installed according to the manufacturer's recommendations (12 required per skimmer).
3. Install the skimmer so that the distance between the pond bottom at the structure and the skimmer is not less than 1 foot.

INSTALLATION DETAILS

LAST REVISION	REVISION	DESCRIPTION:				
11/01/20			FDOT FY 2022-23 STANDARD PLANS	SKIMMER FOR OUTLET CONTROL STRUCTURES	INDEX 425-070	SHEET 3 of 3

9/21/2021 1:47:16 PM

GENERAL NOTES:

1. Work with Index 425-001 and Index 425-010.

2. Use Class II Concrete.

3. Maximum opening for pipe shall be the pipe OD plus 6". Mortar used to seal the pipe into the opening will be of such mix that shrinkage will not cause leakage into or out of the structure.

4. If a conflict with a potable water supply line is discovered during construction, submit the following to Florida Department of Environmental Protection (FDEP) District Administrator For Drinking Water prior to constructing conflict structure:

   a. Plans Revision(s)
   b. Justification describing inordinate cost and practical avoidance
   c. Upon request, Utility Agency Owner (UAO) supporting documentation for cost of relocation or adjustment

   Potable water supply lines passing through a drainage structure must be in compliance with Chapter 62-555.314(3) F.A.C. This Index and rule citation provide accepted methods for addressing conflicts when they cannot be reasonably avoided.

   Website for District FDEP Drinking Water Contacts:
   https://floridadep.gov/water/source-drinking-water/content/organization-drinking-water-program

TABLE OF CONTENTS:

Sheet	Description
1	General Notes and Contents
2	Utility Conflict Condition I and II Details

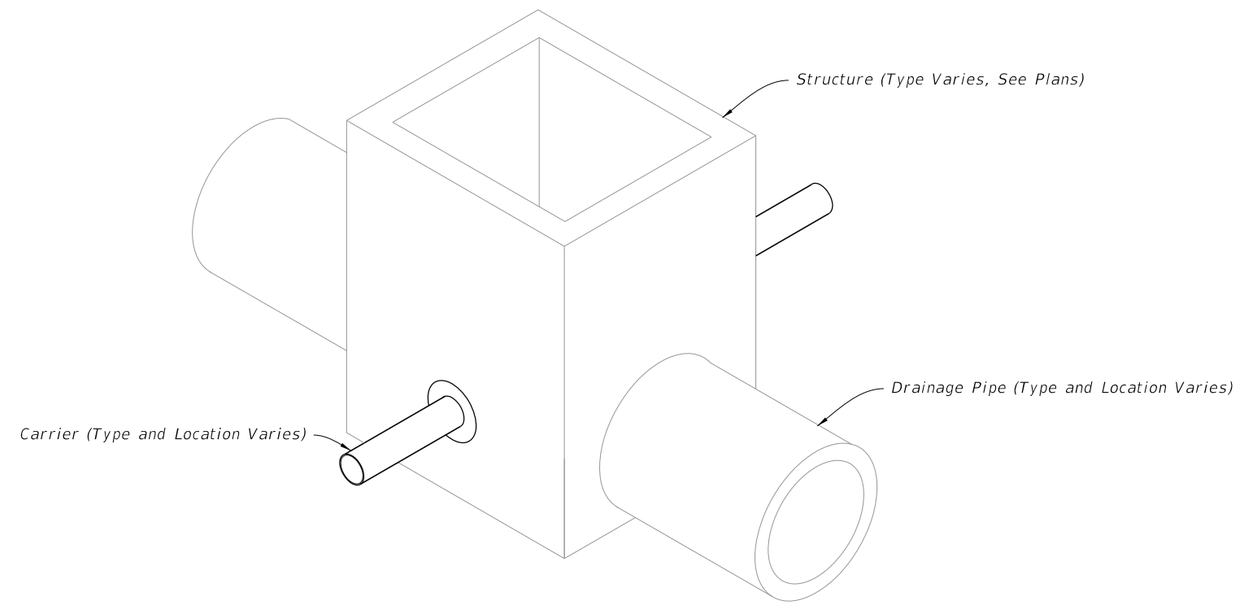

UTILITY CONFLICT
(Condition I Shown, Condition II Similar)

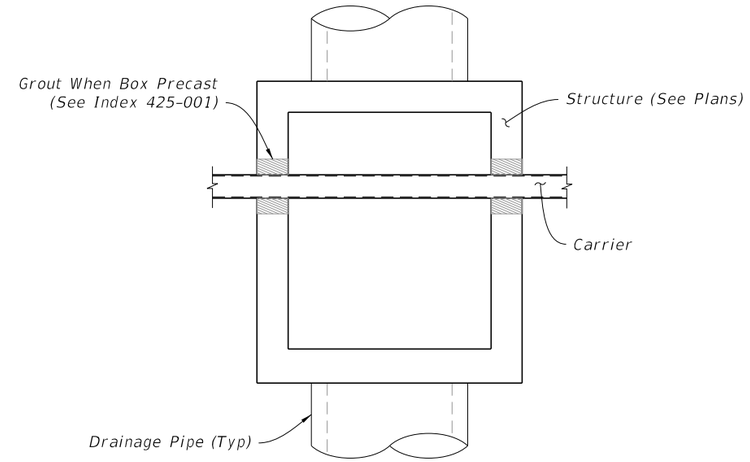

PLAN

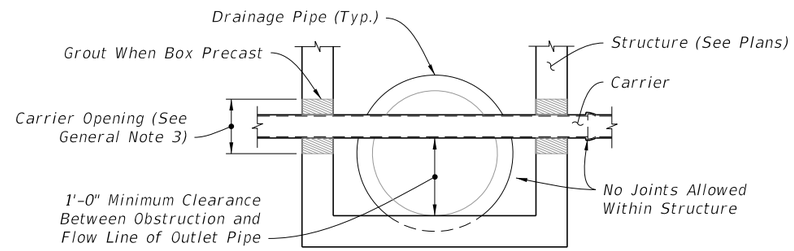

FRONT ELEVATION

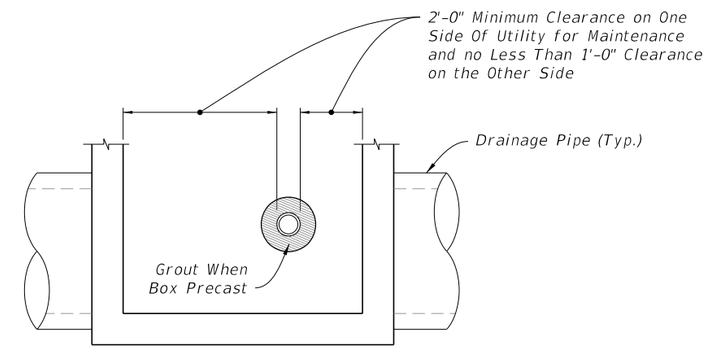

SIDE ELEVATION

UTILITY CONFLICT CONDITION I

(Nonpressure or Nonfluid Carrier Installations)

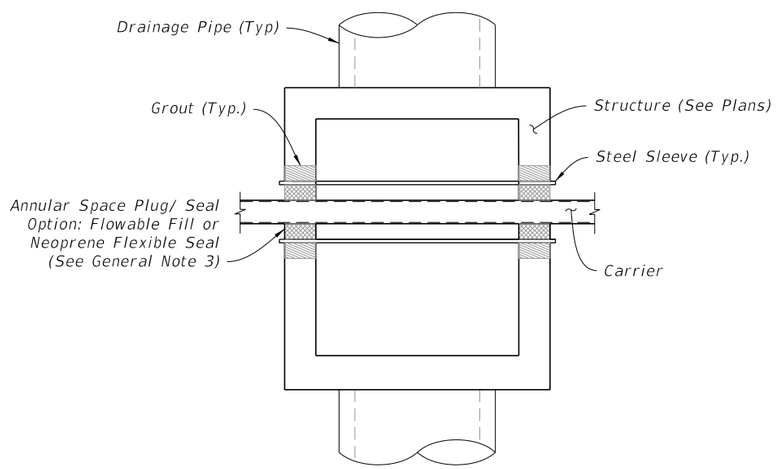

PLAN

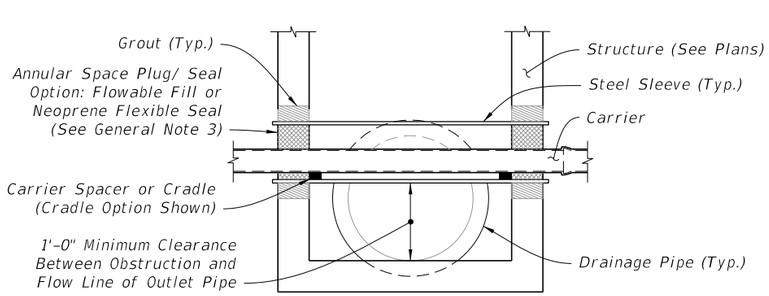

FRONT ELEVATION

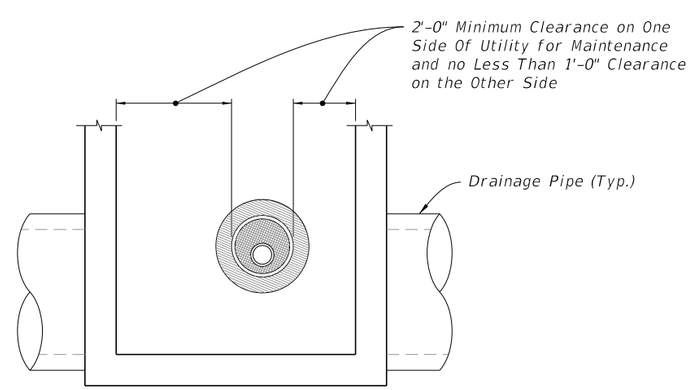

SIDE ELEVATION

UTILITY CONFLICT CONDITION II

(Pressure or Fluid Carrier Installations)

UTILITY CONFLICT CONDITION I AND II DETAILS

LAST REVISION	REVISION	DESCRIPTION:			INDEX	SHEET
11/01/20			FY 2022-23 STANDARD PLANS	UTILITY CONFLICT THRU DRAINAGE STRUCTURES	425-080	2 of 2

9/21/2021 1:47:17 PM

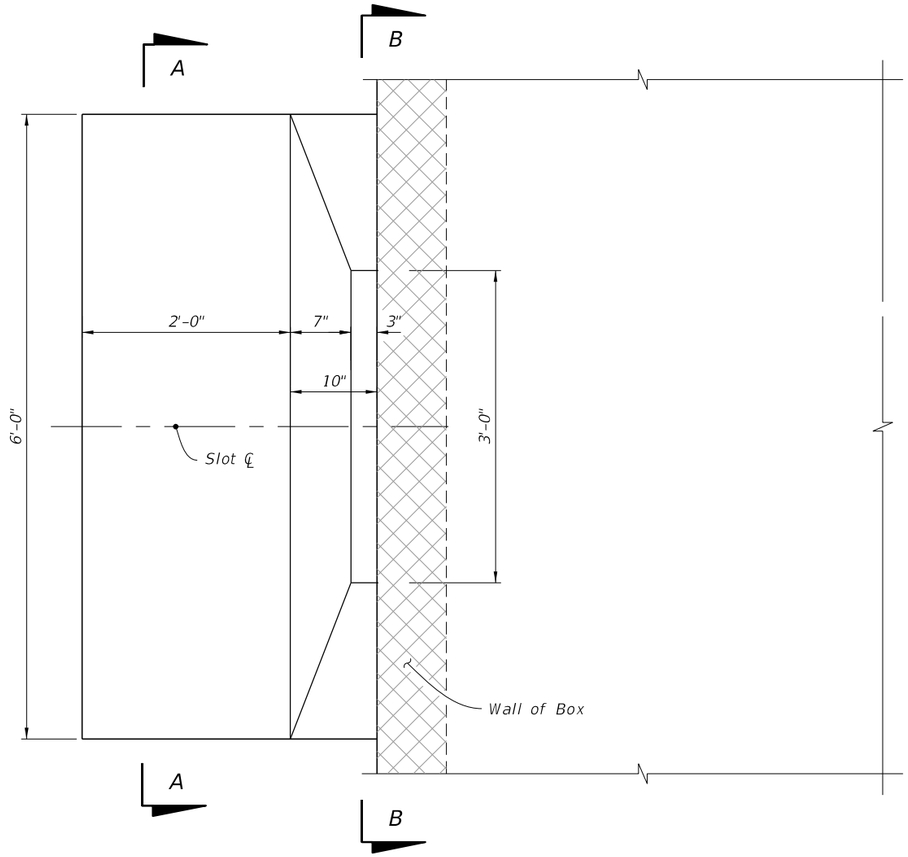

PLAN

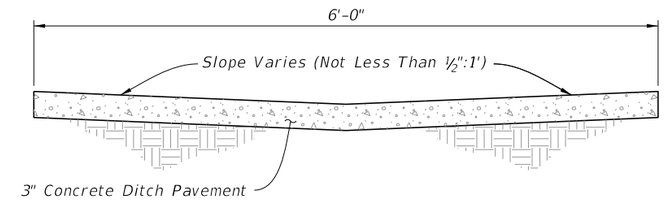

SECTION AA

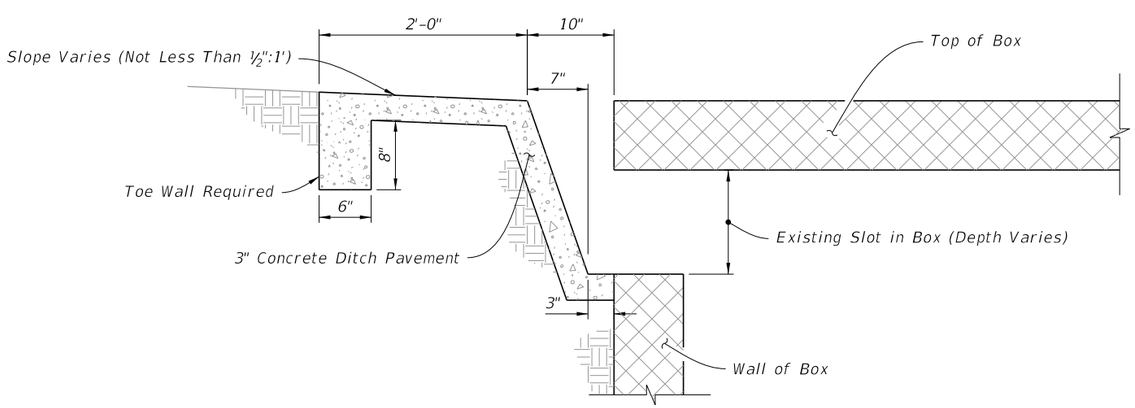

ELEVATION

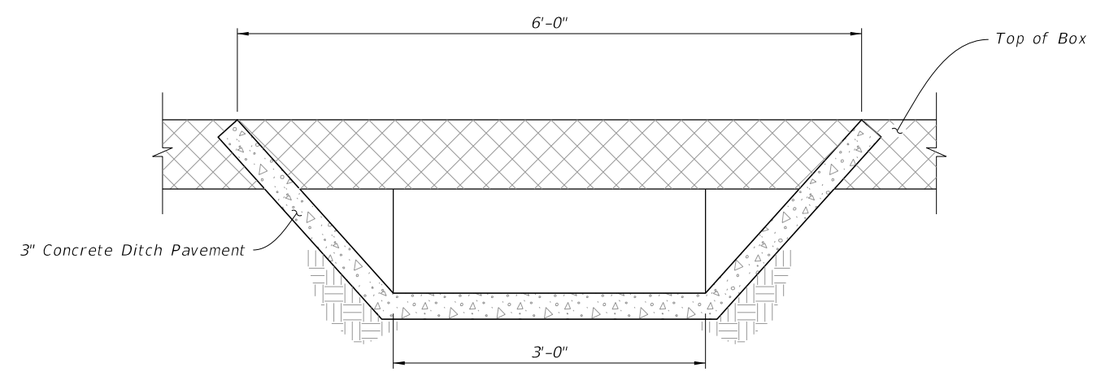

SECTION BB

INLET IN BOX CULVERT

9/21/2021 1:47:18 PM

LAST REVISION	REVISION	DESCRIPTION:			INDEX	SHEET
11/01/20			FY 2022-23 STANDARD PLANS	SAFETY MODIFICATION FOR INLETS IN BOX CULVERTS	425-090	1 of 1

NOTES:

1. Fill or excavate variable slopes during normal grading operations.
2. Minimum distance as required to comply with safety criteria.
3. Use Larger Value Of Either:
   L=10xH (No Maximum)
   L=10xDitch Offset (Maximum L=100')
4. Slope to normal slope if possible. Slope not to be steeper than 1:2. See side elevation (extended) below if 1:2 slope must go beyond toe of normal slope.
5. 1:2 slope if necessary to go beyond normal toe of slope and maintain ditch width by moving out back slope.

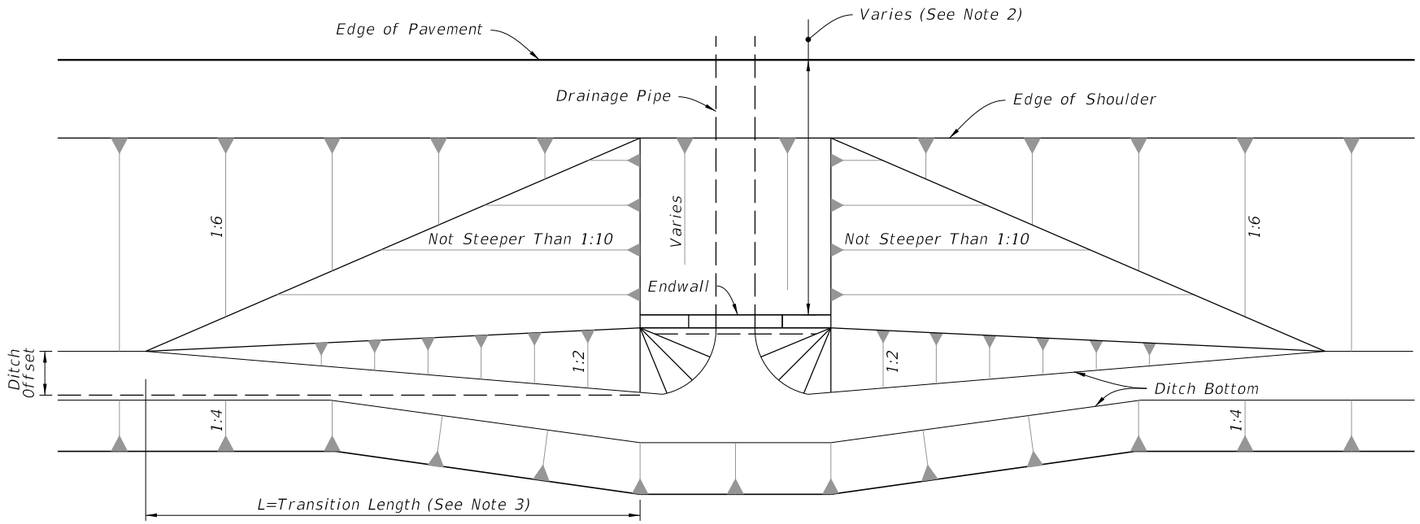

PLAN

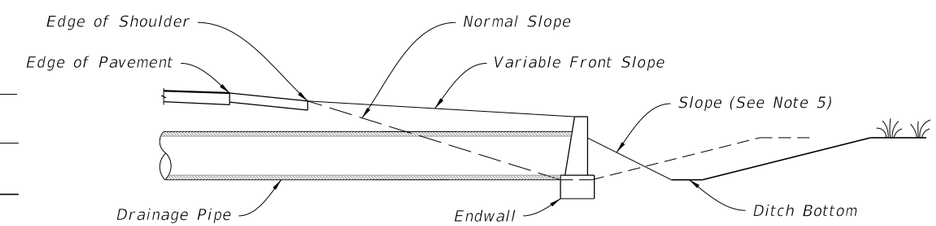

SIDE ELEVATION (EXTENDED)

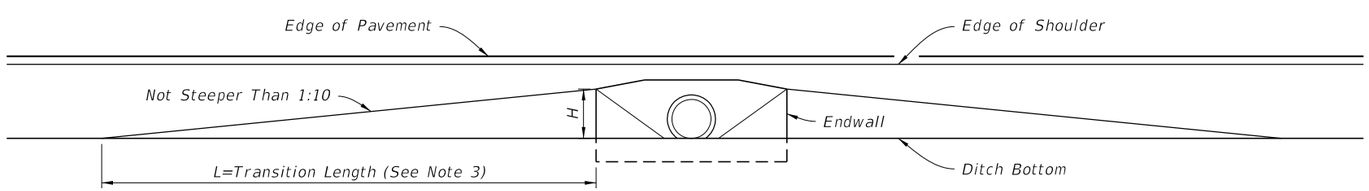

END ELEVATION

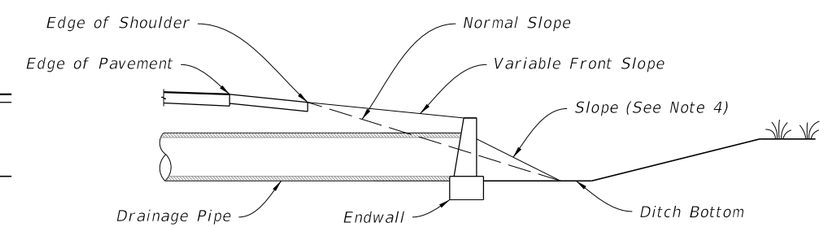

SIDE ELEVATION (TYPICAL)

FRONT SLOPES AT DRAINAGE STRUCTURES

TABLE OF CONTENTS:

Sheet	Description
1	Limits of Variable Front Slopes at Drainage Structures
2	Round and Elliptical Concrete Pipe Joint
3	Filter Fabric Jacket, Concrete Jacket, and Pipe Plug
4	Concrete Collars
5	Single Pipe End Guard
6	Double Pipe End Guard
7	Retaining Wall Concrete Gutter and Drains

LIMITS OF VARIABLE FRONT SLOPES AT DRAINAGE STRUCTURES

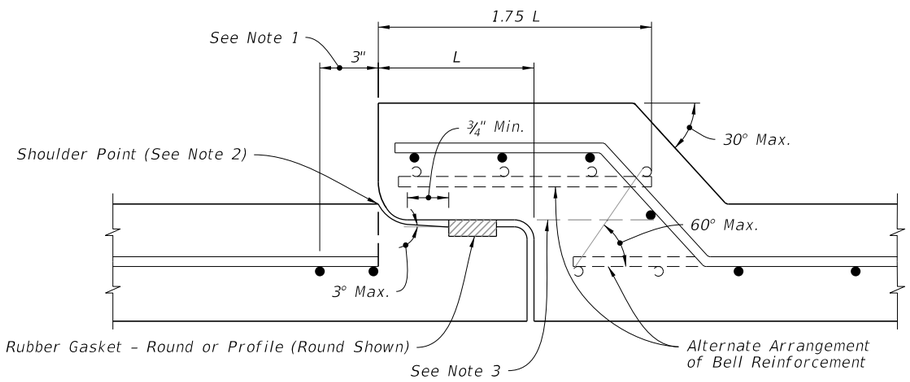

TABLE 1 SCHEDULE OF BELL REINFORCEMENT Classes II,III,IV,V; Wall A,B,C		
Nominal Pipe Diameter	Design Bell Reinforcement	Maximum Reinforcement Under Tolerance
	in^2 per foot	in^2 per foot
15"	0.07	0.010
18"	0.07	0.010
24"	0.09	0.010
30"	0.12	0.010
36"	0.14	0.010
42"	0.16	0.010
48"	0.19	0.011
54"	0.21	0.012
60"	0.23	0.0135
66"	0.26	0.015
72"	0.28	0.0165
78"	0.30	0.018
84"	0.33	0.0195
90"	0.35	0.021
96"	0.37	0.0225
102"	0.40	0.024
108"	0.42	0.0255

NOTES:

1. Allowable Tolerance for the last full wrap of reinforcing when using single elliptical cage.
2. Extend the last full wrap of reinforcing to the shoulder point and meet ASTM C-76 requirements.
3. All circumferential steel located above this line and within the 1.75 L is defined as bell reinforcement.

ROUND CONCRETE PIPE JOINT DETAIL

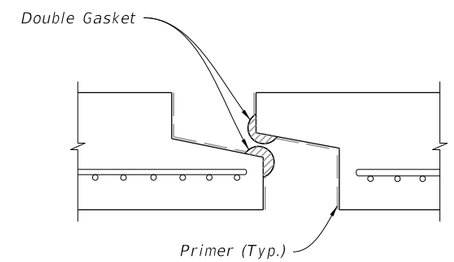

PREFORMED PLASTIC JOINT

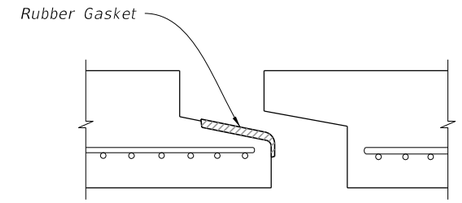

PROFILE RUBBER GASKET

NOTES:

1. Filter Fabric Jacket is required on both type of joints.
2. Details shown before pull-up.

ELLIPTICAL CONCRETE PIPE JOINT DETAIL

ROUND AND ELLIPTICAL CONCRETE PIPE JOINT

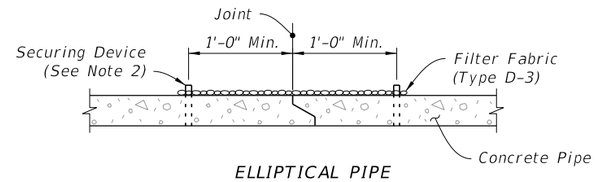

ELLIPTICAL PIPE
(Tongue & Groove Shown)

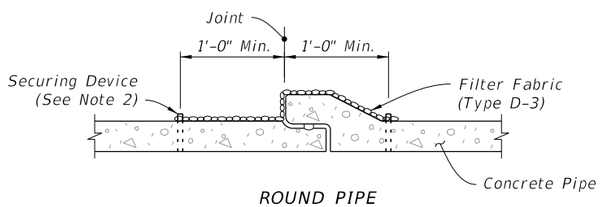

ROUND PIPE
(Bell & Spigot Shown)

SECTION VIEW

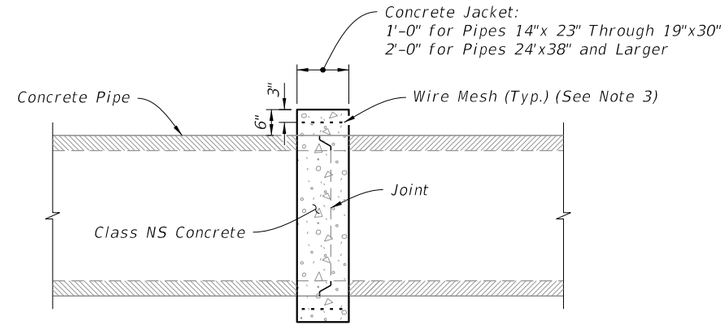

ELLIPTICAL PIPE

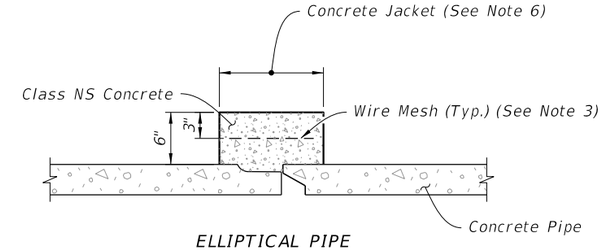

ELLIPTICAL PIPE
(Tongue & Groove Shown)

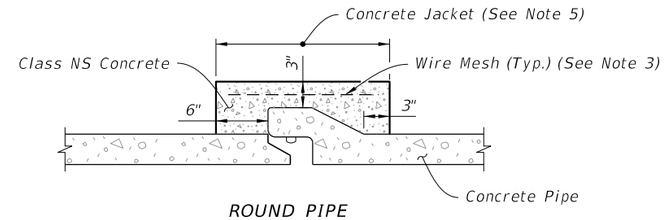

ROUND PIPE
(Bell & Spigot Shown)

DISSIMILAR JOINTS

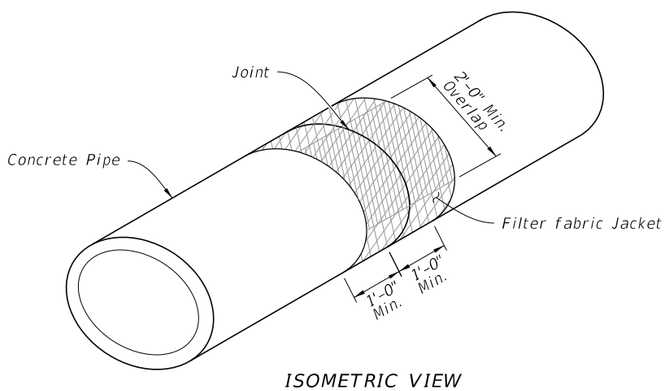

ISOMETRIC VIEW

FILTER FABRIC JACKET

(For All Pipe Types - Concrete Elliptical Pipe Shown)

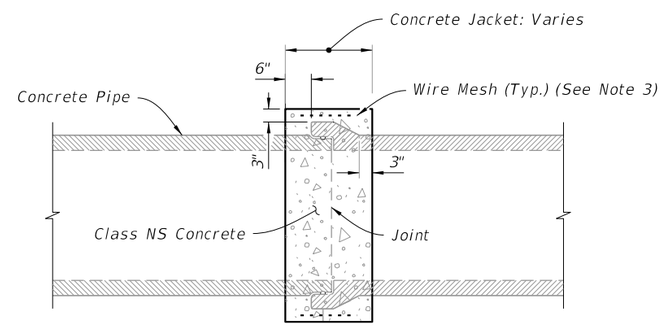

ROUND PIPE

SIMILAR TYPES
(Only When Called For In The Plans)

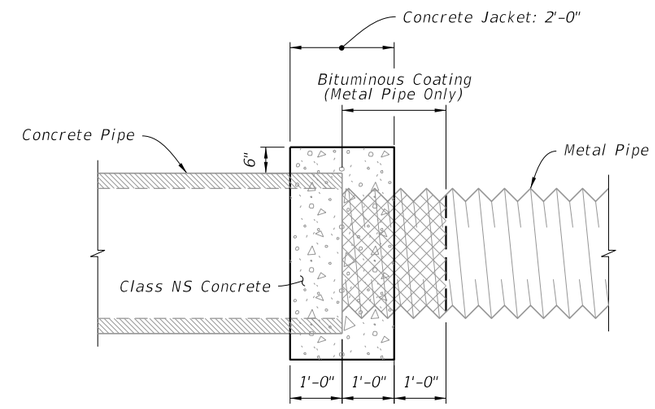

CONCRETE AND METAL PIPE SHOWN
(Others Similar)

DISSIMILAR TYPES

CONCRETE JACKET

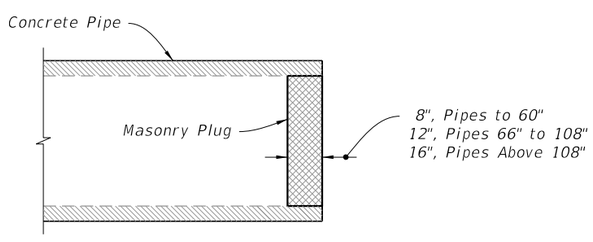

PIPE PLUG

NOTES:

1. Alternate connection must be approved by the Engineer.
2. Install securing device in accordance with Specification 985.
3. Any wire mesh arrangement which provides 0.126 square inches of steel area per linear foot both ways may be used, provided the wires are spaced a minimum of 2" and/or a maximum of 6" on centers.
4. Do not use a concrete jacket to join dissimilar metal pipes.
5. 12" for pipes 15" through 24"; 24" for pipes 30" and larger.
6. 12" for pipes 14" x 23" through 19" x 30"; 24" for pipes 24" x 38" and larger.

FILTER FABRIC JACKET, CONCRETE JACKET, AND PIPE PLUG

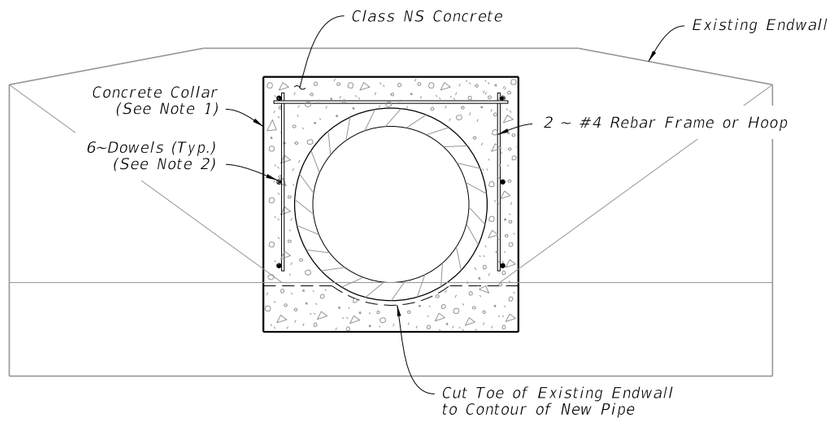

END ELEVATION

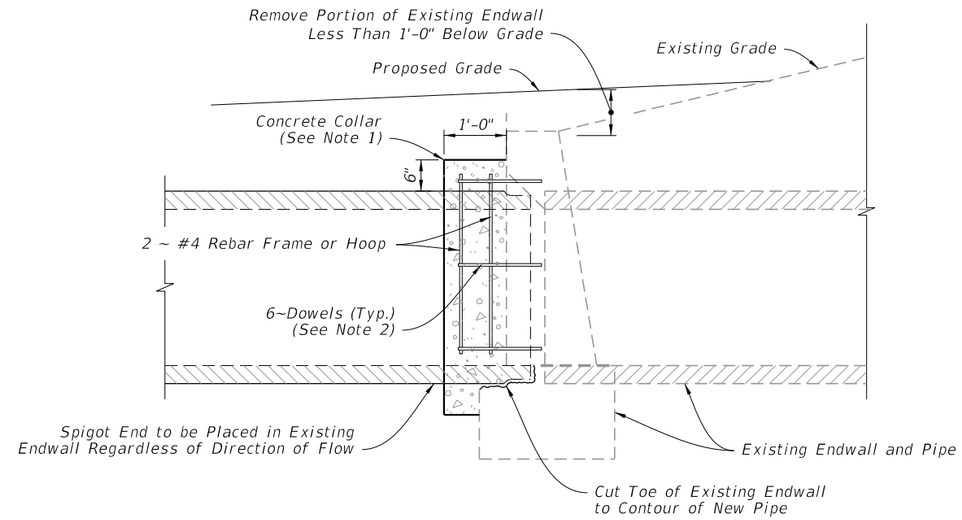

SIDE ELEVATION

EXTENSION OF EXISTING PIPE CULVERTS

NOTES:

1. The collar may be formed by any method approved by the Engineer.
2. Install ½"x16" dowels in adhesive bond material.

9/21/2021 1:47:20 PM

CONCRETE COLLARS

LAST REVISION	REVISION	DESCRIPTION:			INDEX	SHEET
11/01/21			FY 2022-23 STANDARD PLANS	MISCELLANEOUS DRAINAGE DETAILS	430-001	4 of 7

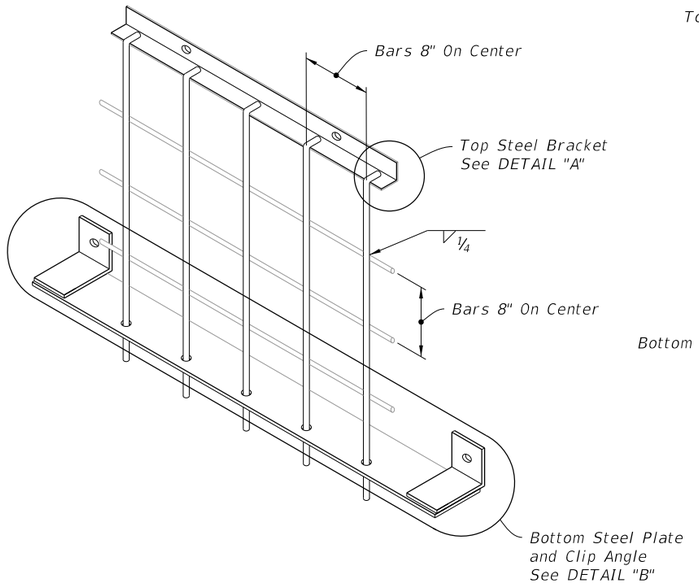

ISOMETRIC VIEW

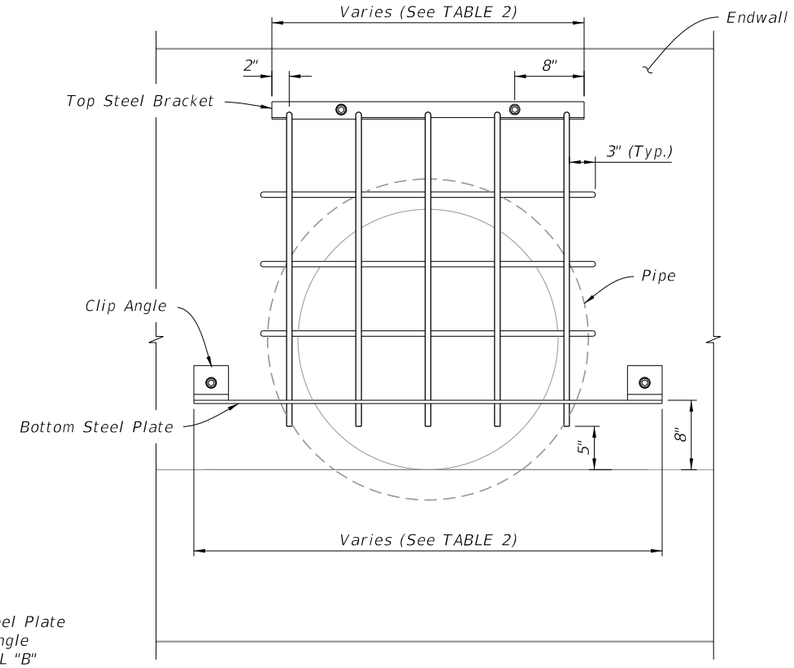

END ELEVATION

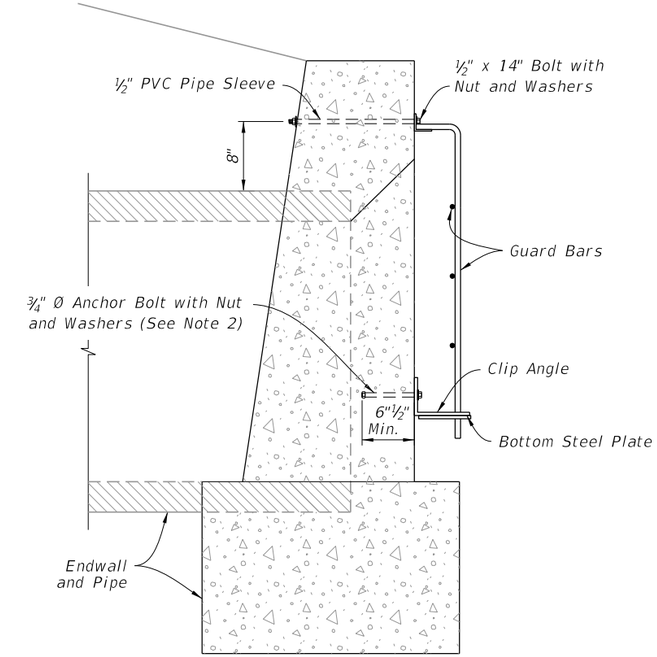

SIDE ELEVATION

SINGLE GUARD
(30" Pipe Shown)

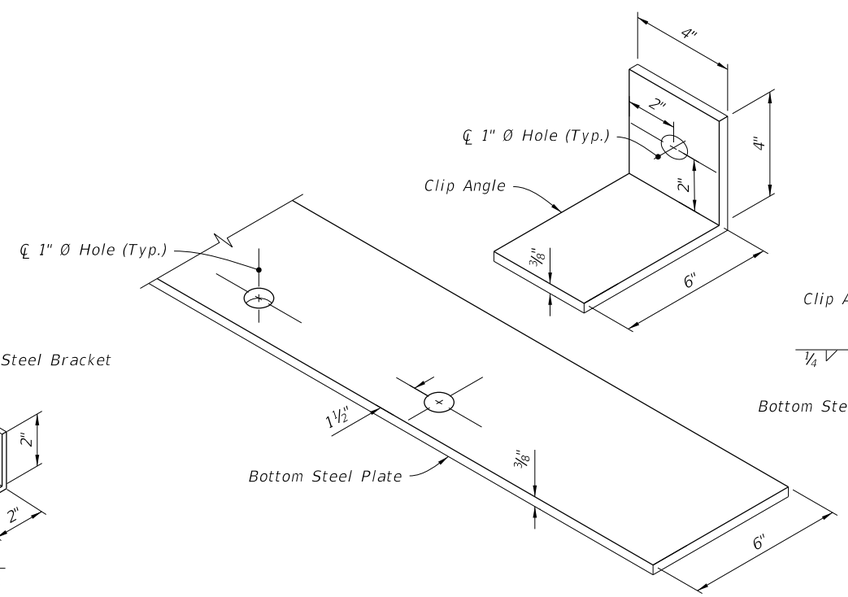

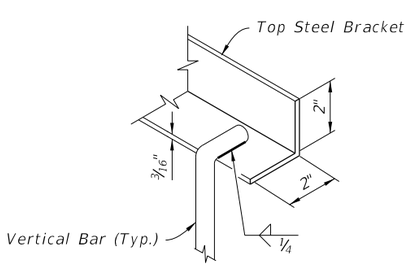

DETAIL "A"

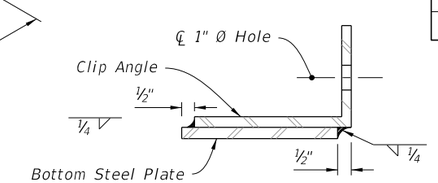

DETAIL "B"

TABLE 2 - SINGLE GUARD								
Pipe Dia. (in)	Top Steel Bracket	Bottom Steel Plate	Number of Holes	Number of Vert. Bars	Vertical Bars Size	Number of Horiz. Bars	Horizontal Bars Size	Weight lbs.
18	2'-4"	3'-6"	4	4	1/2"	1	1/2"	48
24	3'-0"	4'-0"	5	5	1/2"	2	1/2"	58
30	3'-0"	4'-6"	5	5	5/8"	3	5/8"	74
36	3'-8"	5'-0"	6	6	5/8"	4	5/8"	90
42	4'-4"	5'-6"	7	7	5/8"	5	5/8"	111

NOTES:

1. Construct guards only at locations specifically called for in Plans.
2. Anchor Bolts (Galvanized): Use C-I-P Hex Head bolts or fully threaded adhesive anchors, installed in accordance with Specification 416.

9/21/2021 1:47:21 PM

SINGLE PIPE END GUARD

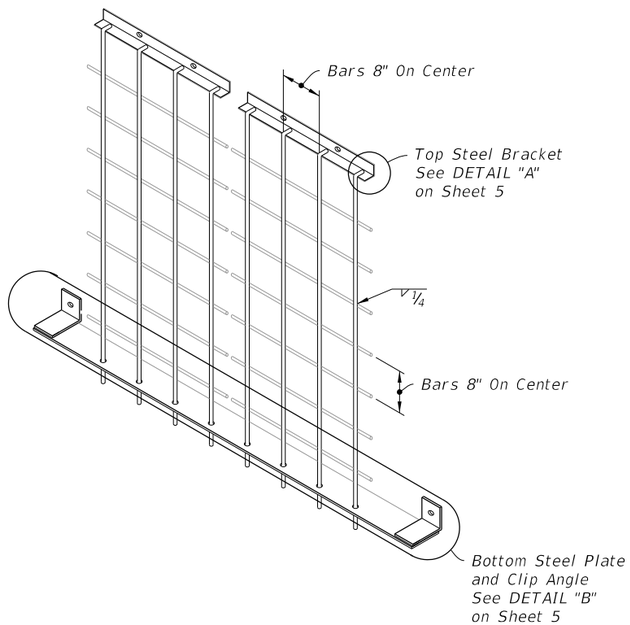

ISOMETRIC VIEW

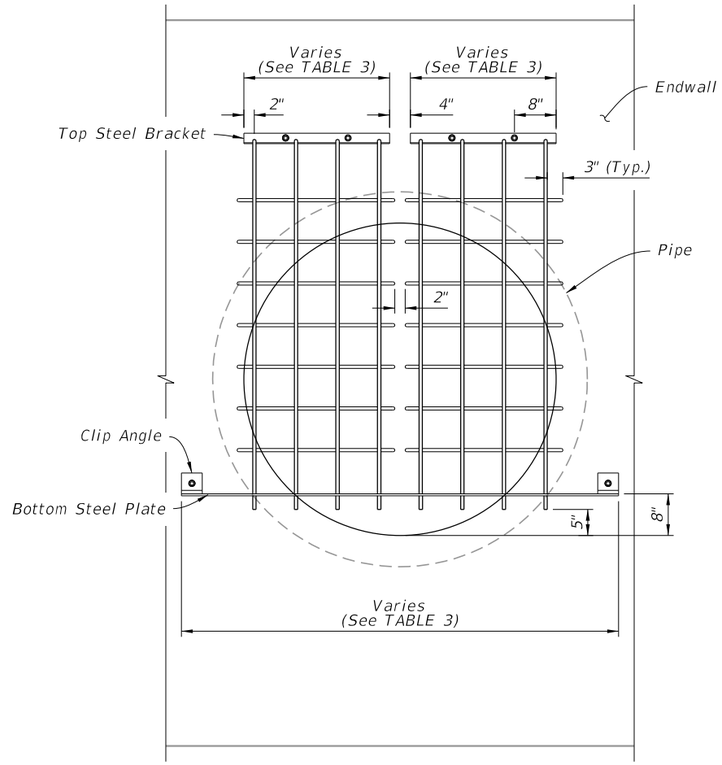

END ELEVATION

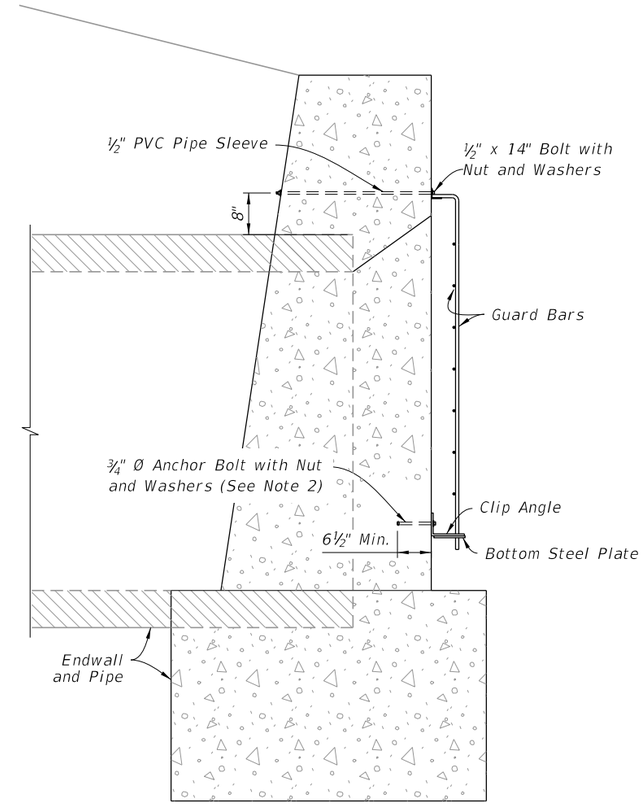

SIDE ELEVATION

DOUBLE GUARD
(60" Pipe Shown)

NOTES:

1. Construct guards only at locations specifically called for in Plans.

2. Anchor Bolts (Galvanized): Use C-I-P Hex Head bolts or fully threaded adhesive anchors, installed in accordance with Specification 416.

TABLE 3 - DOUBLE GUARD

Pipe Dia. (in)	Top Steel Bracket Grate 1	Top Steel Bracket Grate 2	Bottom Steel Plate	Number of Total Holes	Number of Vert. Bars Grate 1	Number of Vert. Bars Grate 2	Vertical Bars Size	Number of Horiz. Bars (each grate)	Horizontal Bars Size	Weight lbs.
48	2'-4"	2'-4"	6'-0"	8	4	4	5/8"	5	5/8"	127
54	2'-4"	2'-4"	6'-6"	8	4	4	3/4"	6	5/8"	157
60	2'-4"	2'-4"	7'-0"	8	4	4	3/4"	7	5/8"	172

9/21/2021 1:47:22 PM

DOUBLE PIPE END GUARD

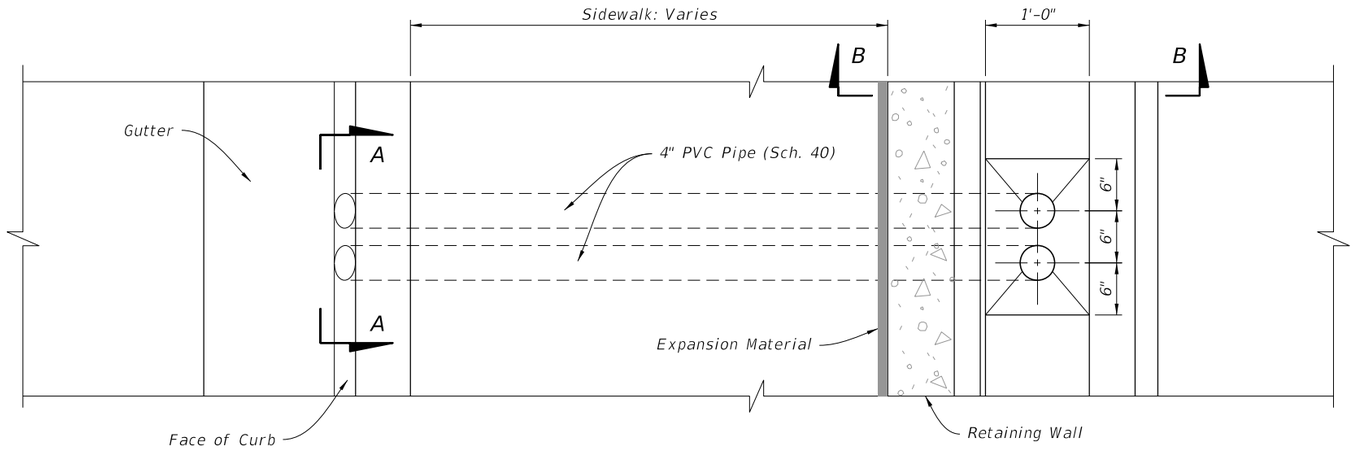

PLAN

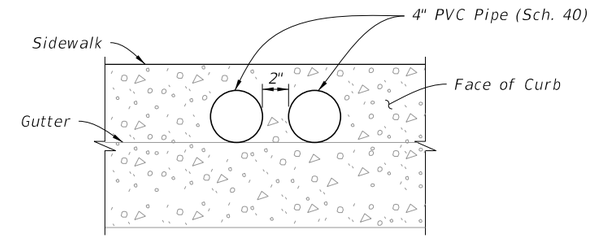

SECTION A-A

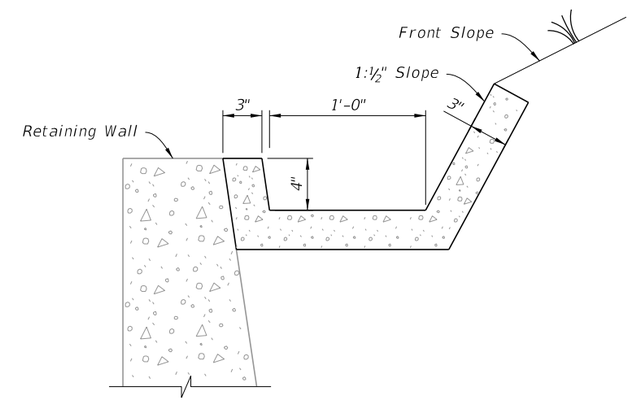

SECTION B-B

Note:
Grade Sidewalk slope toward gutter. Match PVC pipe slope under sidewalk with sidewalk slope.

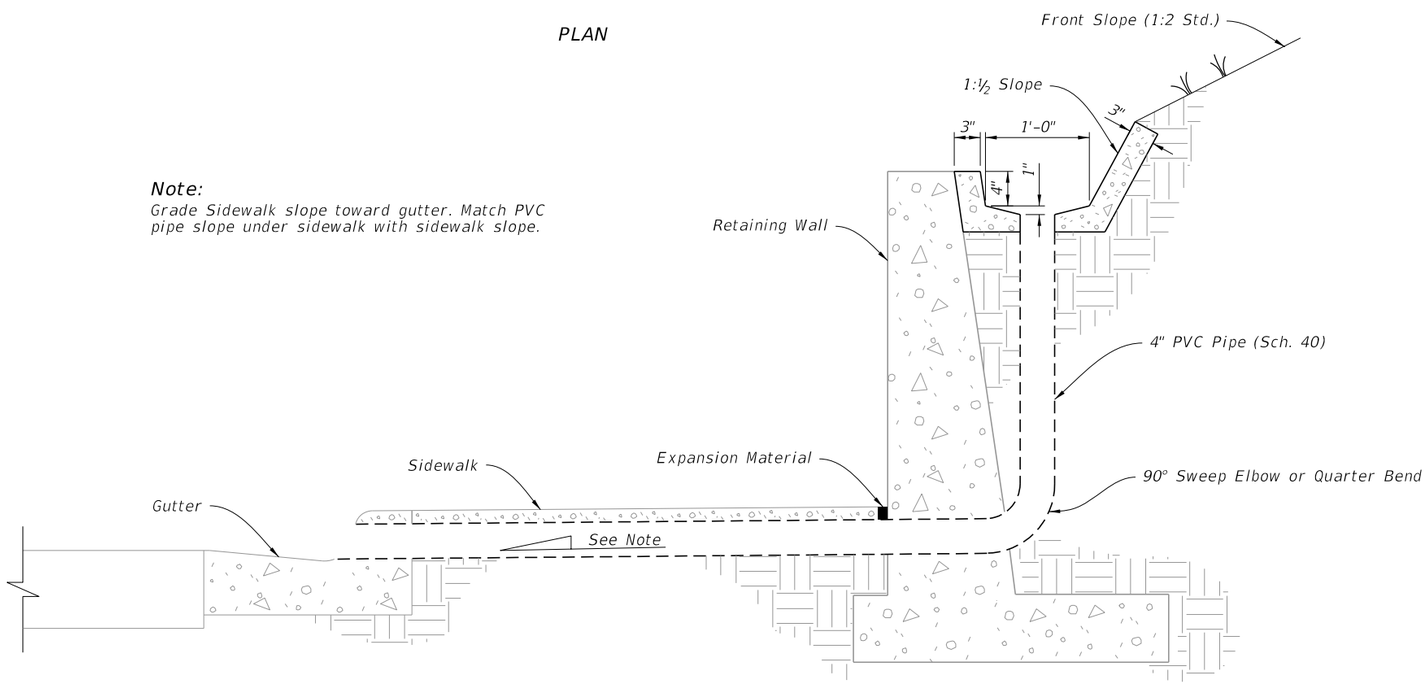

ELEVATION

GUTTER AND DRAINS

RETAINING WALL CONCRETE GUTTER AND DRAINS

LAST REVISION	REVISION	DESCRIPTION:			INDEX	SHEET
11/01/20			FDOT FY 2022-23 STANDARD PLANS	MISCELLANEOUS DRAINAGE DETAILS	430-001	7 of 7

9/21/2021 1:47:22 PM

GENERAL NOTES:

1. Use Class II concrete.

2. Reinforcing steel: All bars are size #4. Spacings shown are center to center. Laps to be 1'-5" minimum. Cover is 2" except as noted. Square welded wire fabric (two cages max.) having an equivalent cross sectional area (0.20 sq. in.) may be substituted for bar reinforcement.

3. Endwall may be cast in place or precast concrete. Construct precast units to dimensions shown, or as shown in approved shop drawings. Use Index 425-001 for opening and grouting details.

4. Quantities shown are for estimating purposes only.

TABLE OF CONTENTS:

Sheet	Description
1	General Notes and Contents
2	Dimensional and Reinforcing Details
3	Type 1 and Type 2 Grate Details

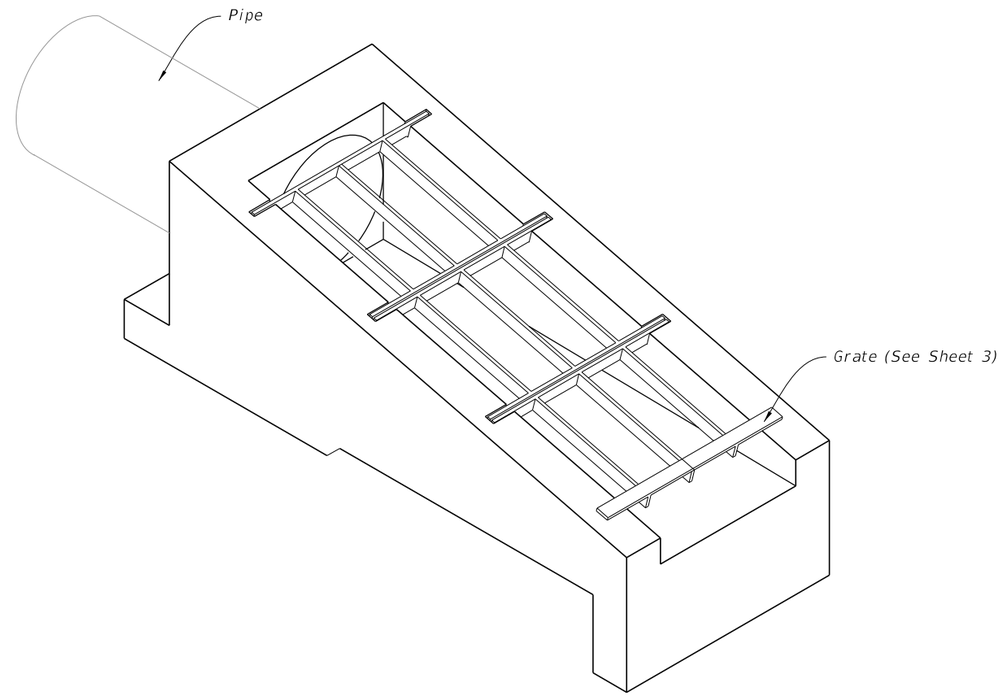

U-TYPE CONCRETE ENDWALLS 15" TO 30" PIPES WITH GRATES
(24" Pipe Shown)

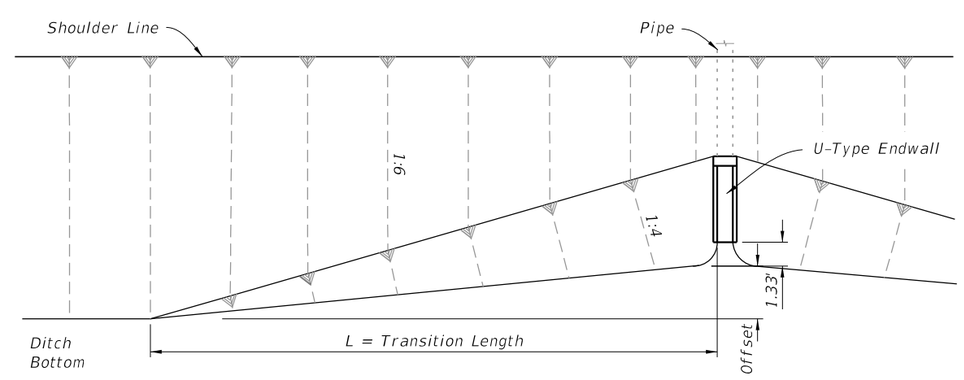

TABLE 1
SLOPE TRANSITIONS

	Pipe Dia.	Offset (Ft.)	L (Ft.)
Slope 1:4	15"	4.2	42
	18"	4.8	48
	24"	5.8	58
	30"	6.9	69

FRONT SLOPE TRANSITION AT ENDWALL

9/21/2021 1:47:23 PM

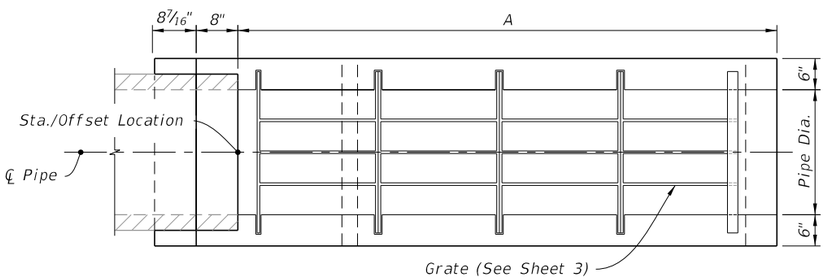

PLAN

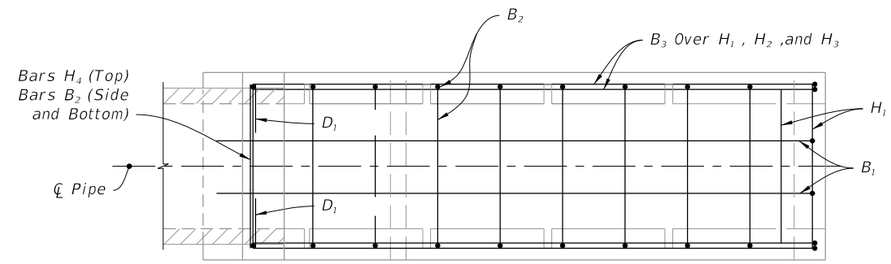

PLAN

LEGEND:

H = Horizontal Bars

V = Vertical Bars

B = Bent Bars

D = Dowels or Diagonal Bars

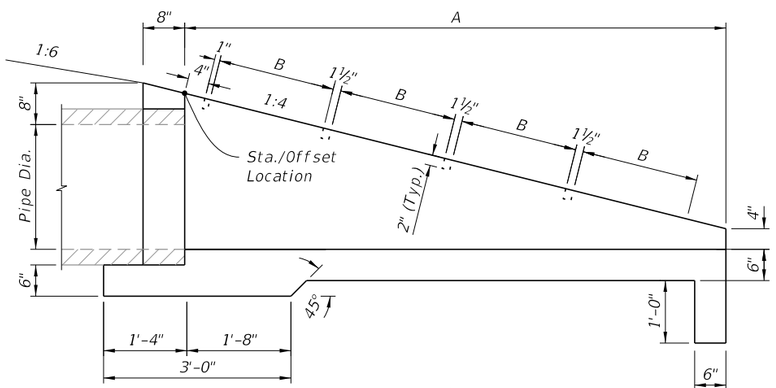

ELEVATION

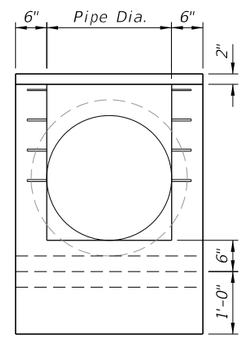

END VIEW

DIMENSIONAL DETAIL

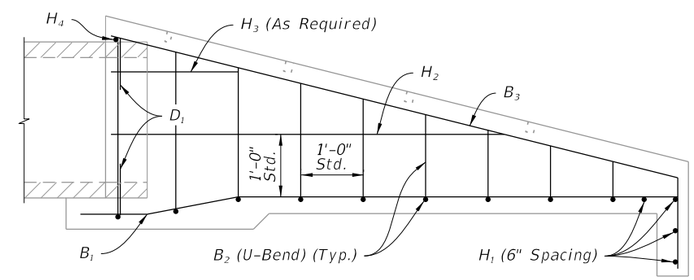

ELEVATION

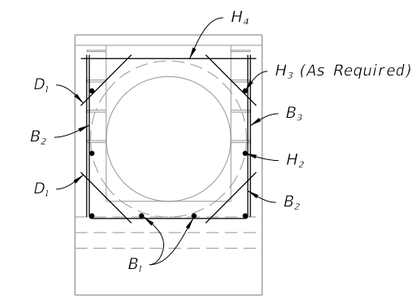

END VIEW

REINFORCING DETAIL

TABLE 2
DIMENSIONS AND QUANTITIES

	Pipe Dia.	A (Ft.)	B (Ft)	Class II Conc. (CY)	Reinf. Steel (lbs.)
Slope 1:4	15"	5.67	2.38	0.85	56
	18"	6.67	1.875	1.01	73
	24"	8.67	1.875	1.65	97
	30"	10.67	1.875	2.33	129

9/21/2021 1:47:23 PM

DIMENSIONAL AND REINFORCING DETAILS

LAST REVISION	REVISION	DESCRIPTION:				INDEX	SHEET
11/01/21			FDOT	FY 2022-23 STANDARD PLANS	U-TYPE CONCRETE ENDWALLS 15" TO 30" PIPES WITH GRATES	430-010	2 of 3

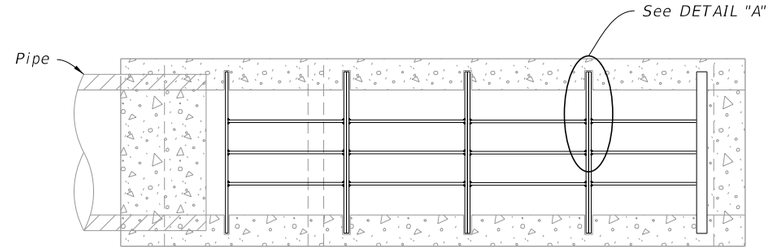

PLAN

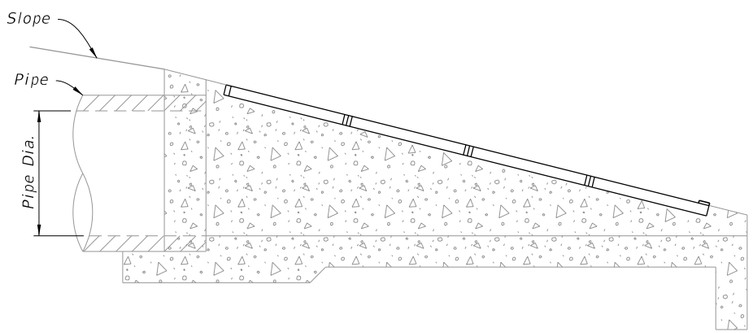

ELEVATION

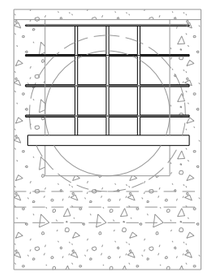

END VIEW

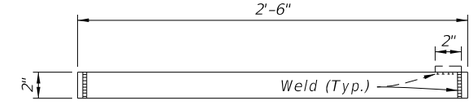

SIDE VIEW

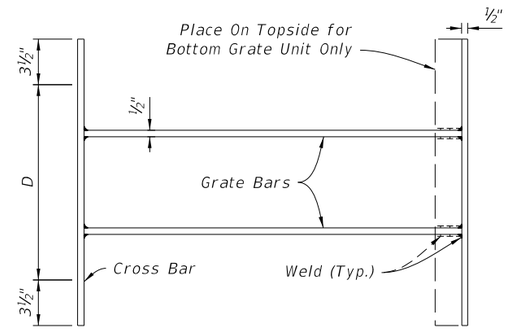

TOP VIEW

TYPE 1

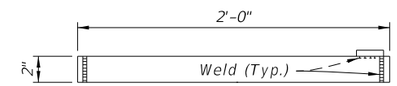

SIDE VIEW

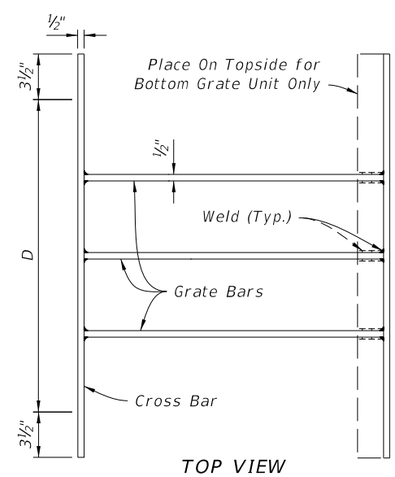

TOP VIEW

TYPE 2

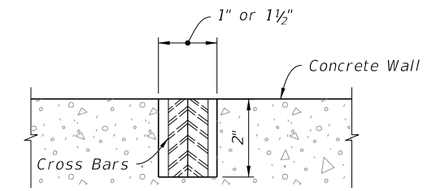

SECTION A-A

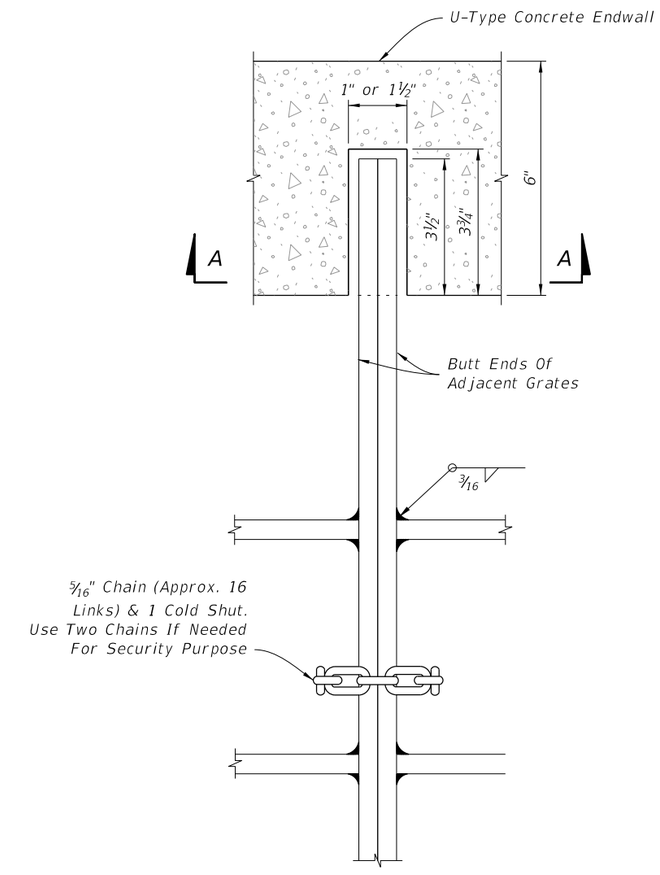

GRATE, SEAT, WELD & CHAIN DETAIL

NOTES:

1. Install grate bars evenly spaced across dimension D.

2. All bars and grate bars are ½" x 2".

TABLE 3
NUMBER OF GRATE BARS AND GRATES REQUIRED

Pipe Dia. D	Grate Bars Reqd.		Grate Wt. (lbs.)	Grate Reqd.		Total Grate Wt. (lbs.)
	Type No. 1	Type No. 2		Type No. 1	Type No. 2	
15"	2	0	28.93	2	0	57.86
18"	0	3	33.69	0	3	101.08
24"	0	4	43.63	0	4	174.52
30"	0	5	53.55	0	5	267.75

TYPE 1 AND TYPE 2 GRATE DETAILS

DETAIL "A"

TYPE 1 AND TYPE 2 GRATE DETAILS

GENERAL NOTES:

1. Use Class II concrete.
2. Construct Baffles only when called for in Plans.
3. See Sheet 5 when steel grating is required on endwall.
4. All reinforcing #4 bars with 2" clearance except as noted.
5. Channel section C 3x6 may be substituted for C 4x5.4 channel.
6. Endwall may be cast in place or precast concrete. Construct precast units to dimensions shown, or as shown in approved shop drawings. Submit requests for shop drawing approvals to the Engineer. Use Index 425-001 for opening and grouting details.
7. Quantities shown are for estimating purposes only.

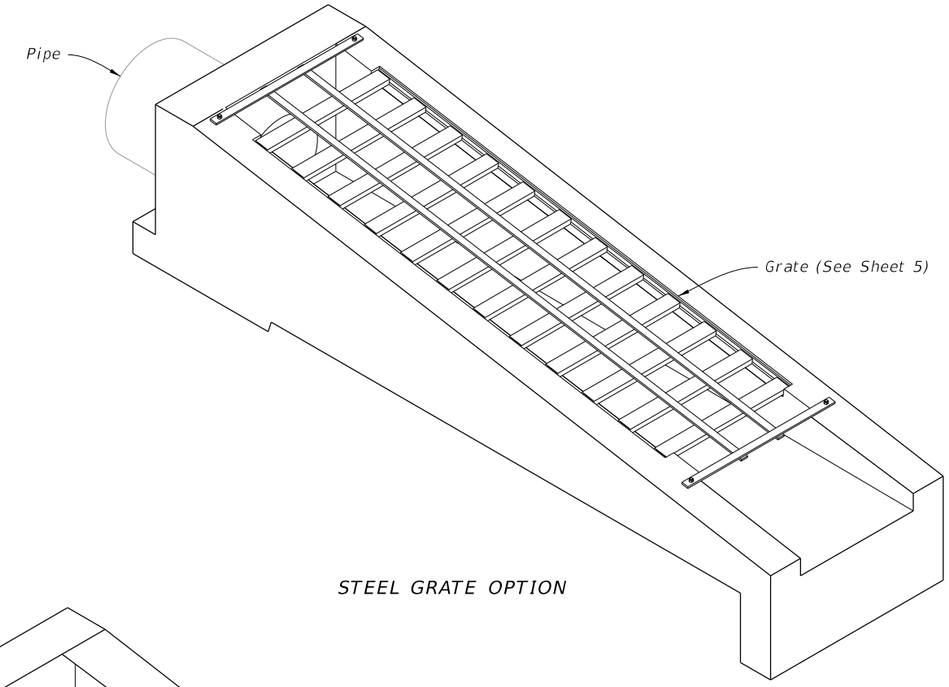

STEEL GRATE OPTION

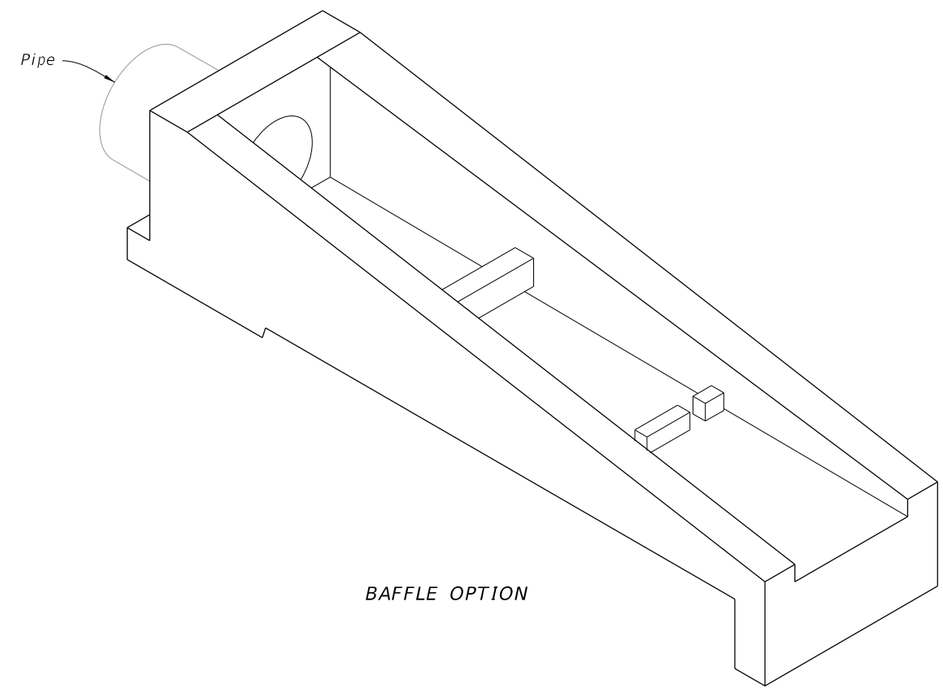

BAFFLE OPTION

U-TYPE CONCRETE ENDWALLS

TABLE OF CONTENTS:

Sheet	Description
1	General Notes and Contents
2	Endwalls for 1:2 Slopes With Baffles
3	Endwalls for 1:2 Slopes Without Baffles and Bending Bar Diagram
4	Endwalls for 1:3, 1:4, and 1:6 Slopes
5	Steel Grate Option

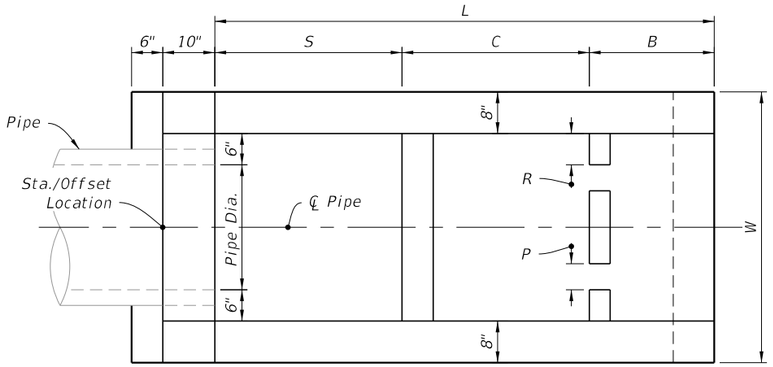

PLAN

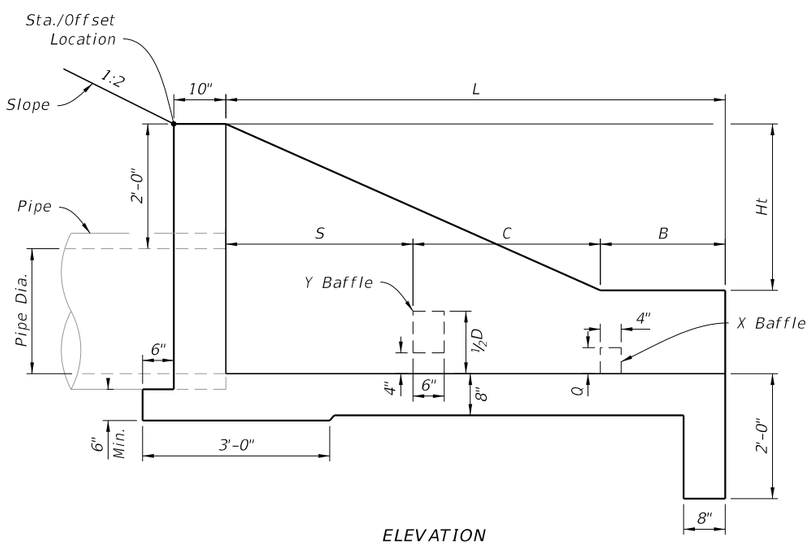

ELEVATION

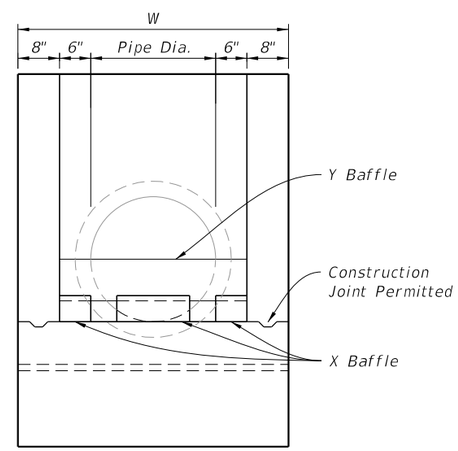

FRONT VIEW

DIMENSIONAL DETAILS

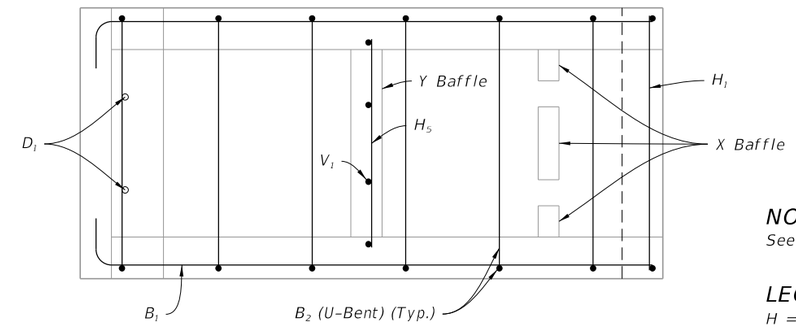

PLAN

NOTE:
See Sheet 3 for Bar Bending Diagram.

LEGEND:
H = Horizontal Bars
V = Vertical Bars
B = Bent Bars
D = Dowels or Diagonal Bars

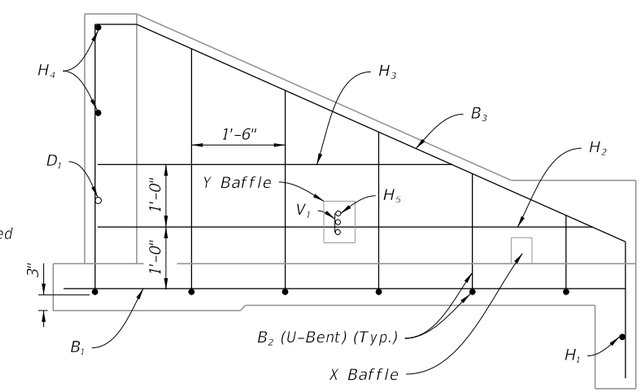

ELEVATION

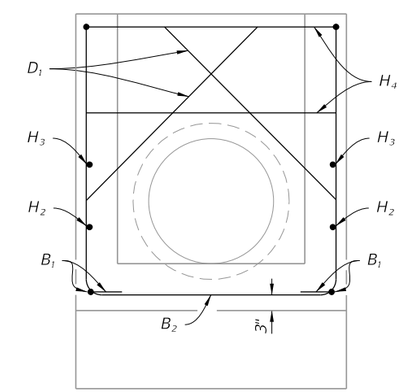

BACK VIEW

REINFORCING DETAILS

TABLE-1
DIMENSIONS AND QUANTITIES FOR ONE U-ENDWALL

Pipe		L	Ht	W	S	B	C	X Baffle			Y Baffle Reinf. Steel		Class II Conc. Cu. Yd.	Reinf. Steel lbs.
Dia.	Area Sq. Ft.							P	Q	R	Bars V_1	Bars H_5		
15"	1.23	5'-9"	2'-3½"	3'-7"	2'-3"	1'-3"	2'-3"	4"	4"	4"	2 #4	1 #4	1.61	72
18"	1.77	6'-6"	2'-5"	3'-10"	2'-6"	1'-6"	2'-6"	4"	4"	5"	3 #4	2 #4	1.89	86
24"	3.14	8'-0"	2'-8"	4'-4"	3'-0"	2'-0"	3'-0"	5"	5"	6"	4 #4	3 #4	2.52	108
30"	4.91	9'-6"	2'-11"	4'-10"	3'-6"	2'-6"	3'-6"	5"	5"	7"	4 #4	4 #4	3.34	131

ENDWALLS FOR 1:2 SLOPES WITH BAFFLES

9/21/2021 1:47:25 PM

LAST REVISION	REVISION	DESCRIPTION:				
11/01/21			FY 2022-23 STANDARD PLANS	U-TYPE CONCRETE ENDWALLS BAFFLES & GRATE OPTIONAL 15" TO 30" PIPE	INDEX 430-011	SHEET 2 of 5

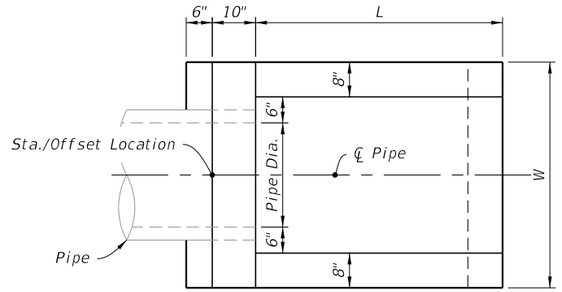

PLAN

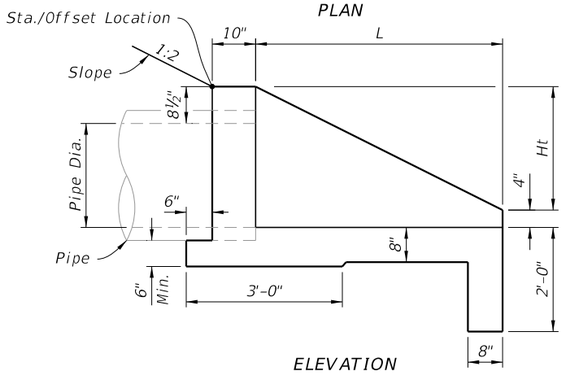

ELEVATION

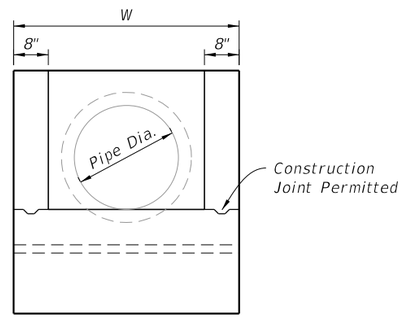

FRONT VIEW

DIMENSIONAL DETAILS

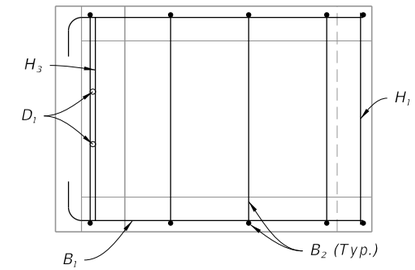

PLAN

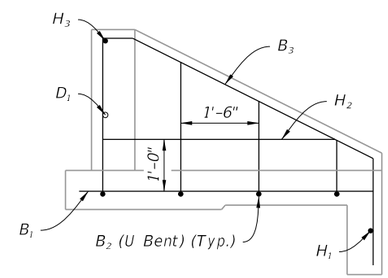

SIDE VIEW

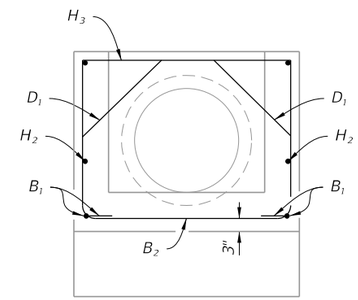

BACKWALL SECTION

REINFORCING DETAILS

LEGEND:

H = Horizontal Bars
V = Vertical Bars
B = Bent Bars
D = Dowels or Diagonal Bars

TABLE-2
DIMENSIONS AND QUANTITIES FOR ONE U-ENDWALL

Pipe		L	Ht	W	Class II Conc. Cu. Yd.	Reinf. Steel lbs.
Dia.	Area Sq. Ft.					
15"	1.23	3'-3"	1'-7½"	3'-7"	0.89	39
18"	1.77	3'-9"	1'-10½"	3'-10"	1.05	43
24"	3.14	4'-9"	2'-4½"	4'-4"	1.40	55
30"	4.91	5'-9"	2'-10½"	4'-10"	1.88	64

ENDWALL WITHOUT BAFFLES

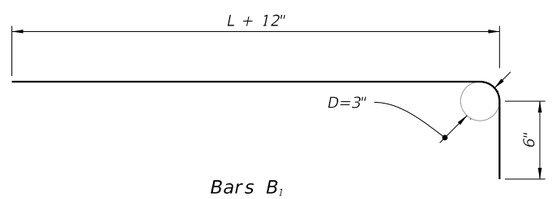

Bars B_1

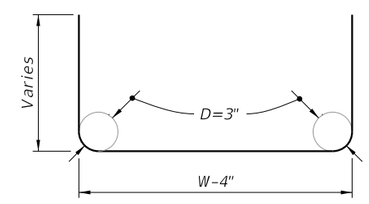

Bars B_2

BENDING DIAGRAM

ENDWALLS FOR 1:2 SLOPES WITHOUT BAFFLES AND BAR BENDING DIAGRAM

NOTE:

1. Reinforcing similar to Sheets 2 and 3.
2. See Sheet 3 for Bar Bending Diagram.

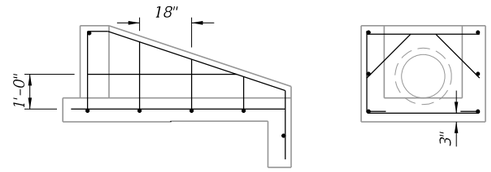

15" AND 18" PIPE

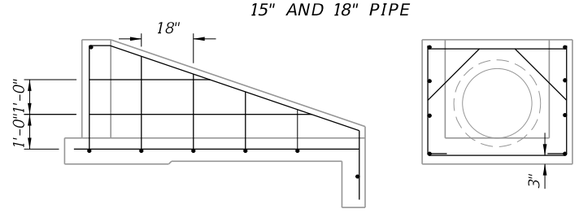

24" AND 30" PIPE

1:3 SLOPES

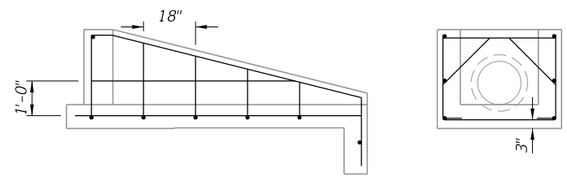

15" AND 18" PIPE

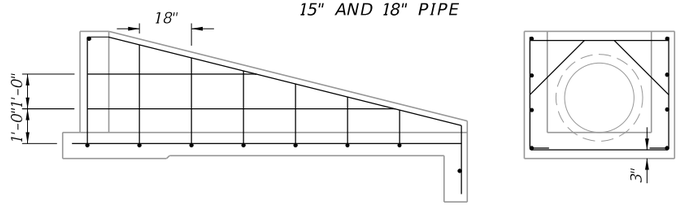

24" AND 30" PIPE

1:4 SLOPES

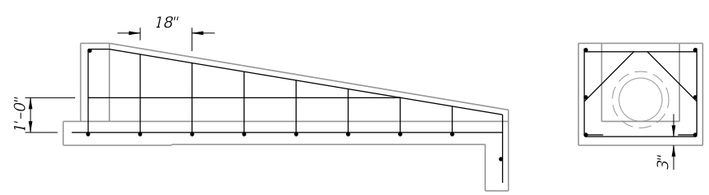

15" AND 18" PIPE

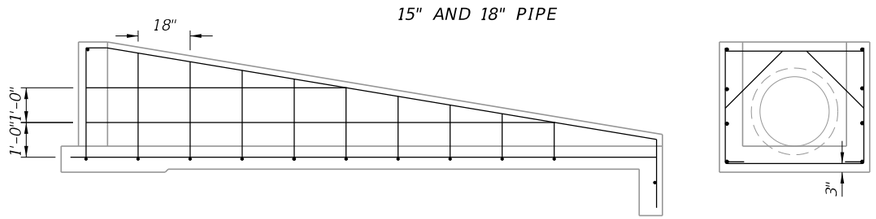

24" AND 30" PIPE

1:6 SLOPES

REINFORCING DETAILS

(Side Views And Backwall Sections Shown)

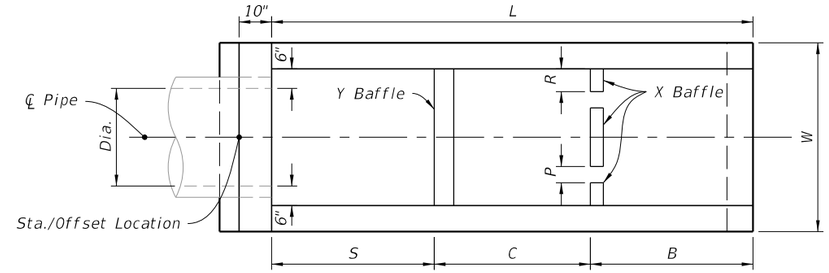

PLAN

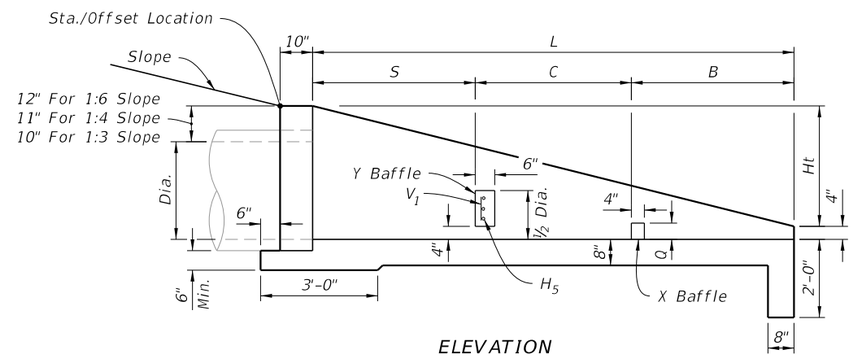

ELEVATION

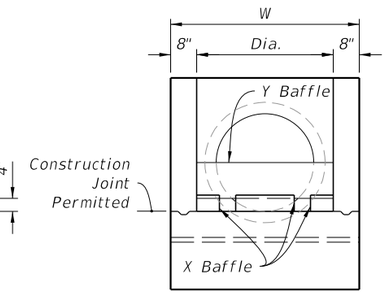

END VIEW

DIMENSIONAL DETAILS

TABLE-3

DIMENSIONS AND QUANTITIES FOR BAFFLES

Pipe Dia.	X Baffle			Y Baffle Reinf. Steel		Class II Concrete Cu. Yd.	Reinf. Steel lbs.
	P Width	Q Height	R Length	Bar V_1	Bar H_5		
15"	4"	4"	4"	2- #4	1- #4	0.10	4
18"	4"	4"	5"	3- #4	2- #4		8
24"	5"	5"	6"	4- #4	3- #4		12
30"	5"	5"	7"	4- #4	4- #4		16

TABLE-4

DIMENSIONS AND QUANTITIES FOR ONE U-ENDWALL

Rate Of Slope	Pipe		L	Ht	W	Baffle Locations (When Required)			Class II Concrete Cu. Yd.	Reinf. Steel lbs.
	Dia.	Area (Sq. Ft.)				S	B	C		
1 : 3	15"	1.23	5'-3"	1'-9"	3'-7"	1'-9"	1'-9"	1'-9"	1.19	51
	18"	1.77	6'-0"	2'-0"	3'-10"	2'-0"	2'-0"	2'-0"	1.42	56
	24"	3.14	7'-6"	2'-6"	4'-4"	2'-6"	2'-6"	2'-6"	1.94	77
	30"	4.91	9'-0"	3'-0"	4'-10"	3'-0"	3'-0"	3'-0"	2.54	96
1 : 4	15"	1.23	7'-4"	1'-10"	3'-7"	2'-6"	2'-6"	2'-4"	1.54	64
	18"	1.77	8'-4"	2'-1"	3'-10"	2'-10"	2'-10"	2'-8"	1.84	71
	24"	3.14	10'-4"	2'-7"	4'-4"	3'-6"	3'-6"	3'-4"	2.53	92
	30"	4.91	12'-4"	3'-1"	4'-10"	4'-2"	4'-2"	4'-0"	3.34	124
1 : 6	15"	1.23	11'-6"	1'-11"	3'-7"	3'-10"	3'-10"	3'-10"	2.19	89
	18"	1.77	13'-0"	2'-2"	3'-10"	4'-4"	4'-4"	4'-4"	2.63	103
	24"	3.14	16'-0"	2'-8"	4'-4"	5'-4"	5'-4"	5'-4"	3.59	143
	30"	4.91	19'-0"	3'-2"	4'-10"	6'-4"	6'-4"	6'-4"	4.81	180

ENDWALLS WITH AND WITHOUT BAFFLES FOR 1:3, 1:4, AND 1:6 SLOPES

TABLE-5
TABLE OF DIMENSIONS AND QUANTITIES FOR ONE GRATE

Rate of Slope	Size Dia.	G	2 Each Bars @ 3.4 lb/ft			(X) Channels @ 5.4 lb/ft			2 Angles @ 3.62 lb/ft		Total Weight (lb)
			L	W-4"	lbs	(X)	F	lbs	P	lb	
1:3	15"	2' -8½"	4'-3"	3'-3"	51	3	2' -6⅞"	42	2'-4"	17	110
	18"	2' -11½"	5'-3"	3'-6"	60	4	2' -9⅞"	61	3'-4"	24	145
	24"	3' -5½"	6'-3"	4'-0"	70	5	3' -3⅞"	90	4'-4"	31	191
	30"	3' -11½"	8'-3"	4'-6"	87	7	3' -9⅞"	145	6'-4"	46	278
1:4	15"	2' -8½"	6'-3"	3'-3"	65	5	2' -6⅞"	70	4'-4"	32	167
	18"	2' -11½"	7'-3"	3'-6"	73	6	2' -9⅞"	92	5'-4"	39	204
	24"	3' -5½"	9'-3"	4'-0"	90	8	3' -3⅞"	144	7'-4"	53	287
	30"	3' -11½"	11'-3"	4'-6"	107	10	3' -9⅞"	206	9'-4"	68	381
1:6	15"	2' -8½"	9'-3"	3'-3"	85	8	2' -6⅞"	111	7'-4"	53	249
	18"	2' -11½"	10'-3"	3'-6"	94	9	2' -9⅞"	137	8'-4"	62	292
	24"	3' -5½"	13'-3"	4'-0"	117	12	3' -3⅞"	215	11'-4"	82	414
	30"	3' -11½"	16'-3"	4'-6"	141	15	3' -9⅞"	310	14'-4"	104	555

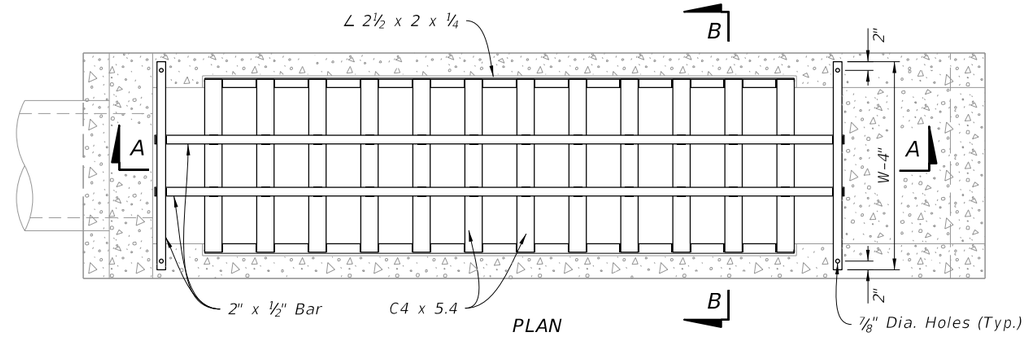

PLAN

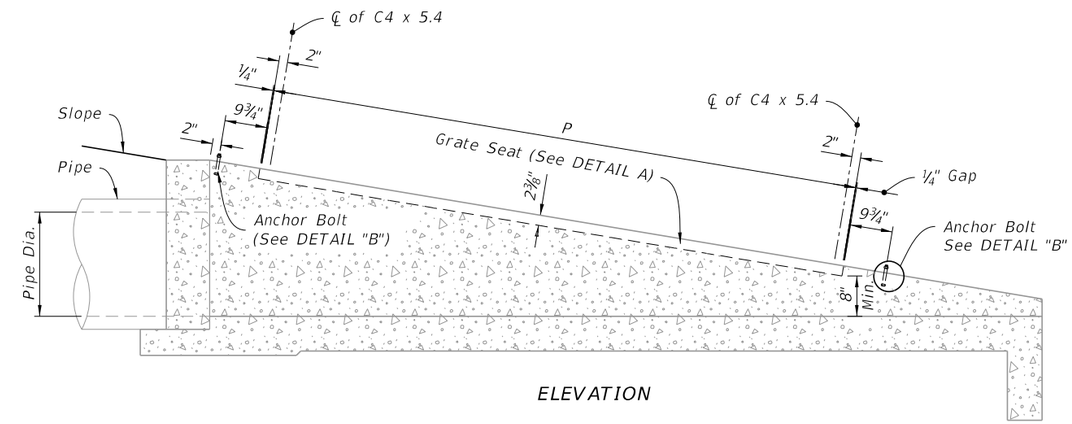

ELEVATION

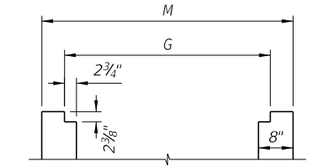

Grate Seat

DETAIL "A"

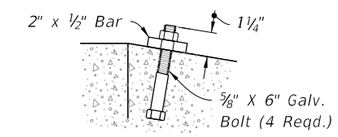

Anchor Bolt Detail

DETAIL "B"

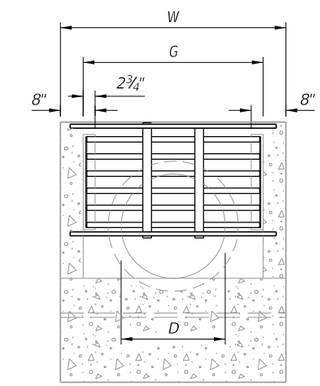

END VIEW

STEEL GRATE MOUNTING

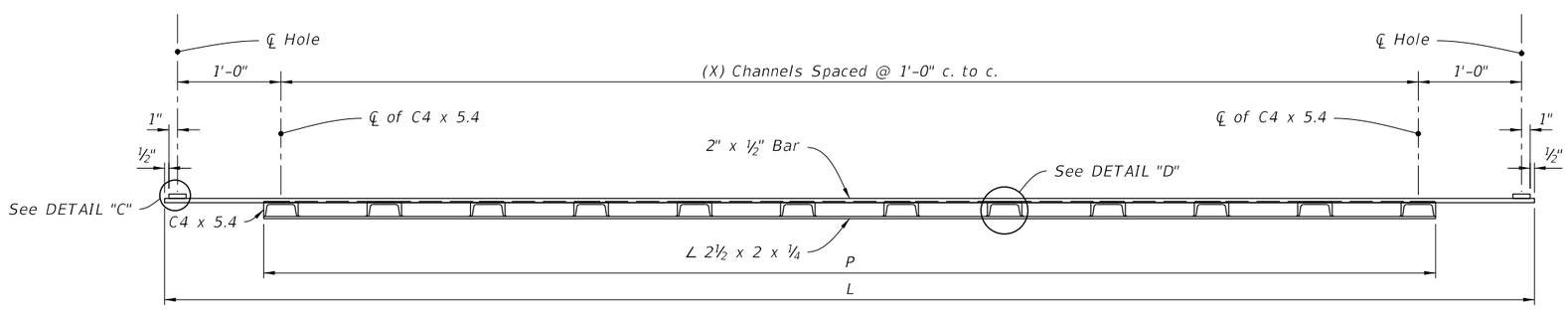

SECTION A-A

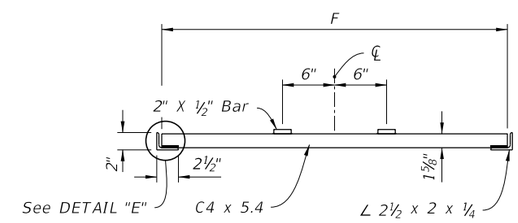

SECTION B-B

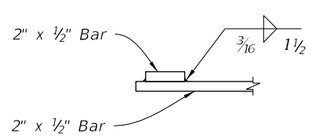

Bar to Bar Weld

DETAIL "C"

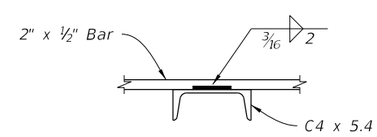

Bar to Channel Weld

DETAIL "D"

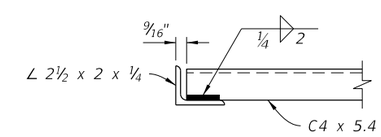

Channel to Angle Weld

DETAIL "E"

STEEL GRATE DETAILS

STEEL GRATE OPTION

9/21/2021 1:47:28 PM

LAST REVISION	REVISION	DESCRIPTION:				
11/01/21			FDOT FY 2022-23 STANDARD PLANS	U-TYPE CONCRETE ENDWALLS BAFFLES & GRATE OPTIONAL 15" TO 30" PIPE	INDEX 430-011	SHEET 5 of 5

GENERAL NOTES:

1. Use Class II concrete.
2. Chamfer all exposed edges ¾".
3. See Index 550-002 for details of Type B fencing.
4. Quantities shown are for estimating purposes only.

TABLE OF CONTENTS:

Sheet	Description
1	General Notes and Contents
2	Dimensional Details
3	Reinforcing Details and Bending Diagram

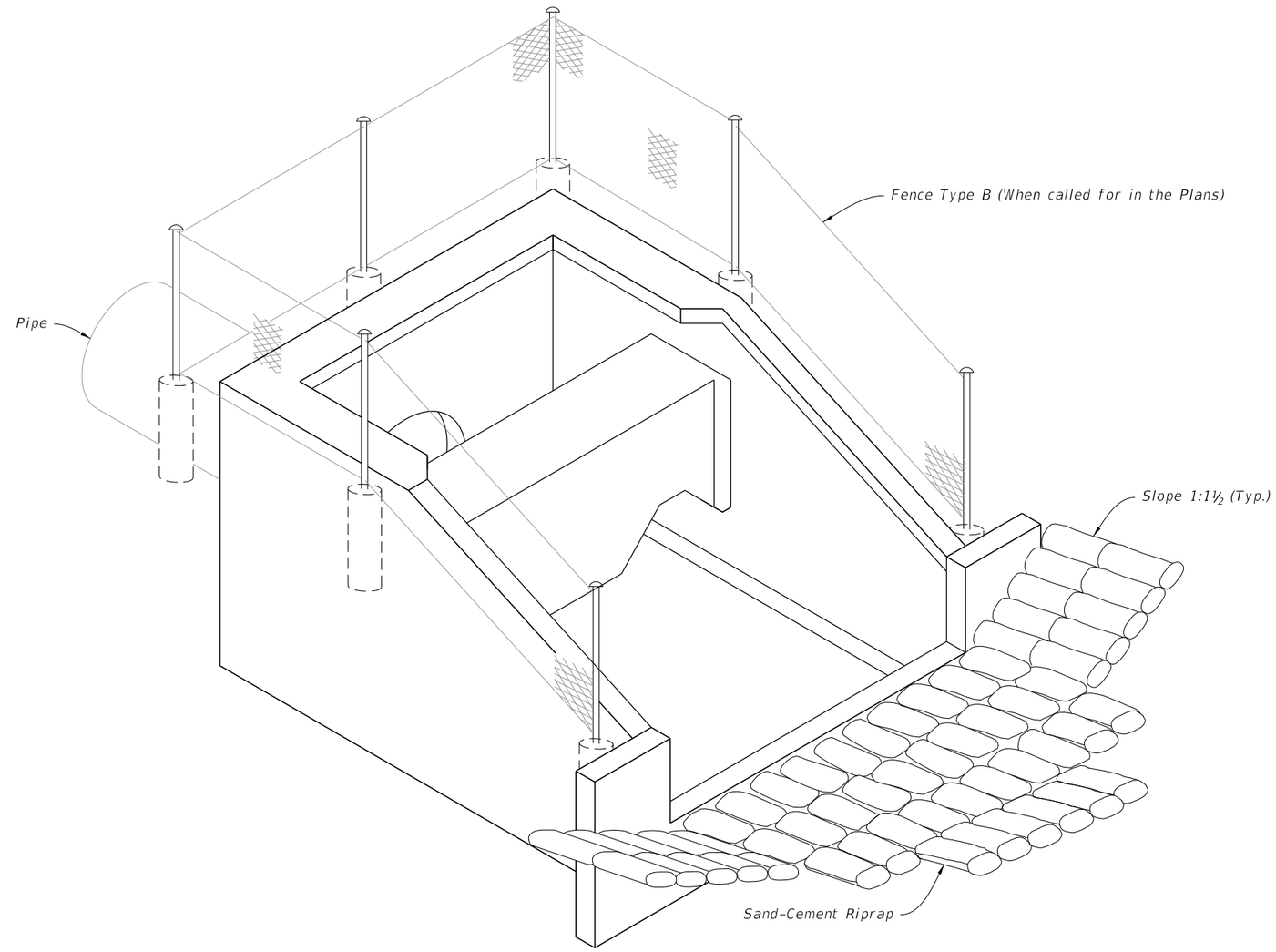

U-TYPE CONCRETE ENDWALLS

9/21/2021 1:47:29 PM

LAST REVISION	REVISION	DESCRIPTION:				INDEX	SHEET
11/01/21			FDOT	FY 2022-23 STANDARD PLANS	U-TYPE CONCRETE ENDWALL ENERGY DISSIPATOR 30" TO 72" PIPE	430-012	1 of 3

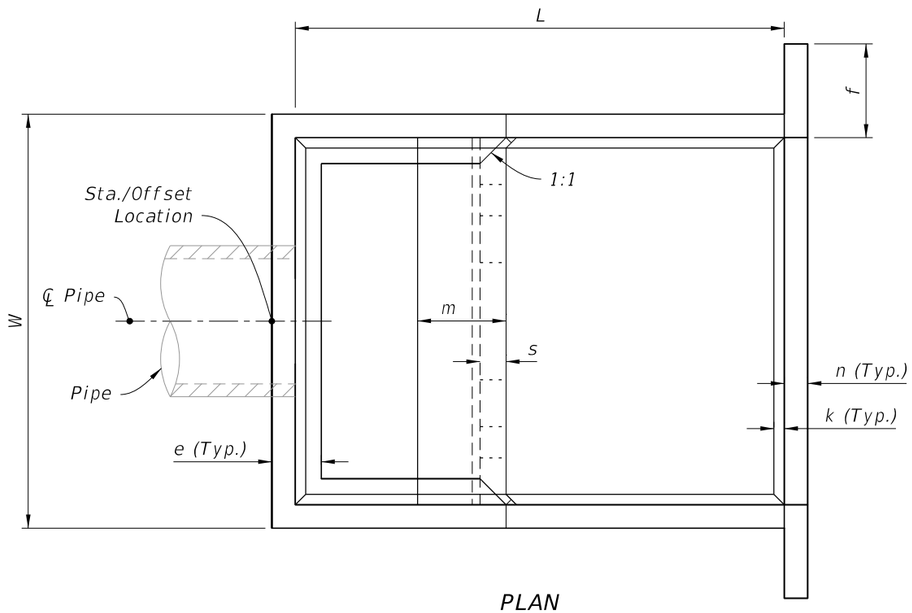

PLAN

Pipe		DIMENSION TABLE																Concrete (CY)	Reinf. Steel (lb)	Sand-Cement Riprap (Nom.) (CY)
Dia.	Area (SF)	Feet - Inches											Inches							
		W	Ht	L	a	b	c	d	e	f	g	m	n	p	s	t	k			
30"	4.91	9-0	6-3	10-8	4-7	6-1	3-4	1-4	1-2	2-6	3-0	1-11	6	6½	7	7	3	6.72	736	10.6
36"	7.07	10-5	7-3	12-4	5-3	7-1	3-10	1-7	1-3	3-0	3-6	2-3	7	7½	8	8	3	10.34	1,072	13.6
42"	9.62	11-10	8-0	14-0	6-0	8-0	4-5	1-9	1-6	3-0	3-11	2-6	8	8½	9	8	4	14.82	1,429	17.5
48"	12.57	13-3	9-0	15-8	6-9	8-11	4-11	2-0	1-7	3-0	4-5	2-10	9	9½	10	8	4	20.36	2,000	22.1
54"	15.90	14-8	9-9	17-4	7-4	10-0	5-5	2-2	1-10	3-0	4-11	3-0	10	10½	10	8	4	27.19	2,659	27.2
60"	13.63	16-1	10-9	19-0	8-0	11-0	5-11	2-5	1-11	3-0	5-4	3-4	11	11½	11	8	6	34.49	3,552	32.5
66"	23.76	17-3	11-6	20-6	8-8	11-10	6-5	2-7	2-1	3-0	5-9	3-7	12	12½	12	8	6	42.82	4,472	38.3
72"	28.27	18-6	12-3	22-0	9-3	12-9	6-11	2-9	2-3	3-0	6-2	3-9	12	12½	12	8	6	50.68	5,426	44.5

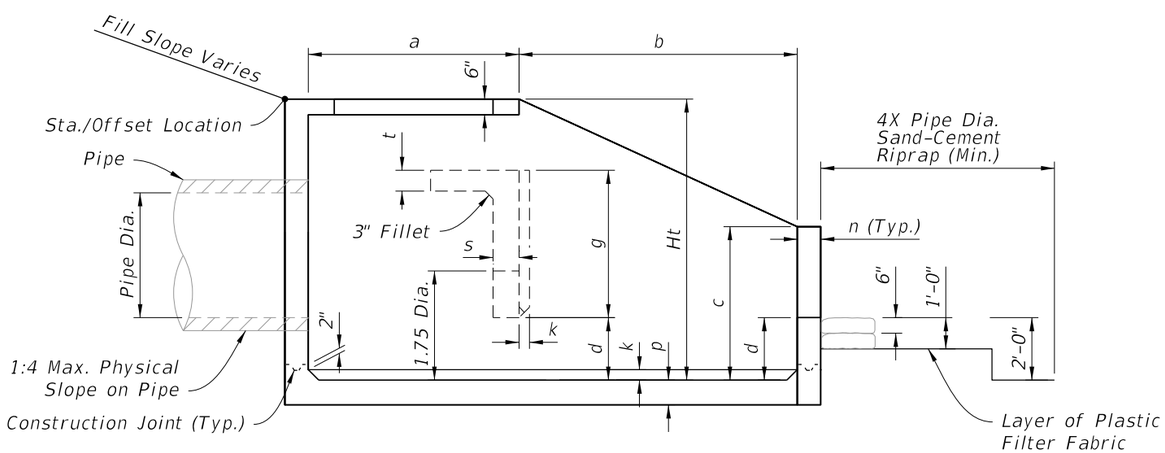

ELEVATION

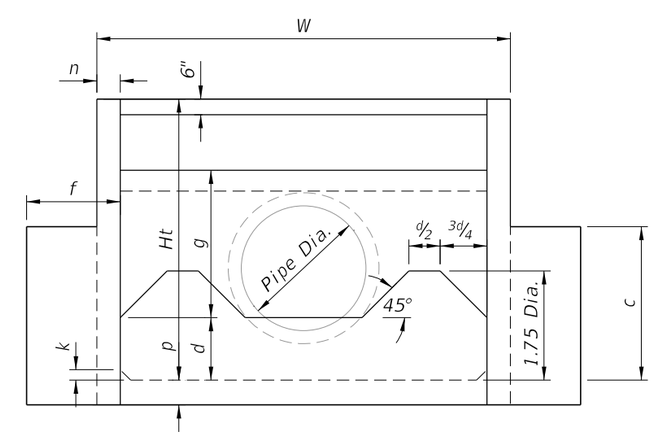

FRONT VIEW

DIMENSIONAL DETAILS

DIMENSIONAL DETAILS

LAST REVISION	REVISION	DESCRIPTION:					
11/01/19			FY 2022-23 STANDARD PLANS	U-TYPE CONCRETE ENDWALL ENERGY DISSIPATOR 30" TO 72" PIPE	INDEX 430-012	SHEET 2 of 3

9/21/2021 1:47:29 PM

NOTES:

1. All bar dimensions are measured out to out.
2. All Bars are size #4 unless otherwise noted.
3. Install reinforcing steel with a minimum of 2" cover.
4. Bars B6 and B7 (N.S. and F.S.) equivalent in size to B_5 (cut and bend as required)
5. Bars V_1, V_2, V_3, V_4, V_5, H_1, H_2, H_3, H_4, and H_5 are straight bars.

LEGEND:

H = Horizontal Bars
V = Vertical Bars
B = Bent Bars
D = Dowels or Diagonal Bars

BENT BARS TABLE

Pipe	B_1		B_2		B_3		B_4		B_5		B_{10}	
	Size (No.)	Spacing (Ft.-In.)	Size (No.)	Spacing (Ft.-In.)	Size (No.)	Spacing (Ft.-In.)	Size (No.)	Spacing (Ft.-In.)	Size (No.)	Spacing (Ft.-In.)	Size (No.)	Spacing (Ft.-In.)
30"	4	0-9½	4	1-6	5	0-11	4	0-9½	5	0-5½	4	0-9½
36"	5	1-0	4	1-6	5	0-10	5	1-0	5	0-5	5	1-0
42"	5	0-11	4	1-6	6	1-1	5	0-11	6	0-6½	5	0-11
48"	5	0-9½	4	1-0	6	1-0	5	0-9½	6	0-6	5	0-9½
54"	5	0-8½	4	0-10	7	1-1	5	0-8½	7	0-6½	5	0-8½
60"	6	0-10	5	1-1	7	1-0	6	0-10	7	0-6	6	0-10
66"	6	0-8½	5	0-11½	7	0-11	6	0-8½	7	0-5½	6	0-8½
72"	6	0-7½	5	0-10	7	0-10	6	0-7½	7	0-5	6	0-7½

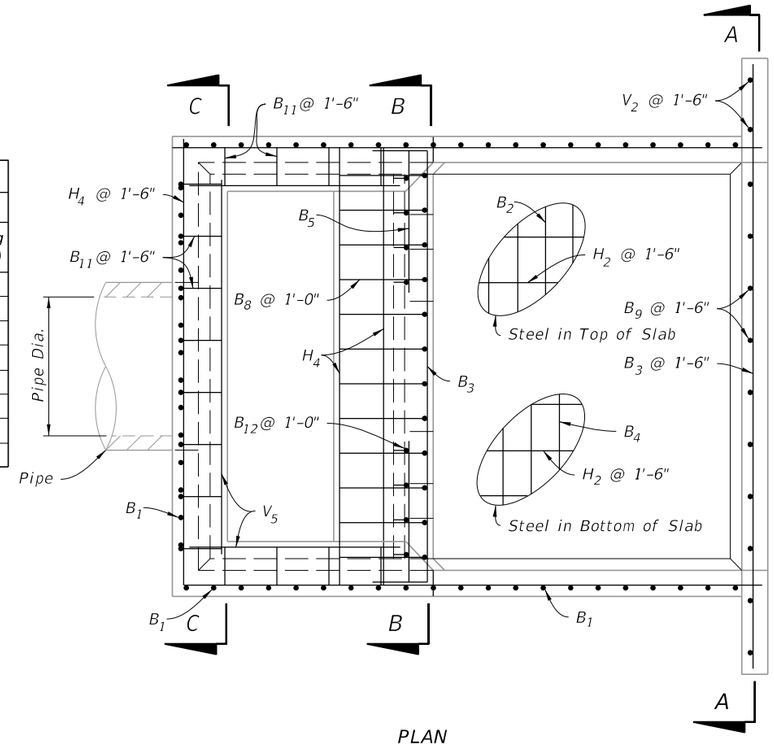

PLAN

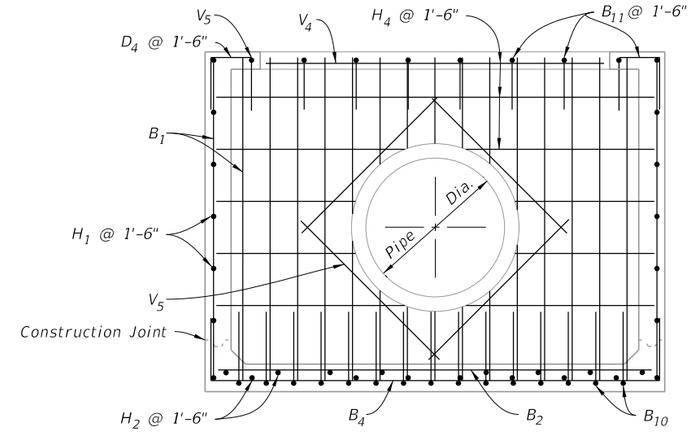

SECTION C-C

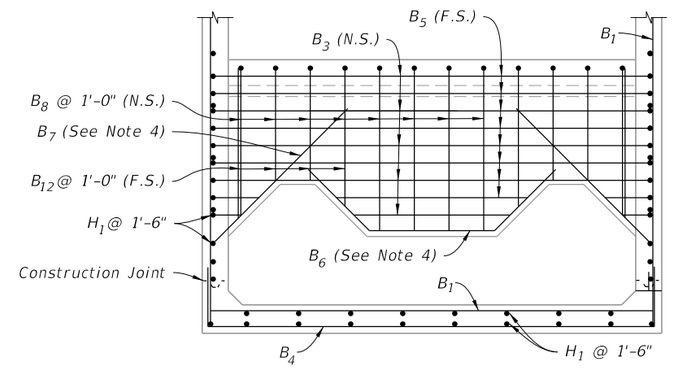

SECTION B-B

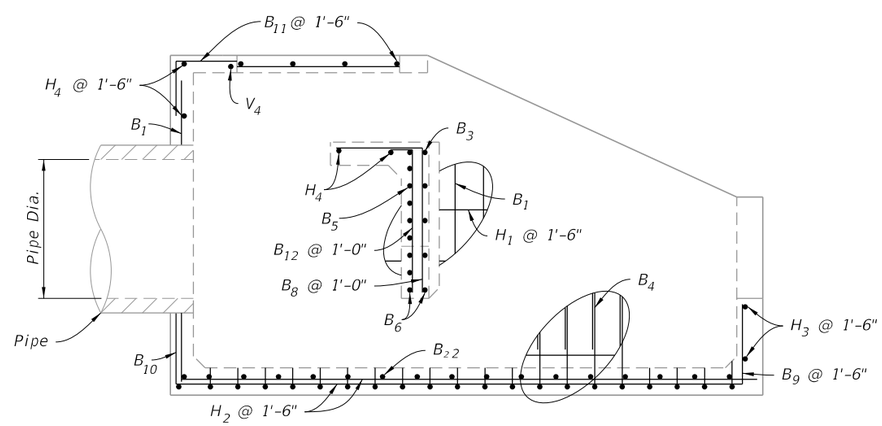

ELEVATION

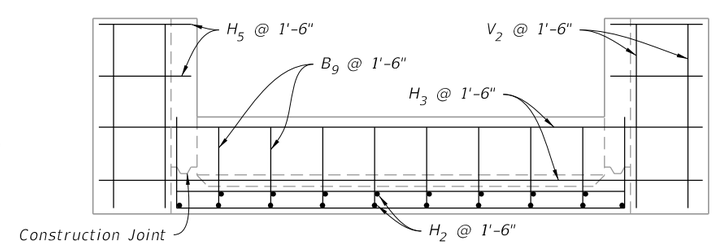

SECTION A-A

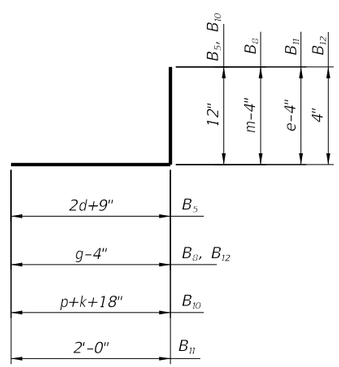

BARS B_5 B_8 B_{10} B_{11} B_{12}

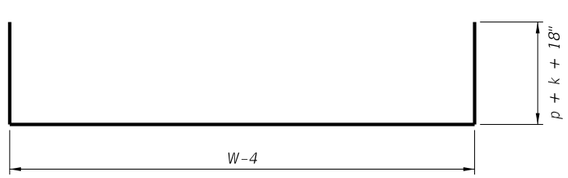

BAR B_4

BENDING DIAGRAM

REINFORCING DETAILS

REINFORCING DETAILS AND BENDING DIAGRAM

LAST REVISION	REVISION	DESCRIPTION:			INDEX	SHEET
11/01/19			FY 2022-23 STANDARD PLANS	U-TYPE CONCRETE ENDWALL ENERGY DISSIPATOR 30" TO 72" PIPE	430-012	3 of 3

9/21/2021 1:47:30 PM

GENERAL NOTES:

1. Provide flared end sections meeting the requirements of ASTM C76 with the exception that dimensions and reinforcement meet the criteria in the table on sheet 2. Circumferential reinforcement may consist of either one cage or two cages of steel. Use concrete compressive strength of 4000 psi.

2. Connections between the flared end section and the pipe culvert may be any of the following types unless otherwise shown on the plans.

   a. Joints meeting the requirements of Section 449 of the Standard Specifications (O-Ring Gasket). Flared end section joint dimensions and tolerances shall be identical or compatible to those used in the pipe culvert joint. When pipe culvert and flared end section manufacturers are different, the manufacturer of the flared end sections must certify the compatibility of joint designs.

   b. Joints sealed with preformed plastic gaskets. Use gaskets that meet the requirements Specification 942-2 of the Standard Specifications and the minimum sizes for gaskets as specified for equivalent sizes of elliptical pipe.

   c. Reinforced concrete jackets, as detailed on sheet 2. When non-coated corrugated metal pipe is called for in the Plans, use bituminous coated pipe in the jacketed area as specified on Index 430-001. Construct concrete jacket as specified in Index 430-001.

3. Cast Toe Walls in place using Class II Concrete.

4. On skewed pipe culverts place the flared end sections in line with the pipe culvert. Warp the side slopes as required to fit the flared end sections.

5. Quantities shown are for estimating purposes only.

TABLE OF CONTENTS:

Sheet	Description
1	General Notes and Contents
2	Straight Flare, Optional Shape Details, and Reinforced Concrete Jacket Detail

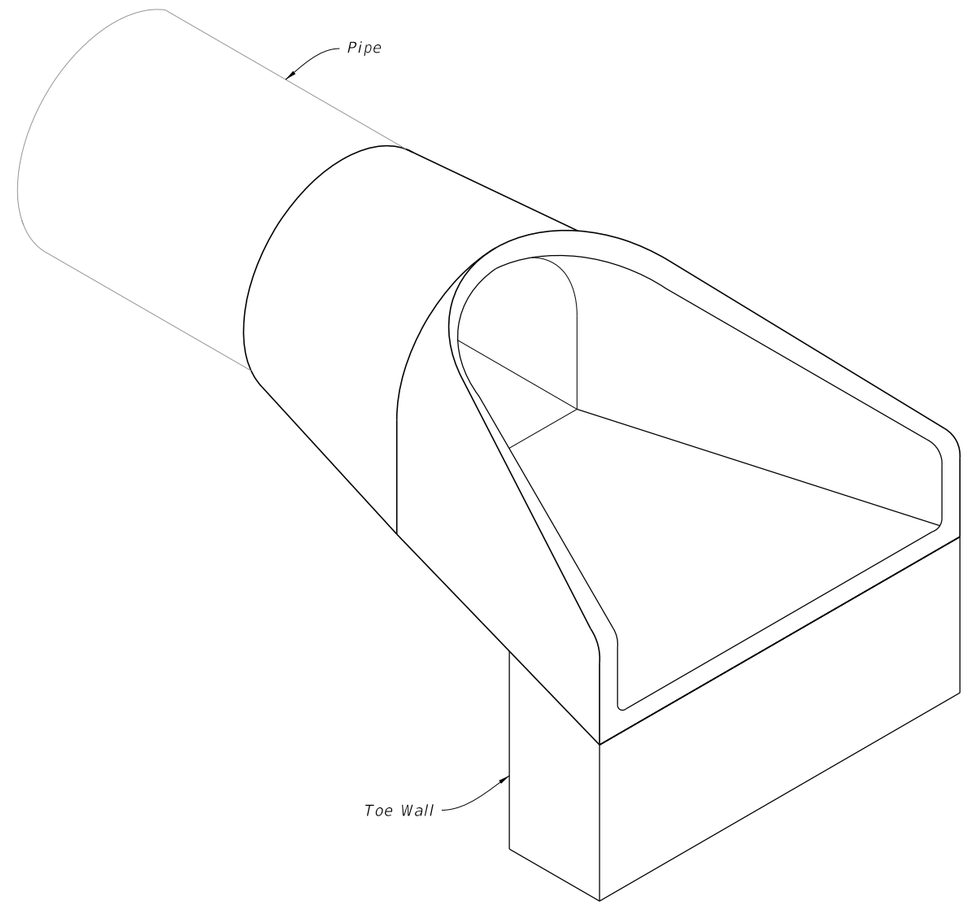

FLARED END SECTION

Pipe Dia.	T	Reinf. sq. in. Per Foot	Bell or Spigot	A	B	C	D	E	P	R 1	R 2	FLAT	h	Toe Wall Class II Conc. (CY.)
12"	2"	0.07	1½"	4"	2'-0"	4'-0⅞"	6'-0⅞"	2'-0"	19 15/16"	10⅛"	9"	3½"	12"	.06
15"	2¼"	0.07	2"	6"	2'-3"	3'-10"	6'-1"	2'-6"	24 5/16"	12½"	11"	3½"	12"	.07
18"	2½"	0.07	2½"	9"	2'-3"	3'-10"	6'-1"	3'-0"	29"	15½"	12"	4"	15"	.11
21"	2¾"	0.07	2¼"	9"	2'-11"	3'-2"	6'-1"	3'-6"	31⅝"	16⅛"	13"	4"	15"	.12
24"	3"	0.07	2½"	9½"	3'-7½"	2'-6"	6'-1½"	4'-0"	33 3/16"	16 13/16"	14"	4½"	18"	.17
27"	3¼"	0.148	2½"	10½"	4'-0"	2'-1½"	6'-1½"	4'-6"	36"	18 9/16"	14½"	4½"	18"	.19
30"	3½"	0.148	3"	1'-0"	4'-6"	1'-7¾"	6'-1¾"	5'-0"	37"	18½"	15"	5"	21"	.24
36"	4"	0.148	3½"	1'-3"	5'-3"	2'-10¾"	8'-1¾"	6'-0"	47 13/16"	24 5/16"	20"	5½"	21"	.29
42"	4½"	0.148	3¾"	1'-9"	5'-3"	2'-11"	8'-2"	6'-6"	53⅞"	27½"	22"	5½"	24"	.36
48"	5"	0.148	4¼"	2'-0"	6'-0"	2'-2"	8'-2"	7'-0"	56½"	28½"	22"	5¾"	24"	.39
54"	5½"	0.174	4¾"	2'-3"	5'-5"	2'-11"	8'-4"	7'-6"	65½"	33⅛"	24"	6¼"	24"	.42
60"	6"	0.174	5"	2'-6"	5'-0"	3'-3"	8'-3"	8'-0"	72½"	36 1/16"	24"	6¾"	24"	.44
66"	6½"	0.174	5½"	2'-0"	6'-6"	1'-9"	8'-3"	8'-6"	72"	36⅛"	24"	7¼"	24"	.47
72"	7"	0.174	6"	2'-0"	6'-6"	1'-9"	8'-3"	9'-0"	77 13/16"	38 15/16"	24"	7¾"	24"	.50

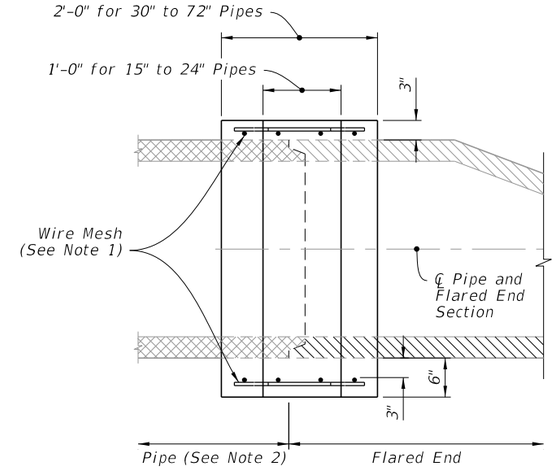

SECTION E-E

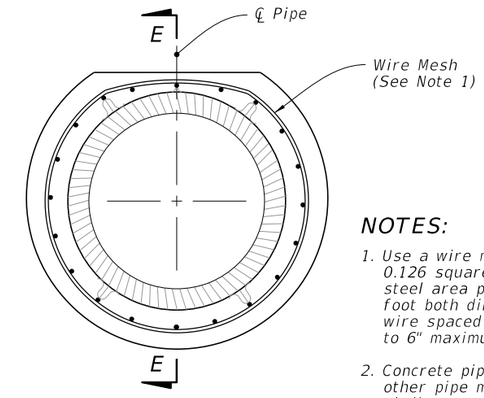

END VIEW

NOTES:

1. Use a wire mesh with 0.126 square inches of steel area per linear foot both directions. Use wire spaced 2" minimum to 6" maximum on centers.
2. Concrete pipe shown, other pipe material similar.

REINFORCED CONCRETE JACKET DETAIL

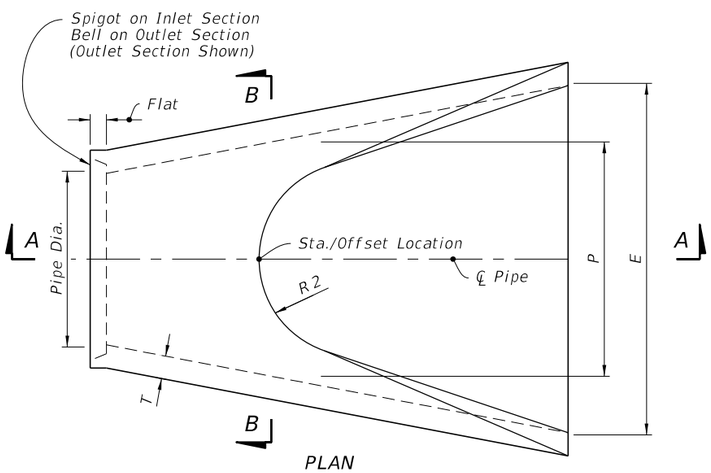

PLAN

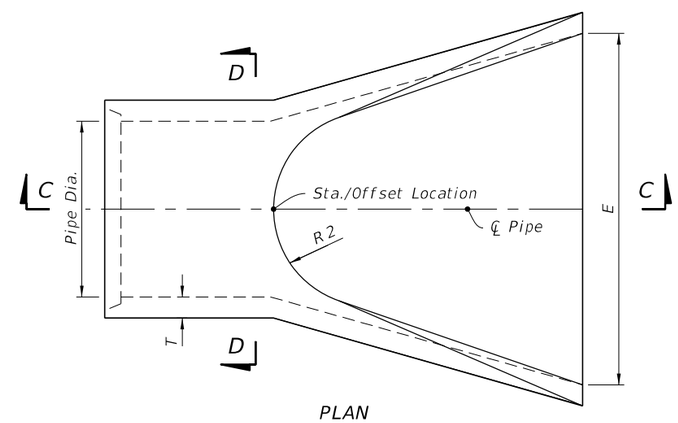

PLAN

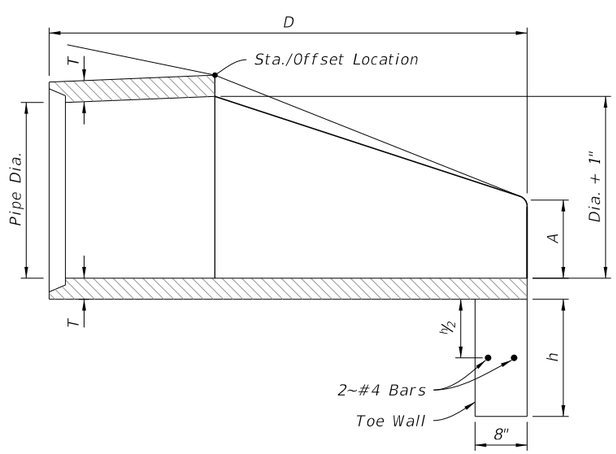

SECTION A-A

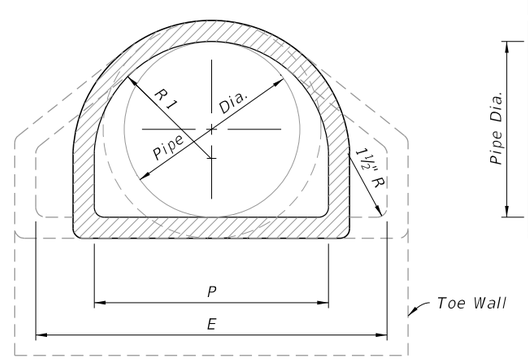

SECTION B-B

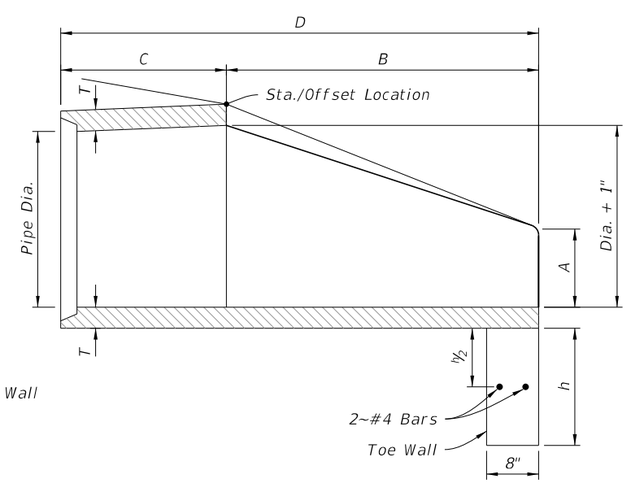

SECTION C-C

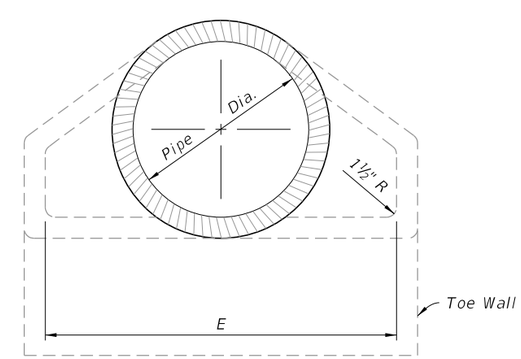

SECTION D-D

STRAIGHT FLARE

OPTIONAL SHAPE

1:47:31 PM

9/21/2021

LAST REVISION	REVISION	DESCRIPTION:			INDEX	SHEET
11/01/21			FY 2022-23 STANDARD PLANS	FLARED END SECTION	430-020	2 of 2

GENERAL NOTES:

1. Unless otherwise designated in the plans, concrete pipe mitered end sections may be used with any type of cross drain pipe; corrugated steel pipe mitered end sections may be used with any type of cross drain pipe except aluminum pipe; and, corrugated aluminum mitered end sections may be used with any type of cross drain pipe except steel pipe. When bituminous coated metal pipe is specified for cross drain pipe, construct the mitered end sections with like pipe or concrete pipe. When the mitered end section pipe is dissimilar to the cross drain pipe, construct a concrete jacket in accordance with Index 430-001.

2. Use either corrugated metal or concrete mitered end sections for corrugated polyethylene pipe (HDPE), polyvinyl-chloride pipe (PVC), steel reinforced polyethylene pipe (SRPE), and polypropylene pipe (PP). When used in conjunction with corrugated mitered end sections, make connection using either a formed metal band specifically designated to join HDPE, PVC, SRPE, or PP pipe, with metal pipe. When used in conjunction with a concrete mitered end sections, construct concrete jacket in accordance with Index 430-001.

3. Class NS concrete cast-in-place reinforced slabs are required for all sizes of cross drain pipes. Construct slabs at 5½" thick, unless 3" thickness is called for in the Plans.

4. Select lengths of concrete pipe that avoid excessive connections in the assembly of the mitered end section.

5. Repair corrugated metal pipe galvanizing that is damaged during beveling and perforating.

6. When existing multiple cross drain pipes are spaced other than the dimensions shown in this Index, have nonparallel axes, or non-uniform sections, either construct the mitered end sections separately as single pipe or collectively as multiple pipe end sections as directed by the Engineer.

7. Saddle Slope:
   - 1:4 Miter - Slope to ℄ of pipe for round pipes less than or equal to 18" diameter and 1:1 for round pipes greater than or equal to 24" diameter.
     Slope to the major axis for elliptical pipes 24"x38" or smaller and 1:2 for pipes 29"x45" or larger.
     Slope to the span line for pipe arch 28"x20" or smaller and 1:2 for pipe arch 35"x24" or larger.
   - 1:2 Miter - Slope to ℄ of pipe for round pipes less than or equal to 18"diameter and 1:2 for round pipes greater than or equal to 24" diameter.
     Slope to the major axis for elliptical pipes 29"x45" or smaller and 1:1 for pipes 34"x53" or larger.
     Slope 1:1 for all pipe arch sizes.

8. Quantities shown are for estimating purposes only.

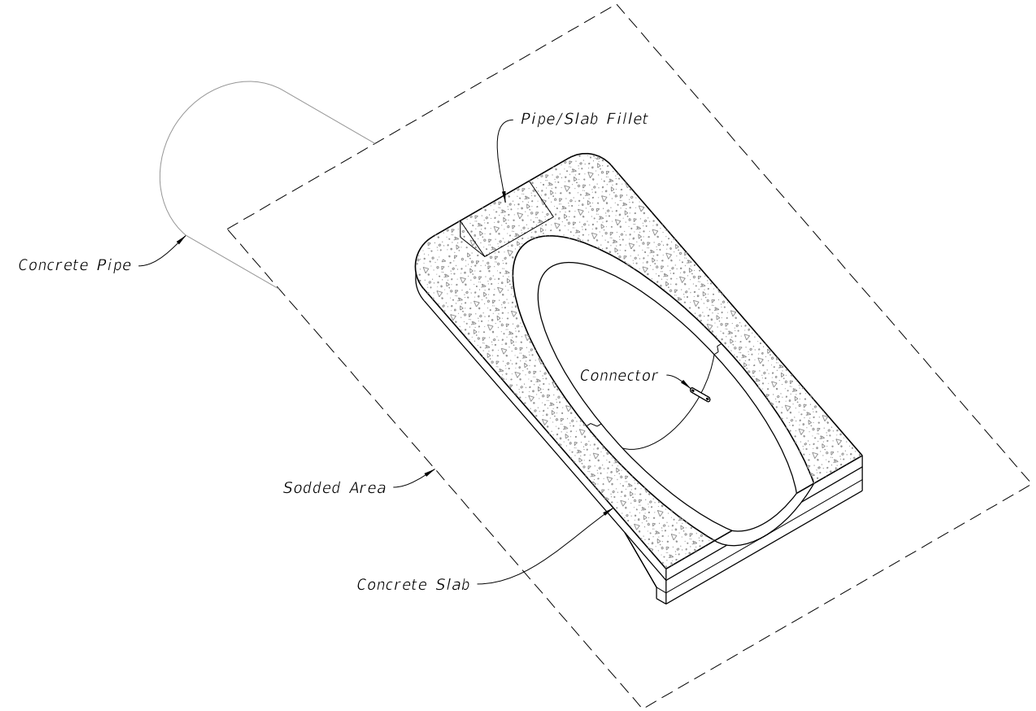

CROSS DRAIN MITERED END SECTION
(Concrete Pipe Shown, Corrugated Metal Pipe Similar)

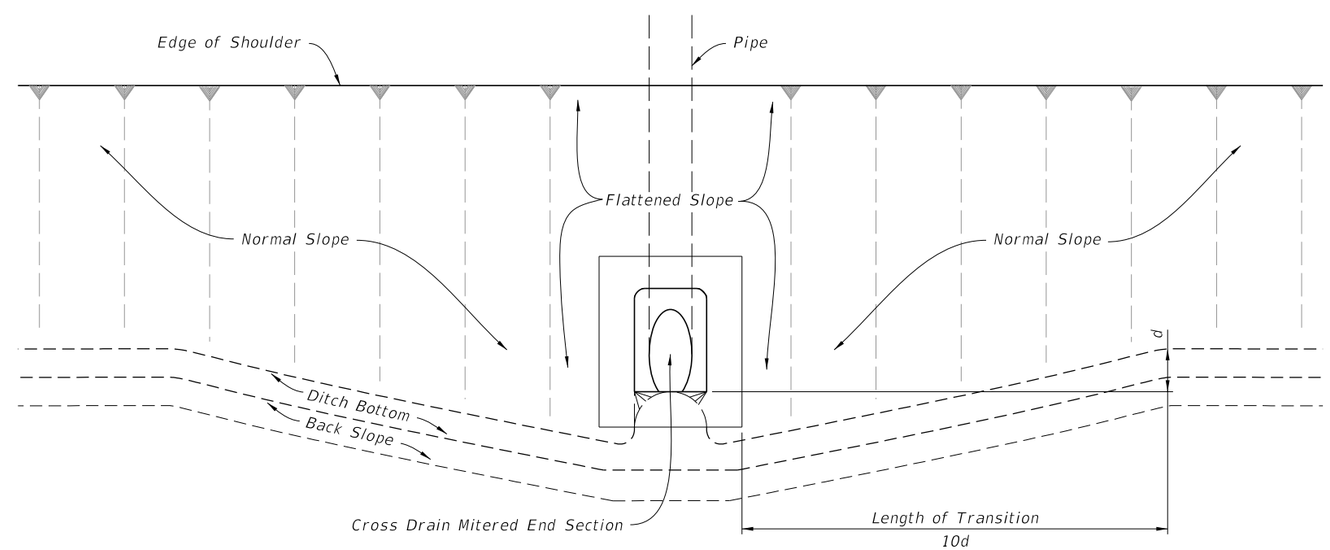

SLOPE AND DITCH TRANSITIONS

TABLE OF CONTENTS:

Sheet	Description
1	General Notes and Contents
2	Single and Multiple Concrete Pipe
3	Concrete Pipe Dimensions and Quantities
4	Single and Multiple Corrugated Metal Pipe
5	Corrugated Metal Pipe Dimensions and Quantities
6	Concrete Pipe Connections and Corrugated Metal Pipe (CMP) Anchor Detail

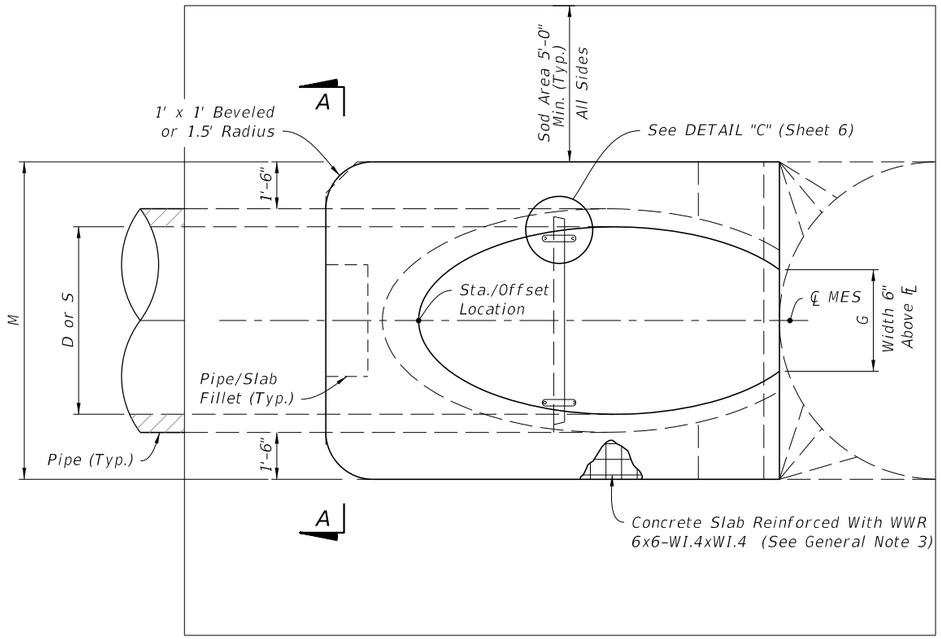

PLAN - SINGLE PIPE

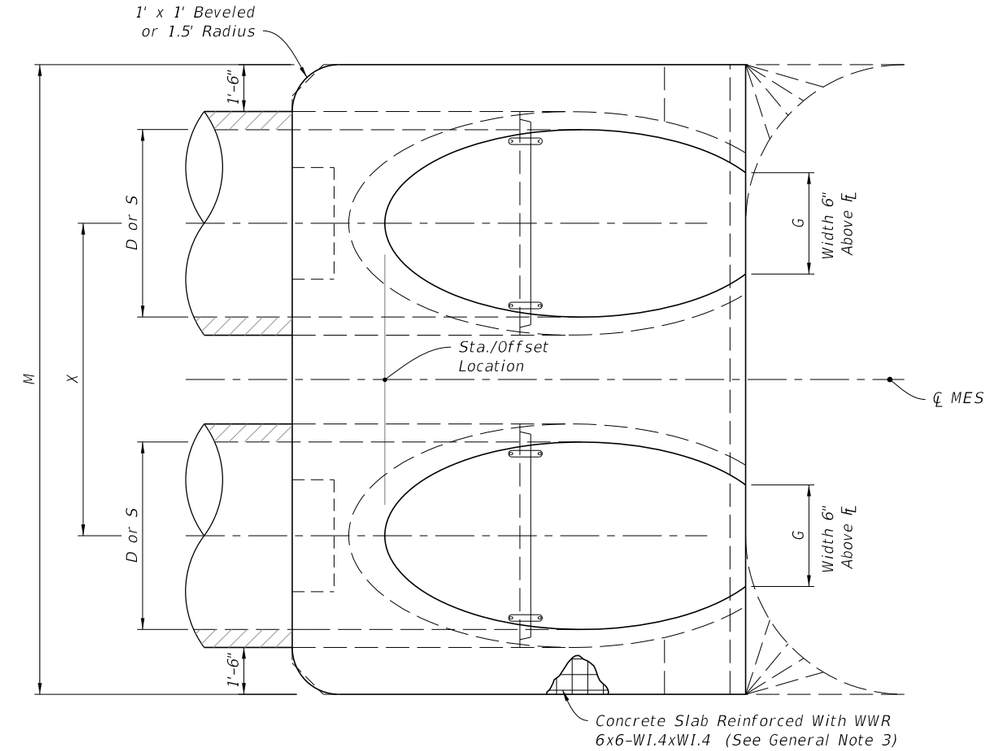

PLAN - MULTIPLE PIPE

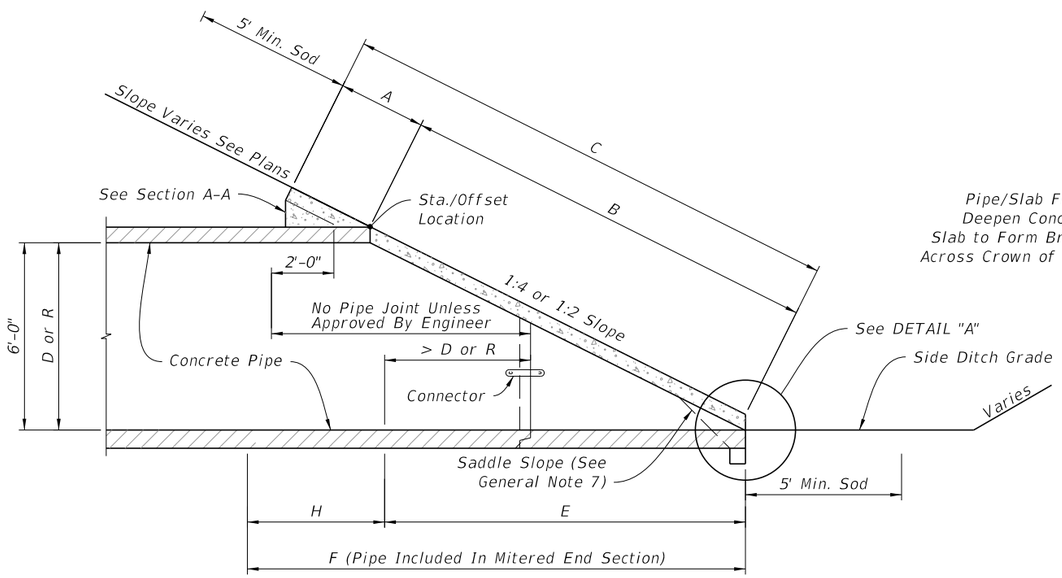

ELEVATION

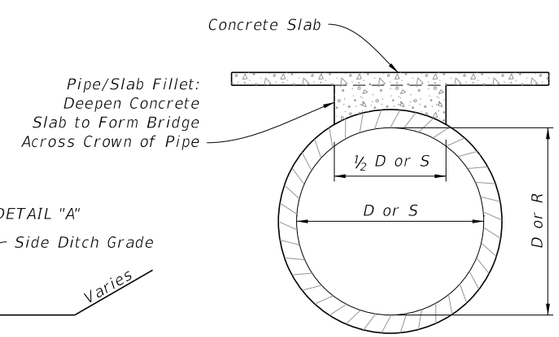

SECTION A-A
(Pipe/Slab Fillet)

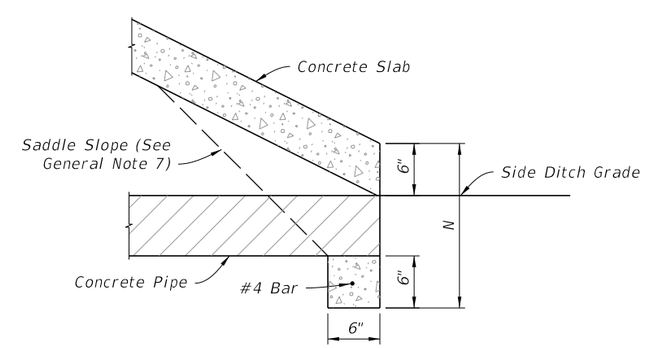

DETAIL "A"

ROUND CONCRETE PIPE
(Elliptical Pipe Similar)

NOTE: See Table 1 on Sheet 3 for Dimensions and Quantities.

SINGLE AND MULTIPLE CONCRETE PIPE

LAST REVISION	REVISION	DESCRIPTION:			INDEX	SHEET
11/01/19			FY 2022-23 STANDARD PLANS	CROSS DRAIN MITERED END SECTION	430-021	2 of 6

9/21/2021 1:47:33 PM

TABLE 1
SINGLE AND MULTIPLE CONCRETE PIPE DIMENSIONS AND QUANTITIES

		Dia. D	Rise R	Span S	X	A	B	C	E	F	G	H	M				N	5½" CONC. SLAB (CY) (See General Note 3)				3" CONC. SLAB (CY) (See General Note 3)				SODDING (SY)			
													Single Pipe	Double Pipe	Triple Pipe	Quad. Pipe		Single Pipe	Double Pipe	Triple Pipe	Quad. Pipe	Single Pipe	Double Pipe	Triple Pipe	Quad. Pipe	Single Pipe	Double Pipe	Triple Pipe	Quad. Pipe
Round Concrete Pipe	1:2 Slope	15"	—	—	2'-7"	1.92'	2.18'	4.10'	2.06'	5'	1.22'	2.9'	4.63'	7.21'	9.79'	12.37'	1.19'	0.38	0.58	0.77	0.96	0.27	0.41	0.54	0.67	21	24	27	30
		18"	—	—	2'-10"	1.97'	2.74'	4.71'	2.56'	6'	1.41'	3.4'	4.92'	7.75'	10.58'	13.42'	1.21'	0.44	0.65	0.87	1.09	0.31	0.45	0.60	0.75	22	25	28	31
		24"	—	—	3'-5"	2.06'	3.85'	5.91'	3.56'	7'	1.73'	3.4'	5.50'	8.92'	12.33'	15.75'	1.25'	0.54	0.83	1.12	1.42	0.39	0.59	0.79	1.00	24	28	32	35
		30"	—	—	4'-3"	2.15'	4.95'	7.10'	4.56'	8'	2.00'	3.4'	6.08'	10.33'	14.58'	18.83'	1.29'	0.66	1.09	1.50	1.91	0.46	0.76	1.04	1.32	26	31	35	40
		36"	—	—	5'-1"	2.25'	6.08'	8.33'	5.56'	9'	2.24'	3.4'	6.67'	11.75'	16.83'	21.92'	1.33'	0.81	1.38	1.95	2.51	0.55	0.94	1.33	1.71	28	34	39	45
		42"	—	—	6'-0"	2.34'	7.21'	9.55'	6.56'	10'	2.45'	3.4'	7.25'	13.25'	19.25'	25.25'	1.38'	0.97	1.70	2.45	3.19	0.66	1.15	1.66	2.15	30	37	43	50
		48"	—	—	6'-9"	2.43'	8.33'	10.76'	7.56'	11'	2.65'	3.4'	7.83'	14.58'	21.33'	28.08'	1.42'	1.13	2.04	2.93	3.84	0.76	1.37	1.96	2.57	32	39	47	54
		54"	—	—	7'-8"	2.52'	9.44'	11.96'	8.56'	12'	2.83'	3.4'	8.42'	16.08'	23.75'	31.42'	1.46'	1.31	2.44	3.58	4.72	0.87	1.62	2.38	3.14	34	42	51	59
		60"	—	—	8'-6"	2.62'	10.56'	13.18'	9.56'	14'	3.00'	4.4'	9.00'	17.50'	26.00'	34.50'	1.50'	1.51	2.89	4.28	5.68	0.99	1.90	2.81	3.73	36	45	55	64
		66"	—	—	9'-2"	2.71'	11.68'	14.39'	10.56'	15'	3.18'	4.4'	9.58'	18.75'	27.92'	37.08'	1.54'	1.68	3.25	4.84	6.43	1.11	2.15	3.21	4.27	38	48	58	68
		72"	—	—	10'-0"	2.80'	12.80'	15.60'	11.56'	16'	3.30'	4.4'	10.16'	20.16'	30.16'	40.16'	1.58'	1.89	3.74	5.59	7.45	1.24	2.46	3.68	4.90	40	51	62	73
	1:4 Slope	15"	—	—	2'-7"	2.27'	4.09'	6.36'	4.03'	8'	1.22'	4.0'	4.63'	7.21'	9.79'	12.37'	1.19'	0.57	0.87	1.15	1.44	0.40	0.61	0.80	1.00	23	26	29	32
		18"	—	—	2'-10"	2.36'	5.12'	7.48'	5.03'	9'	1.41'	4.0'	4.92'	7.75'	10.58'	13.42'	1.21'	0.66	0.99	1.31	1.65	0.47	0.69	0.91	1.14	25	28	31	35
		24"	—	—	3'-5"	2.53'	7.18' △	9.71'	7.03' △	11'	1.73'	4.0'	5.50'	8.92'	12.33'	15.75'	1.25'	0.85	1.30	1.75	2.20	0.60	0.90	1.21	1.52	28	32	36	40
		30"	—	—	4'-3"	2.70'	9.25'	11.95'	9.03'	13'	2.00'	4.0'	6.08'	10.33'	14.58'	18.83'	1.29'	1.10	1.74	2.39	3.05	0.76	1.19	1.63	2.07	31	36	41	46
		36"	—	—	5'-1"	2.87'	11.31' ◇	14.18'	11.03' ◇	15'	2.24'	4.0'	6.67'	11.75'	16.83'	21.92'	1.33'	1.32	2.21	3.08	3.96	0.89	1.48	2.05	2.63	34	40	46	52
		42"	—	—	6'-0"	3.05'	13.37'	16.42'	13.03'	17'	2.45'	4.0'	7.25'	13.25'	19.25'	25.25'	1.38'	1.58	2.76	3.91	5.09	1.05	1.82	2.57	3.34	38	44	51	58
		48"	—	—	6'-9"	3.22'	15.43'	18.65'	15.03'	19'	2.65'	4.0'	7.83'	14.58'	21.33'	28.08'	1.42'	1.85	3.30	4.73	6.17	1.21	2.15	3.07	4.00	41	48	56	63
		54"	—	—	7'-8"	3.39'	17.49'	20.88'	17.03'	21'	2.83'	4.0'	8.42'	16.08'	23.75'	31.42'	1.46'	2.14	3.95	5.77	7.58	1.39	2.55	3.72	4.88	44	52	61	69
		60"	—	—	8'-6"	3.56'	19.55'	23.11'	19.03'	23'	3.00'	4.0'	9.00'	17.50'	26.00'	34.50'	1.50'	2.45	4.66	6.87	9.07	1.59	3.02	4.44	5.86	47	56	66	75
		66"	—	—	9'-2"	3.73'	21.62'	25.35'	21.03'	25'	3.18'	4.0'	9.58'	18.75'	27.92'	37.08'	1.54'	2.88	5.54	8.18	10.84	1.91	3.66	5.40	7.15	49	59	69	80
		72"	—	—	10'-0"	3.91'	23.68'	27.59'	23.03'	27'	3.30'	4.0'	10.16'	20.16'	30.16'	40.16'	1.58'	3.54	6.61	9.87	13.13	2.12	4.18	6.24	8.30	52	63	74	85
Elliptical Concrete Pipe	1:2 Slope	—	12"	18"	2'-10"	1.97'	1.62'	3.59'	1.56'	4'	1.50'	2.4'	4.92'	7.75'	10.58'	13.42'	1.21'	0.30	0.49	0.67	0.85	0.19	0.33	0.45	0.57	21	24	27	30
		—	14"	23"	3'-4"	2.01'	1.99'	4.00'	1.89'	5'	1.90'	3.1'	5.38'	8.71'	12.04'	15.38'	1.23'	0.37	0.59	0.81	1.02	0.25	0.40	0.55	0.69	22	26	29	33
		—	19"	30"	4'-0"	2.11'	2.92'	5.03'	2.73'	6'	2.37'	3.3'	6.04'	10.04'	14.04'	18.04'	1.27'	0.50	0.80	1.09	1.39	0.34	0.55	0.75	0.95	24	28	33	37
		—	24"	38"	5'-0"	2.20'	3.85'	6.05'	3.56'	7'	2.85'	3.4'	6.79'	11.79'	16.79'	21.79'	1.31'	0.62	1.03	1.45	1.86	0.43	0.71	1.00	1.28	26	31	37	42
		—	29"	45"	5'-11"	2.34'	4.79'	7.13'	4.39'	8'	3.19'	3.6'	7.50'	13.42'	19.33'	25.25'	1.38'	0.75	1.30	1.84	2.39	0.52	0.90	1.27	1.65	28	34	41	47
		—	34"	53"	7'-0"	2.43'	5.72'	8.15'	5.23'	9'	3.57'	3.8'	8.25'	15.25'	22.25'	29.25'	1.42'	0.90	1.61	2.32	3.03	0.62	1.11	1.60	2.09	30	37	45	53
		—	38"	60"	7'-10"	2.52'	6.46'	8.98'	5.89'	9'	3.95'	3.1'	8.92'	16.75'	24.58'	32.42'	1.46'	1.03	1.89	2.74	3.60	0.70	1.29	1.87	2.46	31	40	49	57
		—	43"	68"	8'-11"	2.62'	7.39'	10.01'	6.73'	10'	4.28'	3.3'	9.67'	18.58'	27.50'	36.42'	1.50'	1.19	2.26	3.33	4.40	0.81	1.54	2.26	2.99	33	43	53	63
		—	48"	76"	9'-11"	2.71'	8.33'	11.04'	7.56'	11'	4.59'	3.4'	10.42'	20.33'	30.25'	40.17'	1.54'	1.38	2.65	3.93	5.21	0.93	1.79	2.66	3.53	35	46	57	68
		—	53"	83"	10'-8"	2.80'	9.26'	12.06'	8.39'	12'	4.77'	3.6'	11.08'	21.75'	32.42'	43.08'	1.58'	1.55	3.03	4.50	5.96	1.04	2.04	3.03	4.02	37	49	61	73
		—	58"	91"	11'-8"	2.90'	10.19'	13.09'	9.23'	13'	5.01'	3.8'	11.83'	23.50'	35.17'	46.83'	1.63'	1.75	3.47	5.20	6.93	1.17	2.33	3.49	4.66	39	52	65	78
	1:4 Slope	—	12"	18"	2'-10"	2.36'	3.06'	5.42'	3.03'	5'	1.50'	2.0'	4.92'	7.75'	10.58'	13.42'	1.21'	0.45	0.68	0.92	1.14	0.30	0.45	0.61	0.76	23	26	29	32
		—	14"	23"	3'-4"	2.44'	3.75'	6.19'	3.70'	6'	1.90'	2.3'	5.38'	8.71'	12.04'	15.38'	1.23'	0.53	0.83	1.13	1.42	0.36	0.56	0.76	0.95	24	28	32	35
		—	19"	30"	4'-0"	2.62'	5.47'	8.09'	5.36'	8'	2.37'	2.6'	6.04'	10.04'	14.04'	18.04'	1.27'	0.74	1.15	1.57	1.98	0.51	0.79	1.08	1.36	27	32	36	40
		—	24"	38"	5'-0"	2.79'	7.18'	9.97'	7.03'	10'	2.85'	3.0'	6.79'	11.79'	16.79'	21.79'	1.31'	0.97	1.57	2.19	2.81	0.68	1.10	1.53	1.96	30	36	41	47
		—	29"	45"	5'-11"	3.05'	8.90'	11.95'	8.70'	12'	3.19'	3.3'	7.50'	13.42'	19.33'	25.25'	1.38'	1.22	2.07	2.92	3.77	0.86	1.45	2.04	2.63	33	40	46	53
		—	34"	53"	7'-0"	3.22'	10.62'	13.84'	10.36'	13'	3.57'	2.6'	8.25'	15.25'	22.25'	29.25'	1.42'	1.48	2.62	3.77	4.92	1.02	1.81	2.60	3.39	36	44	52	59
		—	38"	60"	7'-10"	3.39'	11.99'	15.38'	11.70'	15'	3.95'	3.3'	8.92'	16.75'	24.58'	32.42'	1.46'	1.72	3.12	4.53	5.92	1.18	2.14	3.10	4.05	38	47	56	65
		—	43"	68"	8'-11"	3.56'	13.71'	17.27'	13.36'	17'	4.28'	3.6'	9.67'	18.58'	27.50'	36.42'	1.50'	2.02	3.78	5.56	7.32	1.38	2.58	3.79	4.99	41	51	61	71
		—	48"	76"	9'-11"	3.73'	15.43'	19.16'	15.03'	19'	4.59'	4.0'	10.42'	20.33'	30.25'	40.17'	1.54'	2.34	4.49	6.64	8.79	1.59	3.05	4.51	5.97	44	55	66	77
		—	53"	83"	10'-8"	3.91'	17.15'	21.06'	16.70'	20'	4.77'	3.3'	11.08'	21.75'	32.42'	43.08'	1.58'	2.66	5.17	7.66	10.16	1.80	3.50	5.19	6.88	47	59	71	83
		—	58"	91"	11'-8"	4.08'	18.87'	22.95'	18.36'	22'	5.01'	3.6'	11.83'	23.50'	35.17'	46.83'	1.63'	3.02	5.98	8.95	11.90	2.04	4.04	6.05	8.05	50	63	76	89

B	E	
△ 6.42'	△ 6.25'	Dimensions permitted to allow use of 8' standard pipe lengths.
◇ 10.40'	◇ 10.10'	Dimensions permitted to allow use of 12' standard pipe lengths.

9/21/2021 1:47:34 PM

CONCRETE PIPE DIMENSIONS AND QUANTITIES

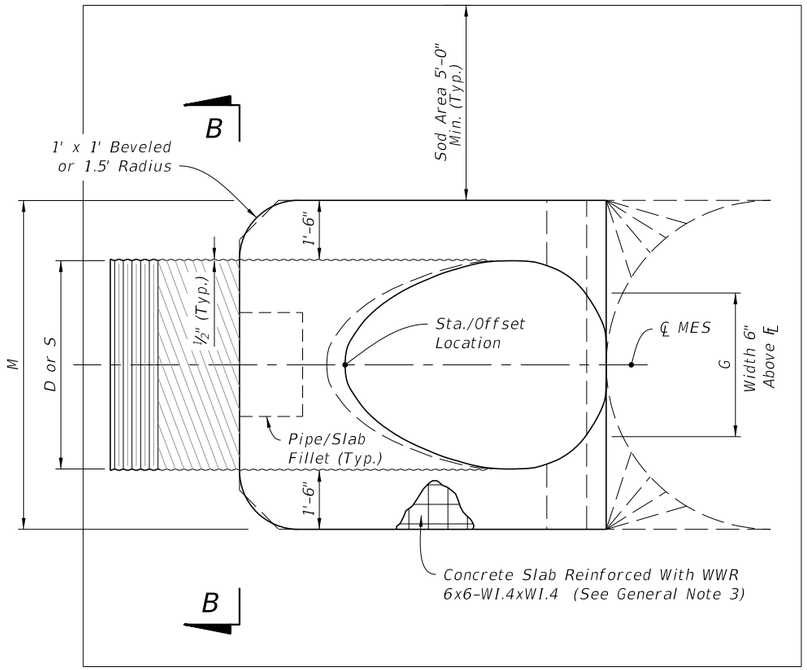

PLAN - SINGLE PIPE

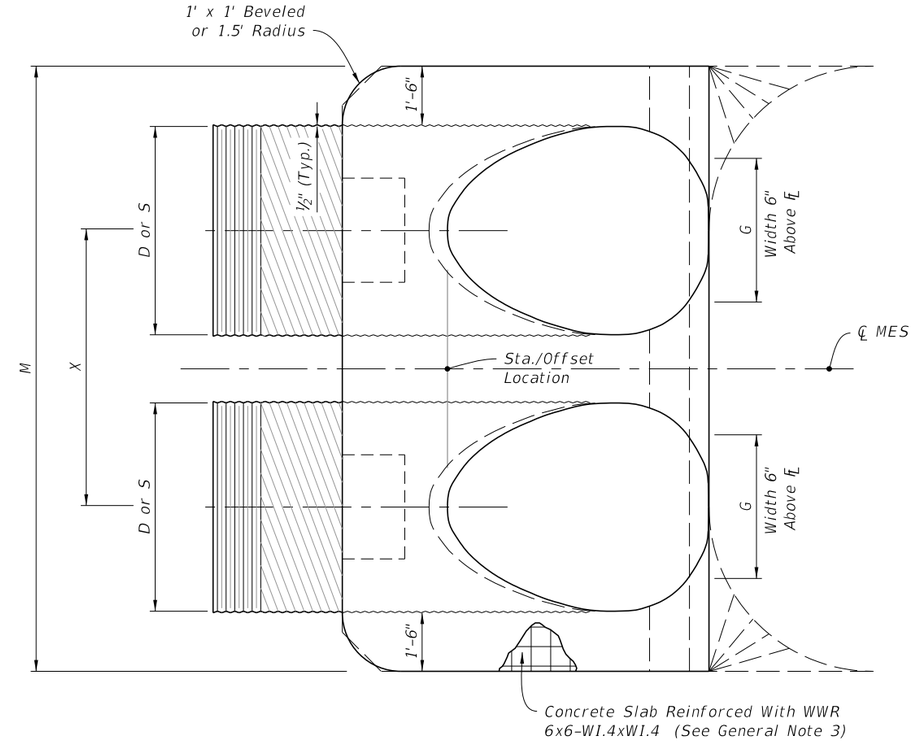

PLAN - MULTIPLE PIPE

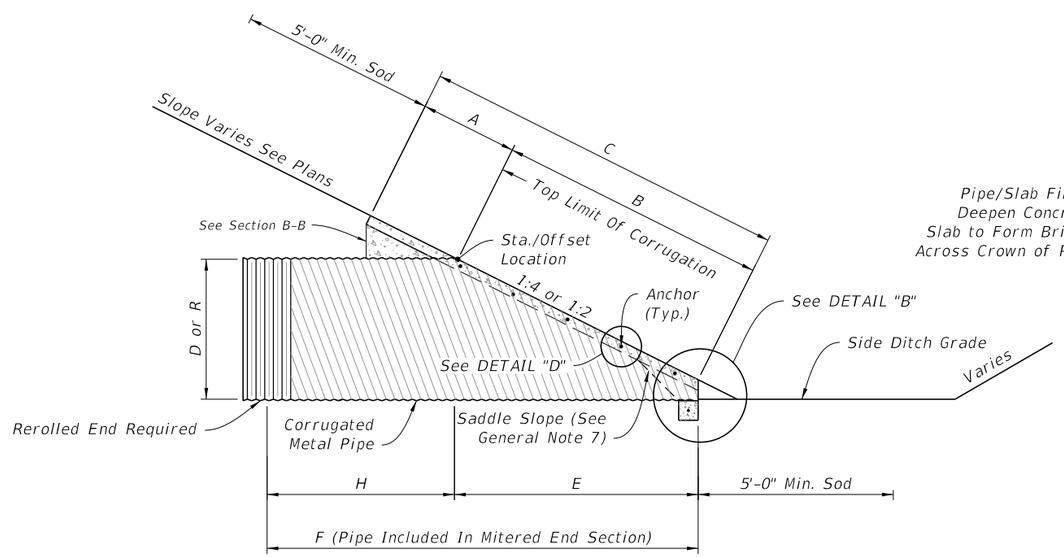

ELEVATION

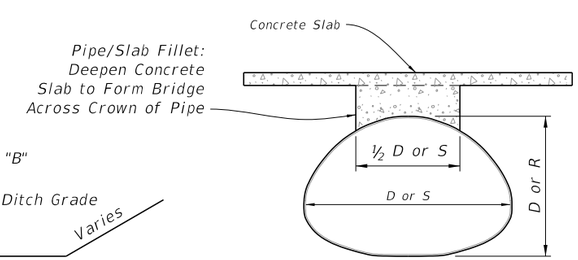

SECTION B-B
(Pipe/Slab Fillet)

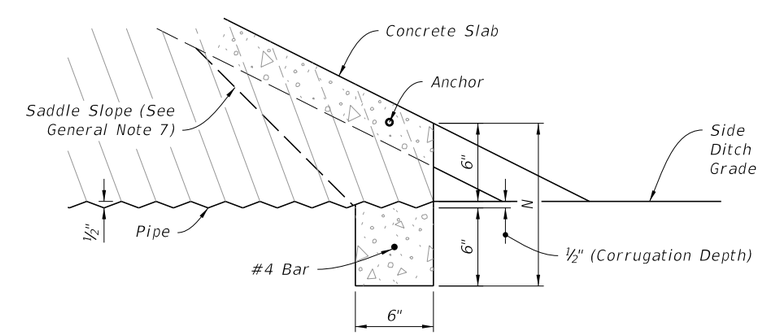

DETAIL "B"

ARCHED CORRUGATED METAL PIPE
(Round Pipe Similar)

NOTE: See Table 2 on Sheet 5 for Dimensions and Quantities.

SINGLE AND MULTIPLE CORRUGATED METAL PIPE

LAST REVISION	REVISION	DESCRIPTION:			INDEX	SHEET
11/01/19			FY 2022-23 STANDARD PLANS	CROSS DRAIN MITERED END SECTION	430-021	4 of 6

9/21/2021 1:47:35 PM

TABLE 2

SINGLE AND MULTIPLE CORRUGATED METAL PIPE DIMENSIONS AND QUANTITIES

		Dia. D	Span S	Rise R	X	A	B	C	E	F	G	H	M Single Pipe	M Double Pipe	M Triple Pipe	M Quad. Pipe	N	5½" CONC. SLAB (CY) (See General Note 3) Single Pipe	Double Pipe	Triple Pipe	Quad. Pipe	3" CONC. SLAB (CY) (See General Note 3) Single Pipe	Double Pipe	Triple Pipe	Quad. Pipe	SODDING (SY) Single Pipe	Double Pipe	Triple Pipe	Quad. Pipe
Round Corrugated Metal Pipe	1:2 Slope	15"	—	—	2'-7"	2.5'	1.68'	4.18'	1.5'	5.0'	1.23'	3.5'	4.33'	6.92'	9.50'	12.08'	1.04'	0.35	0.54	0.74	0.94	0.24	0.37	0.51	0.64	21	24	27	29
		18"	—	—	2'-10"	2.5'	2.24'	4.74'	2.0'	6.0'	1.41'	4.0'	4.58'	7.42'	10.25'	13.08'	1.04'	0.38	0.62	0.87	1.12	0.26	0.43	0.61	0.78	22	25	28	31
		24"	—	—	3'-5"	2.5'	3.35'	5.85'	3.0'	7.0'	1.73'	4.0'	5.08'	8.50'	11.92'	15.33'	1.04'	0.47	0.76	1.05	1.34	0.32	0.52	0.72	0.91	23	27	31	35
		30"	—	—	4'-3"	2.5'	4.47'	6.97'	4.0'	8.0'	2.00'	4.0'	5.58'	9.83'	14.08'	18.33'	1.04'	0.57	0.96	1.37	1.77	0.38	0.64	0.91	1.18	25	30	35	39
		36"	—	—	5'-1"	2.5'	5.59'	8.09'	5.0'	9.0'	2.24'	4.0'	6.08'	11.17'	16.25'	21.33'	1.04'	0.67	1.19	1.72	2.26	0.44	0.78	1.13	1.48	27	33	38	44
		42"	—	—	6'-0"	2.5'	6.71'	9.21'	6.0'	10.0'	2.45'	4.0'	6.58'	12.58'	18.58'	24.58'	1.04'	0.78	1.48	2.17	2.87	0.51	0.96	1.41	1.87	29	36	42	49
		48"	—	—	6'-9"	2.5'	7.83'	10.33'	7.0'	11.0'	2.65'	4.0'	7.08'	13.83'	20.58'	27.33'	1.04'	0.89	1.71	2.54	3.36	0.57	1.09	1.63	2.15	31	38	46	53
		54"	—	—	7'-8"	2.5'	8.94'	11.44'	8.0'	12.0'	2.83'	4.0'	7.58'	15.25'	22.92'	30.58'	1.04'	1.02	2.06	3.10	4.14	0.65	1.32	1.99	2.66	33	41	50	58
		60"	—	—	8'-6"	2.5'	10.06'	12.56'	9.0'	13.0'	3.00'	4.0'	8.08'	16.58'	25.08'	33.58'	1.04'	1.14	2.38	3.63	4.89	0.71	1.49	2.28	3.07	34	44	53	63
	1:4 Slope	15"	—	—	2'-7"	2.5'	3.09'	5.59'	3.0'	7.0'	1.23'	4.0'	4.33'	6.92'	9.50'	12.08'	1.04'	0.44	0.68	0.91	1.15	0.31	0.47	0.63	0.79	22	25	28	31
		18"	—	—	2'-10"	2.5'	4.12'	6.62'	4.0'	8.0'	1.41'	4.0'	4.58'	7.42'	10.25'	13.08'	1.04'	0.49	0.77	1.03	1.31	0.34	0.53	0.71	0.90	24	27	30	33
		24"	—	—	3'-5"	2.5'	6.18'	8.68'	6.0'	10.0'	1.73'	4.0'	5.08'	8.50'	11.92'	15.33'	1.04'	0.65	1.09	1.38	1.77	0.44	0.69	0.92	1.18	27	30	34	38
		30"	—	—	4'-3"	2.5'	8.25'	10.75'	8.0'	12.0'	2.00'	4.0'	5.58'	9.83'	14.08'	18.33'	1.04'	0.81	1.34	1.90	2.44	0.53	0.88	1.25	1.60	29	34	39	44
		36"	—	—	5'-1"	2.5'	10.31'	12.81'	10.0'	14.0'	2.24'	4.0'	6.08'	11.17'	16.25'	21.33'	1.04'	0.97	1.68	2.41	3.14	0.62	1.07	1.53	2.00	32	38	44	49
		42"	—	—	6'-0"	2.5'	12.37'	14.87'	12.0'	16.0'	2.45'	4.0'	6.58'	12.58'	18.58'	24.58'	1.04'	1.13	2.08	3.06	4.02	0.71	1.30	1.92	2.52	35	42	48	55
		48"	—	—	6'-9"	2.5'	14.43'	16.93'	14.0'	18.0'	2.65'	4.0'	7.08'	13.83'	20.58'	27.33'	1.04'	1.29	2.49	3.69	4.88	0.80	1.54	2.29	3.02	38	46	53	60
		54"	—	—	7'-8"	2.5'	16.49'	18.99'	16.0'	20.0'	2.83'	4.0'	7.58'	15.25'	22.92'	30.58'	1.04'	1.48	2.98	4.47	5.98	0.91	1.83	2.74	3.67	41	49	58	66
		60"	—	—	8'-6"	2.5'	18.55'	21.05'	18.0'	22.0'	3.00'	4.0'	8.08'	16.58'	25.08'	33.58'	1.04'	1.66	3.49	5.31	7.13	1.02	2.15	3.27	4.39	44	53	63	72
Corrugated Metal Pipe Arch	1:2 Slope	—	17"	13"	2'-6"	2.5'	1.30'	3.80'	1.17'	4'	1.39'	2.8'	4.50'	7.00'	9.50'	12.00'	1.04'	0.41	0.61	0.81	1.02	0.33	0.49	0.65	0.81	21	23	26	29
		—	21"	15"	2'-10"	2.5'	1.68'	4.17'	1.50'	5'	1.76'	3.5'	4.83'	7.67'	10.50'	13.33'	1.04'	0.43	0.66	0.88	1.10	0.33	0.50	0.67	0.83	22	25	28	31
		—	28"	20"	3'-5"	2.5'	2.61'	5.11'	2.33'	6'	2.22'	3.7'	5.42'	8.83'	12.25'	15.67'	1.04'	0.51	0.78	1.06	1.33	0.37	0.56	0.76	0.95	23	27	30	34
		—	35"	24"	4'-0"	2.5'	3.35'	5.85'	3.00'	7'	2.55'	4.0'	6.00'	10.00'	14.00'	18.00'	1.04'	0.57	0.90	1.22	1.55	0.40	0.62	0.84	1.07	24	29	33	38
		—	42"	29"	4'-9"	2.5'	4.29'	6.79'	3.83'	8'	2.97'	4.2'	6.58'	11.33'	16.08'	20.83'	1.04'	0.64	1.04	1.46	1.87	0.43	0.70	0.98	1.25	26	31	37	42
		—	49"	33"	5'-6"	2.5'	5.03'	7.53'	4.50'	9'	3.34'	4.5'	7.17'	12.67'	18.17'	23.67'	1.04'	0.73	1.23	1.72	2.22	0.49	0.82	1.15	1.48	28	34	40	46
		—	57"	38"	6'-4"	2.5'	5.96'	8.46'	5.33'	10'	3.65'	4.7'	7.83'	14.17'	20.50'	26.83'	1.04'	0.83	1.44	2.04	2.64	0.55	0.95	1.35	1.75	29	36	44	51
		—	64"	43"	7'-1"	2.5'	6.89'	9.39'	6.17'	11'	3.89'	4.8'	8.42'	15.50'	22.58'	29.67'	1.04'	0.95	1.67	2.39	3.11	0.62	1.10	1.57	2.05	31	39	47	55
		—	71"	47"	7'-10"	2.5'	7.64'	10.14'	6.83'	12'	4.14'	5.2'	9.00'	16.83'	24.67'	32.50'	1.04'	1.05	1.89	2.74	3.57	0.69	1.24	1.80	2.35	33	41	50	59
	1:4 Slope	—	17"	13"	2'-6"	2.5'	2.41'	4.91'	2.33'	7'	1.39'	4.7'	4.50'	7.00'	9.50'	12.00'	1.04'	0.48	0.71	0.95	1.18	0.38	0.56	0.74	0.92	22	25	27	30
		—	21"	15"	2'-10"	2.5'	3.09'	5.59'	3.00'	8'	1.76	5.0'	4.83'	7.67'	10.50'	13.33'	1.04'	0.52	0.80	1.09	1.31	0.39	0.59	0.80	0.95	23	26	29	32
		—	28"	20"	3'-5"	2.5'	4.81'	7.31'	4.67'	9'	2.22'	4.3'	5.42'	8.83'	12.25'	15.67'	1.04'	0.61	0.92	1.27	1.59	0.43	0.64	0.88	1.10	25	29	33	37
		—	35"	24"	4'-0"	2.5'	6.18'	8.68'	6.00'	11'	2.55'	5.0'	6.00'	10.00'	14.00'	18.00'	1.04'	0.73	1.14	1.55	1.97	0.49	0.77	1.05	1.33	28	32	37	41
		—	42"	29"	4'-9"	2.5'	7.90'	10.40'	7.67'	12'	2.97'	4.3'	6.58'	11.33'	16.08'	20.83'	1.04'	0.87	1.39	1.92	2.45	0.57	0.92	1.27	1.62	30	35	41	46
		—	49"	33"	5'-6"	2.5'	9.28'	11.78'	9.00'	14'	3.34'	5.0'	7.17'	12.67'	18.17'	23.67'	1.04'	1.00	1.66	2.30	2.96	0.65	1.08	1.50	1.93	32	38	45	51
		—	57"	38"	6'-4"	2.5'	11.00'	13.50'	10.67'	16'	3.65'	5.3'	7.83'	14.17'	20.50'	26.83'	1.04'	1.18	2.00	2.82	3.64	0.76	1.30	1.83	2.37	35	42	49	56
		—	64"	43"	7'-1"	2.5'	12.71'	15.21'	12.33'	17'	3.89'	4.7'	8.42'	15.50'	22.58'	29.67'	1.04'	1.36	2.39	3.38	4.38	0.87	1.55	2.18	2.83	38	45	53	61
		—	71"	47"	7'-10"	2.5'	14.09'	16.59'	13.67'	19'	4.14'	5.3'	9.00'	16.83'	24.67'	32.50'	1.04'	1.50	2.65	3.81	4.97	0.95	1.68	2.43	3.17	40	48	57	66

CORRUGATED METAL PIPE DIMENSIONS AND QUANTITIES

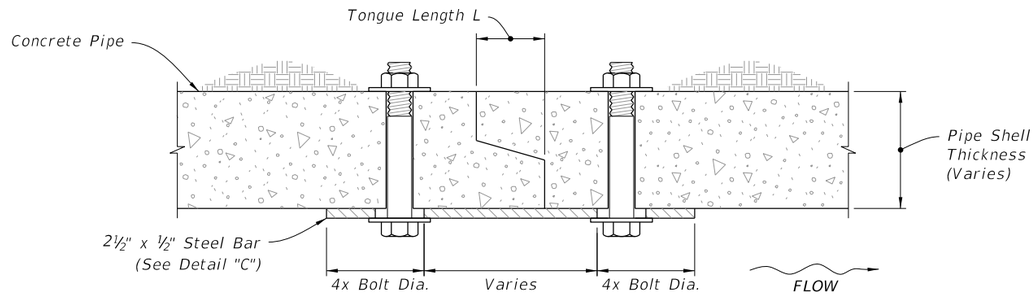

TONGUE AND GROOVE CONNECTOR DETAIL

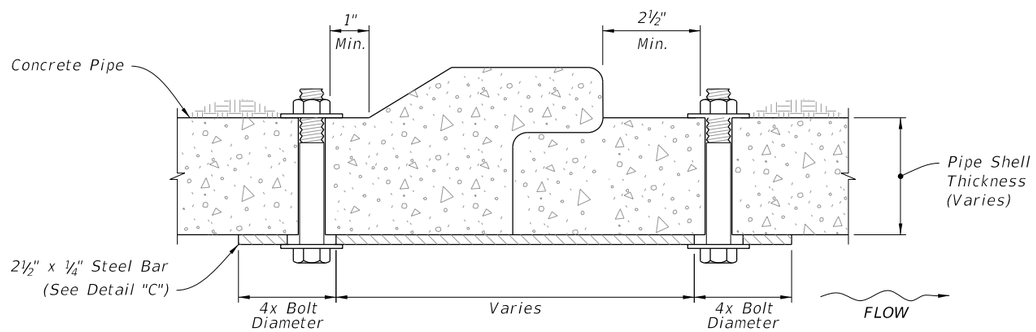

BELL AND SPIGOT CONNECTOR DETAIL

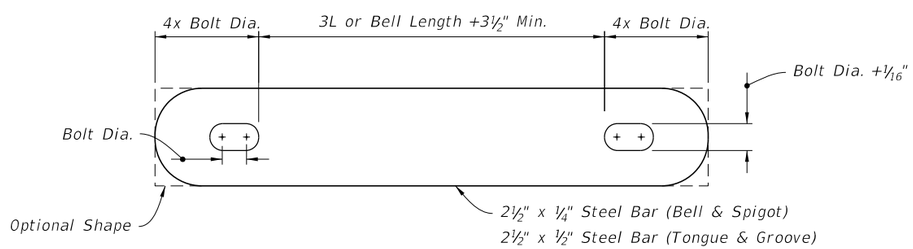

STEEL BAR

NOTES:

1. Use galvanized steel for all bars, bolts, nuts, and washers.
2. Two connectors required per joint, located 60° right and left of bottom center of pipe.
3. Bolt holes in pipe shell are to be drilled.

Bolt Dia.	Pipe Dia.
⅜"	15" to 36"
⅝"	42" to 72"

CONCRETE PIPE CONNECTION DETAIL

DETAIL "C"

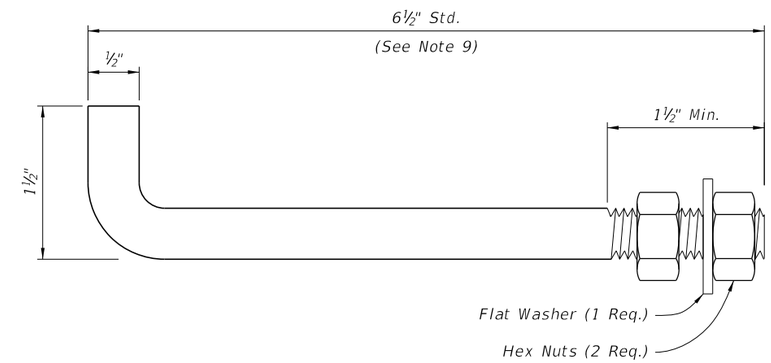

NOTES:

1. Anchors required for CMP only.
2. Use galvanized steel for all anchors, nuts, and washers.
3. Bend anchor where required to center in concrete slab.
4. Repair damaged surfaces after bending.
5. Space anchors a distance equal to four (4) corrugations.
6. Place the anchors in the outside crest of corrugation.
7. Place flat washers on inside wall of pipe.
8. Drill or punch holes in the mitered end pipe; burning not permitted.
9. A 6" x ½" bolt substitution is permitted.

CORRUGATED METAL PIPE (CMP) ANCHOR DETAIL

DETAIL "D"

CONCRETE PIPE CONNECTION AND CORRUGATED PIPE ANCHOR DETAILS

GENERAL NOTES:

1. Unless otherwise designated in the plans, concrete pipe mitered end sections may be used with any type of side drain pipe; corrugated steel pipe mitered end sections may be used with any type of side drain pipe except aluminum pipe; and, corrugated aluminum mitered end sections may be used with any type of side drain pipe except steel pipe. When bituminous coated metal pipe is specified for side drain pipe, construct the mitered end sections with like pipe or concrete pipe. When the mitered end section pipe is dissimilar to the side drain pipe, construct a concrete jacket in accordance with Index 430-001.

2. Use either corrugated metal or concrete mitered end sections for corrugated polyethylene pipe (HDPE), polyvinyl-chloride pipe (PVC), steel reinforced polyethylene pipe (SRPE), and polypropylene pipe (PP). When used in conjunction with corrugated mitered end sections, make connection using either a formed metal band specifically designated to join HDPE, PVC, SRPE, or PVC pipe. When used in conjunction with a concrete mitered end sections, construct concrete jacket in accordance with Index 430-001.

3. Use class NS concrete cast-in-place reinforced slabs for all cross drain pipes.

4. Select lengths of concrete pipe that avoid excessive connections in the assembly of the mitered end section.

5. Repair corrugated metal pipe galvanizing that is damaged during beveling and perforating.

6. When existing multiple side drain pipes are spaced other than the dimensions shown in this Index, have nonparallel axes, or non-uniform sections, either construct the mitered end sections separately as single pipe or collectively as multiple pipe end sections as directed by the Engineer.

7. Saddle Slope:
   - 1:4 Miter - Slope to ℄ of pipe for round pipes less than or equal to 18" diameter and 1:1 for round pipes greater than or equal to 24" diameter.
     Slope to the major axis for elliptical pipes 24"x38" or smaller and 1:2 for pipes 29"x45" or larger.
     Slope to the span line for pipe arch 28"x20" or smaller and 1:2 for pipe arch 35"x24" or larger.
   - 1:2 Miter - Slope to ℄ of pipe for round pipes less than or equal to 18"diameter and 1:2 for round pipes greater than or equal to 24" diameter.
     Slope to the major axis for elliptical pipes 29"x45" or smaller and 1:1 for pipes 34"x53" or larger.
     Slope 1:1 for all pipe arch sizes.

8. Quantities shown are for estimating purposes only.

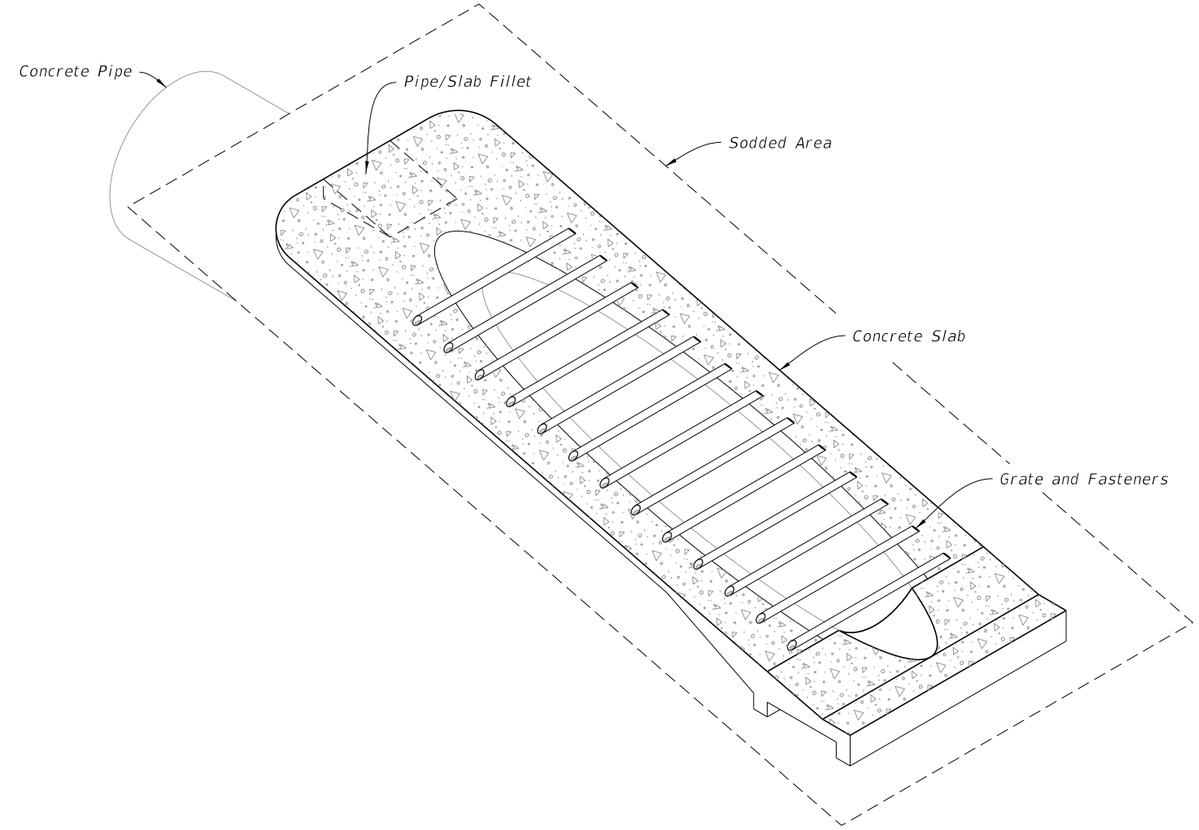

SIDEDRAIN MITERED END SECTION
(Concrete Pipe Shown, Corrugated Metal Pipe Similar)

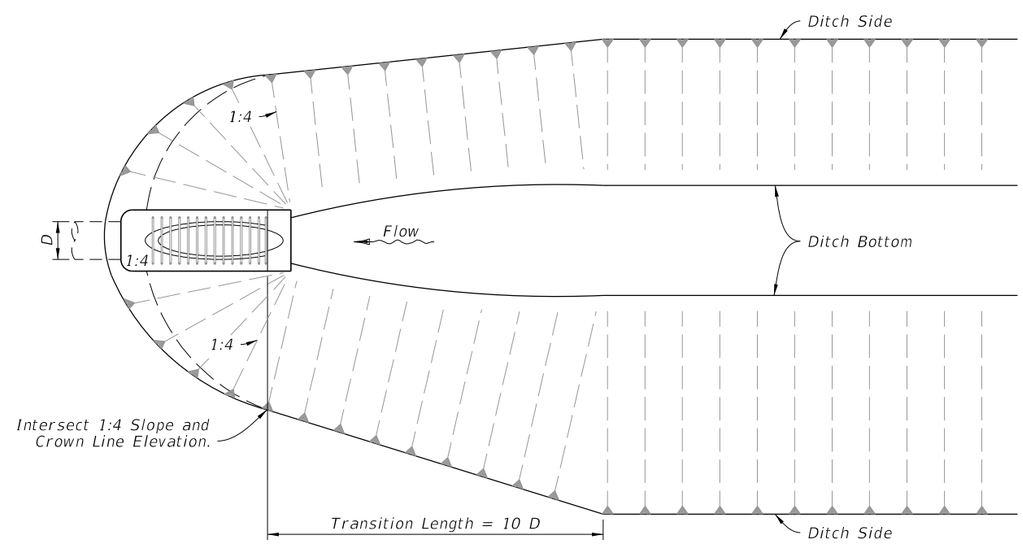

DITCH TRANSITION

TABLE OF CONTENTS:

Sheet	Description
1	General Notes and Contents
2	Single and Multiple Concrete Pipe
3	Concrete Pipe Dimensions and Quantities and Permissible Pavement Modifications
4	Single and Multiple Corrugated Metal Pipe
5	Corrugated Metal Dimensions and Quantities
6	Concrete Pipe Connection and Corrugated Metal Pipe Anchor Details
7	Fastener Unit and Grate Details

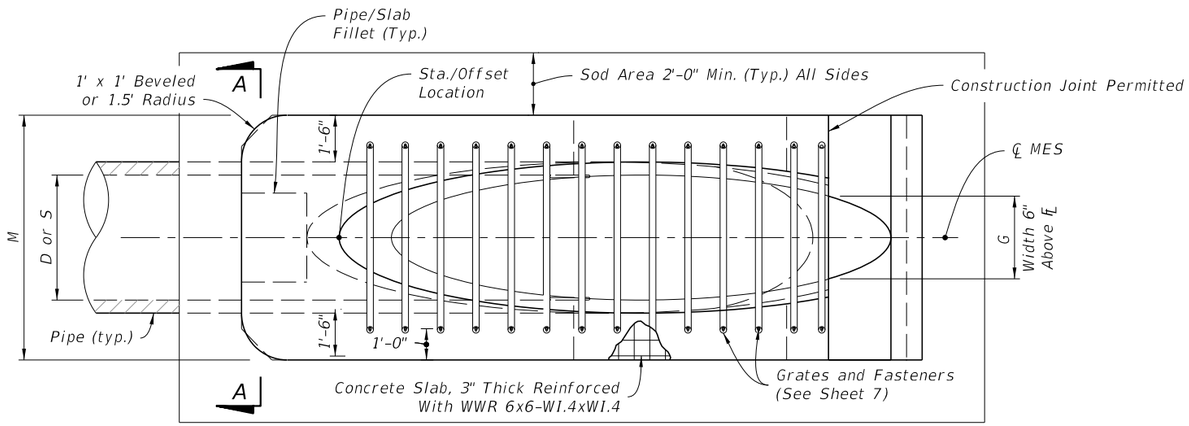

PLAN - SINGLE PIPE

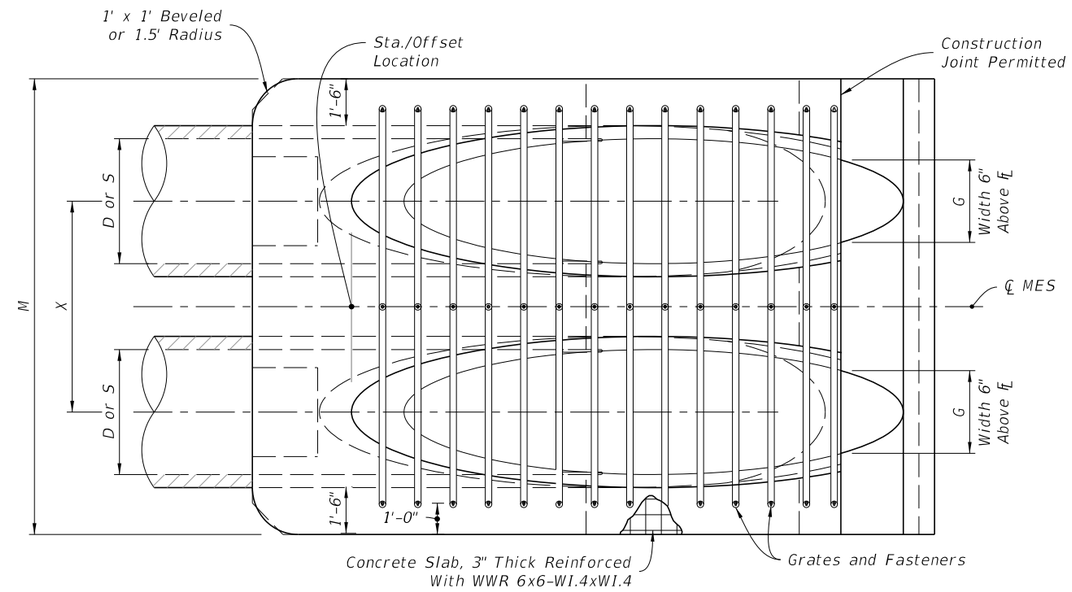

PLAN - MULTIPLE PIPE

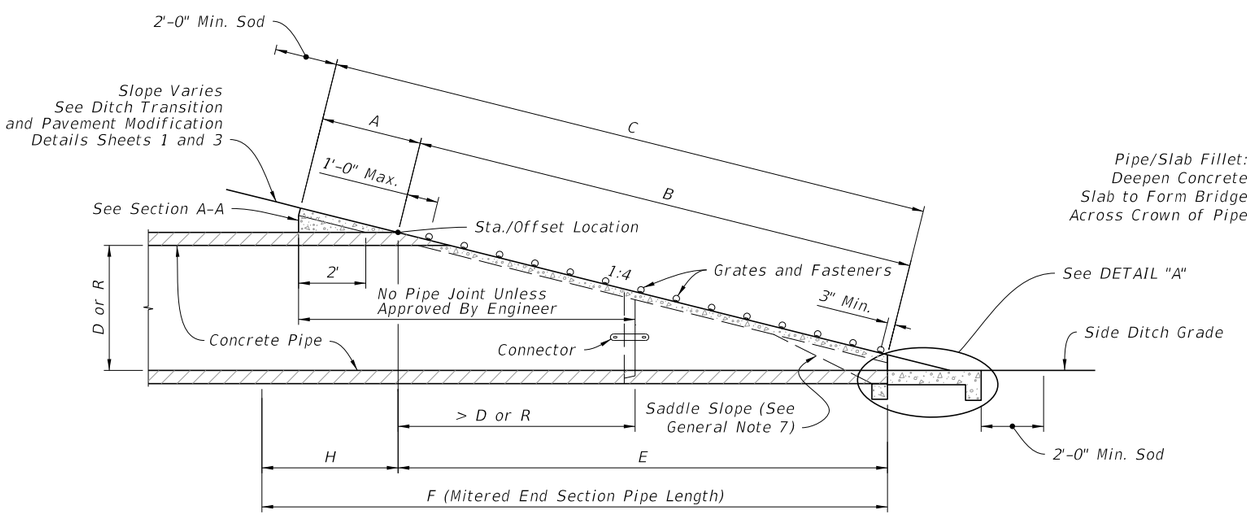

ELEVATION

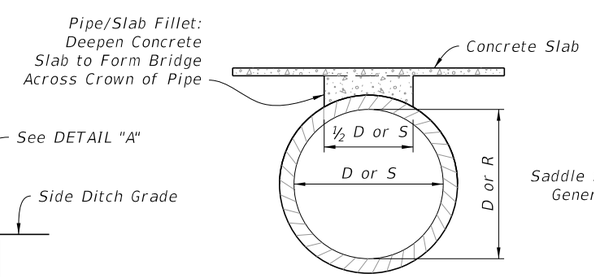

SECTION A-A
(Pipe/Slab Fillet)

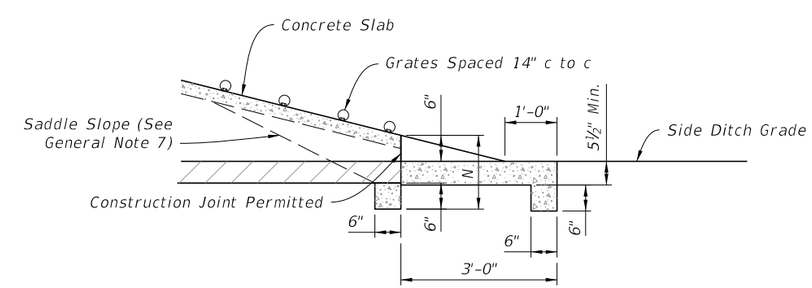

DETAIL "A"

ROUND CONCRETE PIPE
(Elliptical Pipe Similar)

SINGLE AND MULTIPLE CONCRETE PIPE

LAST REVISION	REVISION	DESCRIPTION:			INDEX	SHEET
11/01/18			FY 2022-23 STANDARD PLANS	SIDE DRAIN MITERED END SECTION	430-022	2 of 7

9/21/2021 1:47:39 PM

SINGLE AND MULTIPLE CONCRETE PIPE DIMENSIONS AND QUANTITIES

Pipe	Dia. D	Rise R	Span S	X	A	B	C	E	F	G	H	M				N	GRATE SIZES		3" CONC. SLAB (CY)				SODDING (SY)			
												Single Pipe	Double Pipe	Triple Pipe	Quad. Pipe		STANDARD WEIGHT PIPE	EXTRA STRONG PIPE	Single Pipe	Double Pipe	Triple Pipe	Quad. Pipe	Single Pipe	Double Pipe	Triple Pipe	Quad. Pipe
Round Concrete	15"	—	—	2'-7"	2.27'	4.09'	6.36'	4.03'	8'	1.22'	4.0'	4.63'	7.21'	9.79'	12.37'	1.19'			0.76	1.16	1.54	1.94	8	10	11	12
	18"	—	—	2'-10"	2.36'	5.12'	7.48'	5.03'	9'	1.41'	4.0'	4.92'	7.75'	10.58'	13.42'	1.21'			0.85	1.28	1.71	2.17	9	10	12	13
	24"	—	—	3'-5"	2.53'	7.18'△	9.71'	7.03' △	11'	1.73'	4.0'	5.50'	8.92'	12.33'	15.75'	1.25'			1.02	1.58	2.15	2.75	10	12	13	15
	30"	—	—	4'-3"	2.70'	9.25'	11.95'	9.03'	13'	2.00'	4.0'	6.08'	10.33'	14.58'	18.83'	1.29'	2½"	3"	1.23	1.98	2.74	3.50	12	14	15	17
	36"	—	—	5'-1"	2.87'	11.31'◇	14.18'	11.03' ◇	15'	2.24'	4.0'	6.67'	11.75'	16.83'	21.92'	1.33'	2½"	3"	1.40	2.38	3.33	4.24	13	15	17	20
	42"	—	—	6'-0"	3.05'	13.37'	16.42'	13.03'	17'	2.45'	4.0'	7.25'	13.25'	19.25'	25.25'	1.38'	2½"	3½"	1.60	2.83	4.04	5.26	14	17	19	22
	48"	—	—	6'-9"	3.22'	15.43'	18.65'	15.03'	19'	2.65'	4.0'	7.83'	14.58'	21.33'	28.08'	1.42'	2½"	3½"	1.81	3.26	4.70	6.14	15	18	21	24
	54"	—	—	7'-8"	3.39'	17.49'	20.88'	17.03'	21'	2.83'	4.0'	8.42'	16.08'	23.75'	31.42'	1.46'	3"	4"	2.03	3.78	5.54	7.28	17	20	23	27
	60"	—	—	8'-6"	3.56'	19.55'	23.11'	19.03'	23'	3.00'	4.0'	9.00'	17.50'	26.00'	34.50'	1.50'	3"	4"	2.28	4.36	6.43	8.50	18	22	25	29
Elliptical Concrete	—	12"	18"	2'-10"	2.36'	3.06'	5.42'	3.03'	5'	1.50'	2.0'	4.92'	7.75'	10.58'	13.42'	1.21'			0.68	1.04	1.41	1.77	8	9	11	12
	—	14"	23"	3'-4"	2.44'	3.75'	6.19'	3.70'	6'	1.90'	2.3'	5.38'	8.71'	12.04'	15.38'	1.23'			0.76	1.19	1.63	2.05	9	10	12	13
	—	19"	30"	4'-0"	2.62'	5.47'	8.09'	5.36'	8'	2.37'	2.6'	6.04'	10.04'	14.04'	18.04'	1.27'	2½"	3"	0.95	1.52	2.09	2.65	10	12	13	15
	—	24"	38"	5'-0"	2.79'	7.18'	9.97'	7.03'	10'	2.85'	3.0'	6.79'	11.79'	16.79'	21.79'	1.31'	2½"	3"	1.18	1.95	2.74	3.53	11	13	15	18
	—	29"	45"	5'-11"	3.05'	8.90'	11.95'	8.70'	12'	3.19'	3.3'	7.50'	13.42'	19.33'	25.25'	1.38'	2½"	3½"	1.41	2.42	3.44	4.45	12	15	18	20
	—	34"	53"	7'-0"	3.22'	10.62'	13.84'	10.36'	13'	3.57'	2.6'	8.25'	15.25'	22.25'	29.25'	1.42'	3"	3½"	1.63	2.92	4.22	5.52	13	17	20	23
	—	38"	60"	7'-10"	3.39'	11.99'	15.38'	11.70'	15'	3.95'	3.3'	8.92'	16.75'	24.58'	32.42'	1.46'	3"	4"	1.83	3.36	4.89	6.41	14	18	21	25
	—	43"	68"	8'-11"	3.56'	13.71'	17.27'	13.36'	17'	4.28'	3.6'	9.67'	18.58'	27.50'	36.42'	1.50'	3"	4"	2.09	3.95	5.80	7.65	16	20	23	27
	—	48"	76"	9'-11"	3.73'	15.43'	19.16'	15.03'	19'	4.59'	4.0'	10.42'	20.33'	30.25'	40.17'	1.54'	3"	HSS 5"x5/16"	2.37	4.54	6.73	8.92	17	21	26	30
	—	53"	83"	10'-8"	3.91'	17.15'	21.06'	16.70'	20'	4.77'	3.3'	11.08'	21.75'	32.42'	43.08'	1.58'	3"	HSS 5"x3/16"	2.61	5.09	7.56	10.03	18	23	27	32
	—	58"	91"	11'-8"	4.08'	18.87'	22.95'	18.36'	22'	5.01'	3.6'	11.83'	23.50'	35.17'	46.83'	1.63'	3½"	HSS 5"x3/8"	2.91	5.77	8.64	11.50	19	24	29	35

△6.42' △6.25' Dimensions permitted to allow use of 8' standard pipe lengths.

◇10.40' ◇10.10' Dimensions permitted to allow use of 12' standard pipe lengths.

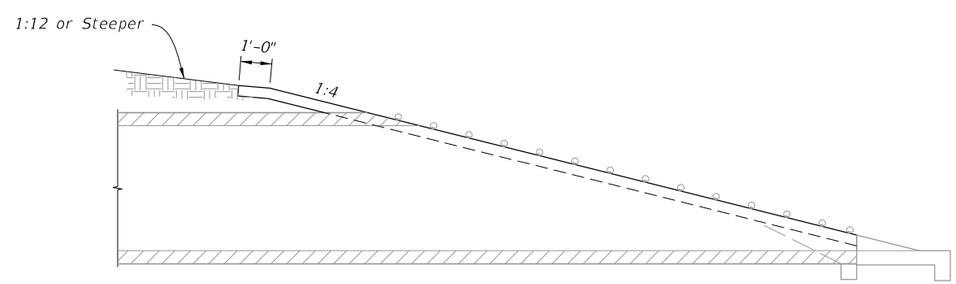

PERMISSIBLE PAVEMENT MODIFICATION

CONCRETE PIPE DIMENSIONS AND QUANTITIES
AND PERMISSIBLE PAVEMENT MODIFICATION

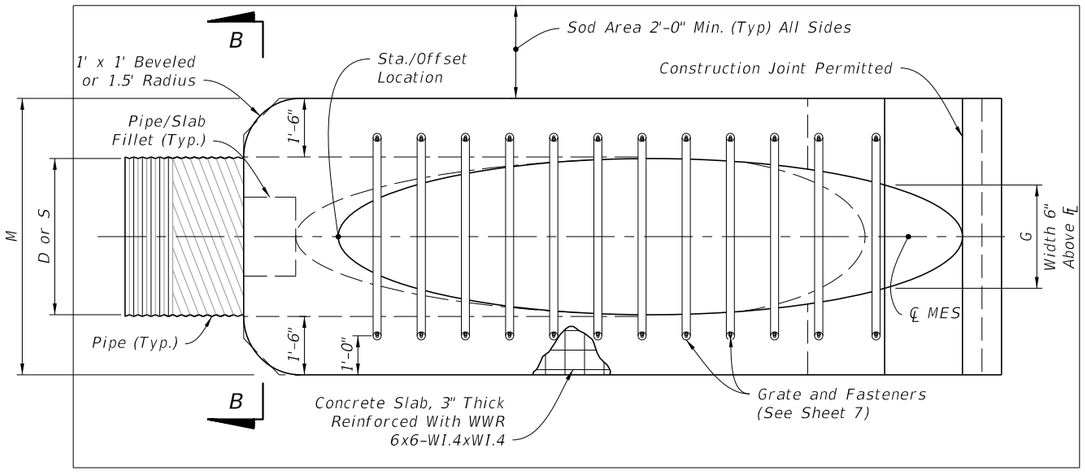

PLAN - SINGLE PIPE

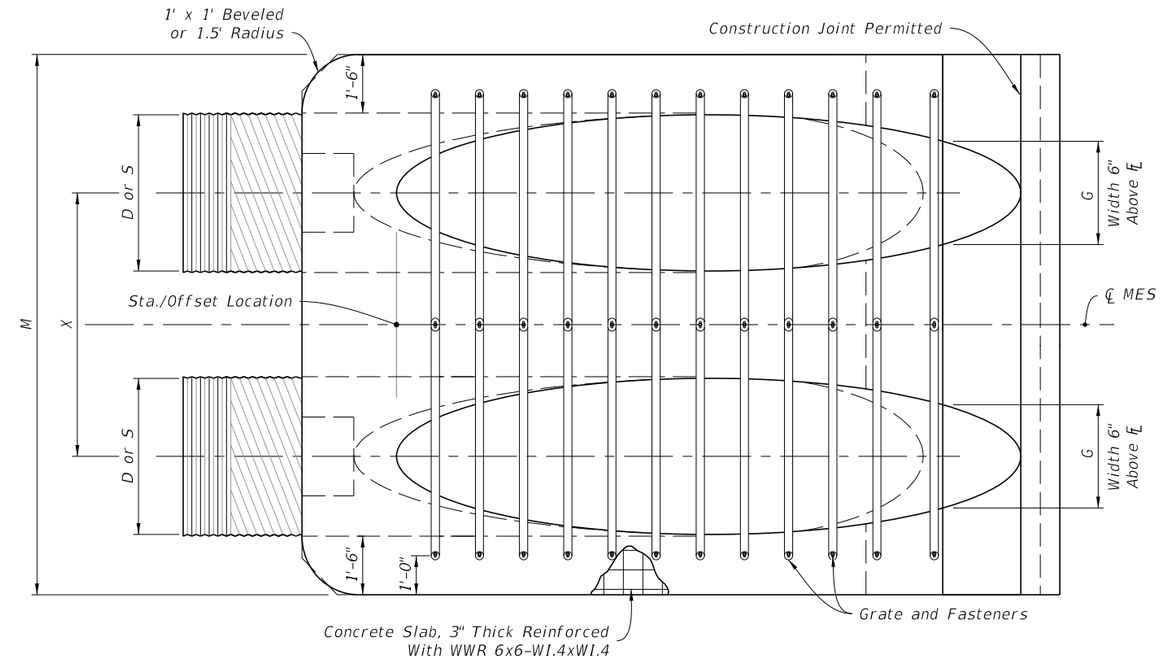

PLAN - MULTIPLE PIPE

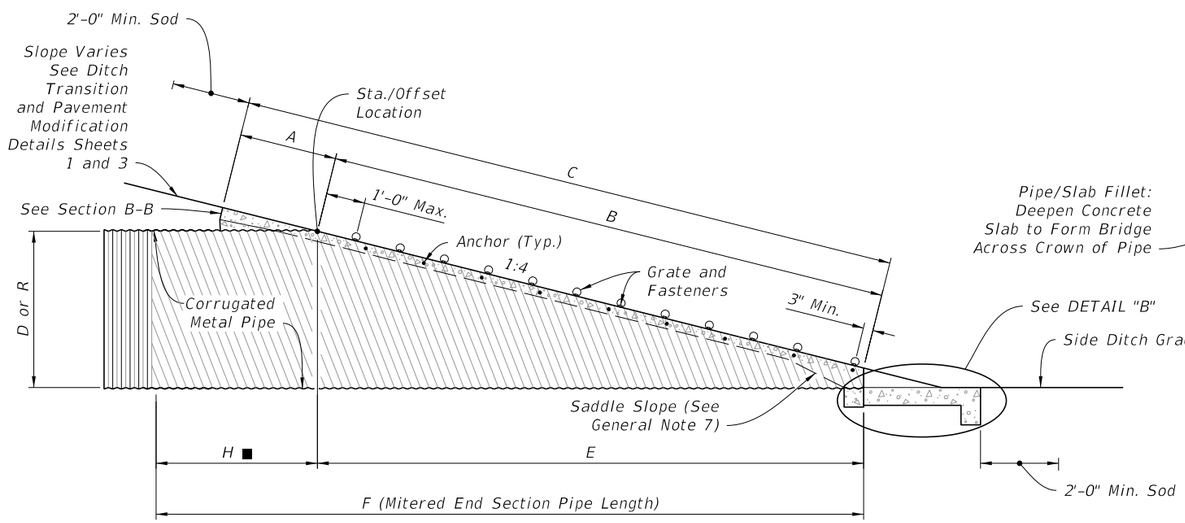

ELEVATION

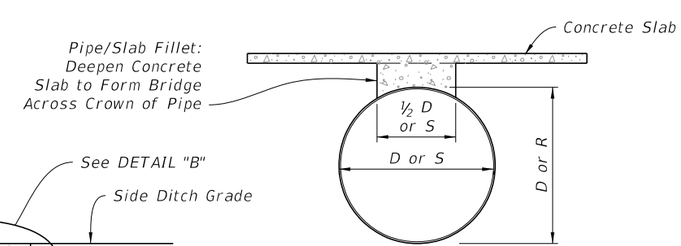

SECTION B-B
(Pipe/Slab Fillet)

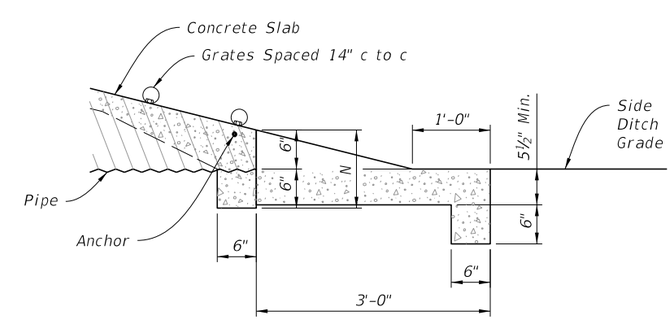

DETAIL "B"

ROUND CORRUGATED PIPE
(Arched Pipe Similar)

SINGLE AND MULTIPLE CORRUGATED METAL PIPE

LAST REVISION	REVISION	DESCRIPTION:			INDEX	SHEET
11/01/19			FY 2022-23 STANDARD PLANS	SIDE DRAIN MITERED END SECTION	430-022	4 of 7

9/21/2021 1:47:41 PM

SINGLE AND MULTIPLE CORRUGATED METAL PIPE DIMENSIONS AND QUANTITIES

Pipe	Dia. D	Rise R	Span S	X	A	B	C	E	F	G	H	M				N	GRATE SIZES		3" CONC. SLAB (CY)				SODDING (SY)			
												Single Pipe	Double Pipe	Triple Pipe	Quad. Pipe		STANDARD WEIGHT PIPE	EXTRA STRONG PIPE	Single Pipe	Double Pipe	Triple Pipe	Quad. Pipe	Single Pipe	Double Pipe	Triple Pipe	Quad. Pipe
Round Corrugated Metal Pipe	8"	—	—	2'-0"	2.5'	0.72'	3.22'	0.7'	4.0'	0.58'	3.3'	3.75'	5.75'	7.75'	9.75'	1.04'			0.52	0.90	1.22	1.54	7	8	8	9
	10"	—	—	2'-2"	2.5'	1.34'	3.84'	1.3'	5.0'	0.81'	3.7'	3.92'	6.08'	8.25'	10.41'	1.04'			0.64	0.99	1.34	1.70	7	8	9	10
	12"	—	—	2'-4"	2.5'	2.06'	4.56'	2.0'	6.0'	1.00'	4.0'	4.08'	6.42'	8.75'	11.08'	1.04'			0.68	1.09	1.48	1.88	7	8	10	11
	15"	—	—	2'-7"	2.5'	3.09'	5.59'	3.0'	7.0'	1.23'	4.0'	4.33'	6.92'	9.50'	12.08'	1.04'			0.64	1.00	1.35	1.71	8	9	10	11
	18"	—	—	2'-10"	2.5'	4.12'	6.62'	4.0'	8.0'	1.41'	4.0'	4.58'	7.42'	10.25'	13.08'	1.04'			0.69	1.09	1.49	1.89	9	10	11	12
	24"	—	—	3'-5"	2.5'	6.18'	8.68'	6.0'	10.0'	1.73'	4.0'	5.08'	8.50'	11.92'	15.33'	1.04'			0.83	1.34	1.82	2.34	10	11	13	14
	30"	—	—	4'-3"	2.5'	8.25'	10.75'	8.0'	12.0'	2.00'	4.0'	5.58'	9.83'	14.08'	18.33'	1.04'	2½"	3"	0.96	1.63	2.32	2.99	11	13	15	17
	36"	—	—	5'-1"	2.5'	10.31'	12.81'	10.0'	14.0'	2.24'	4.0'	6.08'	11.17'	16.25'	21.33'	1.04'	2½"	3"	1.08	1.92	2.77	3.62	12	14	17	19
	42"	—	—	6'-0"	2.5'	12.37'	14.87'	12.0'	16.0'	2.45'	4.0'	6.58'	12.58'	18.58'	24.58'	1.04'	2½"	3½"	1.20	2.26	3.34	4.61	13	16	18	21
	48"	—	—	6'-9"	2.5'	14.43'	16.93'	14.0'	18.0'	2.65'	4.0'	7.08'	13.83'	20.58'	27.33'	1.04'	2½"	3½"	1.60	3.11	4.62	6.12	14	17	20	23
	54"	—	—	7'-8"	2.5'	16.49'	18.99'	16.0'	20.0'	2.83'	4.0'	7.58'	15.25'	22.92'	30.58'	1.04'	3"	4"	1.76	3.56	5.34	7.14	15	19	22	26
	60"	—	—	8'-6"	2.5'	18.55'	21.05'	18.0'	22.0'	3.00'	4.0'	8.08'	16.58'	25.08'	33.58'	1.04'	3"	4"	1.94	4.03	6.12	8.20	17	20	24	28
Corrugated Metal Pipe - Arch	—	17"	13"	2'-6"	2.5'	2.41'	4.91'	2.33'	7'	1.39'	4.7'	4.50'	7.00'	9.50'	12.00'	1.04'			0.62	0.95	1.27	1.60	8	9	10	11
	—	21"	15"	2'-10"	2.5'	3.09'	5.59'	3.00'	8'	1.76'	5.0'	4.83'	7.67'	10.50'	13.33'	1.04'			0.69	1.06	1.44	1.77	8	9	11	12
	—	28"	20"	3'-5"	2.5'	4.81'	7.31'	4.67'	9'	2.22'	4.3'	5.42'	8.83'	12.25'	15.67'	1.04'			0.81	1.26	1.73	2.19	9	11	12	14
	—	35"	24"	4'-0"	2.5'	6.18'	8.68'	6.00'	11'	2.55'	5.0'	6.00'	10.00'	14.00'	18.00'	1.04'	2½"	3"	0.94	1.51	2.09	2.66	10	12	14	15
	—	42"	29"	4'-9"	2.5'	7.90'	10.40'	7.67'	12'	2.97'	4.3'	6.58'	11.33'	16.08'	20.83'	1.04'	2½"	3½"	1.06	1.76	2.46	3.16	11	13	15	17
	—	49"	33"	5'-6"	2.5'	9.28'	11.78'	9.00'	14'	3.34'	5.0'	7.17'	12.67'	18.17'	23.67'	1.04'	2½"	3½"	1.19	2.02	2.84	3.68	12	14	17	19
	—	57"	38"	6'-4"	2.5'	11.00'	13.50'	10.67'	16'	3.65'	5.3'	7.83'	14.17'	20.50'	26.83'	1.04'	3"	4"	1.35	2.35	3.35	4.36	13	16	19	22
	—	64"	43"	7'-1"	2.5'	12.71'	15.21'	12.33'	17'	3.89'	4.7'	8.42'	15.50'	22.58'	29.67'	1.04'	3"	4"	1.50	2.70	3.86	5.03	14	17	20	24
	—	71"	47"	7'-10"	2.5'	14.09'	16.59'	13.67'	19'	4.14'	5.3'	9.00'	16.83'	24.67'	32.50'	1.04'	3"	4"	1.62	2.94	4.27	5.59	15	18	22	25

CORRUGATED METAL PIPE DIMENSIONS AND QUANTITIES

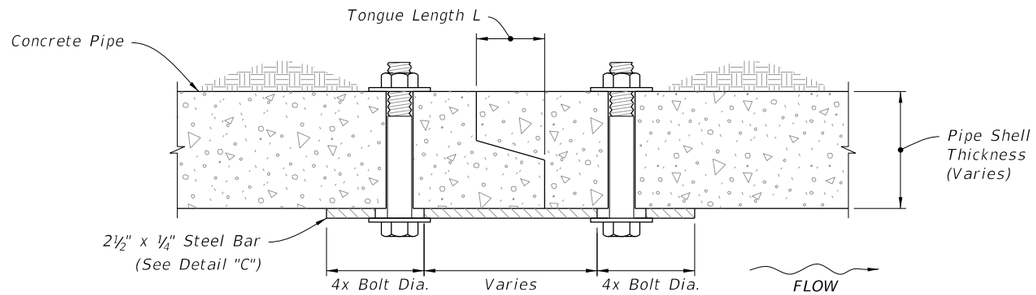

TONGUE AND GROOVE CONNECTOR DETAIL

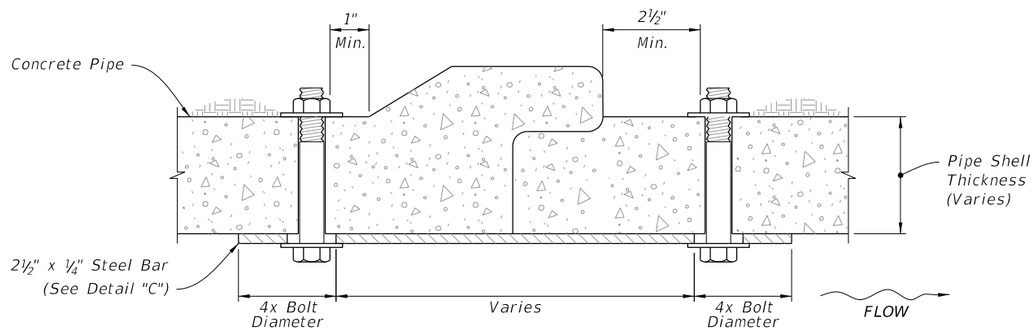

BELL AND SPIGOT CONNECTOR DETAIL

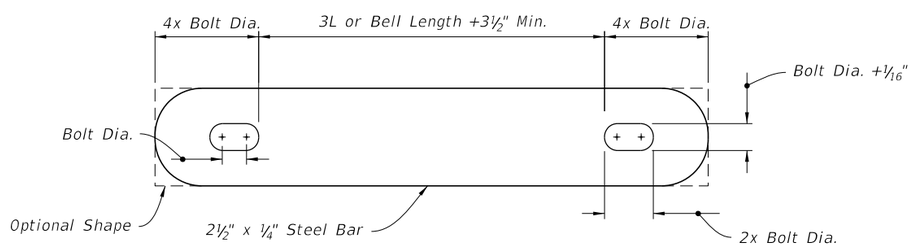

STEEL BAR

NOTES:

1. Use galvanized steel for all bars, bolts, nuts, and washers.
2. Two connectors required per joint, located 60° right and left of bottom center of pipe.
3. Bolt holes in pipe shell are to be drilled.

Bolt Dia.	Pipe Dia.
⅜"	15" to 36"
⅝"	42" to 72"

CONCRETE PIPE CONNECTION DETAIL

DETAIL "C"

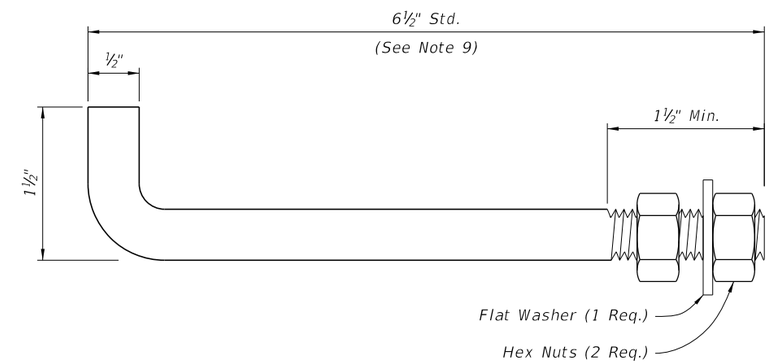

NOTES:

1. Anchors required for CMP only.
2. Use galvanized steel for all anchors, nuts, and washers.
3. Bend anchor where required to center in concrete slab.
4. Repair damaged surfaces after bending.
5. Space anchors a distance equal to four (4) corrugations.
6. Place the anchors in the outside crest of corrugation.
7. Place flat washers on inside wall of pipe.
8. Drill or punch holes in the mitered end pipe; burning not permitted.
9. A 6" x ½" bolt substitution is permitted.

CORRUGATED METAL PIPE (CMP) ANCHOR DETAIL

DETAIL "D"

CONCRETE PIPE CONNECTION AND CORRUGATED PIPE ANCHOR DETAILS

NOTES:

1. ⅝" x 3" bolts are standard for all grate fasteners, except when the contractor elects to use the slotted upper holes for the intermediate fasteners on multiple drain pipes, which will require bolt lengths in the Special Bolt Length Table.
2. ⅝" galvanized bolt hex head bolt shown; either hex head or square head bolt may be used. Use only hex nuts.
3. Make the specified weld when the fabricated unit is subject to hazardous hauls and repeated handling. Tack welds are permitted for local or job site fabrication. Galvanizing over welded surface not required.
4. Omit on trailing downstream ends on divided roadways.
5. Use grates on all round pipes 30" or greater, Pipe arches 35" x 24" or greater, and elliptical pipe 19" x 30" or greater, unless excluded in the Plans. Use grates on smaller pipes only when called for in the Plans.

CONCRETE PIPE

ROUND PIPE					ELLIPTICAL PIPE				
Pipe Dia.	s	n	L	La	Drain Size	s	n	L	La
*15"	3	4	4'-0"	4'-11"	*12"x18"	2	3	2'-10"	3'-9"
*18"	4	5	5'-2"	6'-1"	*14"x23"	3	4	4'-0'	4'-11"
*24"	6	7	7'-6"	8'-5"	19"x30"	4	5	5'-2"	6'-1"
30"	7	8	8'-8"	9'-7"	24"x38"	5	6	6'-4"	7'-3"
36"	9	10	11'-0"	11'-11"	29"x45"	7	8	8'-8"	9'-7"
42"	11	12	13'-4"	14'-3"	34"x53"	8	9	9'-10"	0'-9"
48"	13	14	15'-8"	16'-7"	38"x60"	10	11	12'-2"	13'-1"
54"	14	15	16'-10"	17'-9"	43"x68"	11	12	13'-4"	14'-3"
60"	16	17	19'-2"	20'-1"	48"x76"	13	14	15'-8"	16'-7"
					53"x83"	14	15	16'-10"	17'-9"
					58"x91"	15	16	18'-0"	18'-11"

CORRUGATED METAL PIPE

ROUND PIPE					ARCHED PIPE				
Pipe Dia.	s	n	L	La	Drain Size	s	n	L	La
*15"	2	3	2'-10"	3'-9"	*17"x13"	1	2	1'-8"	2'-7"
*18"	3	4	4'-0"	4'-11"	*21"x15"	2	3	2'-10"	3'-9"
*24"	5	6	6'-4"	7'-3"	*28"x20"	4	5	5'-2"	6'-1"
30"	7	8	8'-8"	9'-7"	35"x24"	5	6	6'-4"	7'-3"
36"	8	9	9'-10"	10'-9"	42"x29"	6	7	7'-6"	8'-5"
42"	10	11	12'-2"	13'-1"	49"x33"	7	8	8'-8"	9'-7"
48"	12	13	14'-6"	15'-5"	57"x38"	9	10	11'-0"	11'-11"
54"	14	15	16'-10"	17'-9"	64"x43"	10	11	12'-2"	13'-1"
60"	15	16	18'-0"	18'-11"	71"x47"	12	13	14'-6"	15'-5"

* See Note 5

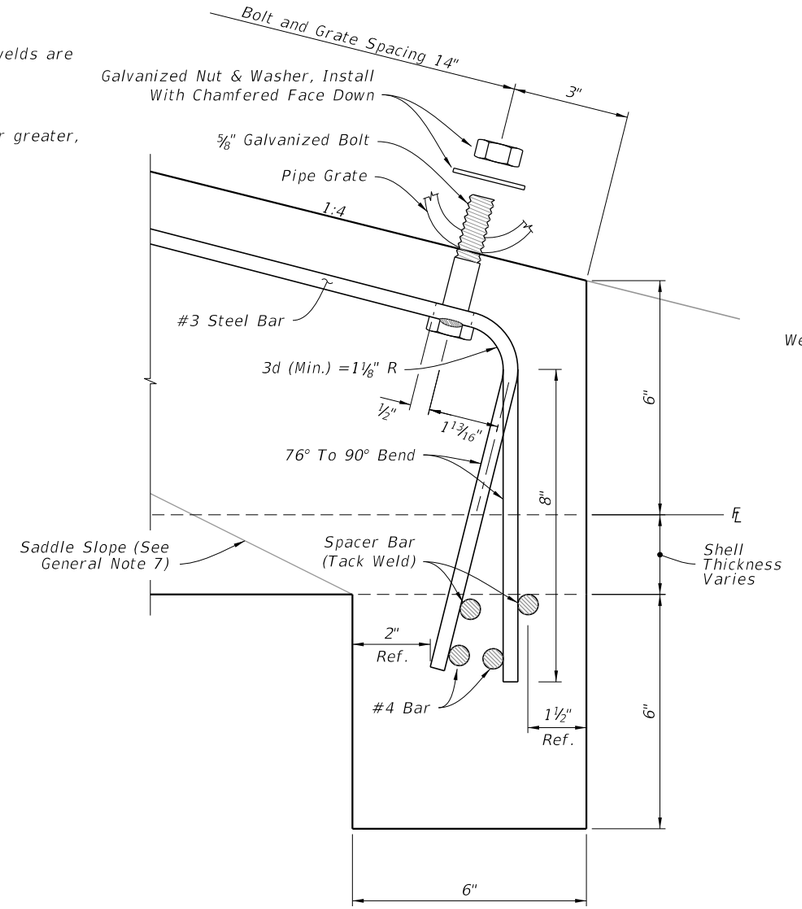

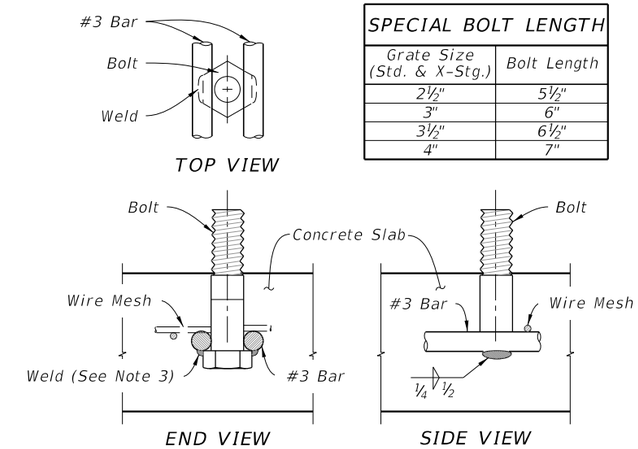

SPECIAL BOLT LENGTH

Grate Size (Std. & X-Stg.)	Bolt Length
2½"	5½"
3"	6"
3½"	6½"
4"	7"

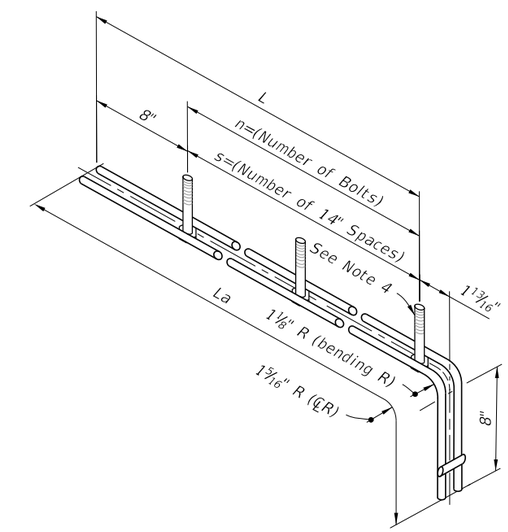

MULTIPLE FASTENER UNIT DETAIL
(For Single and Multiple Pipes)

NOTE:

1. Install intermediate slot and fastener for multiple drain pipes only.

Options for top opening:
a. 4" of 6" mill head cut, 1" deep
b. 2" diameter drilled hole
c. 1 1/16" x 2" slot

Bottom opening: 1 1/16" x 2" slot.

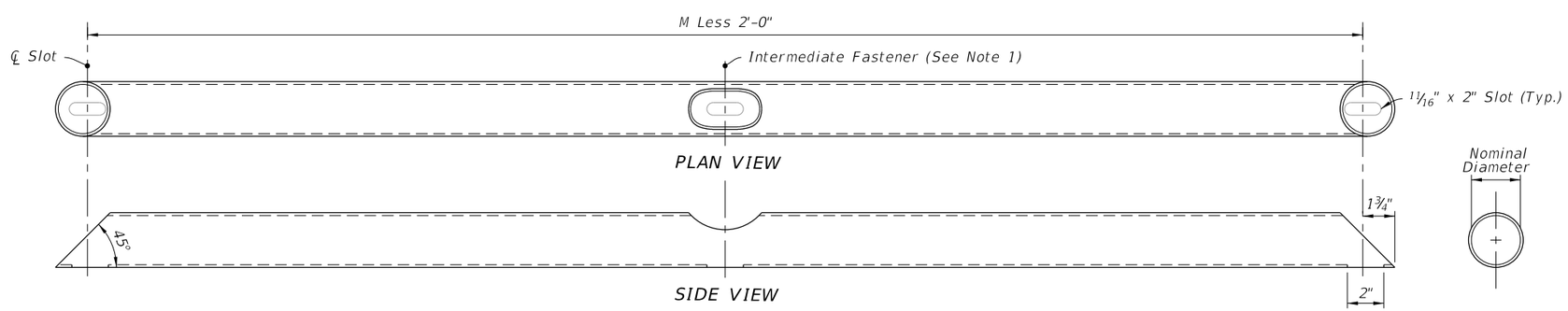

GRATE DETAIL
(For Single and Multiple Pipes)

FASTENER UNIT AND GRATE DETAILS

LAST REVISION	REVISION	DESCRIPTION:					
11/01/20			FDOT	FY 2022-23 STANDARD PLANS	SIDE DRAIN MITERED END SECTION	INDEX 430-022	SHEET 7 of 7

9/21/2021 1:47:43 PM

GENERAL NOTES:

1. Use Class II concrete.

2. Reinforcing steel is either Grade 40 or 60.

3. Endwalls may be cast in place or precast concrete. (Additional reinforcement necessary for handling precast units will be determined by the Contractor or the supplier).

4. Chamfer all exposed edges and corners to ¾".

5. Endwall dimensions, locations and positions are for round and elliptical concrete pipe and for round and pipe-arch corrugated metal pipe. Round concrete pipe shown.

6. On outfall ditches with side slopes flatter than 1:1.5 provide 20' transitions from the endwall to the flatter side slopes, right of way permitting.

7. Construct front slope and ditch transitions in accordance with Index 430-001.

8. Quantities shown are for estimating purposes only.

TABLE OF CONTENTS:

Sheet	Description
1	General Notes and Contents
2	Concrete Endwall Details
3	Concrete and Metal Pipe Tables
4	Spacing For Multiple Pipes

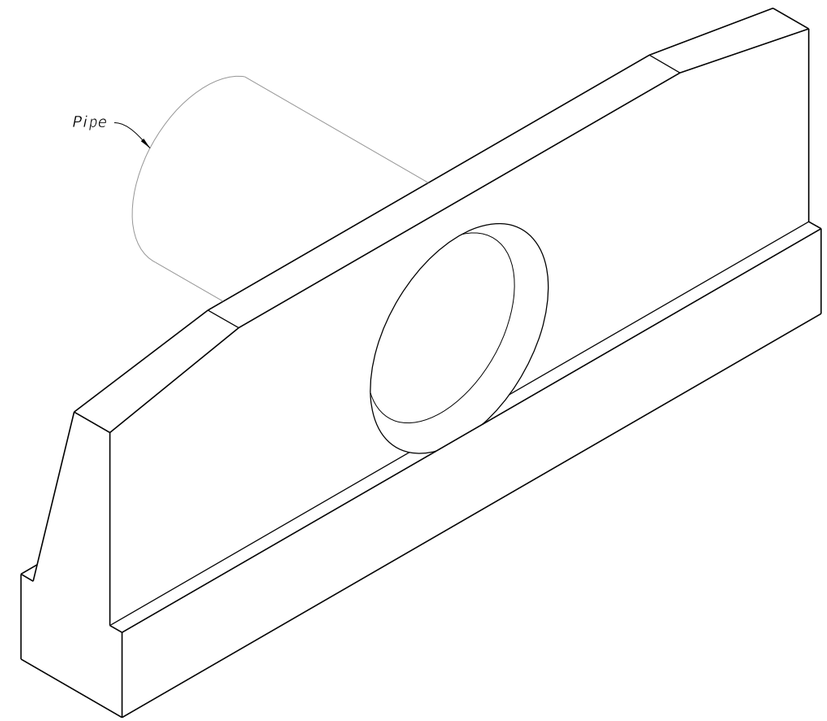

STRAIGHT CONCRETE ENDWALL

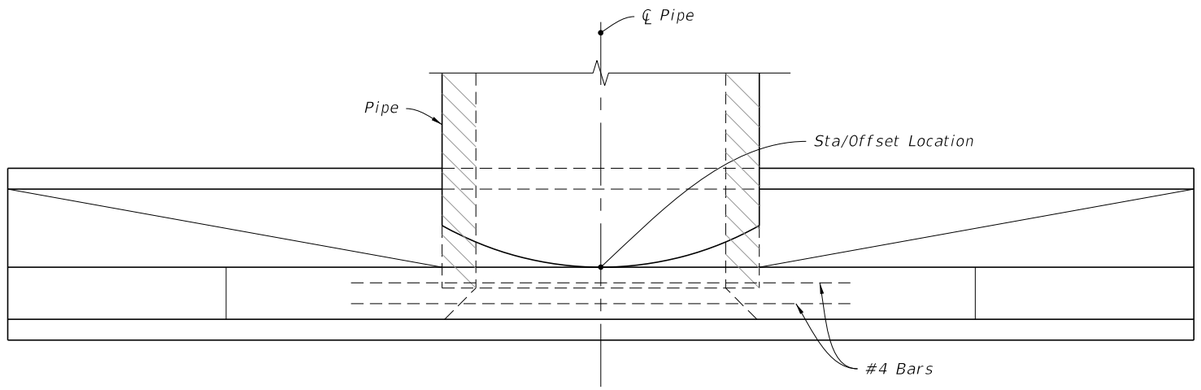

PLAN

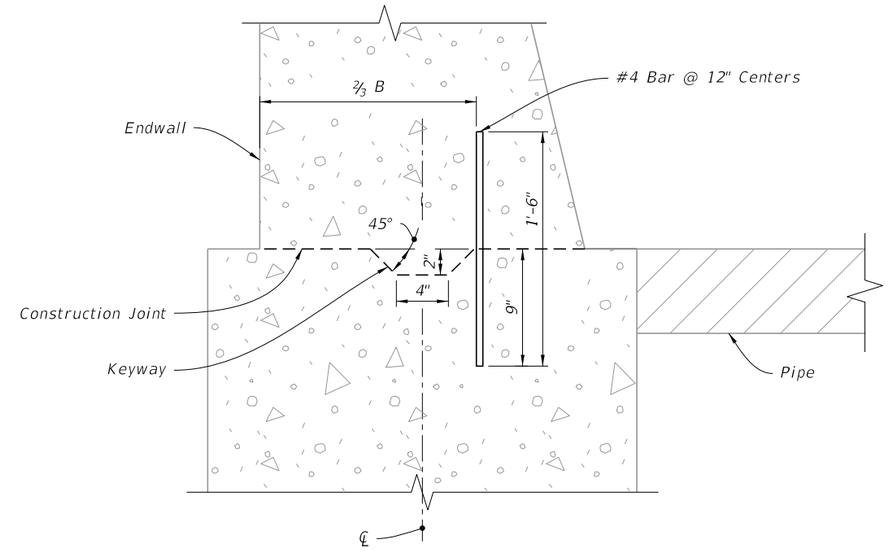

NOTE: Keyway and Dowels are required for optional construction joint.

DETAIL "A"

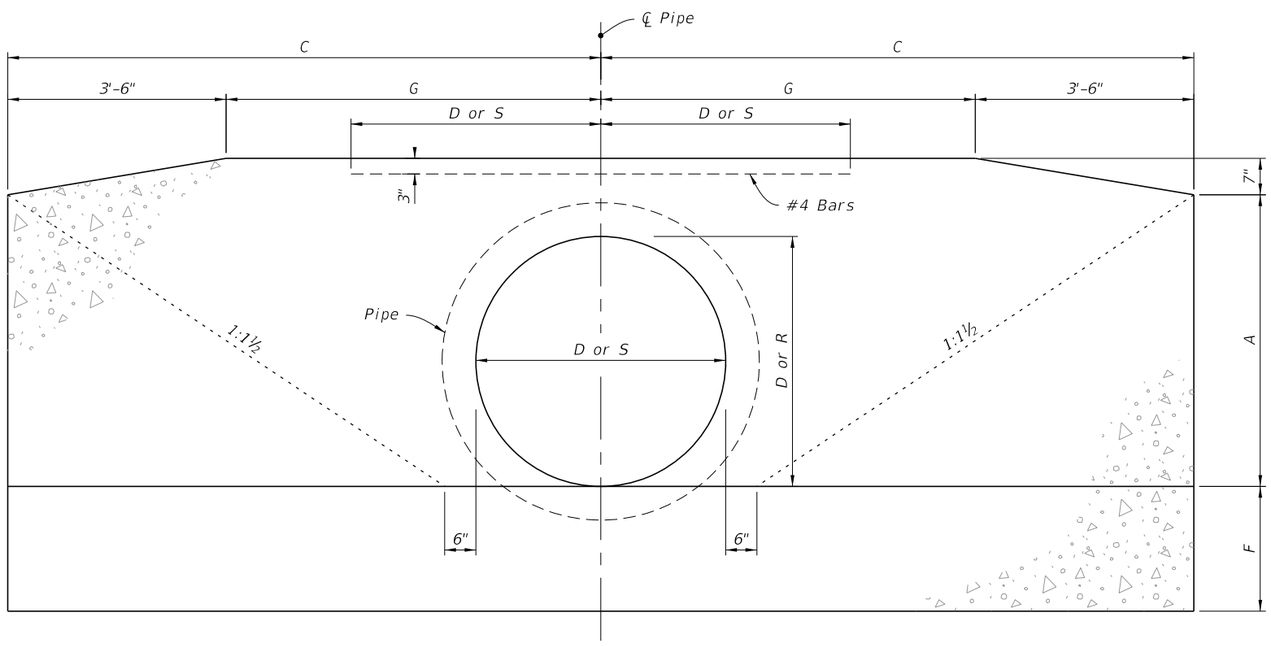

FRONT ELEVATION

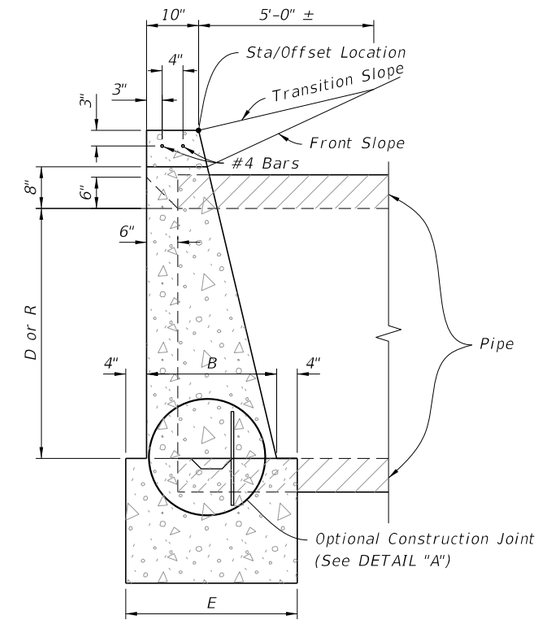

SIDE ELEVATION

9/21/2021 1:47:45 PM

CONCRETE ENDWALL DETAILS

LAST REVISION	REVISION	DESCRIPTION:			INDEX	SHEET
11/01/19			FY 2022-23 STANDARD PLANS	STRAIGHT CONCRETE ENDWALLS SINGLE AND MULTIPLE PIPE	430-030	2 of 4

ROUND CONCRETE AND CORRUGATED METAL PIPE

Pipe	Dia. D	Opening Area (SF) Number Of Pipes 1	2	3	4	Dimensions A	B	C	E	F	G	Y	X 0°	15°	30°	45°	Class II Concrete (CY) Number Of Pipe And Skew Angle Of Pipe (α) Single 0°	Double 0°	15°	30°	45°	Triple 0°	15°	30°	45°	Quadruple 0°	15°	30°	45°	Dia. D
Concrete	15"	1.23	2.46	3.69	4.92	1'-11"	1'-2"	4'-0"	1'-10"	1'-2"	0'-6"	2'-7"	2'-7"	2'-8"	3'-0"	3'-8"	1.23	1.59	1.60	1.65	1.74	1.94	1.96	2.05	2.23	2.30	2.34	2.47	2.74	15"
	18"	1.77	3.54	5.31	7.08	2'-2"	1'-3"	4'-6"	1'-11"	1'-3"	1'-0"	2'-10"	2'-10"	2'-11"	3'-3"	4'-0"	1.56	1.99	2.01	2.06	2.17	2.43	2.46	2.56	2.79	2.86	2.91	3.06	3.40	18"
	21"	2.41	4.82	7.23	9.64	2'-5"	1'-4"	5'-0"	2'-0"	1'-4"	1'-6"	3'-2"	3'-2"	3'-3"	3'-8"	4'-6"	1.97													21"
	24"	3.14	6.28	9.42	12.56	2'-8"	1'-4"	5'-6"	2'-0"	1'-4"	2'-0"	3'-5"	3'-5"	3'-6"	3'-11"	4'-10"	2.24	2.82	2.84	2.91	3.06	3.39	3.43	3.57	3.87	3.97	4.03	4.24	4.69	24"
	27"	3.98	7.96	11.94	15.92	2'-11"	1'-5"	6'-0"	2'-1"	1'-5"	2'-6"	3'-10"	3'-10"	4'-0"	4'-5"	5'-5"	2.73													27"
	30"	4.91	9.82	14.73	19.64	3'-2"	1'-6"	6'-6"	2'-2"	1'-6"	3'-0"	4'-3"	4'-3"	4'-5"	4'-11"	6'-0"	3.26	4.13	4.16	4.26	4.49	4.98	5.04	5.25	5.69	5.84	5.93	6.24	6.91	30"
	36"	7.07	14.14	21.21	28.28	3'-8"	1'-8"	7'-6"	2'-4"	1'-8"	4'-0"	5'-1"	5'-1"	5'-3"	5'-10"	7'-2"	4.53	5.73	5.77	5.92	6.23	6.92	7.00	7.29	7.91	8.13	8.26	8.69	9.62	36"
	42"	9.62	19.24	28.86	38.48	4'-2"	1'-10"	8'-6"	2'-6"	2'-0"	5'-0"	6'-0"	6'-0"	6'-3"	6'-11"	8'-6"	6.33	8.11	8.17	8.39	8.85	9.90	10.02	10.45	11.38	11.68	11.87	12.51	13.89	42"
	48"	12.57	25.14	37.71	50.28	4'-8"	2'-1"	9'-6"	2'-9"	2'-0"	6'-0"	6'-9"	6'-9"	7'-0"	7'-10"	9'-7"	8.15	10.40	10.48	10.75	11.33	12.64	12.80	13.34	14.50	14.89	15.13	15.93	17.68	48"
	54"	15.90	31.80	47.70	63.60	5'-2"	2'-6"	10'-6"	3'-2"	2'-3"	7'-0"	7'-8"	7'-8"	7'-11"	8'-10"	10'-10"	11.71	15.23	15.35	15.78	16.69	18.77	19.02	19.86	21.69	22.29	22.66	23.93	26.67	54"
Corrugated Metal	15"	1.23	2.46	3.69	4.92	1'-11"	1'-2"	4'-0"	1'-10"	1'-2"	0'-6"	2'-7"	2'-7"	2'-8"	3'-0"	3'-8"	1.24	1.62	1.63	1.68	1.78	1.99	2.02	2.11	2.30	2.37	2.41	2.75	2.84	15"
	18"	1.77	3.54	5.31	7.08	2'-2"	1'-3"	4'-6"	1'-11"	1'-3"	1'-0"	2'-10"	2'-10"	2'-11"	3'-3"	4'-0"	1.59	2.04	2.06	2.11	2.23	2.51	2.54	2.65	2.89	2.96	3.01	3.17	3.53	18"
	21"	2.41	4.82	7.23	9.64	2'-5"	1'-4"	5'-0"	2'-0"	1'-4"	1'-6"	3'-2"	3'-2"	3'-3"	3'-8"	4'-6"														21"
	24"	3.14	6.28	9.42	12.56	2'-8"	1'-4"	5'-6"	2'-0"	1'-4"	2'-0"	3'-5"	3'-5"	3'-6"	3'-11"	4'-10"	2.29	2.91	2.93	3.01	3.17	3.52	3.56	3.71	4.03	4.14	4.20	4.43	4.91	24"
	27"	3.98	7.96	11.94	15.92	2'-11"	1'-5"	6'-0"	2'-1"	1'-5"	2'-6"	3'-10"	3'-10"	4'-0"	4'-5"	5'-5"														27"
	30"	4.91	9.82	14.73	19.64	3'-2"	1'-6"	6'-6"	2'-2"	1'-6"	3'-0"	4'-3"	4'-3"	4'-5"	4'-11"	6'-0"	3.34	4.28	4.31	4.43	4.67	5.20	5.27	5.49	5.97	6.13	6.23	6.56	7.29	30"
	36"	7.07	14.14	21.21	28.28	3'-8"	1'-8"	7'-6"	2'-4"	1'-8"	4'-0"	5'-1"	5'-1"	5'-3"	5'-10"	7'-2"	4.64	5.95	6.00	6.15	6.49	7.25	7.34	7.65	8.33	8.57	8.71	9.18	10.20	36"
	42"	9.62	19.24	28.86	38.48	4'-2"	1'-10"	8'-6"	2'-6"	2'-0"	5'-0"	6'-0"	6'-0"	6'-3"	6'-11"	8'-6"	6.49	8.43	8.50	8.73	9.23	10.38	10.52	10.98	11.99	12.32	12.52	13.22	14.73	42"
	48"	12.57	25.14	37.71	50.28	4'-8"	2'-1"	9'-6"	2'-9"	2'-0"	6'-0"	6'-9"	6'-9"	7'-0"	7'-10"	9'-7"	8.38	10.85	10.94	11.23	11.87	13.34	13.51	14.11	15.39	15.82	16.08	16.97	18.90	48"
	54"	15.90	31.80	47.70	63.60	5'-2"	2'-6"	10'-6"	3'-2"	2'-3"	7'-0"	7'-8"	7'-8"	7'-11"	8'-10"	10'-10"	11.77	15.35	15.48	15.90	16.83	18.93	19.18	20.04	21.89	22.51	22.89	24.17	26.96	54"

ELLIPTICAL CONCRETE AND CORRUGATED METAL PIPE ARCH

Pipe	Rise R	Span S	Opening Area (SF) Number Of Pipes 1	2	3	4	Dimensions A	B	C	E	F	G	Y	X 0°	15°	30°	45°	Class II Concrete (CY) Number Of Pipe And Skew Angle Of Pipe (α) Single 0°	Double 0°	15°	30°	45°	Triple 0°	15°	30°	45°	Quadruple 0°	15°	30°	45°	Rise R	Span S	Approx. Equiv. Round
Concrete	12"	18"	1.3	2.6	3.9	5.2	1'-8"	1'-2"	3'-9"	1'-10"	1'-2"	0'-3"	2'-10"	2'-10"	2'-11"	3'-3"	4'-0"	1.09	1.45	1.46	1.51	1.60	1.80	1.82	1.91	2.09	2.16	2.20	2.33	2.60	12"	18"	15"
	14"	23"	1.8	3.6	5.4	7.2	1'-10"	1'-3"	4'-2½"	1'-11"	1'-3"	8½"	3'-5"	3'-5"	3'-6"	3'-11"	4'-10"	1.36	1.82	1.84	1.89	2.01	2.29	2.32	2.43	2.68	2.75	2.80	2.97	3.33	14"	23"	18"
	19"	30"	3.3	6.6	9.9	13.2	2'-3"	1'-4"	5'-1½"	2'-0"	1'-4"	1'-7½"	4'-2"	4'-2"	4'-4"	4'-10"	5'-11"	1.89	2.55	2.57	2.65	2.82	3.22	3.27	3.43	3.77	3.88	3.95	4.19	4.70	19"	30"	24"
	24"	38"	5.1	10.2	15.3	20.4	2'-8"	1'-5"	6'-3"	2'-1"	1'-5"	2'-9"	5'-2"	5'-2"	5'-4"	6'-0"	7'-4"	2.64	3.55	3.58	3.69	3.93	4.48	4.54	4.77	5.24	5.39	5.49	5.82	6.53	24"	38"	30"
	29"	45"	7.4	14.8	22.2	29.6	3'-1"	1'-6"	7'-0"	2'-2"	1'-6"	3'-6"	6'-0"	6'-0"	6'-3"	6'-11"	8'-6"	3.32	4.48	4.52	4.66	4.96	5.64	5.72	6.00	6.60	6.80	6.92	7.34	8.24	29"	45"	36"
	34"	53"	10.2	20.4	30.6	40.8	3'-6"	1'-7"	7'-11½"	2'-3"	1'-7"	4'-5½"	7'-1"	7'-1"	7'-4"	8'-2"	10'-0"	4.24	5.76	5.81	6.00	6.39	7.29	7.40	7.76	8.55	8.81	8.97	9.52	10.70	34"	53"	42"
	38"	60"	12.9	25.8	38.7	51.6	3'-10"	1'-8"	8'-9"	2'-4"	1'-8"	5'-3"	7'-11"	7'-11"	8'-2"	9'-2"	11'-2"	5.22	7.16	7.23	7.46	7.96	9.10	9.24	9.70	10.71	11.05	11.25	11.95	13.46	38"	60"	48"
	43"	68"	16.6	33.2	49.8	66.4	4'-3"	1'-10"	9'-8½"	2'-6"	1'-10"	6'-2½"	8'-10"	8'-10"	9'-2"	10'-2"	12'-6"	6.63	9.01	9.09	9.38	10.00	11.39	11.56	12.13	13.36	13.77	14.02	14.88	16.73	43"	68"	54"
	48"	76"	20.5	41.0	61.5	82.0	4'-8"	2'-1"	10'-8"	2'-9"	2'-0"	7'-2"	9'-9"	9'-9"	10'-1"	11'-3"	13'-9"	8.66	11.74	11.85	12.22	13.02	14.82	15.04	15.77	17.37	17.91	18.23	19.34	21.74	48"	76"	60"
	53"	83"	24.8	49.6	74.4	99.2	5'-1"	2'-6"	11'-7"	3'-2"	2'-6"	8'-1"	10'-7"	10'-7"	10'-11"	12'-3"	15'-0"	12.50	16.98	16.98	17.67	18.83	21.47	21.78	22.86	25.18	25.97	26.44	28.06	31.55	53"	83"	66"
	58"	91"	29.5	59.0	88.5	118.0	5'-6"	2'-10"	12'-6½"	3'-6"	2'-10"	9'-0½"	11'-4"	11'-4"	11'-9"	13'-1"	16'-0"	16.46	22.26	22.46	23.16	24.66	28.05	28.46	29.85	32.85	33.85	34.46	36.55	41.05	58"	91"	72"
Corrugated Metal	13"	17"	1.1	2.2	3.3	4.4	1'-9"	1'-2"	3'-10"	1'-10"	1'-2"	0'-4"	2'-6"	2'-6"	2'-7"	2'-11"	3'-6"	1.16	1.47	1.48	1.52	1.60	1.78	1.80	1.88	2.04	2.09	2.12	2.23	2.48	13"	17"	15"
	15"	21"	1.6	3.2	4.8	6.4	1'-11"	1'-2"	4'-3"	1'-10"	1'-2"	0'-9"	2'-10"	2'-10"	2'-11"	3'-3"	4'-0"	1.33	1.69	1.70	1.75	1.84	2.04	2.06	2.15	2.33	2.40	2.44	2.57	2.84	15"	21"	18"
	20"	28"	2.8	5.6	8.4	11.2	2'-4"	1'-3"	5'-2"	1'-11"	1'-3"	1'-8"	3'-5"	3'-5"	3'-6"	3'-11"	4'-10"	1.78	2.31	2.33	2.39	2.53	2.83	2.87	2.99	3.26	3.36	3.42	3.60	4.01	20"	28"	24"
	24"	35"	4.3	8.6	12.9	17.2	2'-8"	1'-4"	5'-11½"	2'-0"	1'-4"	2'-5½"	4'-0"	4'-0"	4'-2"	4'-7"	5'-8"	2.34	3.03	3.05	3.14	3.32	3.72	3.77	3.93	4.29	4.40	4.47	4.72	5.25	24"	35"	30"
	29"	42"	5.9	11.8	17.7	23.6	3'-1"	1'-5"	6'-10½"	2'-1"	1'-5"	3'-4½"	4'-9"	4'-9"	4'-11"	5'-6"	6'-9"	3.13	4.06	4.09	4.20	4.45	4.99	5.06	5.28	5.76	5.93	6.03	6.36	7.09	29"	42"	36"
	33"	49"	8.4	16.8	25.2	33.6	3'-5"	1'-6"	7'-8"	2'-2"	1'-6"	4'-2"	5'-6"	5'-6"	5'-8"	6'-4"	7'-9"	3.83	5.00	5.04	5.18	5.48	6.16	6.24	6.52	7.12	7.32	7.44	7.86	8.76	33"	49"	42"
	38"	57"	10.6	21.2	31.8	42.4	3'-10"	1'-7"	8'-7½"	2'-3"	1'-7"	5'-1½"	6'-4"	6'-4"	6'-7"	7'-4"	8'-11"	4.87	6.31	6.36	6.53	6.91	7.74	7.84	8.18	8.93	9.18	9.33	9.85	10.96	38"	57"	48"
	43"	64"	13.2	26.4	39.6	52.8	4'-3"	1'-8"	9'-6½"	2'-4"	1'-8"	6'-0½"	7'-1"	7'-1"	7'-4"	8'-2"	10'-0"	5.88	7.64	7.70	7.91	8.37	9.40	9.52	9.94	10.86	11.15	11.33	11.97	13.33	43"	64"	54"
	47"	71"	16.9	33.8	50.7	67.6	4'-7"	1'-10"	10'-4"	2'-6"	2'-0"	6'-10"	7'-10"	7'-10"	8'-1"	9'-1"	11'-1"	7.80	10.15	10.23	10.51	11.12	12.49	12.65	13.22	14.43	14.85	15.10	15.94	17.77	47"	71"	60"

NOTES:

1. Dimension X is calculated as: X = S*SEC α.

2. Select tabular quantities using skew values as follows:

End Skew to Pipe	Use Tabulated Value
0° to 5°	0°
6° to 15°	15°
16° to 30°	30°
31° or Over	45°

CONCRETE AND METAL PIPE TABLES

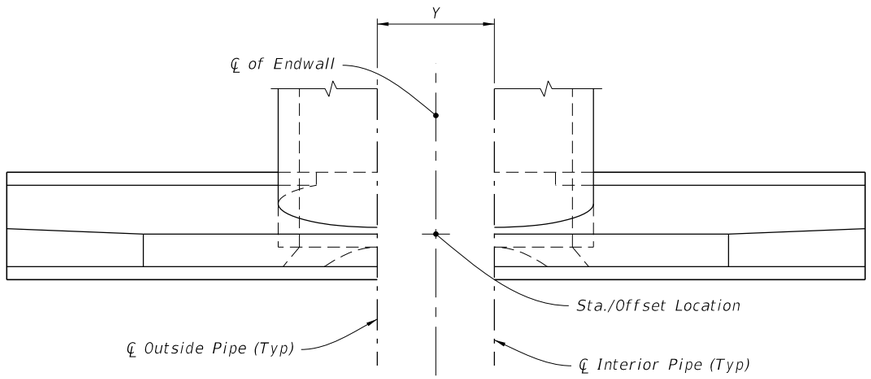

PLAN

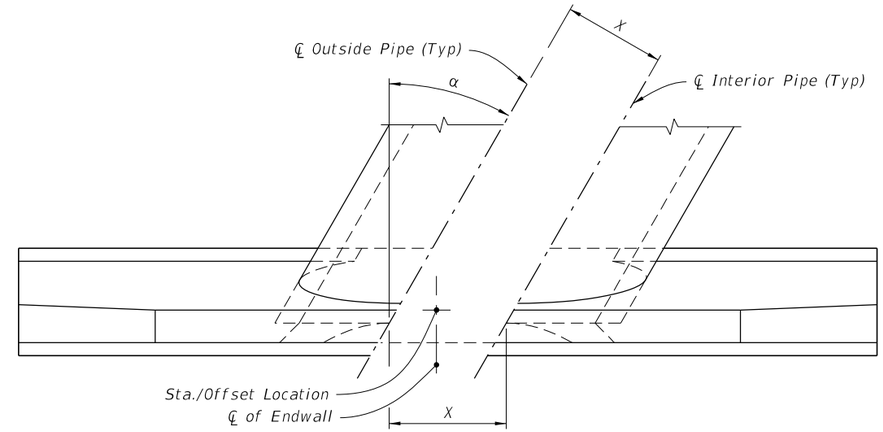

PLAN

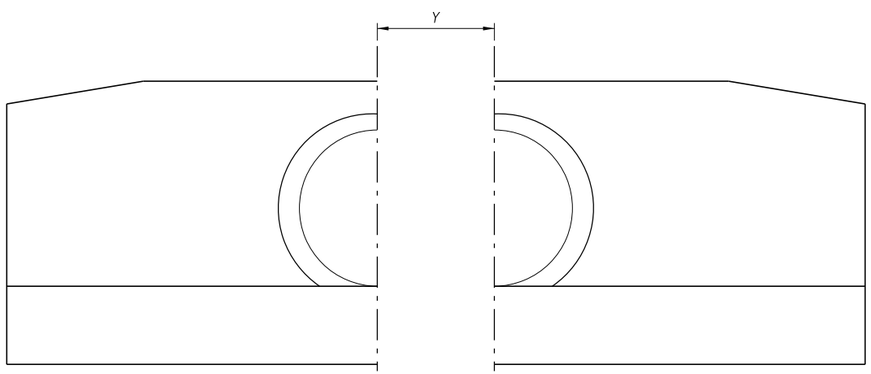

FRONT ELEVATION

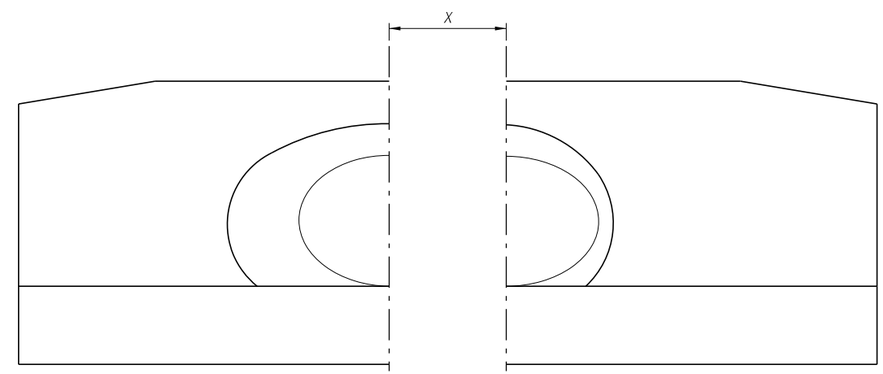

FRONT ELEVATION

NORMAL PIPE

SKEWED PIPE

(Multiple Pipe Shown, Single Pipe Similar)

LEGEND:

α Pipe Skew Angle
S Center to Center between pipes
X Center to Center along front of Headwall

SPACING FOR MULTIPLE PIPES

LAST REVISION	REVISION	DESCRIPTION:	FY 2022-23 STANDARD PLANS	STRAIGHT CONCRETE ENDWALLS SINGLE AND MULTIPLE PIPE	INDEX	SHEET
11/01/19					430-030	4 of 4

9/21/2021 1:47:47 PM

GENERAL NOTES:

1. Use Class II concrete.

2. Reinforcing steel is either Grade 40 or 60.

3. Endwalls may be cast in place or precast concrete. The Contractor or the Supplier will determine the additional reinforcement necessary for handling precast units.

4. Chamfer all exposed edges and corners ¾" unless otherwise shown.

5. Quantities shown are for estimating purposes only.

TABLE OF CONTENTS:

Sheet	Description
1	General Notes and Contents
2	Single 60" Pipe Endwall Details
3	Double 60" Pipe Endwall Details

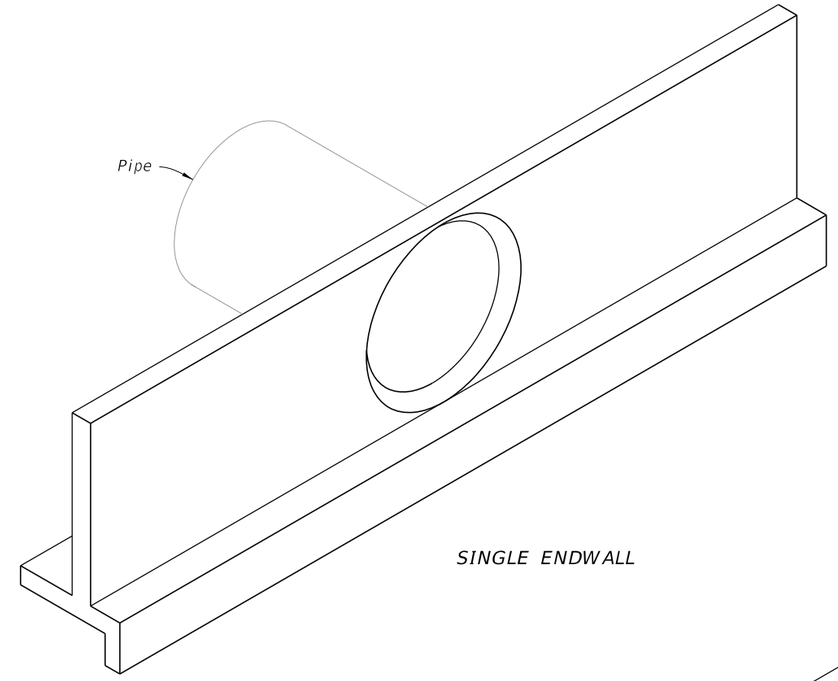

SINGLE ENDWALL

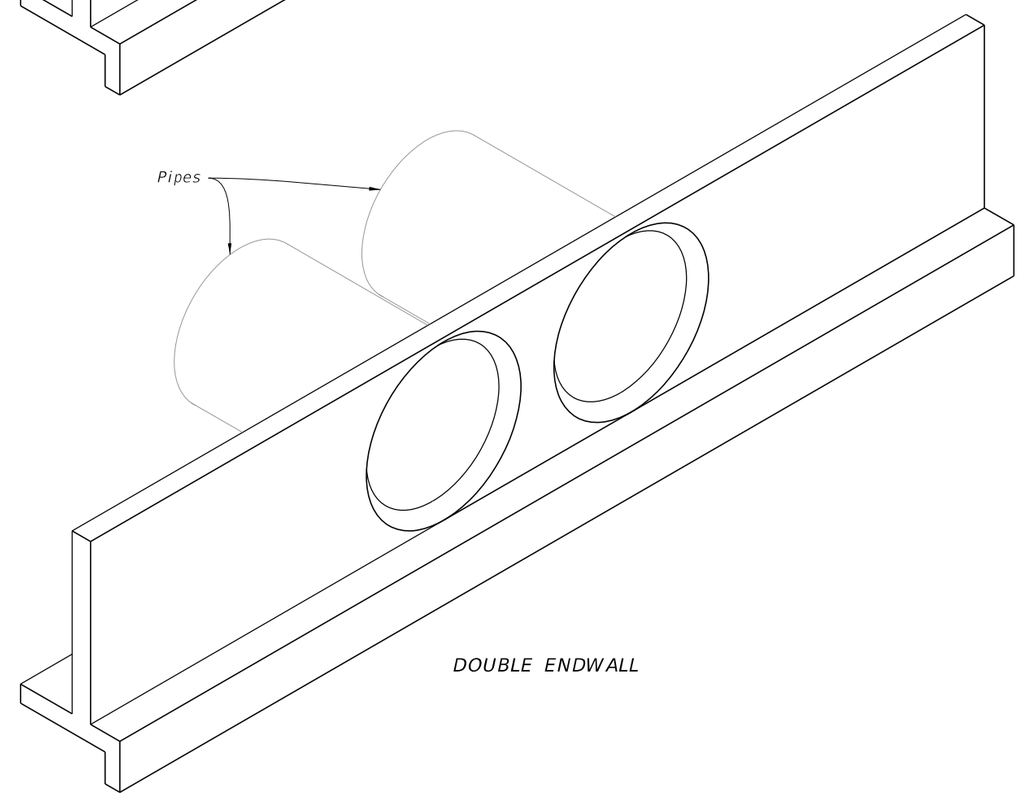

DOUBLE ENDWALL

STRAIGHT CONCRETE ENDWALLS 60" PIPE

9/21/2021 1:47:48 PM

LAST REVISION	REVISION	DESCRIPTION:			INDEX	SHEET
11/01/19			FY 2022-23 STANDARD PLANS	STRAIGHT CONCRETE ENDWALLS SINGLE AND DOUBLE 60" PIPE	430-031	1 of 3

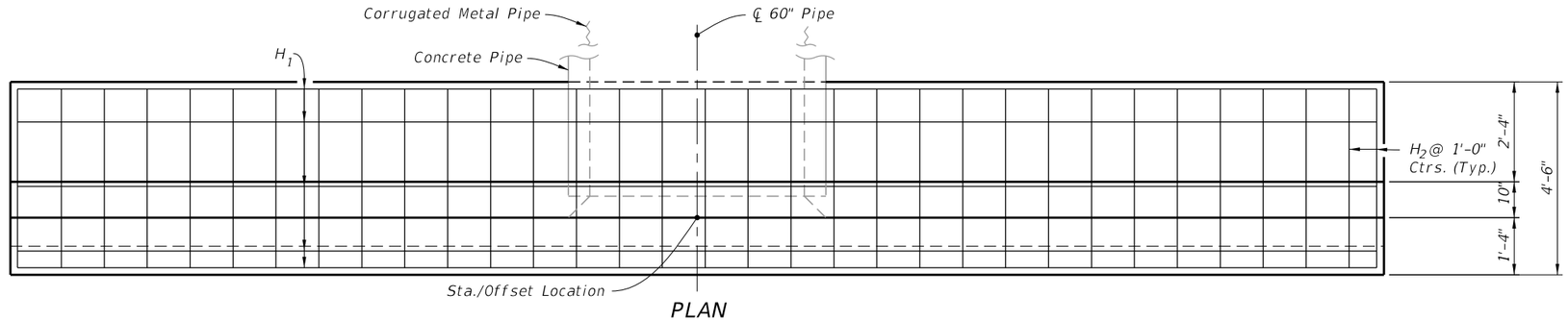

PLAN
(Showing Bars In Footing)

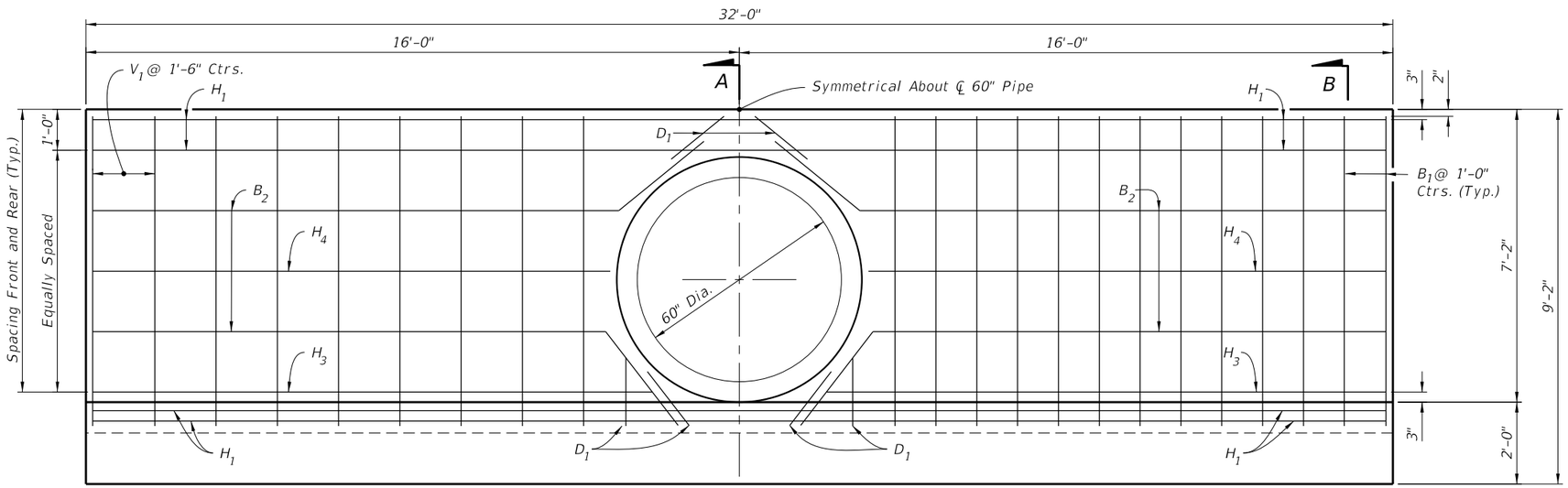

HALF ELEVATION
(Showing Bars in Front Face of Wall)

A

HALF ELEVATION
(Showing Bars in Back Face of Wall)

B

NOTES:

1. 2" clearance on all reinforcement, unless otherwise shown.
2. Cut and bend B_2 and B_3 Bars as shown.
3. All bar dimensions are out to out.

LEGEND:

H = Horizontal Bars B = Bent Bars

V = Vertical Bars D = Dowels or Diagonal Bars

SINGLE 60" PIPE ESTIMATED QUANTITIES			
ITEM	UNIT	RCP	CMP
Class II Concrete	Cu. Yd.	11.3	11.4
Reinforcing Steel	Lb.	695	695

BILL OF REINFORCING STEEL			
MARK	SIZE	NO. REQD.	LENGTH
H_1	4	9	31'-8"
H_2	4	32	4'-2"
H_3	4	4	13'-9"
H_4	4	4	12'-4"
V_1	4	18	7'-6"
B_1	4	26	9'-4"
B_2	4	4	31'-8"
D_1	4	8	1'-8"

BAR B_1
BENDING DIAGRAM

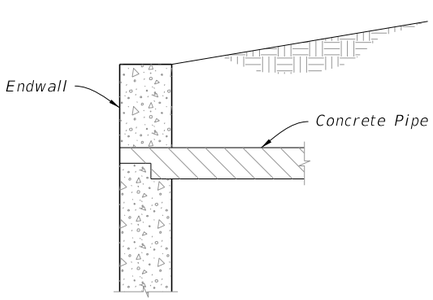

DETAIL "A"
(Concrete Pipe Optional Entrance)

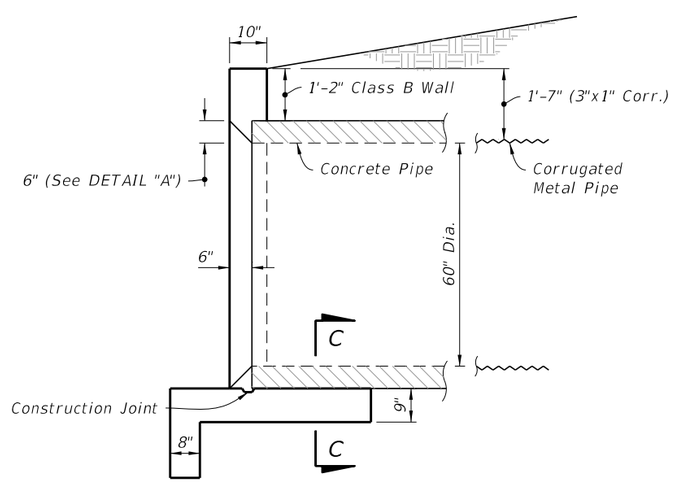

SECTION A-A
(Rebar Not Shown)

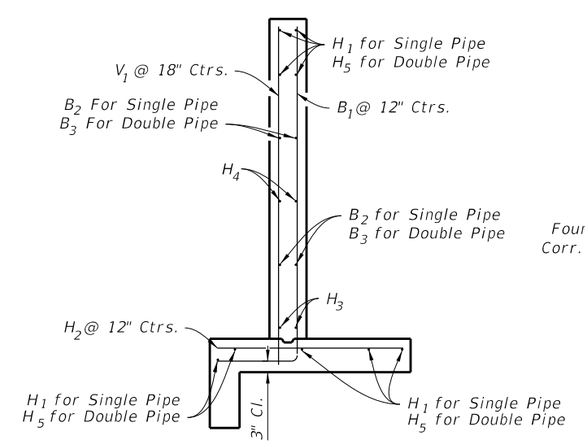

SECTION B-B
(Typical Section)

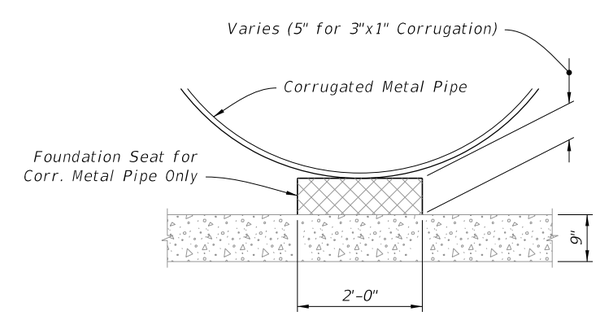

SECTION C-C

SINGLE 60" PIPE ENDWALL DETAILS

9/21/2021 1:47:48 PM

LAST REVISION	REVISION	DESCRIPTION:				
11/01/19			FY 2022-23 STANDARD PLANS	STRAIGHT CONCRETE ENDWALLS SINGLE AND DOUBLE 60" PIPE	INDEX 430-031	SHEET 2 of 3

NOTES:

1. 2" clearance on all reinforcement, unless otherwise shown.
2. Cut and bend B_3 Bars as shown.
3. All bar dimensions are out to out.

LEGEND:

H = Horizontal Bars

V = Vertical Bars

B = Bent Bars

D = Dowels or Diagonal Bars

DOUBLE 60" PIPE ESTIMATED QUANTITIES

ITEM	UNIT	RCP	CMP
Class II Concrete	Cu. Yd.	13.7	13.8
Reinforcing Steel	Lb.	824	824

BILL OF REINFORCING STEEL

MARK	SIZE	NO. REQD.	LENGTH
H_2	4	41	4'-2"
H_3	4	4	13'-9"
H_5	4	9	40'-2"
H_6	4	4	12'-6"
H_7	4	2	2'-2"
V_1	4	20	7'-6"
B_1	4	29	9'-4"
B_3	4	8	15'-0"
B_4	4	4	6'-0"
D_1	4	16	1'-8"

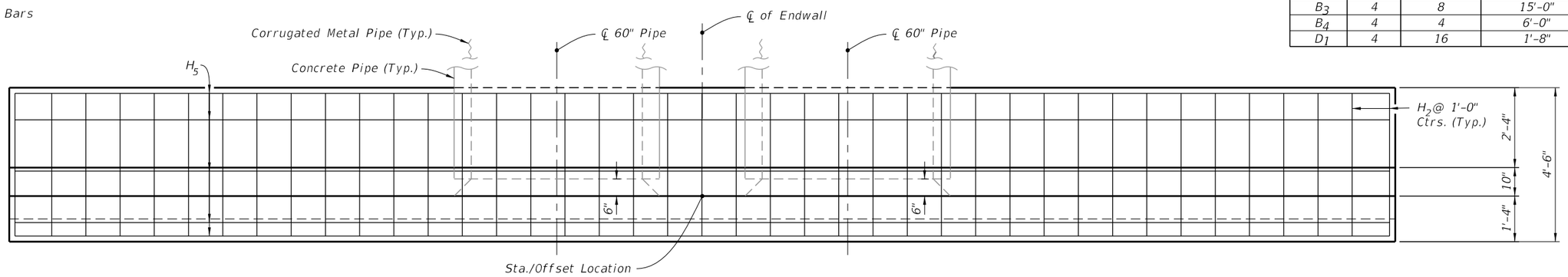

PLAN
(Showing Bars In Footing)

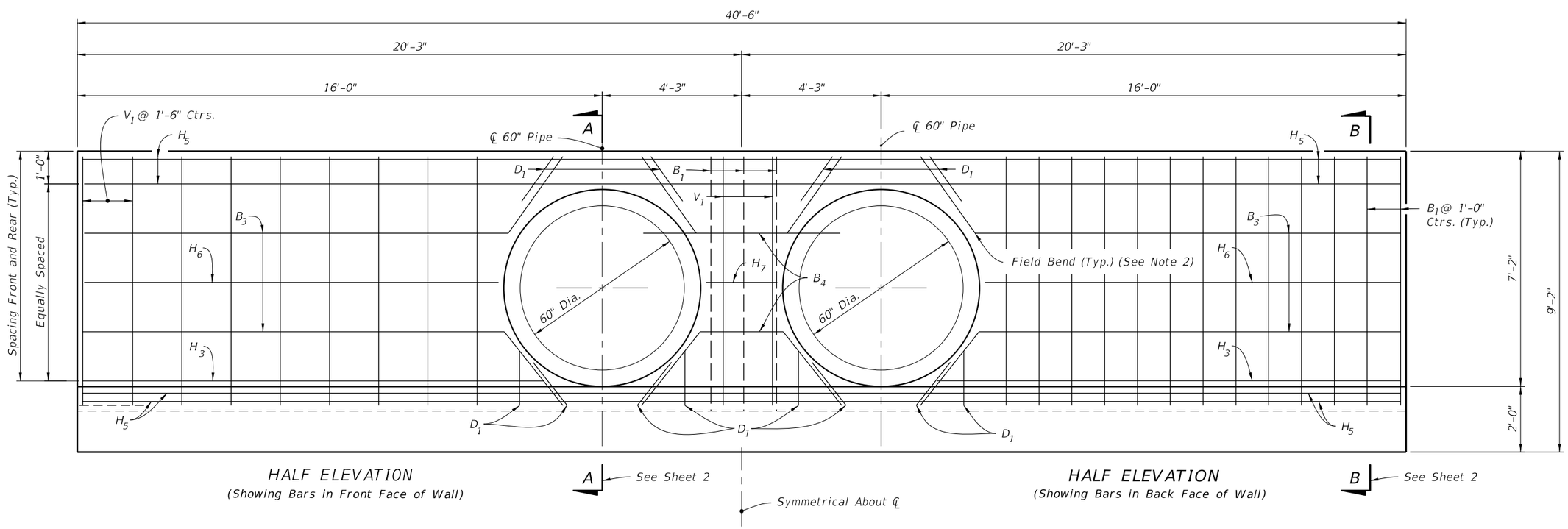

HALF ELEVATION
(Showing Bars in Front Face of Wall)

HALF ELEVATION
(Showing Bars in Back Face of Wall)

DOUBLE 60" PIPE ENDWALL DETAILS

LAST REVISION	REVISION	DESCRIPTION:			INDEX	SHEET
11/01/19			FY 2022-23 STANDARD PLANS	STRAIGHT CONCRETE ENDWALLS SINGLE AND DOUBLE 60" PIPE	430-031	3 of 3

9/21/2021 1:47:49 PM

GENERAL NOTES:

1. Use Class II concrete.

2. Reinforcing steel is either Grade 40 or 60.

3. Endwalls may be cast in place or precast concrete. The Contractor or the Supplier will determine the additional reinforcement necessary for handling precast units.

4. Chamfer all exposed edges and corners ¾" unless otherwise shown.

5. Quantities shown are for estimating purposes only.

TABLE OF CONTENTS:

Sheet	Description
1	General Notes and Contents
2	Single 66" Pipe Endwall Details
3	Double 66" Pipe Endwall Details

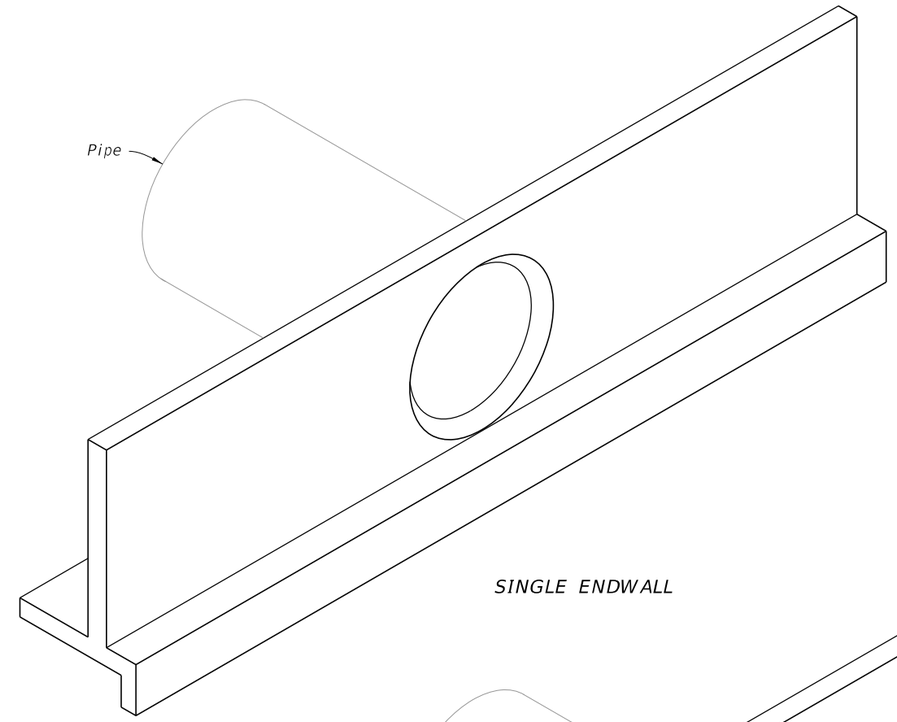

SINGLE ENDWALL

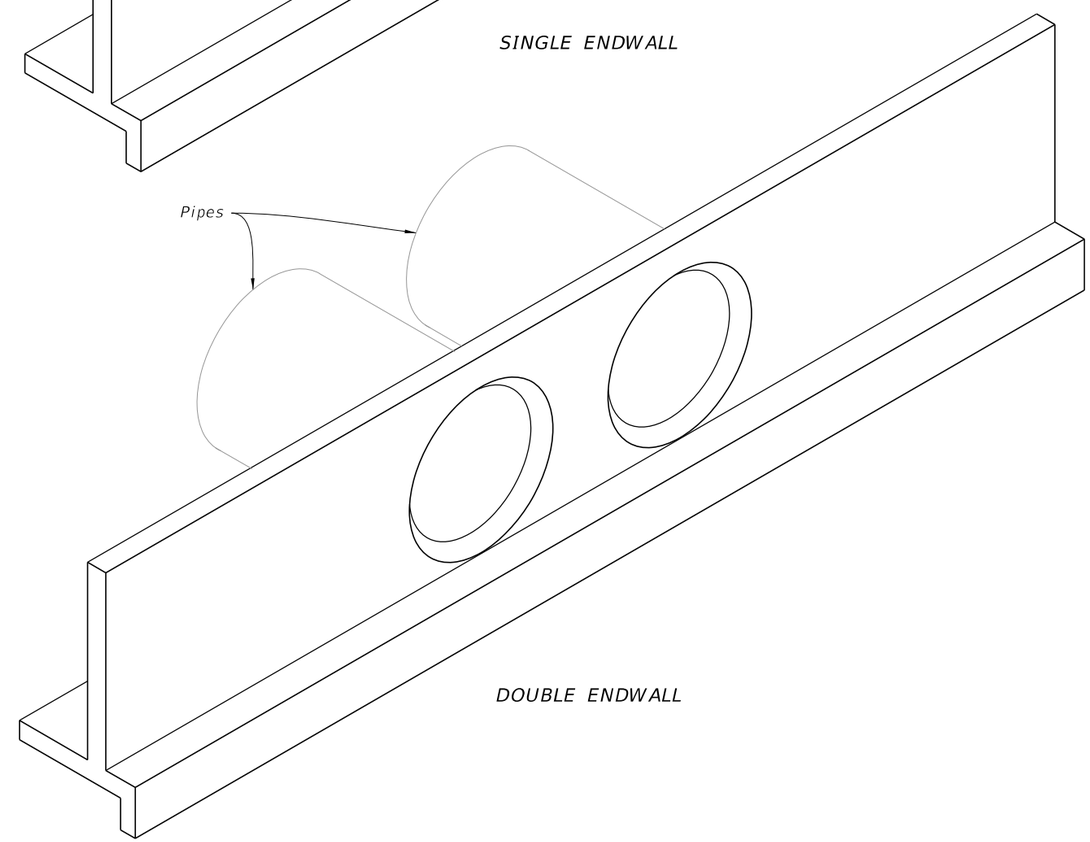

DOUBLE ENDWALL

STRAIGHT CONCRETE ENDWALLS 66" PIPE

9/21/2021 1:47:50 PM

LAST REVISION	REVISION	DESCRIPTION:			INDEX	SHEET
11/01/19			FY 2022-23 STANDARD PLANS	STRAIGHT CONCRETE ENDWALLS SINGLE AND DOUBLE 66" PIPE	430-032	1 of 3

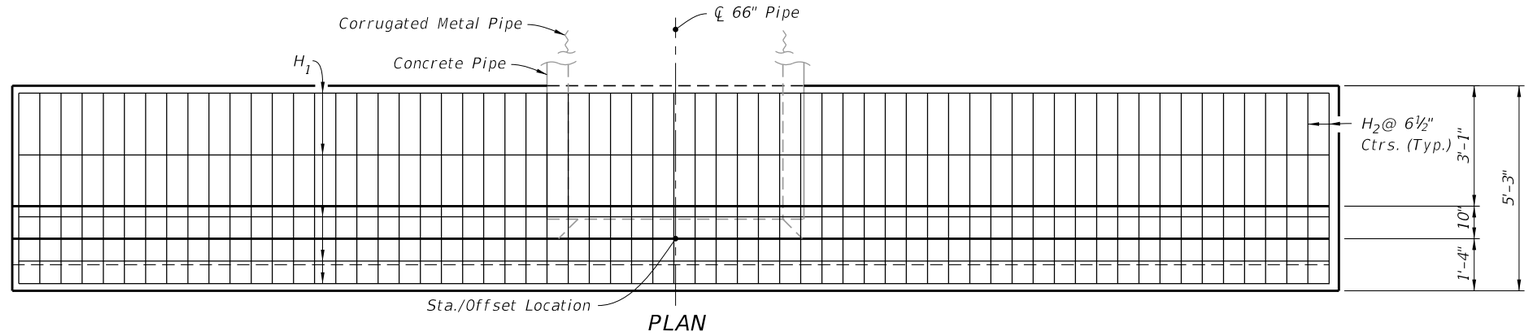

PLAN
(Showing Bars In Footing)

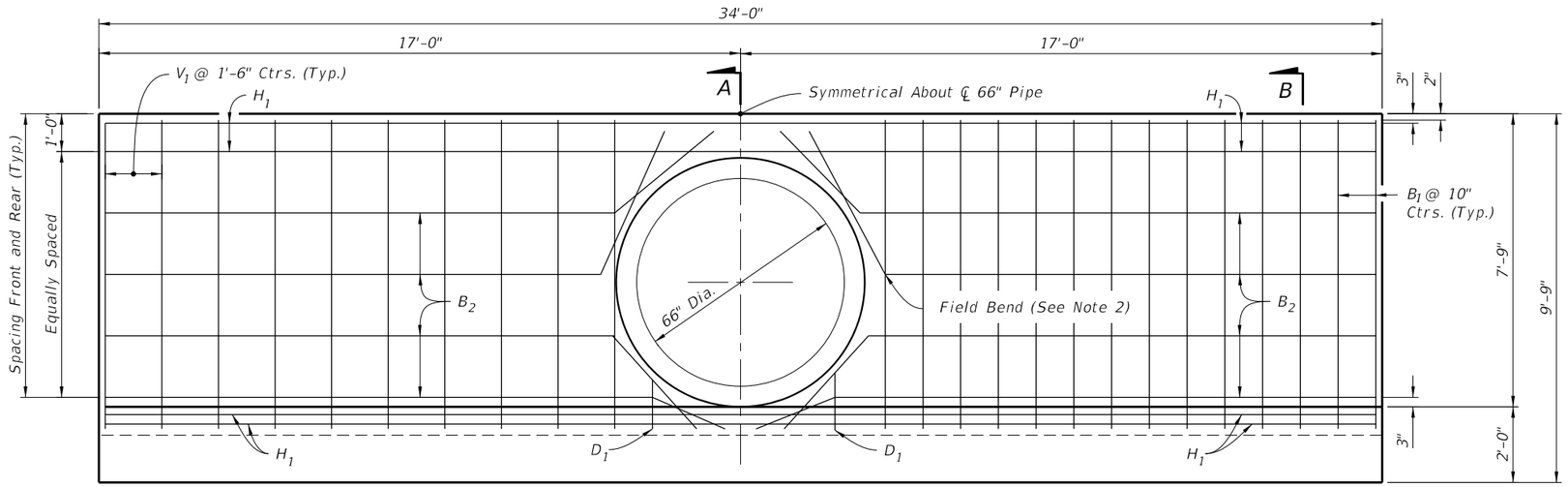

HALF ELEVATION
(Showing Bars in Front Face of Wall)

A

HALF ELEVATION
(Showing Bars in Back Face of Wall)

B

NOTES:

1. 2" clearance on all reinforcement, unless otherwise shown.
2. Cut and bend B_2 Bars as shown.
3. All bar dimensions are out to out.

LEGEND:

H = Horizontal Bars B = Bent Bars

V = Vertical Bars D = Dowels or Diagonal Bars

SINGLE 66" PIPE ENDWALL ESTIMATED QUANTITIES

ITEM	UNIT	RCP	CMP
Class II Concrete	Cu. Yd.	13.2	13.3
Reinforcing Steel	Lb.	1,170	1,170

BILL OF REINFORCING STEEL

MARK	SIZE	NO. REQD.	LENGTH
H_1	4	9	33'-8"
H_2	5	63	4'-11"
V_1	4	20	8'-1"
B_1	5	34	9'-11"
B_2	4	8	33'-8"
D_1	4	4	1'-8"

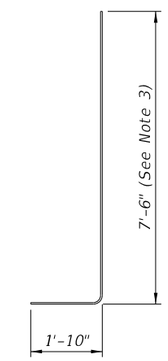

BAR B_1
BENDING DIAGRAM

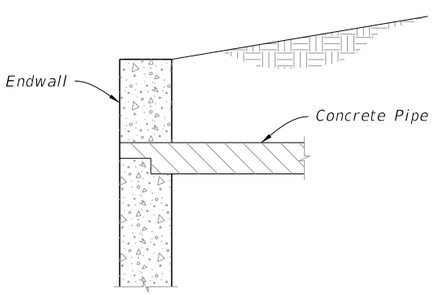

DETAIL "A"
(Concrete Pipe Optional Entrance)

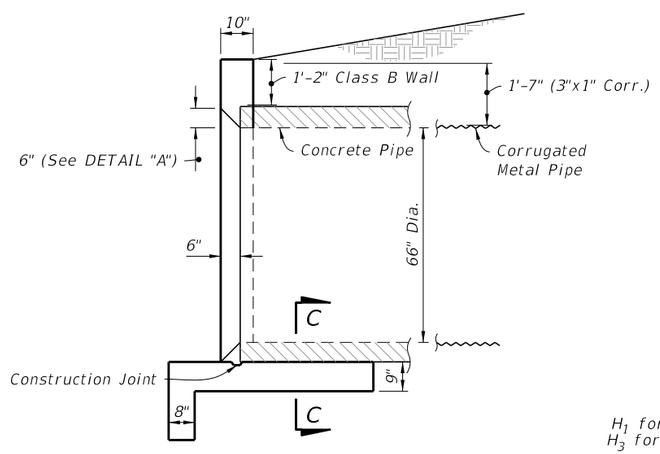

SECTION A-A
(Rebar Not Shown)

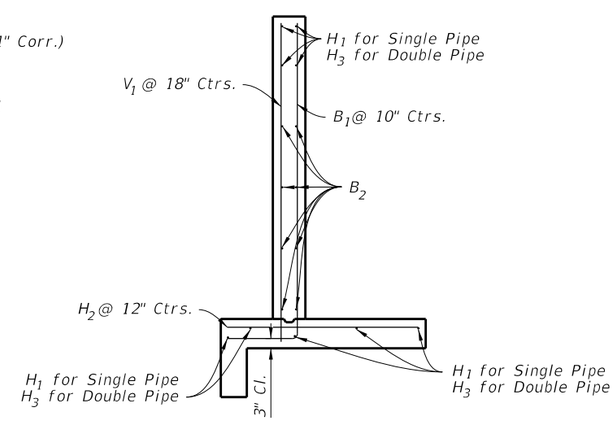

SECTION B-B
(Typical Section)

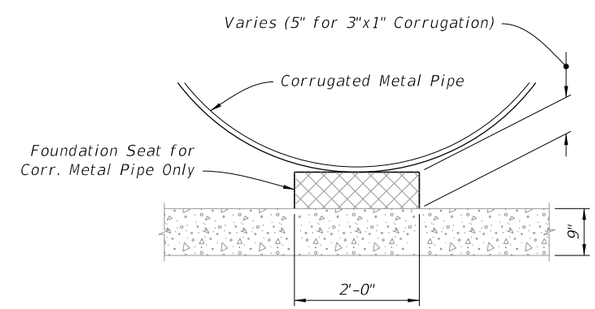

SECTION C-C

SINGLE 66" PIPE ENDWALL DETAILS

9/21/2021 1:47:50 PM

LAST REVISION	REVISION	DESCRIPTION:			INDEX	SHEET
11/01/19			FY 2022-23 STANDARD PLANS	STRAIGHT CONCRETE ENDWALLS SINGLE AND DOUBLE 66" PIPE	430-032	2 of 3

NOTES:

1. 2" clearance on all reinforcement, unless otherwise shown.
2. Cut and bend B_3 Bars as shown.
3. All bar dimensions are out to out.

LEGEND:

H = Horizontal Bars

V = Vertical Bars

B = Bent Bars

D = Dowels or Diagonal Bars

DOUBLE 66" PIPE ENDWALL ESTIMATED QUANTITIES

ITEM	UNIT	RCP	CMP
Class II Concrete	Cu. Yd.	16.0	16.2
Reinforcing Steel	Lb.	1,406	1,406

BILL OF REINFORCING STEEL

MARK	SIZE	NO. REQD.	LENGTH
H_2	5	80	4'-11"
H_3	4	9	42'-8"
V_1	4	22	8'-1"
B_1	5	37	9'-11"
B_3	4	8	42'-8"
D_1	4	8	1'-8"

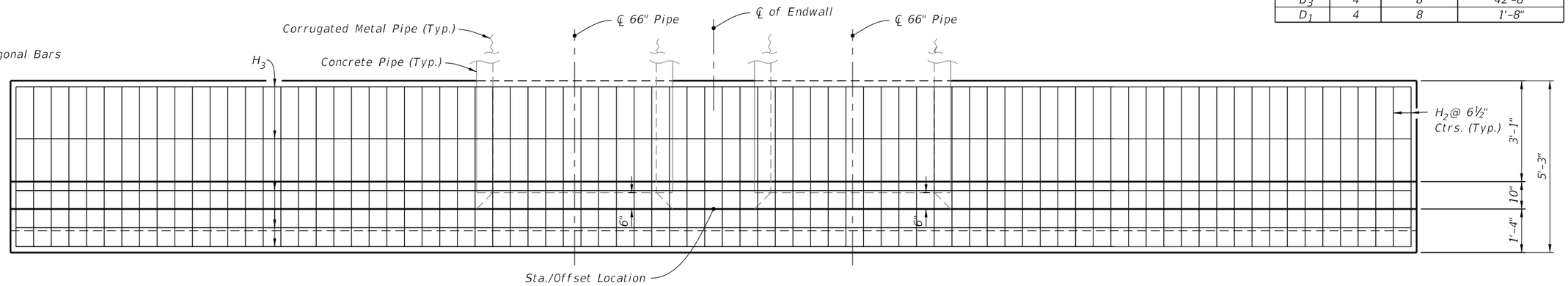

PLAN
(Showing Bars In Footing)

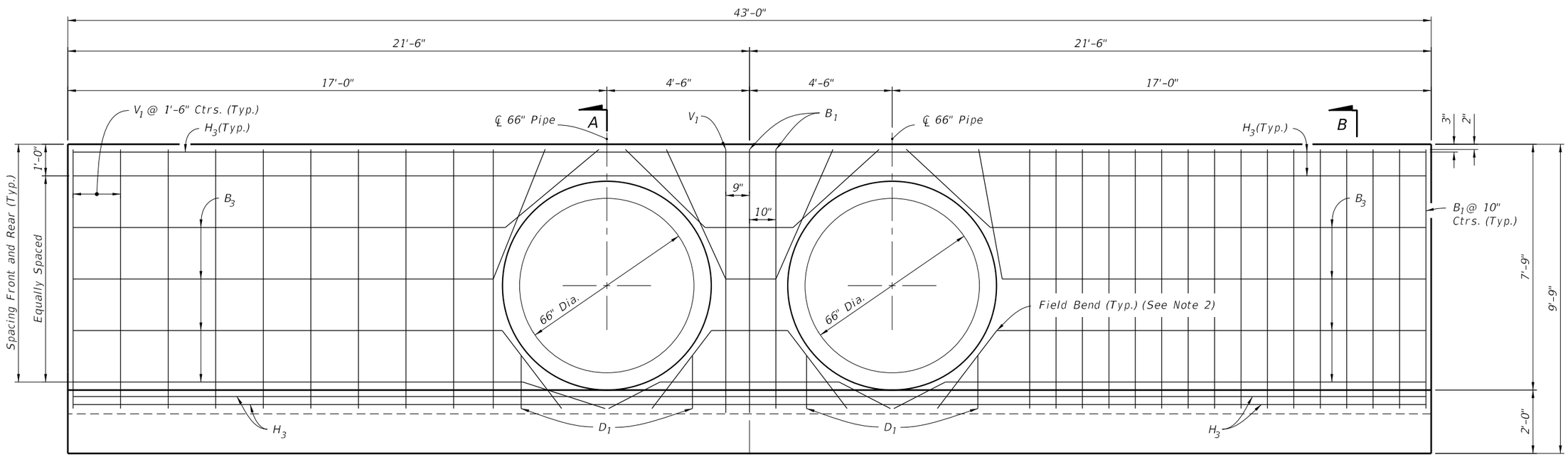

HALF ELEVATION
(Showing Bars in Front Face of Wall)

HALF ELEVATION
(Showing Bars in Back Face of Wall)

DOUBLE 66" PIPE ENDWALL DETAILS

LAST REVISION	REVISION	DESCRIPTION:			INDEX	SHEET
11/01/19			FDOT FY 2022-23 STANDARD PLANS	STRAIGHT CONCRETE ENDWALLS SINGLE AND DOUBLE 66" PIPE	430-032	3 of 3

9/21/2021 1:47:51 PM

GENERAL NOTES:

1. Use Class II concrete.

2. Reinforcing steel is either Grade 40 or 60.

3. Endwalls may be cast in place or precast concrete. The Contractor or the Supplier will determine the additional reinforcement necessary for handling precast units.

4. Chamfer all exposed edges and corners ¾" unless otherwise shown.

5. Quantities shown are for estimating purposes only.

TABLE OF CONTENTS:

Sheet	Description
1	General Notes and Contents
2	Single 72" Pipe Endwall Details
3	Double 72" Pipe Endwall Details

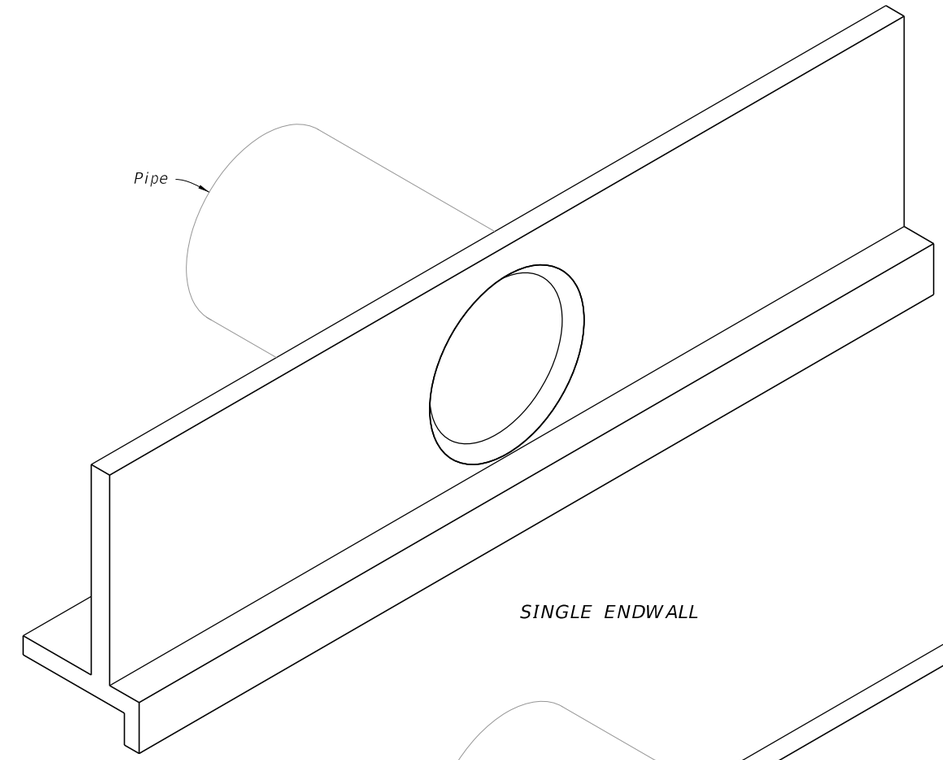

SINGLE ENDWALL

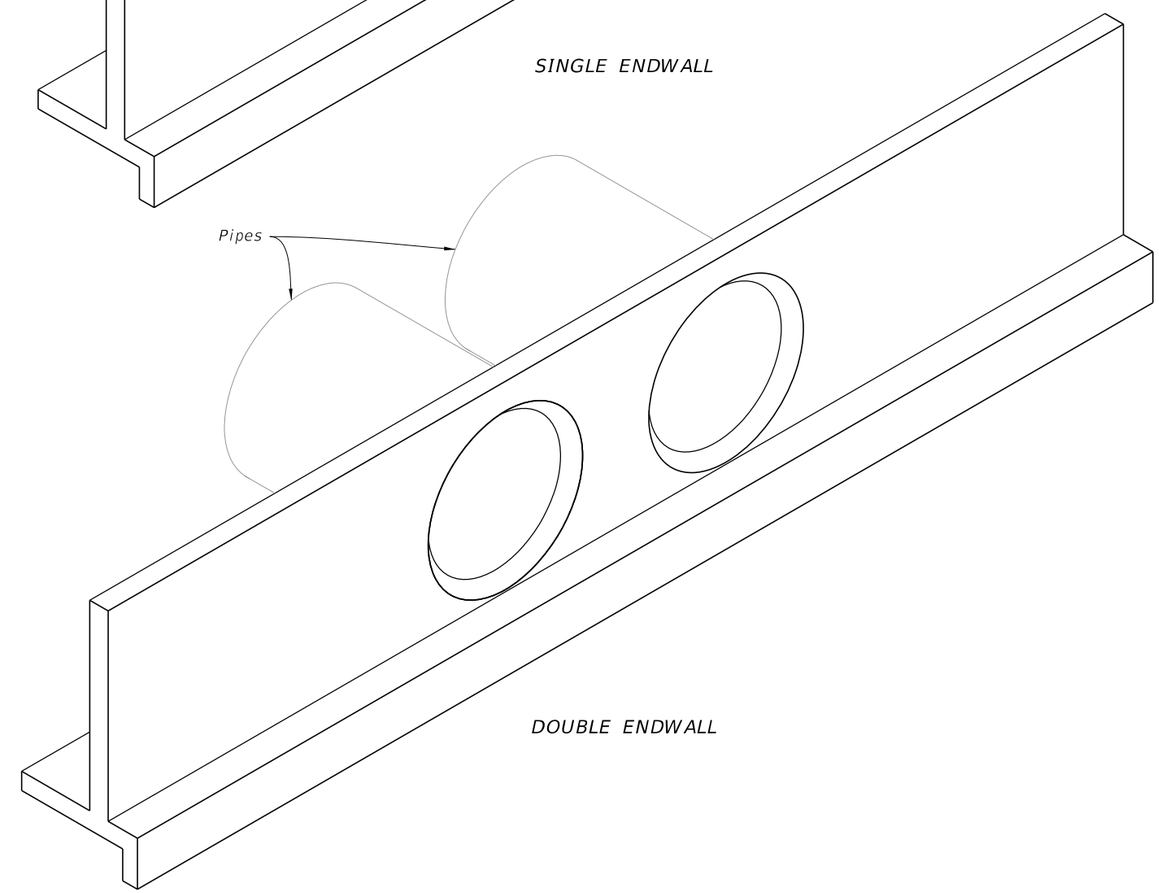

DOUBLE ENDWALL

STRAIGHT CONCRETE ENDWALLS 72" PIPE

9/21/2021 1:47:52 PM

LAST REVISION	REVISION	DESCRIPTION:			INDEX	SHEET
11/01/18			FY 2022-23 STANDARD PLANS	STRAIGHT CONCRETE ENDWALLS SINGLE AND DOUBLE 72" PIPE	430-033	1 of 3

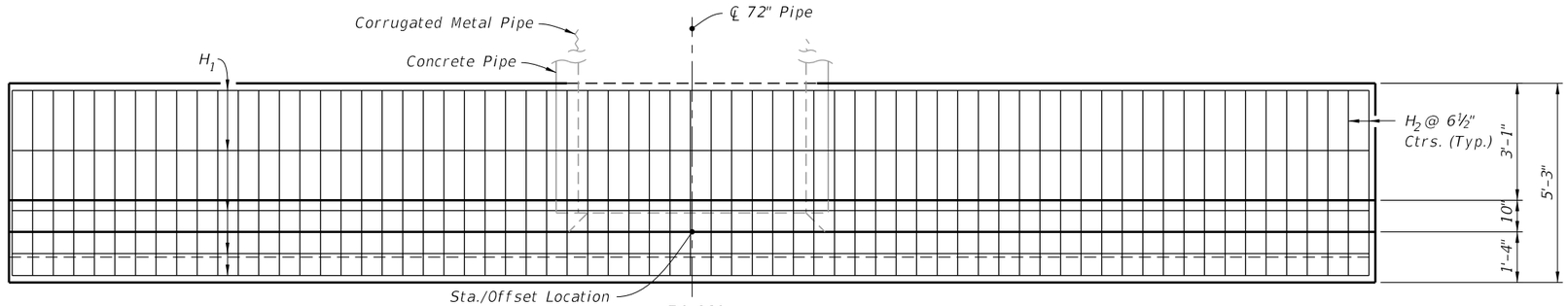

PLAN
(Showing Bars In Footing)

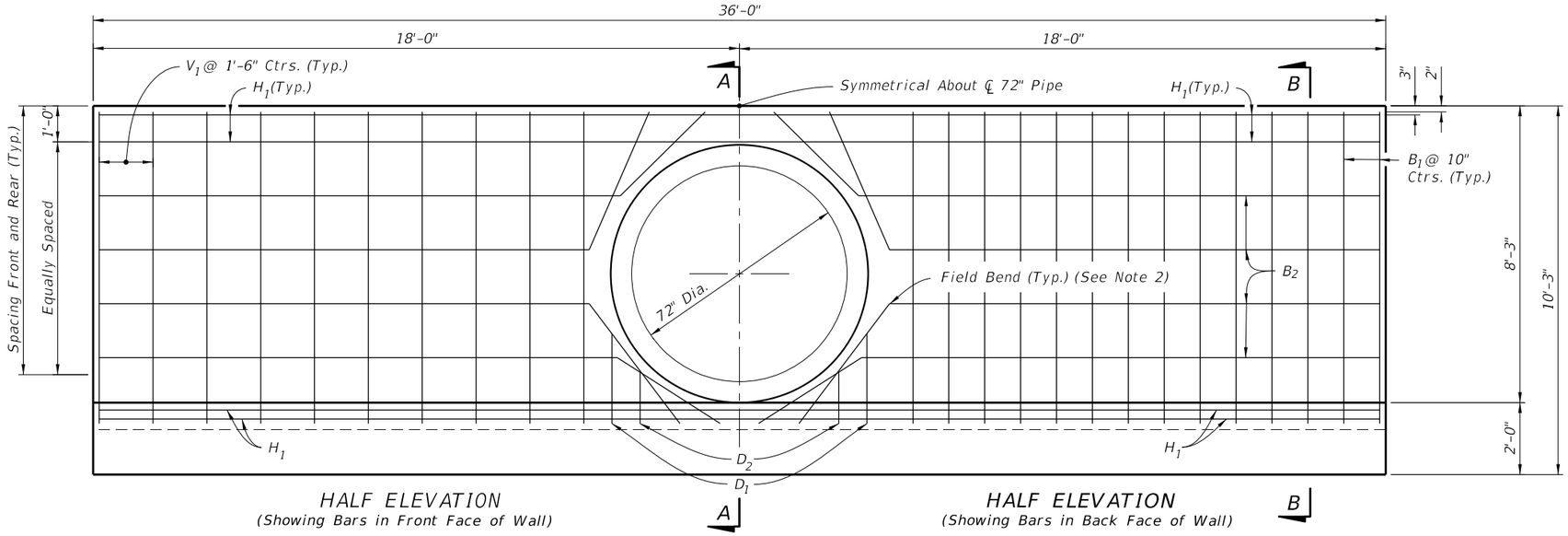

HALF ELEVATION
(Showing Bars in Front Face of Wall)

A

HALF ELEVATION
(Showing Bars in Back Face of Wall)

B

NOTES:

1. 2" clearance on all reinforcement, unless otherwise shown.
2. Cut and bend B_2 Bars as shown.
3. All bar dimensions are out to out.

LEGEND:

H = Horizontal Bars B = Bent Bars

V = Vertical Bars D = Dowels or Diagonal Bars

SINGLE 72" PIPE ENDWALL ESTIMATED QUANTITIES

ITEM	UNIT	RCP	CMP
Class II Concrete	Cu. Yd.	14.4	14.5
Reinforcing Steel	Lb.	1249	1249

BILL OF REINFORCING STEEL

MARK	SIZE	NO. REQD.	LENGTH
H_1	4	9	35'-8"
H_2	5	68	4'-11"
V_1	4	20	8'-7"
B_1	5	34	10'-5"
B_2	4	8	35'-8"
D_1	4	4	2'-6"
D_2	4	4	1'-6"

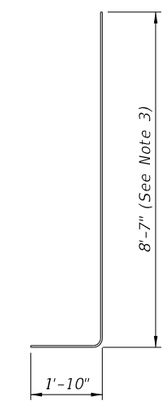

BAR B_1
BENDING DIAGRAM

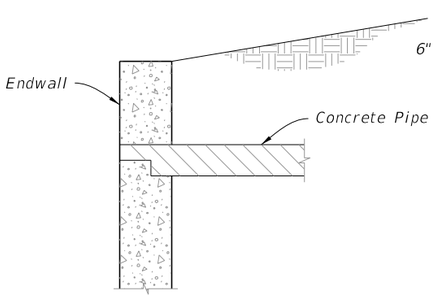

DETAIL "A"
(Concrete Pipe Optional Entrance)

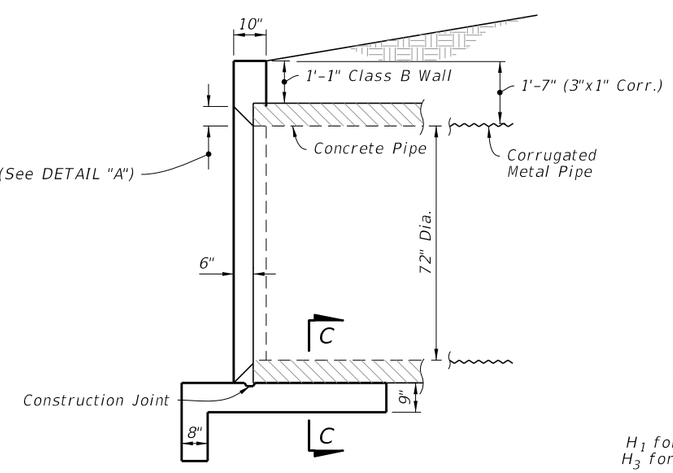

SECTION A-A
(Rebar Not Shown)

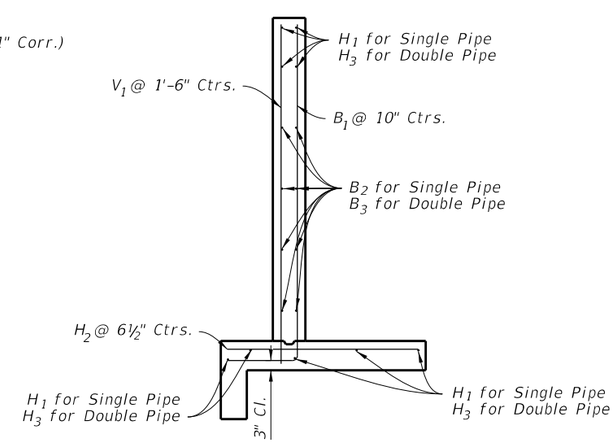

SECTION B-B
(Typical Section)

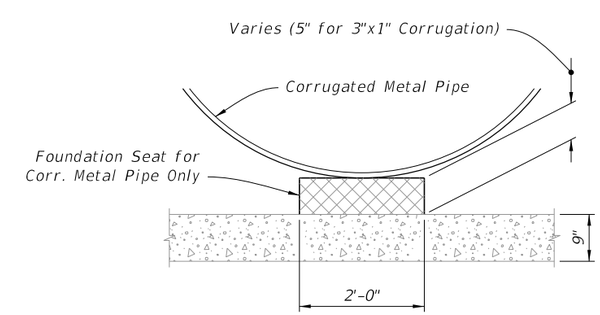

SECTION C-C

SINGLE 72" PIPE ENDWALL DETAILS

9/21/2021 1:47:52 PM

LAST REVISION	REVISION	DESCRIPTION:			INDEX	SHEET
11/01/19			FY 2022-23 STANDARD PLANS	STRAIGHT CONCRETE ENDWALLS SINGLE AND DOUBLE 72" PIPE	430-033	2 of 3

NOTES:

1. 2" clearance on all reinforcement, unless otherwise shown.
2. Cut and bend B_3 Bars as shown.
3. All bar dimensions are out to out.

LEGEND:

H = Horizontal Bars

V = Vertical Bars

B = Bent Bars

D = Dowels or Diagonal Bars

DOUBLE 72" PIPE ENDWALL ESTIMATED QUANTITIES

ITEM	UNIT	RCP	CMP
Class II Concrete	Cu. Yd.	17.5	17.8
Reinforcing Steel	Lb.	1519	1519

BILL OF REINFORCING STEEL

MARK	SIZE	NO. REQD.	LENGTH
H_2	5	85	4'-11"
H_3	4	9	45'-8"
V_1	4	23	8'-7"
B_1	5	38	10'-5"
B_3	4	8	45'-8"
D_1	4	8	2'-6"
D_2	4	8	1'-6"

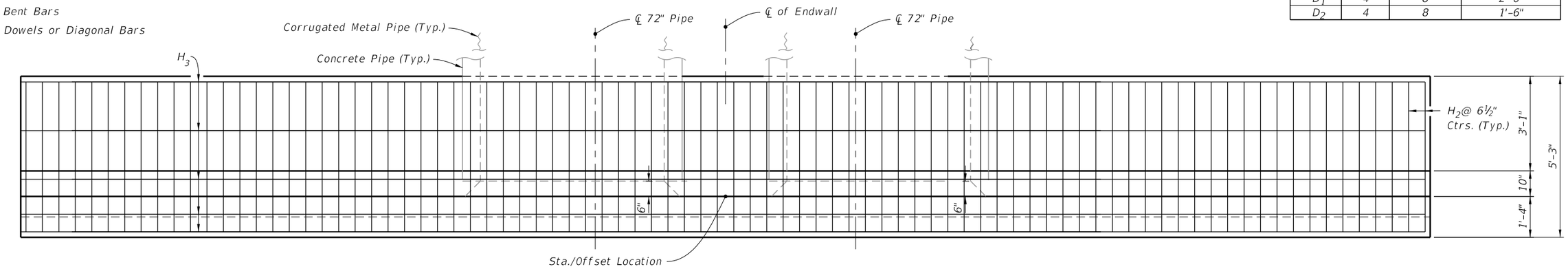

PLAN
(Showing Bars In Footing)

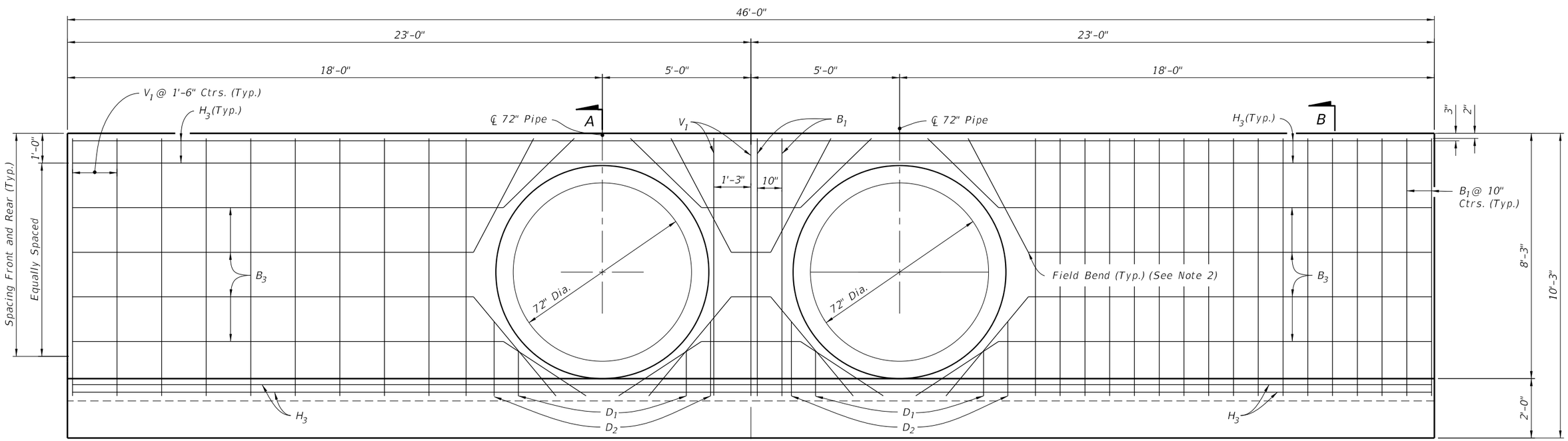

HALF ELEVATION
(Showing Bars in Front Face of Wall)

A See Sheet 2

Symmetrical About ℄

HALF ELEVATION
(Showing Bars in Back Face of Wall)

B See Sheet 2

DOUBLE 72" PIPE ENDWALL DETAILS

LAST REVISION	REVISION	DESCRIPTION:			INDEX	SHEET
11/01/19			FY 2022-23 STANDARD PLANS	STRAIGHT CONCRETE ENDWALLS SINGLE AND DOUBLE 72" PIPE	430-033	3 of 3

9/21/2021 1:47:53 PM

GENERAL NOTES:

1. Use Class II concrete.

2. Reinforcing steel is either Grade 40 or 60.

3. Endwalls may be cast in place or precast concrete. The Contractor or the Supplier will determine the additional reinforcement necessary for handling precast units.

4. Chamfer all exposed edges and corners ¾" unless otherwise shown.

5. Quantities shown are for estimating purposes only.

TABLE OF CONTENTS:

Sheet	Description
1	General Notes and Contents
2	Single 84" Pipe Endwall Details

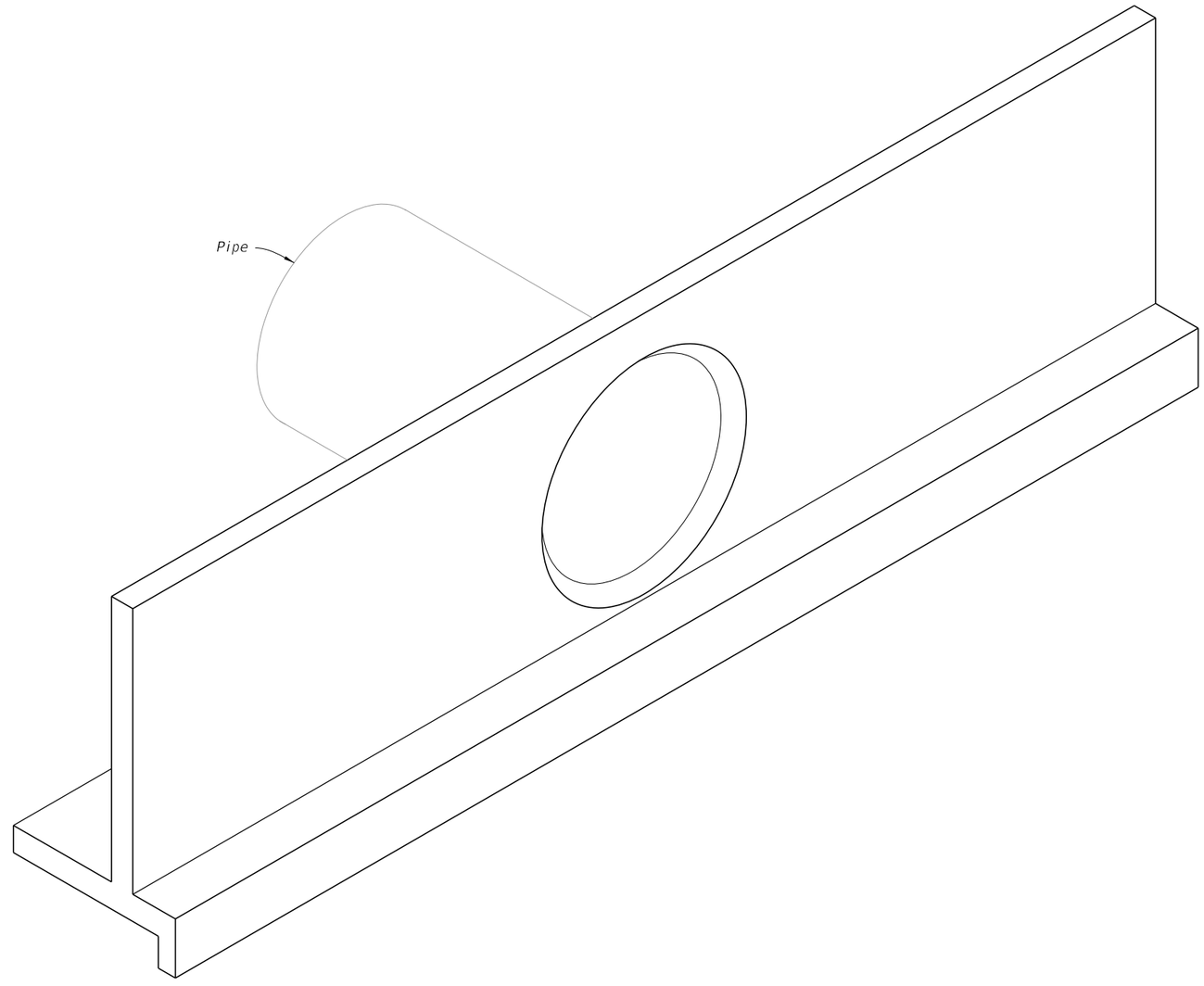

STRAIGHT CONCRETE ENDWALL SINGLE 84" PIPE

9/21/2021 1:47:54 PM

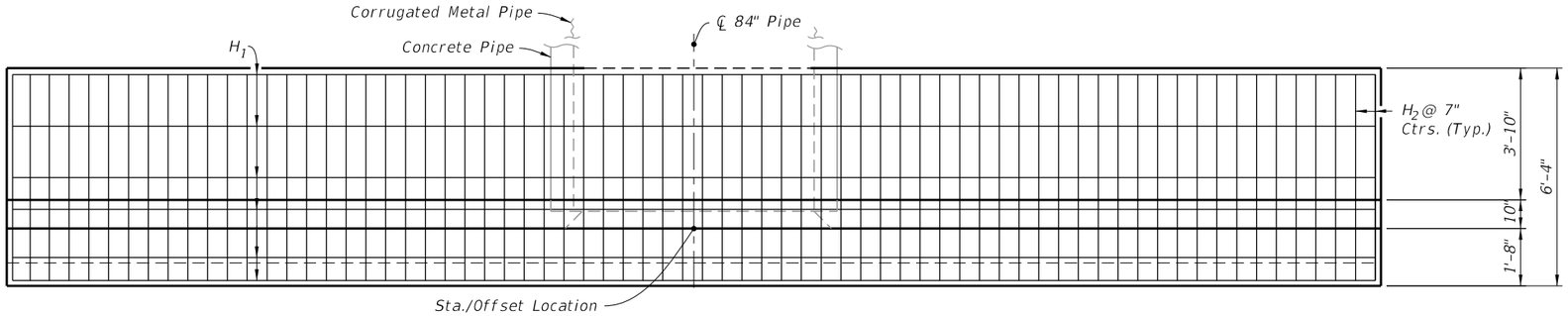

PLAN
(Showing Bars In Footing)

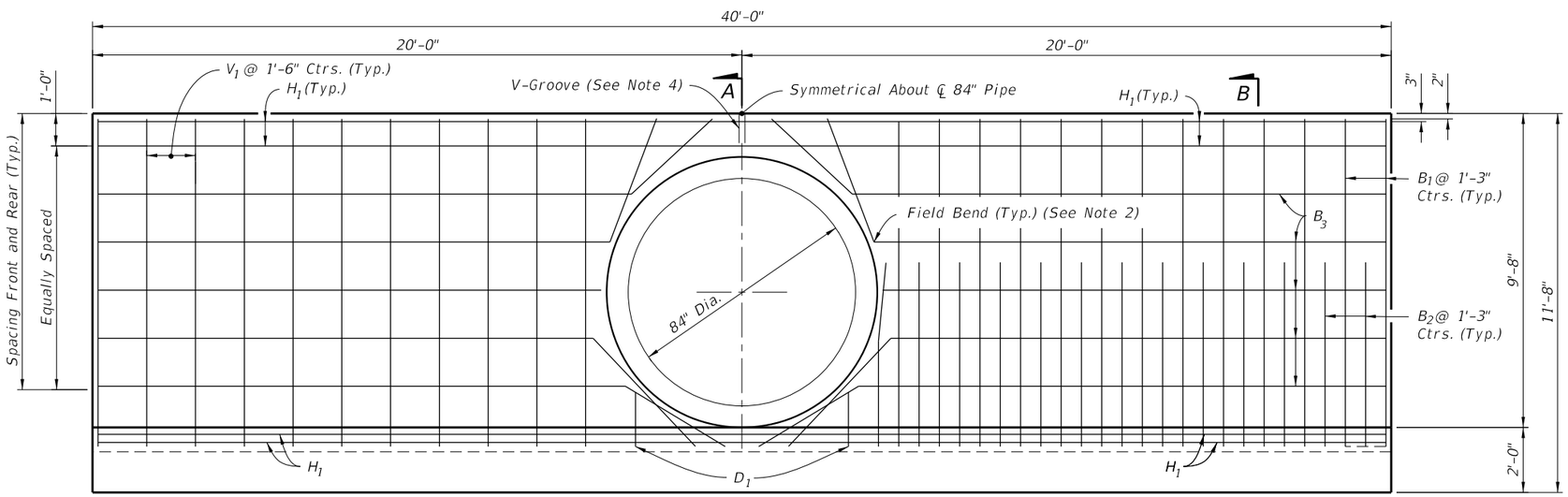

HALF ELEVATION
(Showing Bars in Front Face of Wall)

A

HALF ELEVATION
(Showing Bars in Back Face of Wall)

B

NOTES:

1. 2" clearance on all reinforcement, unless otherwise shown.
2. Cut and/or bend B_3 Bars as shown.
3. All bar dimensions are out to out.
4. Install a ¾" V-Groove at the top, front and back.

SINGLE 84" PIPE ENDWALL ESTIMATED QUANTITIES

ITEM	UNIT	RCP	CMP
Class II Concrete	Cu. Yd.	20.0	20.2
Reinforcing Steel	Lb.	2,095	2,095

BILL OF REINFORCING STEEL

MARK	SIZE	NO. REQD.	LENGTH
H_1	4	6	39'-8"
H_2	6	69	6'-0"
V_1	4	22	10'-2"
B_1	6	26	12'-4"
B_2	6	26	7'-10"
B_3	4	14	39'-8"
D_1	4	4	2'-0"

LEGEND:

H = Horizontal Bars
V = Vertical Bars
B = Bent Bars
D = Dowels or Diagonal Bars

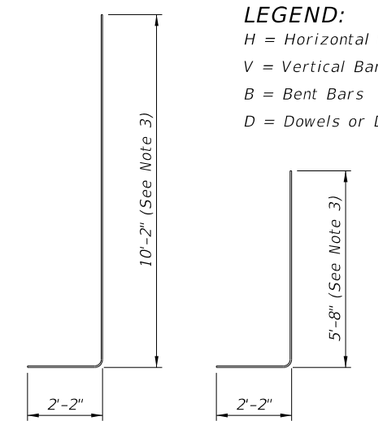

BAR B_1 BAR B_2
BENDING DIAGRAM

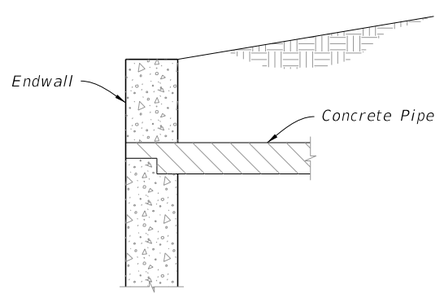

DETAIL "A"
(Concrete Pipe Optional Entrance)

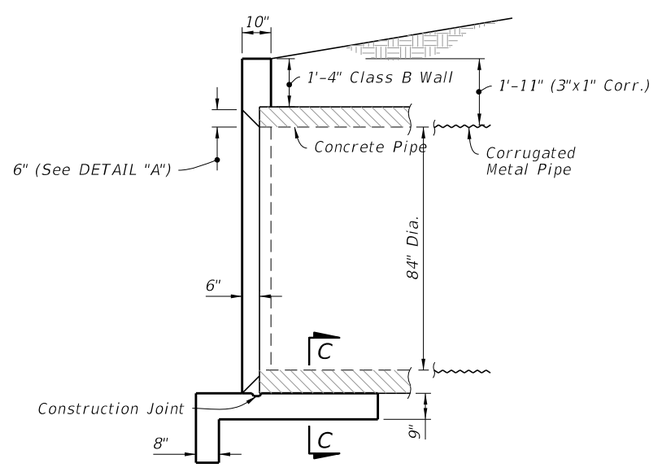

SECTION A-A
(Rebar Not Shown)

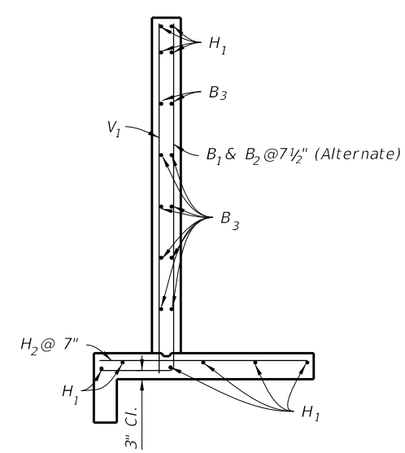

SECTION B-B
(Typical Section)

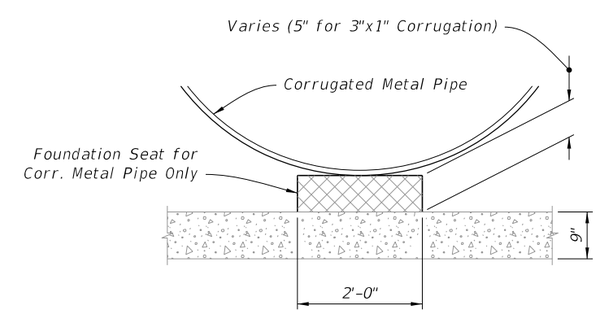

SECTION C-C

SINGLE 84" PIPE ENDWALL DETAILS

9/21/2021 1:47:54 PM

LAST REVISION	REVISION	DESCRIPTION:			INDEX	SHEET
11/01/19			FDOT FY 2022-23 STANDARD PLANS	STRAIGHT CONCRETE ENDWALLS SINGLE 84" PIPE	430-034	2 of 2

GENERAL NOTES:

1. Use Class II concrete.
2. Chamfer all exposed edges and corners ¾" unless otherwise shown.
3. Quantities shown are for estimating purposes only.

TABLE OF CONTENTS:

Sheet	Description
1	General Notes and Contents
2	U-Type and 45° Endwalls

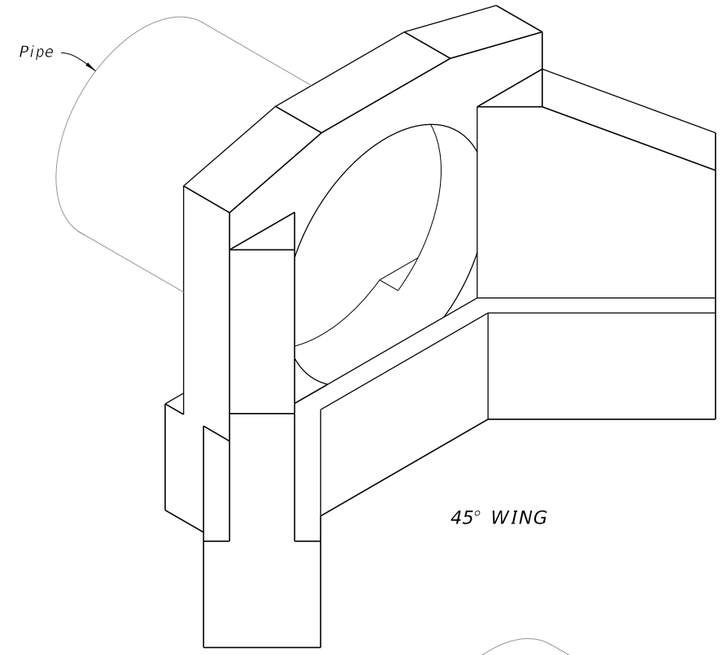

45° WING

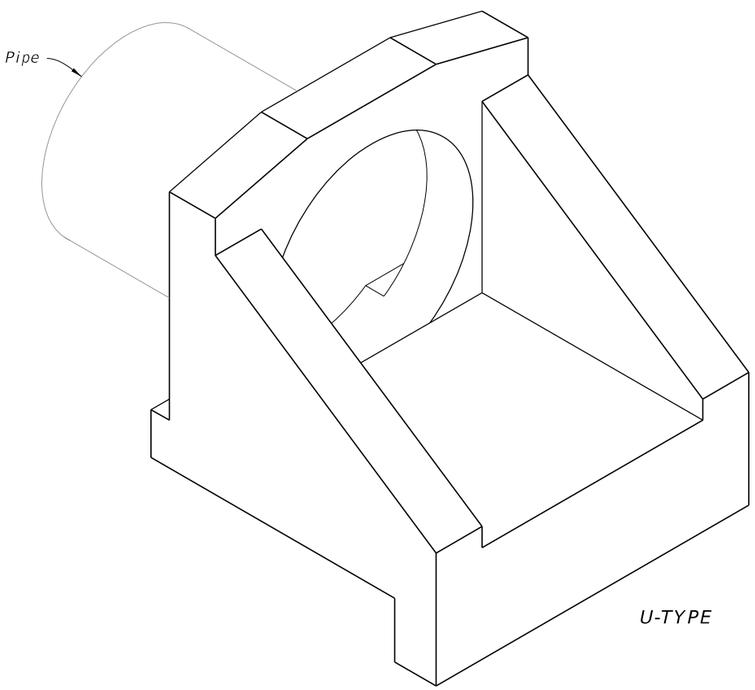

U-TYPE

WINGED CONCRETE ENDWALLS

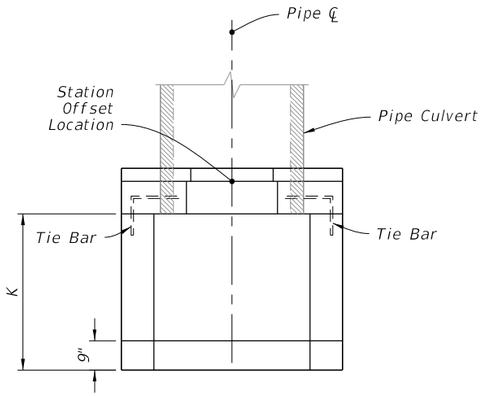

PLAN

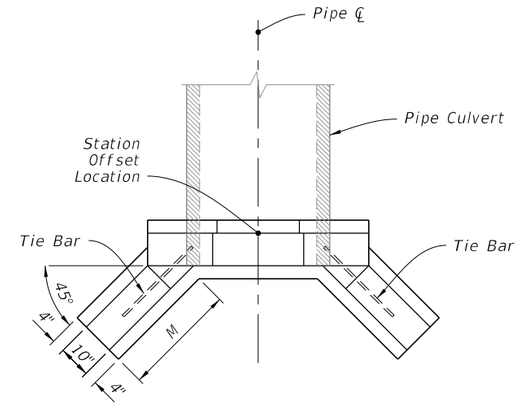

PLAN

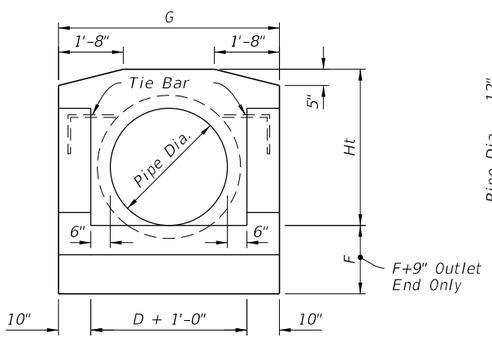

FRONT ELEVATION

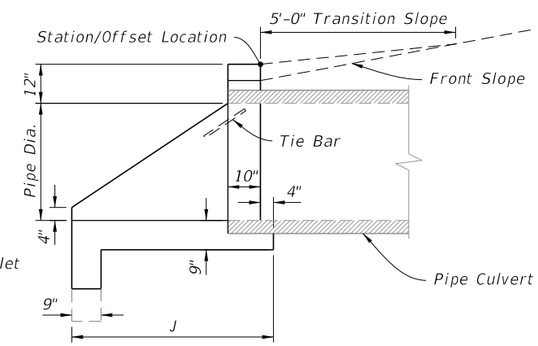

SIDE ELEVATION

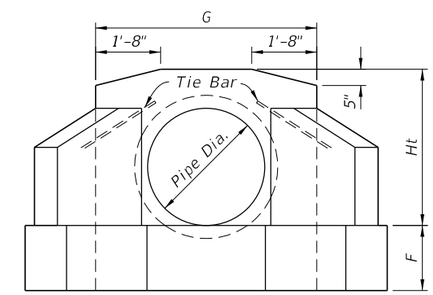

FRONT ELEVATION

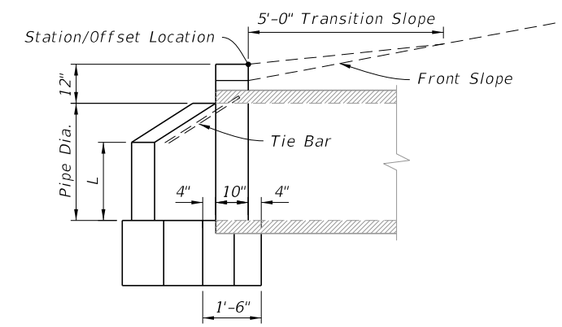

SIDE ELEVATION

DIMENSIONS AND ESTIMATED QUANTITIES PIPE CULVERT ENDWALLS WITH U-TYPE WINGS													
DIMENSIONS							QUANTITIES IN ONE ENDWALL						
Pipe		Wall			Footing		Concrete, Class II, Total (CY)						Steel Tie Bars
							RCP		CMP		CIP		
Dia. D	Area (ft^2)	G	Ht	K	F	J	Inlet	Outlet	Inlet	Outlet	Inlet	Outlet	
15"	1.2	3'-11"	2'-3"	1'-5"	1'-3"	2'-7"	0.59	0.67	0.62	0.70	0.61	0.70	none
18"	1.8	4'-2"	2'-6"	1'-9"	1'-3"	2'-11"	0.70	0.79	0.74	0.82	0.74	0.82	none
24"	3.1	4'-8"	3'-0"	2'-6"	1'-6"	3'-8"	1.01	1.11	1.06	1.16	1.06	1.16	2-#6 Bars x 2'-0"
30"	4.9	5'-2"	3'-6"	3'-3"	1'-6"	4'-5"	1.33	1.44	1.41	1.51	1.40	1.51	2-#6 Bars x 2'-0"
36"	7.1	5'-8"	4'-0"	4'-0"	1'-9"	5'-2"	1.73	1.85	1.84	1.96	1.82	1.94	2-#6 Bars x 2'-6"
42"	9.6	6'-2"	4'-6"	4'-9"	2'-0"	5'-11"	2.19	2.32	2.32	2.45			2-#6 Bars x 2'-6"
48"	12.6	6'-8"	5'-0"	5'-6"	2'-0"	6'-8"	2.64	2.78	2.81	2.95			2-#6 Bars x 3'-0"

ENDWALL WITH U-TYPE WINGS

DIMENSIONS AND ESTIMATED QUANTITIES PIPE CULVERT ENDWALLS WITH 45° WINGS										
DIMENSIONS							QUANTITIES IN ONE ENDWALL			
Pipe		Wall				Footing	Concrete, Class II			Steel Tie Bars
							Total (CY)			
Dia. D	Area (ft^2)	Ht	G	L	M	F	RCP	CMP	CIP	
15"	1.2	2'-3"	3'-7"	1'-0"	1'-3"	1'-3"	0.56	0.59	0.59	none
18"	1.8	2'-6"	3'-10"	1'-2"	1'-7"	1'-3"	0.74	0.77	0.77	none
24"	3.1	3'-0"	4'-4"	1'-5"	2'-1"	1'-4"	1.01	1.06	1.06	2 -#6 Bars x 2'-0"
30"	4.9	3'-6"	4'-10"	1'-9"	2'-5"	1'-6"	1.32	1.40	1.39	2 -#6 Bars x 2'-0"
36"	7.1	4'-0"	5'-4"	2'-0"	2'-11"	1'-8"	1.72	1.83	1.82	2 -#6 Bars x 2'-6"
42"	9.6	4'-6"	5'-10"	2'-3"	3'-6"	2'-0"	2.34	2.47		2 -#6 Bars x 2'-6"
48"	12.6	5'-0"	6'-4"	2'-6"	4'-0"	2'-0"	2.74	2.90		2 -#6 Bars x 2'-6"

ENDWALL WITH 45° WINGS

U-TYPE AND 45° ENDWALLS

9/21/2021 1:47:56 PM

LAST REVISION	REVISION	DESCRIPTION:			INDEX	SHEET
11/01/21			FY 2022-23 STANDARD PLANS	WINGED CONCRETE ENDWALLS	430-040	2 of 2

GENERAL NOTES:

1. Use Class II Concrete.

2. Channel section C3 x 6.0 may be substituted for the C4 x 5.4 channel.

3. All steel reinforcing bars are #4 with 2" cover except as noted. Spacing shown are center to center. Lap bars 1'-5" minimum. Welded wire fabric (two cages max.) with an equivalent cross section area (0.20 sq. in.) may be substituted for bar reinforcement.

4. Drill 1¼" holes 8" deep with a rotary drill in existing endwall for dowel bars. Thoroughly clean holes prior to installing Adhesive-Bonded Dowels.

5. Quantities shown are for estimating purposes only.

6. For supplemental details, see Index 425-001.

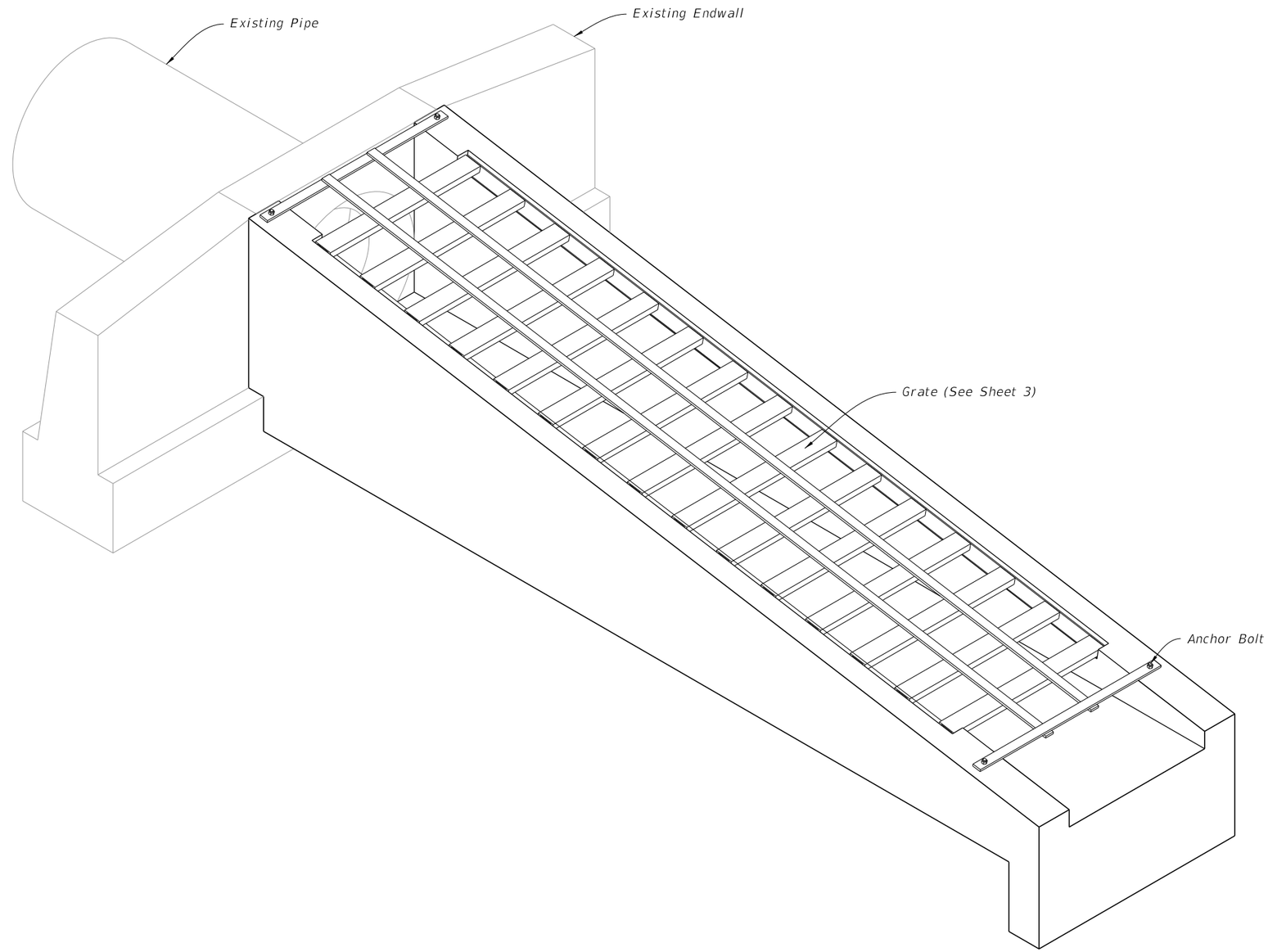

TABLE OF CONTENTS:

Sheet	Description
1	General Notes and Contents
2	Endwalls for 1:4 and 1:6 Slopes
3	Steel Grate

SAFETY MODIFICATIONS

9/21/2021 1:47:56 PM

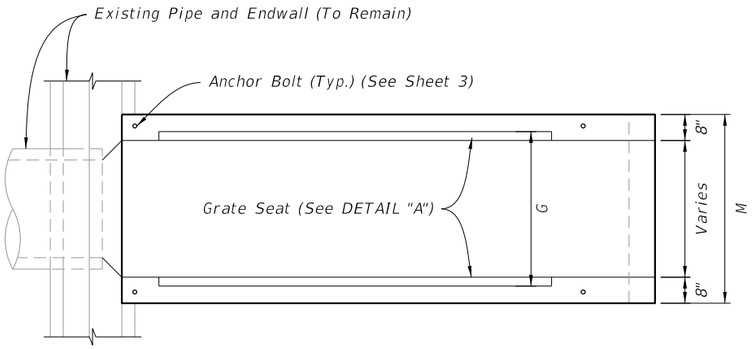

PLAN

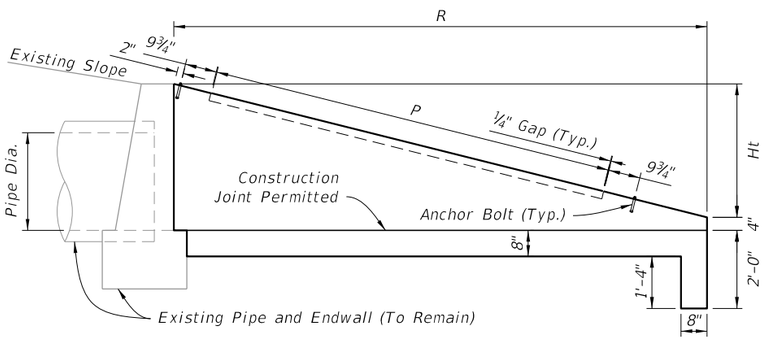

ELEVATION

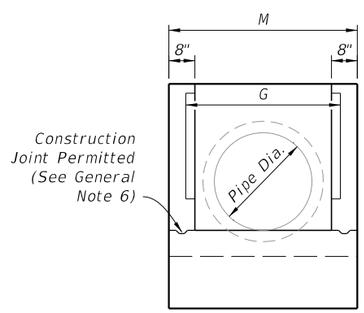

END VIEW

DIMENSIONAL DETAILS

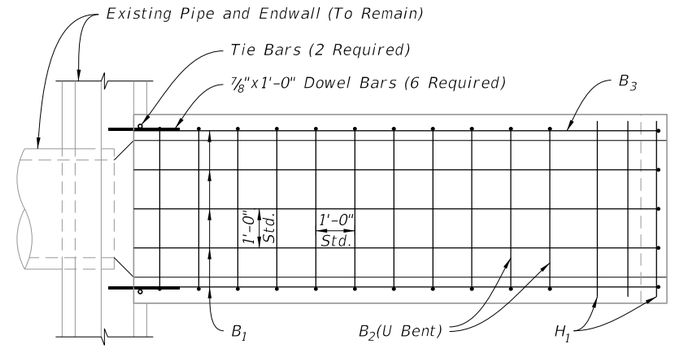

PLAN

LEGEND:

H = Horizontal Bars

B = Bent Bars

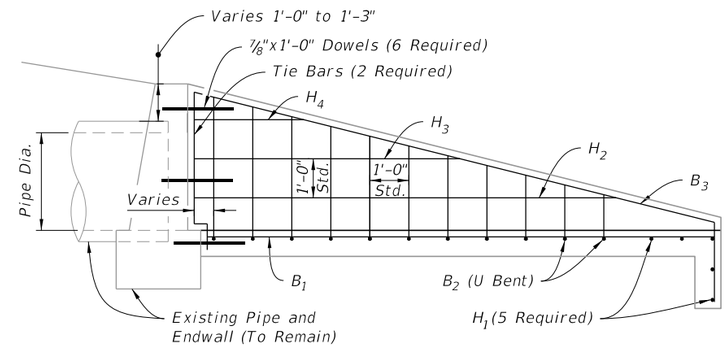

ELEVATION

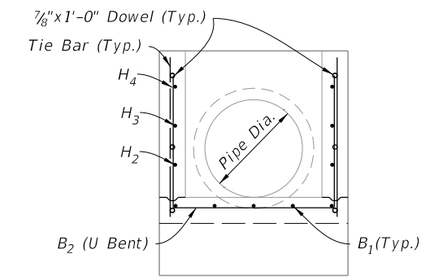

BACK VIEW

REINFORCING DETAILS

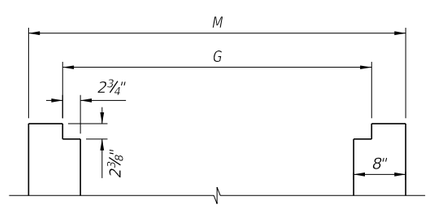

GRATE SEAT

DETAIL "A"

TABLE 1
U-ENDWALL DIMENSIONS AND QUANTITIES

Slope	Pipe Dia.	G	M	Ht	R	P	Class II Concrete-CY	Reinforcing Steel-lbs.	Sod SY
1:6	15"	2'-8½"	3'-7"	2'-2"	13'-0"	9'-4"	2.12	167	23
	18"	2'-11½"	3'-10"	2'-5"	14'-6"	11'-4"	2.53	173	25
	24"	3'-5½"	4'-4"	2'-11"	17'-6"	14'-4"	3.48	238	29
	30"	3'-11½"	4'-10"	3'-5"	20'-6"	17'-4"	4.57	315	32
1:4	15"	2'-8½"	3'-7"	2'-2"	8'-8"	5'-4"	1.44	120	19
	18"	2'-11½"	3'-10"	2'-5"	9'-8"	6'-4"	1.72	130	20
	24"	3'-5½"	4'-4"	2'-11"	11'-8"	8'-4"	2.36	167	22
	30"	3'-11½"	4'-10"	3'-5"	13'-8"	10'-4"	3.09	225	25

ENDWALLS FOR 1:4 AND 1:6 SLOPES

TABLE 2 GRATE DIMENSIONS AND QUANTITIES									
Slope	Pipe Dia.	Channels @ 5.4 Lbs./LF			Bars @ 3.4 lbs/LF (2 ea.)			Angles @ 3.2 Lbs./LF	
		Quantity	F	lbs.	L	M-4"	lbs.	P	lbs.
1:6	15"	10	2'-6⅞"	139	11'-3"	3'-3"	99	9'-4"	60
	18"	12	2'-9⅞"	183	13'-3"	3'-6"	114	11'-4"	73
	24"	15	3'-3⅞"	269	16'-3"	4'-0"	138	14'-4"	92
	30"	18	3'-9⅞"	372	19'-3"	4'-6"	162	17'-4"	111
1:4	15"	6	2'-6⅞"	83	7'-3"	3'-3"	71	5'-4"	34
	18"	7	2'-9⅞"	107	8'-3"	3'-6"	80	6'-4"	41
	24"	9	3'-3⅞"	161	10'-3"	4'-0"	97	8'-4"	53
	30"	11	3'-9⅞"	227	12'-3"	4'-6"	114	10'-4"	66

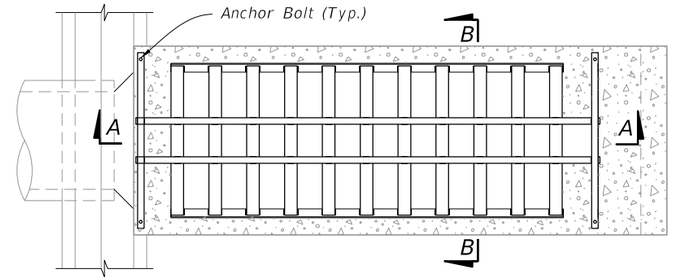

PLAN

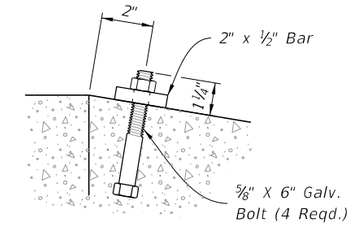

Anchor Bolt Detail
DETAIL "B"

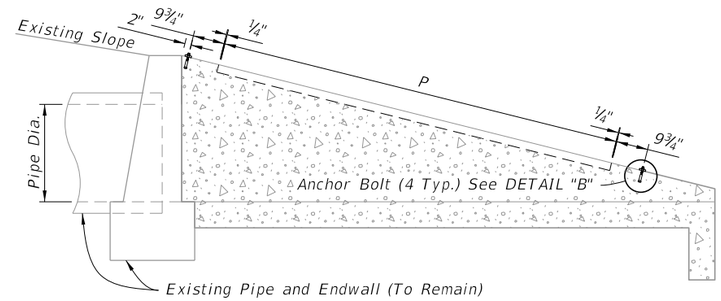

ELEVATION

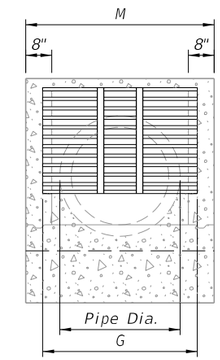

END VIEW

STEEL GRATE MOUNTING

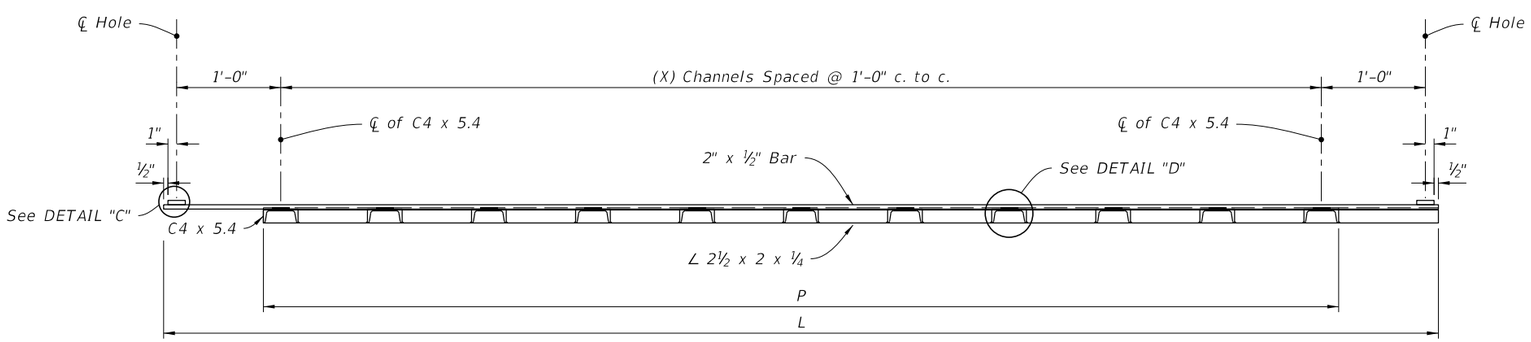

SECTION A-A

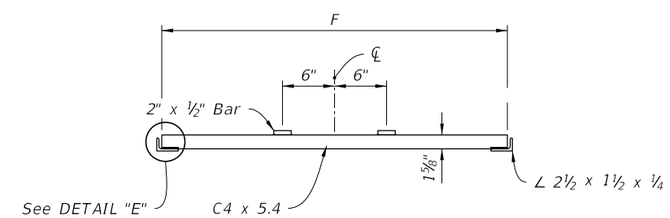

SECTION B-B

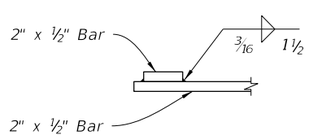

Bar to Bar Weld
DETAIL "C"

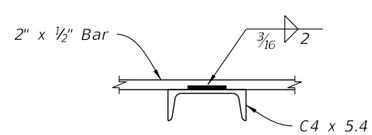

Bar to Channel Weld
DETAIL "D"

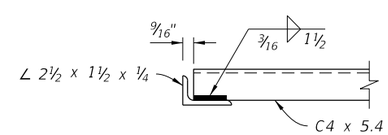

Channel to Angle Weld
DETAIL "E"

STEEL GRATE DETAILS

STEEL GRATE

LAST REVISION	REVISION	DESCRIPTION:				INDEX	SHEET
11/01/19			FDOT	FY 2022-23 STANDARD PLANS	SAFETY MODIFICATIONS FOR ENDWALLS	430-090	3 of 3

9/21/2021 1:47:57 PM

GENERAL NOTES:

1. Install outlet pipes and preformed channel inverts with a slope of 0.6% or steeper toward the outlet regardless of the surface slope, unless shown different in the Plans.

2. Stub trench drain directly into drainage structures or install outlet pipes to connect trench drain to drainage structures.

3. Provide a cleanout port compatible with the manufactured system for Type I drains at the upstream end and at intervals of 50 feet maximum. Provide a cleanout port with an opening of 6" to 10" wide (transverse to the trench drain length) and 18" to 24" long. Form curbs or separators around the cleanout when cleanouts are placed adjacent to raised curb or separator. Install the cleanout with a removable load resistant cover or grate.

4. Excavate trench to allow for a minimum of 6" of concrete to be placed under and alongside the trench drain channel system. Install concrete backfill in accordance with Specification 347. Install concrete backfill extending a minimum of 6" past the end of the drain opening at the end of all Type I or II units.

5. Install transverse bars spaced 4" to 6" on center for Type I Trench Drain.

TABLE OF CONTENTS:

Sheet	Description
1	General Notes and Contents
2	Type I - Nonremovable Grate
3	Type II - Removable Grate

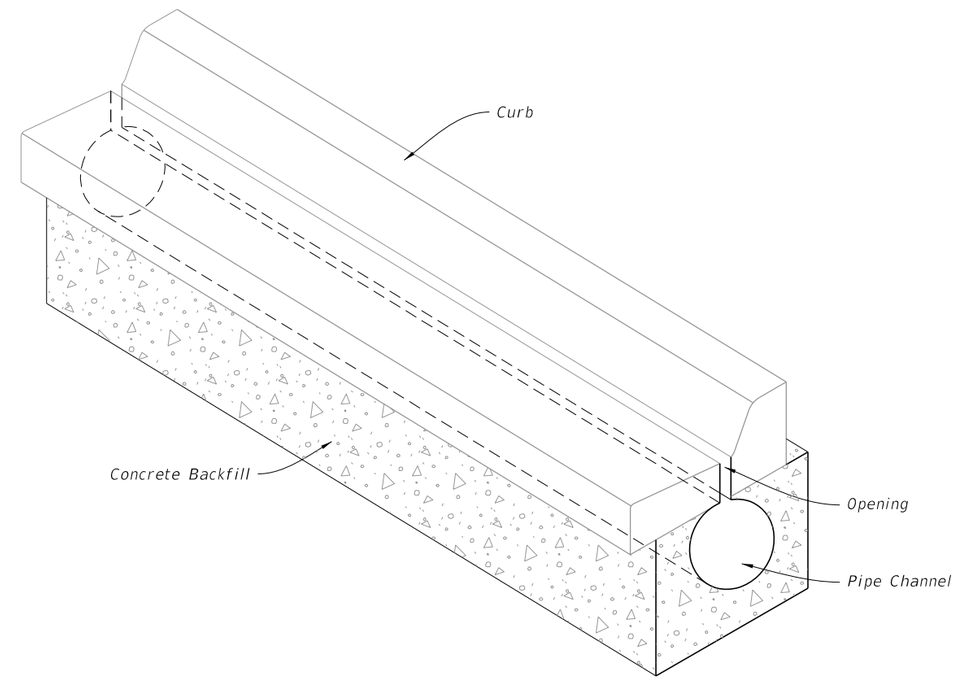

TRENCH DRAIN ASSEMBLY

9/21/2021 1:47:58 PM

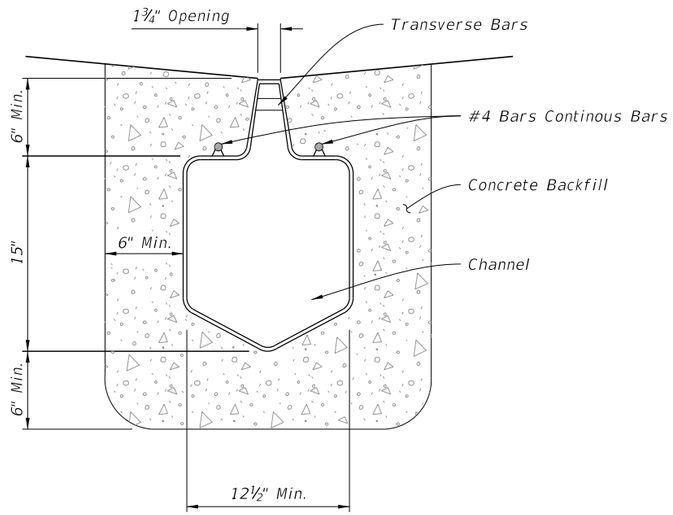

PREFORMED POLYETHYLENE CHANNEL

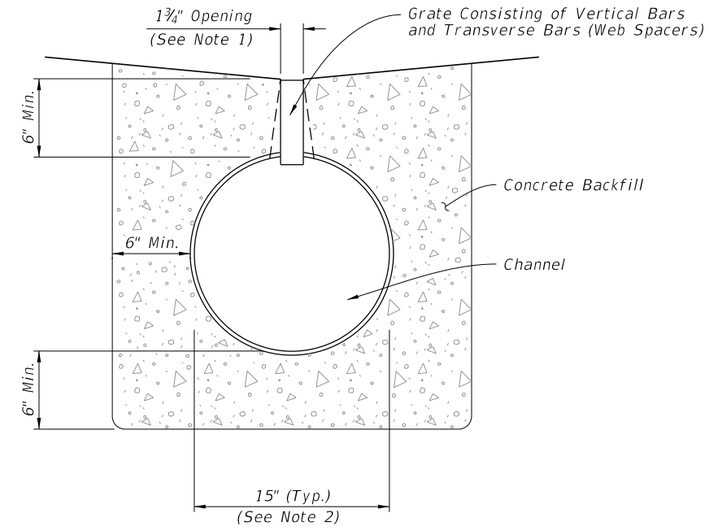

ROUND PIPE CHANNEL

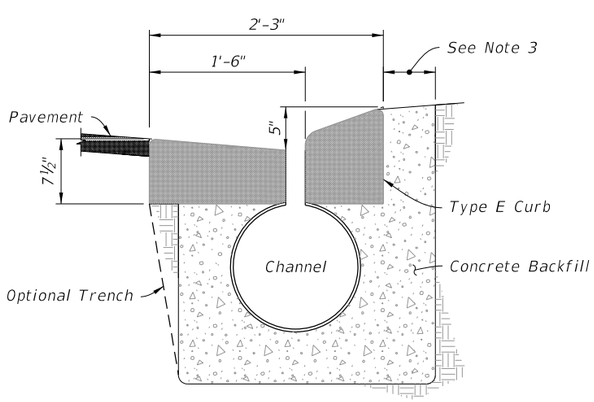

WITHIN TYPE E CURB

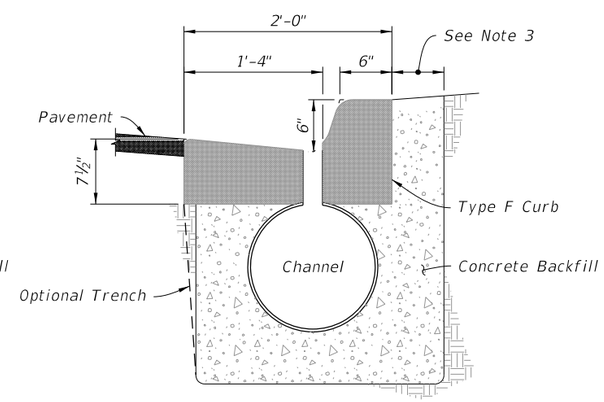

WITHIN TYPE F CURB

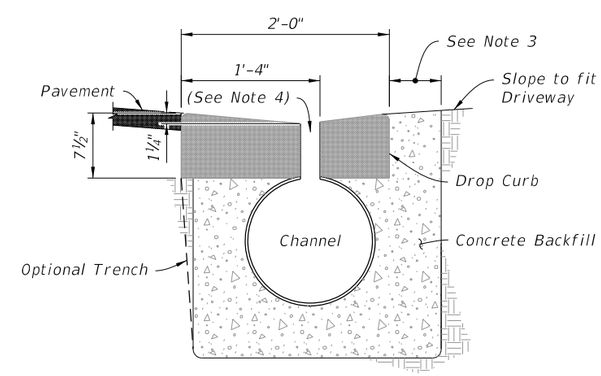

WITHIN DROP CURB

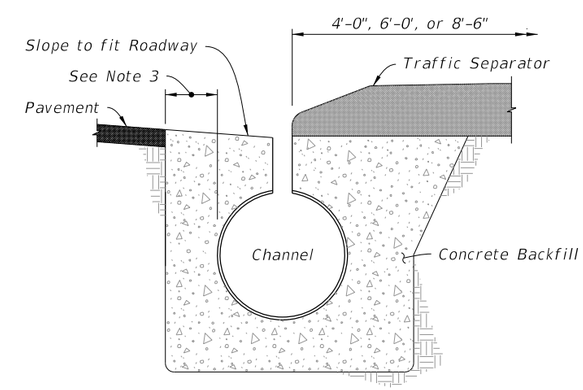

ADJACENT TO TRAFFIC SEPARATOR

TYPICAL LOCATIONS

(Round Channel Shown, Preformed Polyethylene Similar)

NOTES:

1. Opening for fixed height grates. Opening at the pipe can be 3".
2. The Round Pipe Channel is 15" in diameter, unless otherwise shown in the Plans.
3. Provide a minimum 6" concrete on this side of the drain.
4. Install grates on preformed polyethylene channel at driveways.

TYPE I - NONREMOVABLE GRATE

LAST REVISION	REVISION	DESCRIPTION:	FDOT FY 2022-23 STANDARD PLANS	TRENCH DRAIN	INDEX	SHEET
11/01/19					436-001	2 of 3

9/21/2021 1:47:59 PM

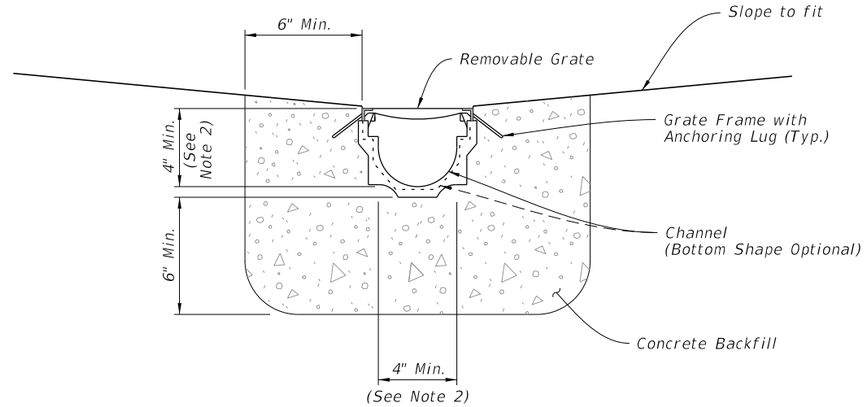

PREFORMED CHANNEL WITH REMOVABLE GRATE

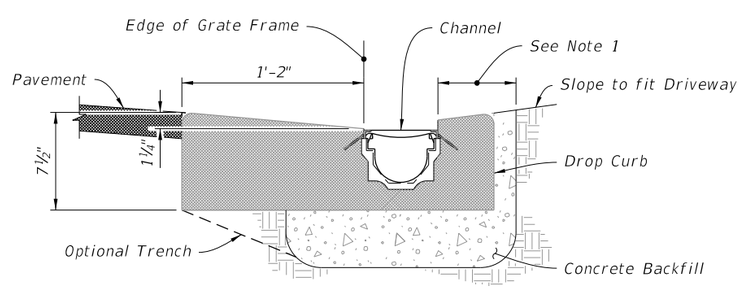

WITHIN DROP CURB

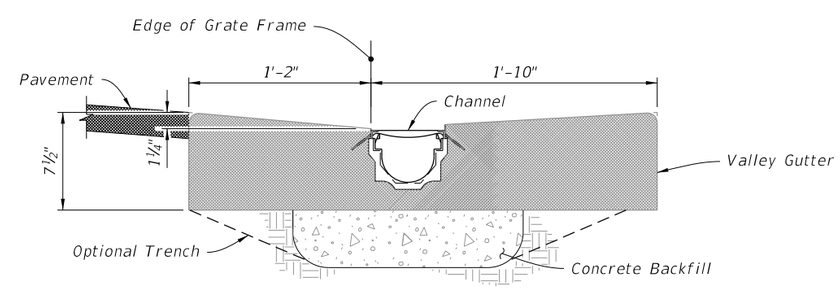

WITHIN VALLEY GUTTER

TYPICAL LOCATIONS

NOTES:

1. Provide minimum 6" of concrete on this side of the drain.
2. 4" Minimum unless otherwise shown in Plans.

TYPE II - REMOVABLE GRATE

LAST REVISION	REVISION	DESCRIPTION:	FDOT FY 2022-23 STANDARD PLANS	TRENCH DRAIN	INDEX	SHEET
11/01/19					436-001	3 of 3

9/21/2021 1:48:00 PM

GENERAL NOTES:

1. Install underdrain pipe that is either 4" smooth or 5" corrugated tubing unless otherwise shown in the Plans. The size to be furnished will be based on the nominal internal diameter of a pipe with a smooth interior wall. Except when prohibited by the Plans, the special provisions or this standard, pipe with a corrugated interior wall may be provided based on the following size equivalency.

   4" smooth interior equivalent to 5" corrugated interior
   5" smooth interior equivalent to 6" corrugated interior
   6" smooth interior equivalent to 8" corrugated interior
   8" smooth interior equivalent to 10" corrugated interior

2. Fine aggregate is quartz sand meeting the requirements of Specifications 902-4.

3. Coarse aggregate is gravel or stone meeting the requirements of Specification 901-2 or 901-3. The gradation is in accordance with Specifications 901, Grades 4, 467, 5, 56 or 57 stone unless otherwise shown restricted in the Plans.

4. Install Underdrain Type I, II, III and V in accordance with Specification 440.

5. Install filter fabric Type D-3 in accordance with Specifications 985. The internal filter fabric of Type V underdrain has a permittivity of 0.7 /sec. and an AOS of #40 sieve.

6. When Type I is used, use a filter fabric sock in accordance with Specification 948.

7. See Index 120-002 for the standard location of Type I, II, and III underdrain. The location of Type V underdrain and nonstandard locations of Type I, II, and III underdrain will be as detailed in the plans.

8. Install filter fabric joints with a overlap a minimum of 1'. Install the internal filter fabric of Type V underdrain with an overlap into the coarse aggregate or the fine aggregate a minimum of 1'.

9. Use nonperforated pipes for underdrain outlet and make all bends using 1/8 (45 deg.) elbows. Construct 90 deg. bends with two 1/8 elbows separated by at least 1' of straight pipe. Outlet pipes stubbed into inlets or other drainage structures must be a minimum 6" above the structure flow line. Install concrete aprons, hardware cloth, and sod for outlet pipes discharging to grassed areas as shown in Index 446-001 for Edgedrain Outlets.

TABLE OF CONTENTS:

Sheet	Description
1	General Notes and Contents
2	Type I, II, and III Underdrains
3	Type Va, Vb, and Cleanout

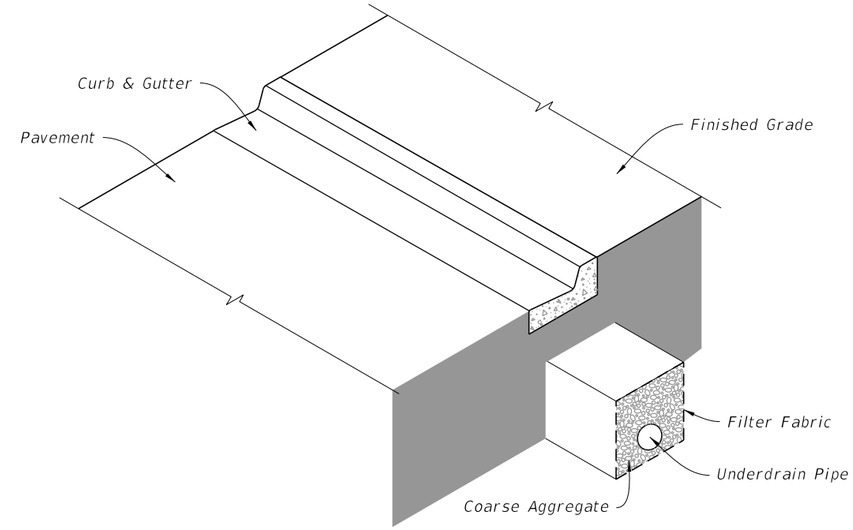

UNDERDRAIN TYPE I, II, AND III ASSEMBLY
(Type II Shown, Others Similar)

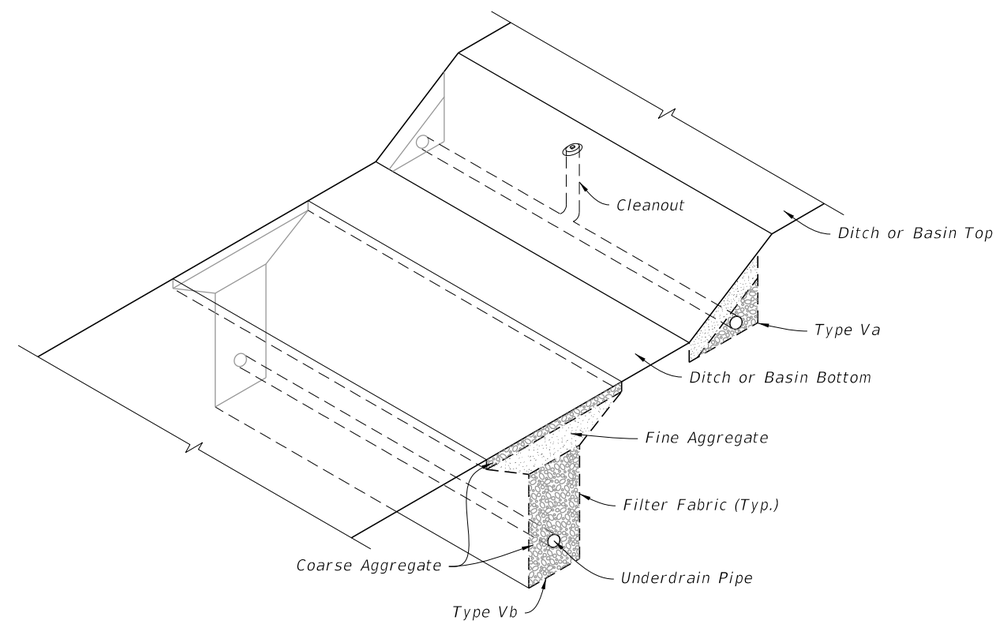

UNDERDRAIN TYPE Va AND Vb ASSEMBLY

10/11/2022 8:36:47 AM

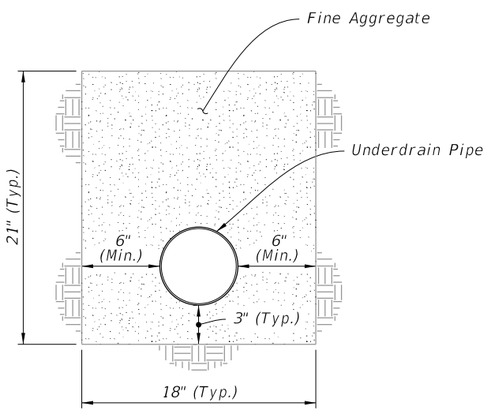

TYPE I

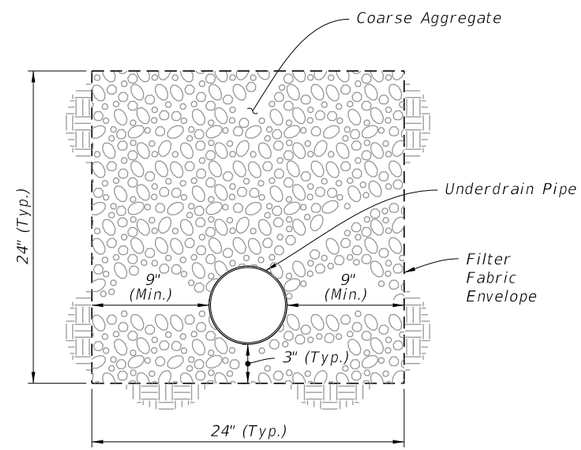

TYPE II

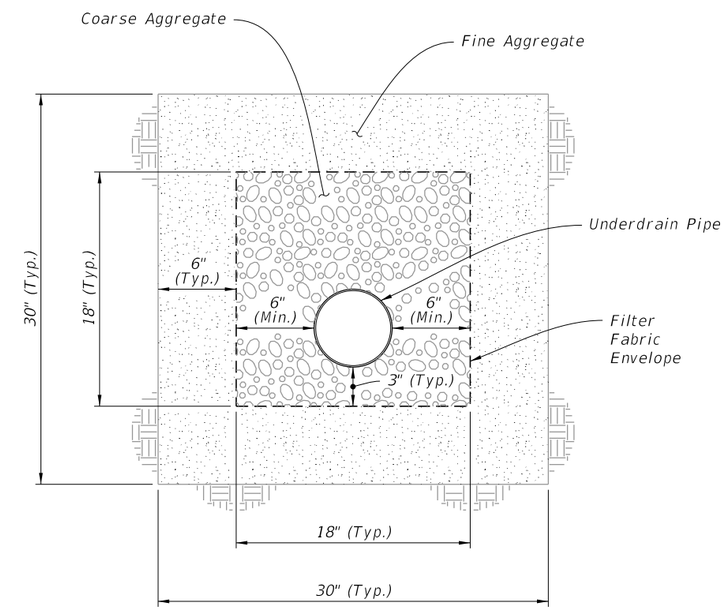

TYPE III

TYPE I, II, AND III

LAST REVISION	REVISION	DESCRIPTION:				INDEX	SHEET
11/01/19			FDOT	FY 2022-23 STANDARD PLANS	TRENCH DRAIN	440-001	2 of 3

10/11/2022 8:36:48 AM

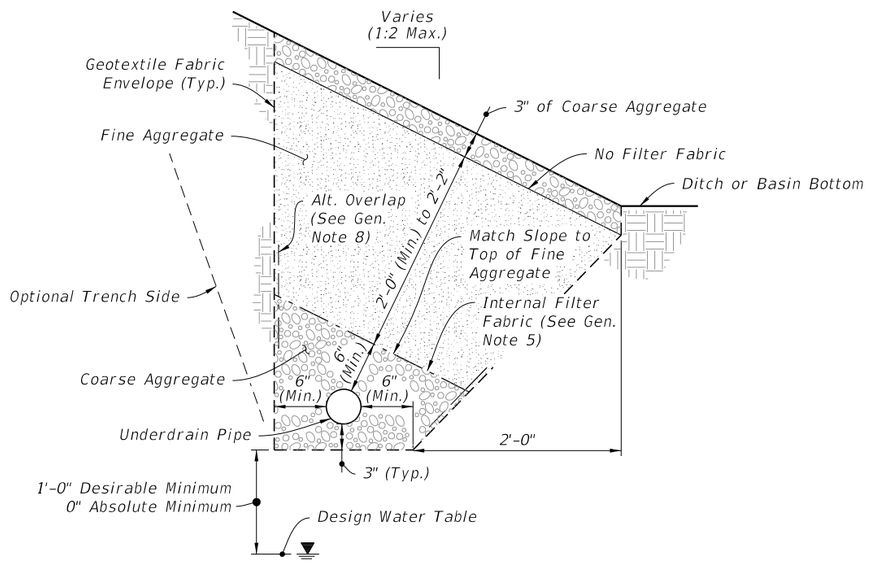

LOWER LIMITS

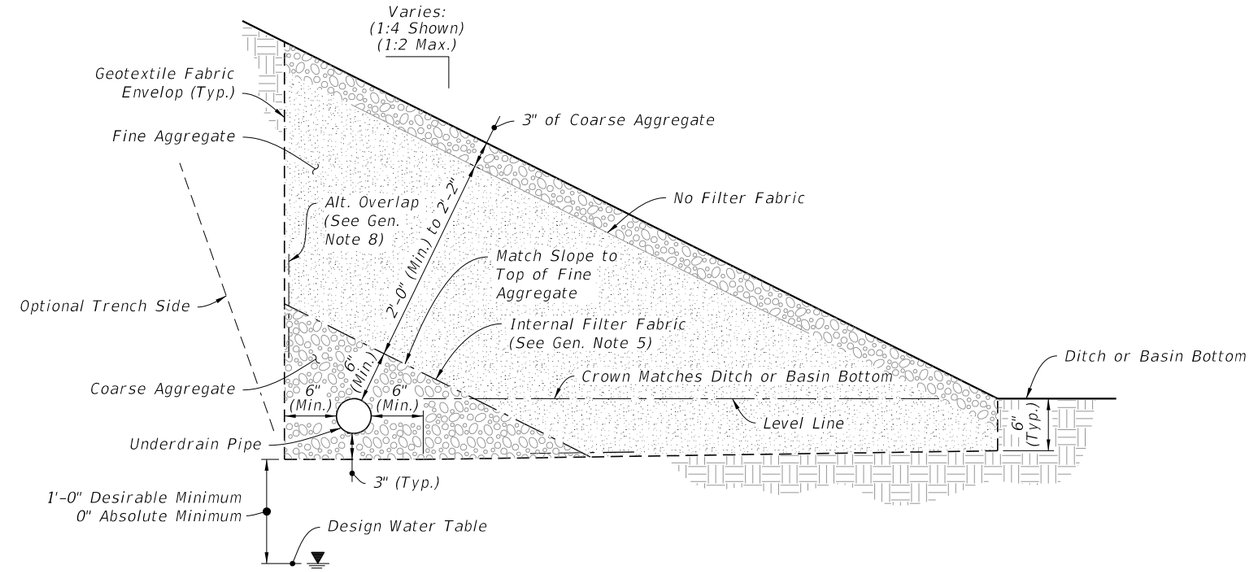

UPPER LIMITS

TYPE Va

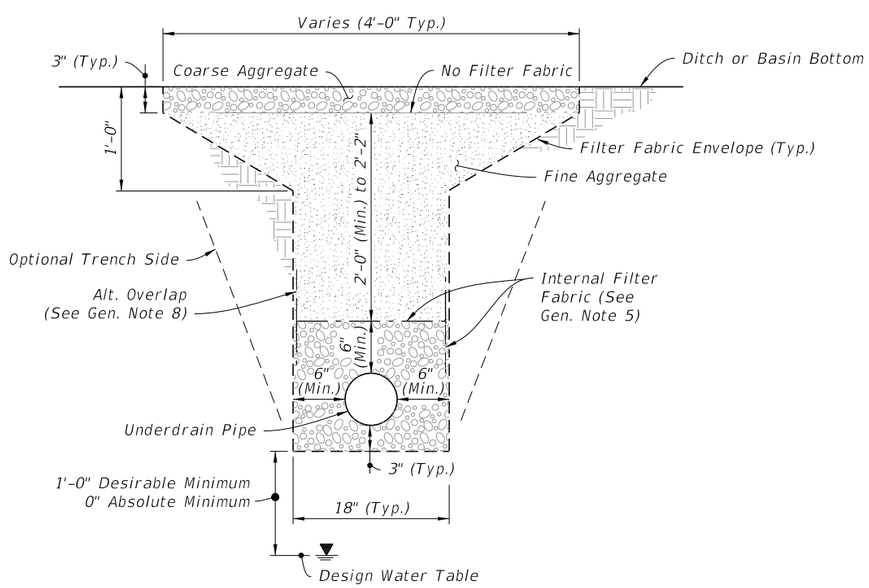

TYPE Vb

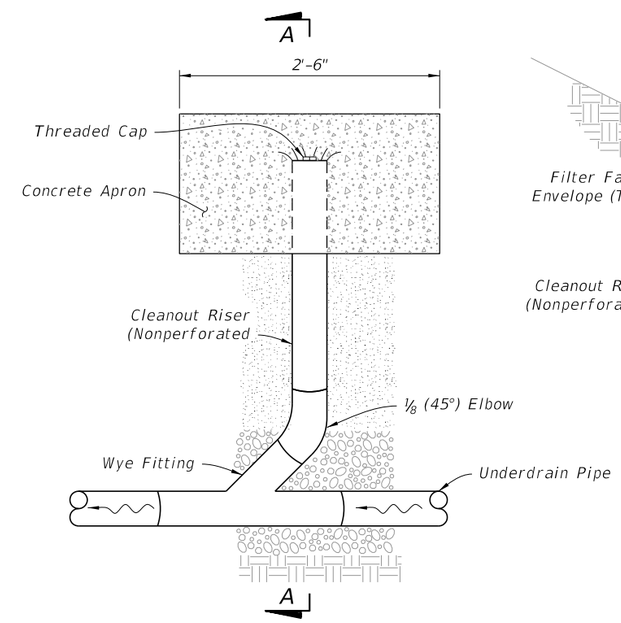

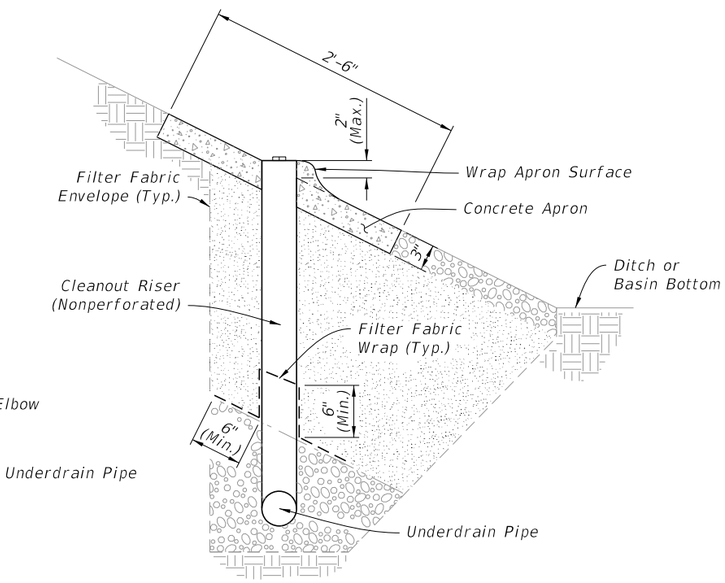

SECTION A-A

TYPE V CLEANOUT

TYPE Va, Vb, AND CLEANOUT

9/21/2021 1:39:47 PM

LAST REVISION	REVISION	DESCRIPTION:			INDEX	SHEET
11/01/19			FDOT FY 2022-23 STANDARD PLANS	UNDERDRAIN	440-001	3 of 3

GENERAL NOTES:

1. Install light duty cast iron cover and frame in accordance with Specification 962.
2. Use Class II concrete. Use No. 3 bars (Grade 60) on 8" centers both ways, sides and bottom.
3. Furnish covers with pick holes. Do not use fitted lifts or handles.
4. Manhole Type P Alternate A, Index 425-010, Type I Frame and Cover, Index 425-001, may be used in lieu of the box detailed in this Index.

TABLE OF CONTENTS:

Sheet	Description
1	General Notes and Contents
2	Typical Inspection Box Installation
3	Typical Urban, Slope, and Top Adjustment Installations

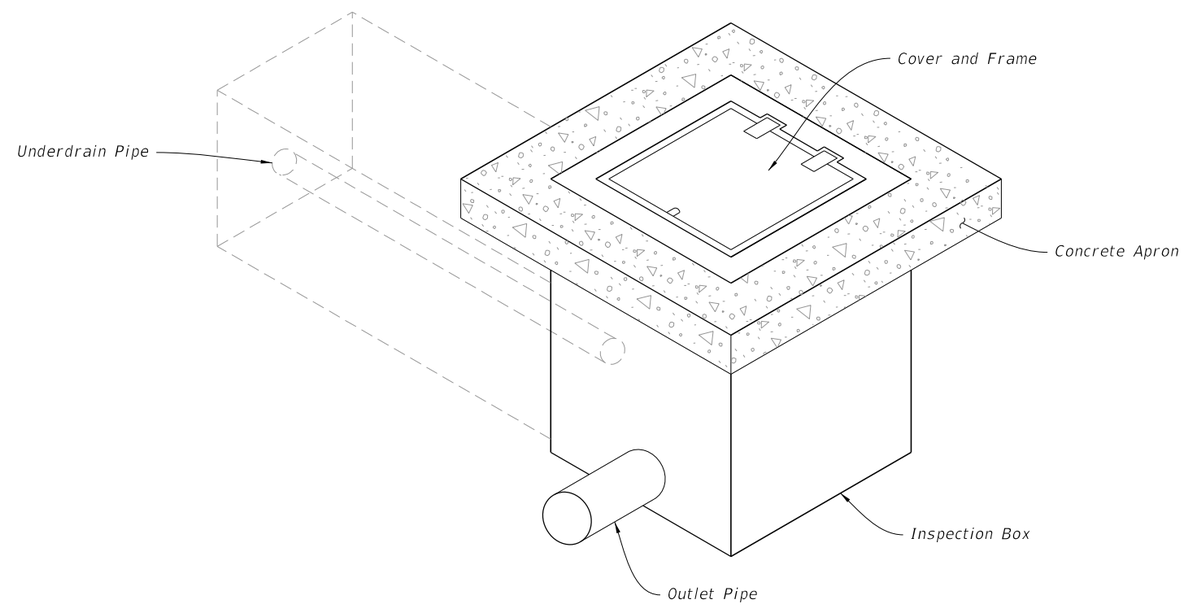

UNDERDRAIN INSPECTION BOX ASSEMBLY

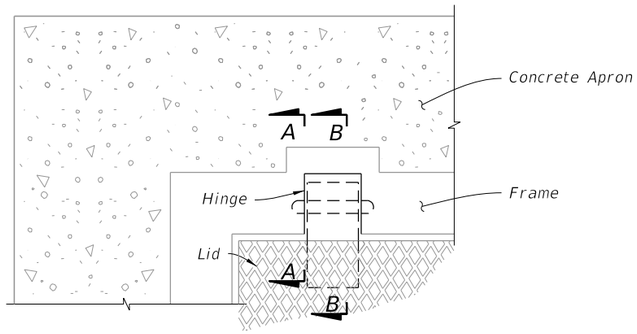

PLAN VIEW

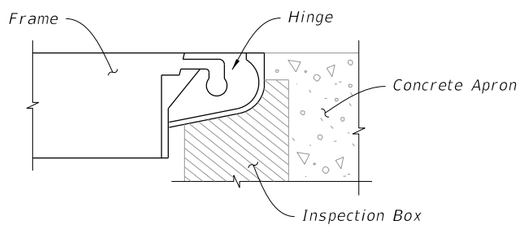

SECTION A-A
(Frame)

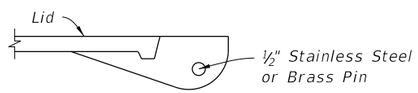

SECTION B-B
(Lid)

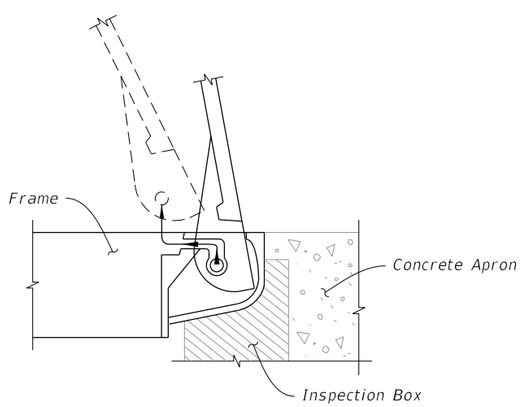

COVER REMOVAL

HINGE DETAIL

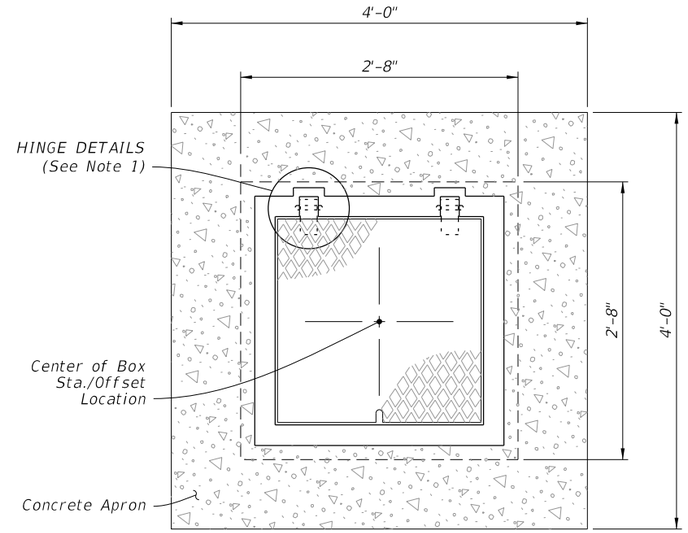

PLAN

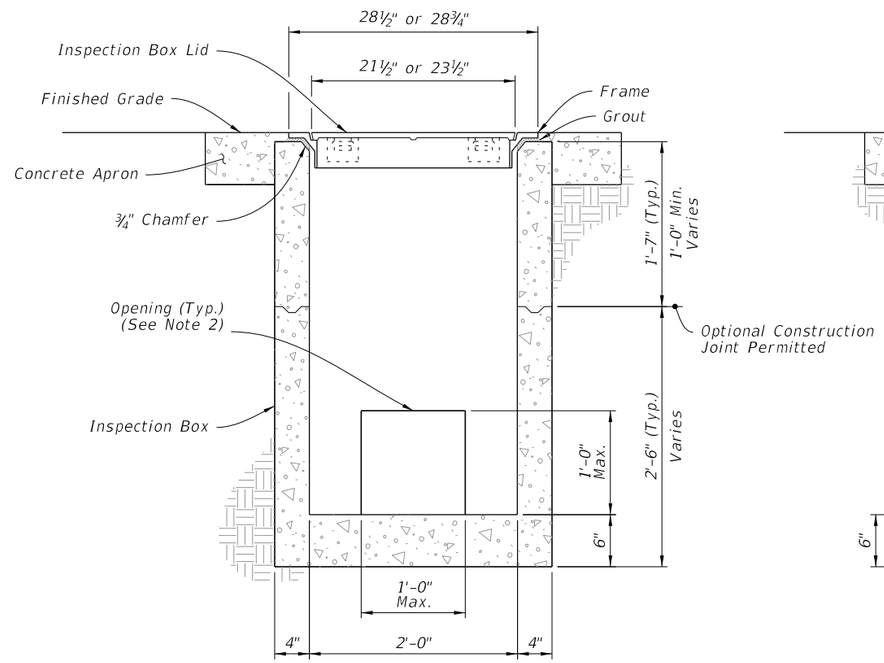

ELEVATION
(FRONT VIEW)

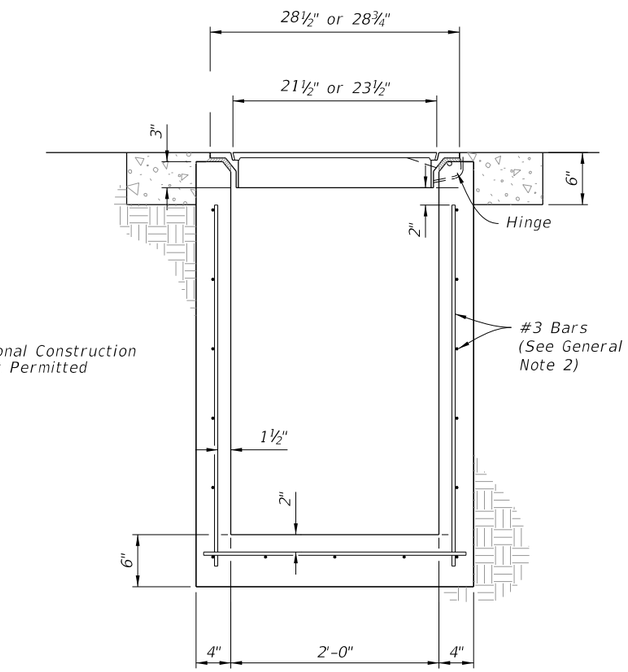

ELEVATION
(SIDE VIEW)

INSPECTION BOX DETAILS

NOTES:

1. Cast or field cut 2 ~ 4" wide slots for hinges. Grout around hinge covers.

2. One or more sides may have an opening, see Plans for required openings. Grout around opening to seal between underdrain pipe and inspection box.

TYPICAL INSPECTION BOX INSTALLATION

LAST REVISION	REVISION	DESCRIPTION:			INDEX	SHEET
11/01/19			FDOT FY 2022-23 STANDARD PLANS	UNDERDRAIN INSPECTION BOX	440-002	2 of 3

9/21/2021 1:48:04 PM

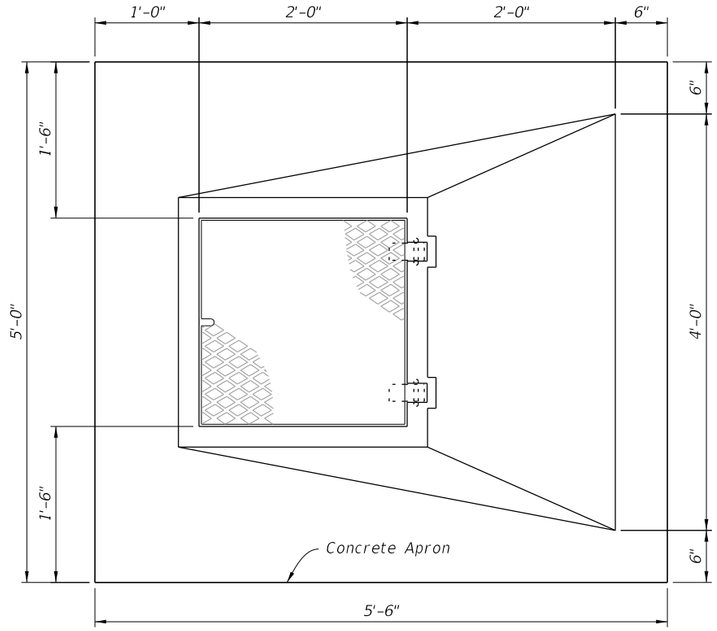

PLAN

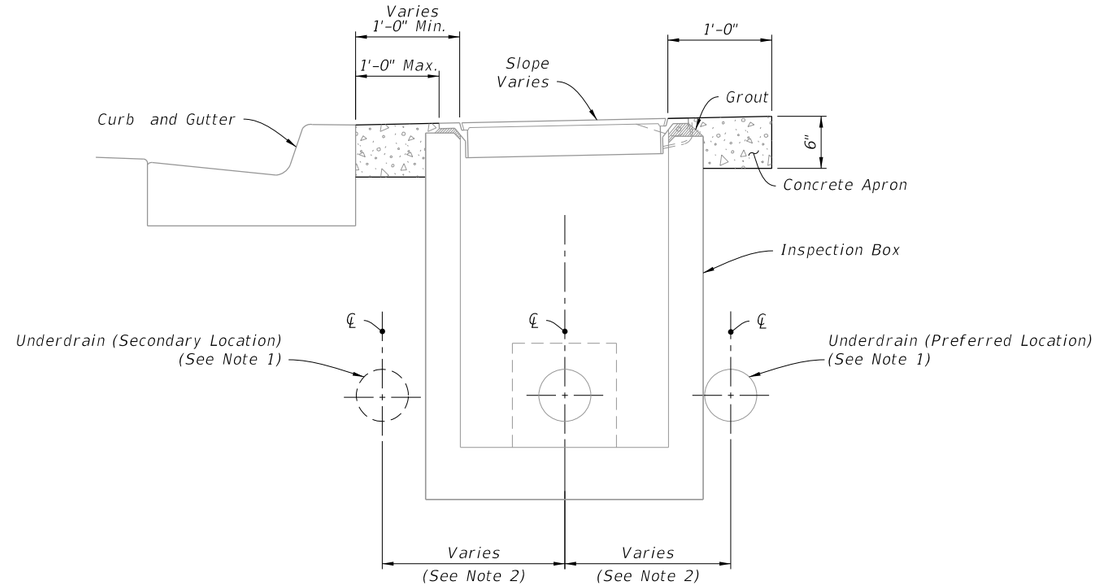

TYPICAL URBAN INSTALLATION

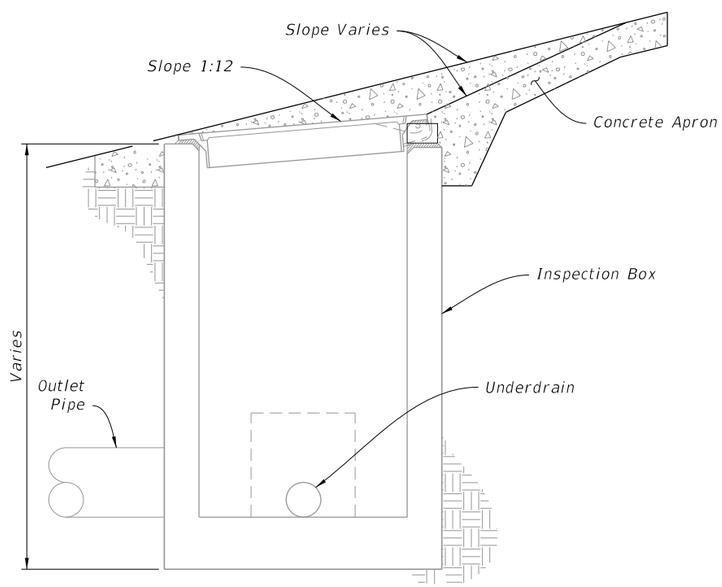

ELEVATION
(SIDE VIEW)

INSTALLATION ON SLOPE

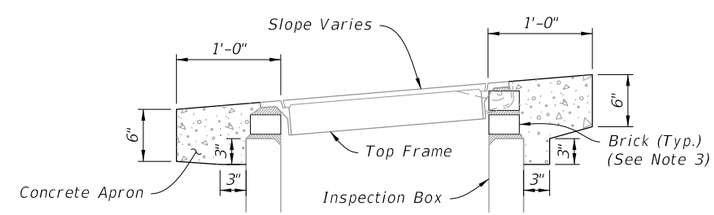

TOP ADJUSTMENT

NOTES:

1. See Index 120-002 for Underdrain placement.
2. Curve the Underdrain to connect to the Inspection Box.
3. A maximum of 2 adjustment courses of brick is permitted.

TYPICAL URBAN, SLOPE, AND TOP ADJUSTMENT INSTALLATIONS

9/21/2021 1:48:05 PM

LAST REVISION	REVISION	DESCRIPTION:			INDEX	SHEET
11/01/19			FY 2022-23 STANDARD PLANS	UNDERDRAIN INSPECTION BOX	440-002	3 of 3

GENERAL NOTES:

1. Place concrete pipe with the slots positioned on sides.
2. Alignment joints are standard (gaskets not required). Recorrugation of metal pipe ends not required.
3. Install Type D-3 filter fabric in accordance with Specification 985. Lap all filter fabric joints a minimum of one (1) foot.
4. Construct the standard cross section unless other section(s) described or detailed in the plans.
5. See Index 430-001 for supplemental details.
6. Take the necessary precautions to prevent contamination of the trench with sand, silt and foreign materials.

TABLE OF CONTENTS:

Sheet	Description
1	General Notes and Contents
2	French Drain System
3	Concrete Slotted Pipe Options

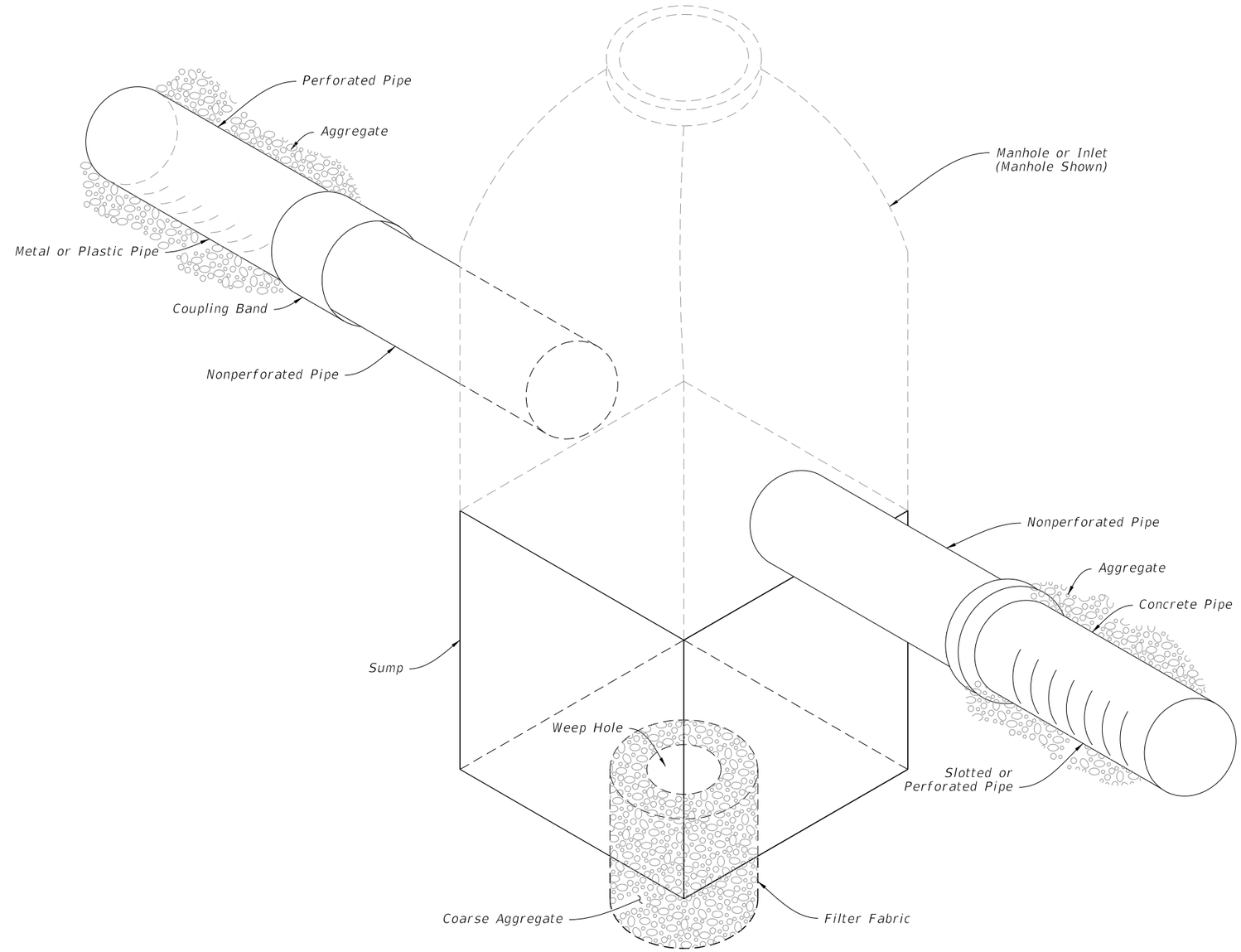

FRENCH DRAIN ASSEMBLY

9/21/2021 1:48:05 PM

LAST REVISION	REVISION	DESCRIPTION:			INDEX	SHEET
11/01/19			FY 2022-23 STANDARD PLANS	FRENCH DRAIN	443-001	1 of 3

NOTES:

1. Construct sumps unless excluded in the Plans.
2. For additional sump bottom information see Index 425-001.
3. Construct weep holes only where called for in the Plans.
4. Only cast and ductile iron sanitary sewer, or cast iron, ductile and steel water mains will be allowed to pass directly through french drain (without sleeve).
5. Use only steel, cast or ductile iron sleeves.
6. No slots or perforations.

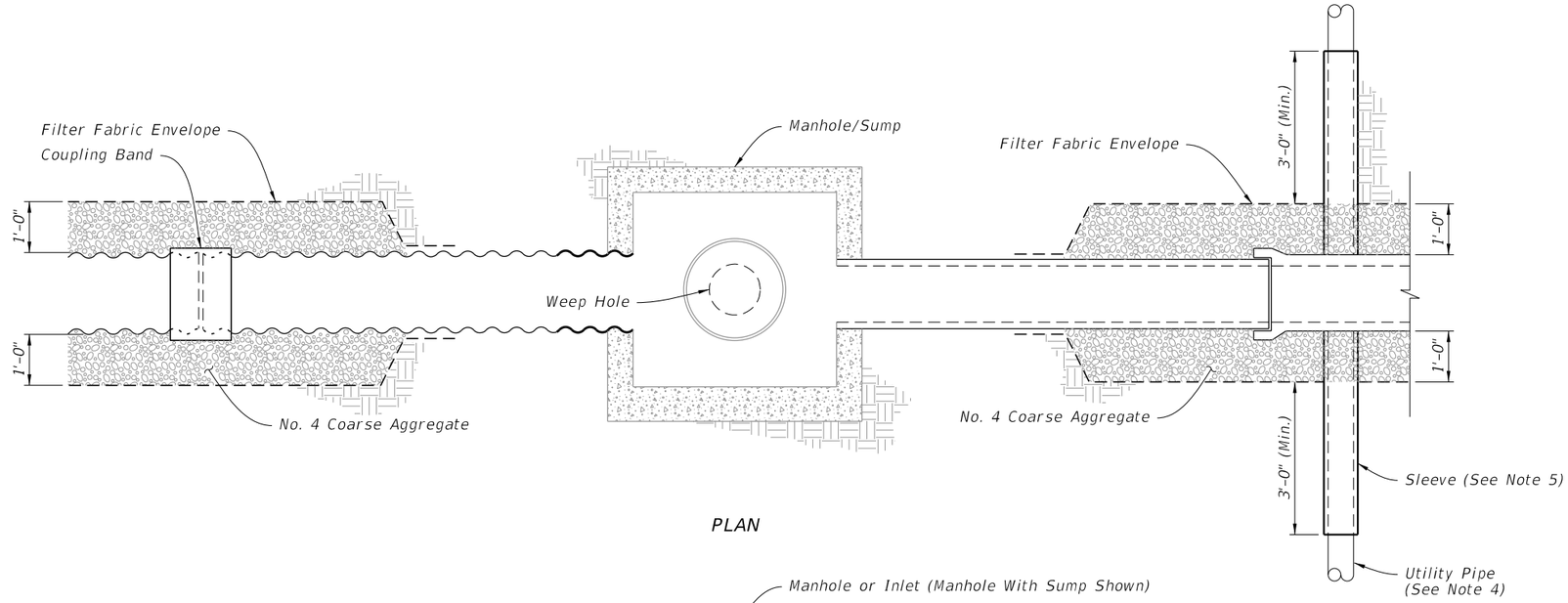

PLAN

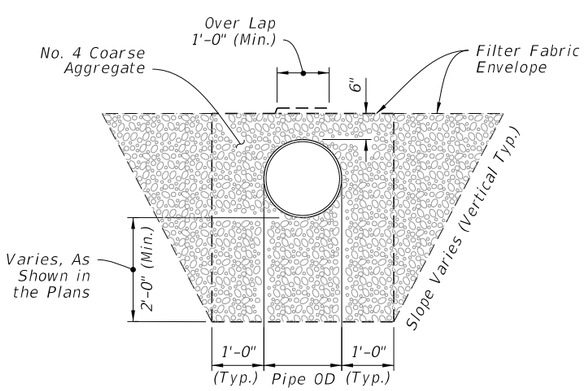

SECTION A-A

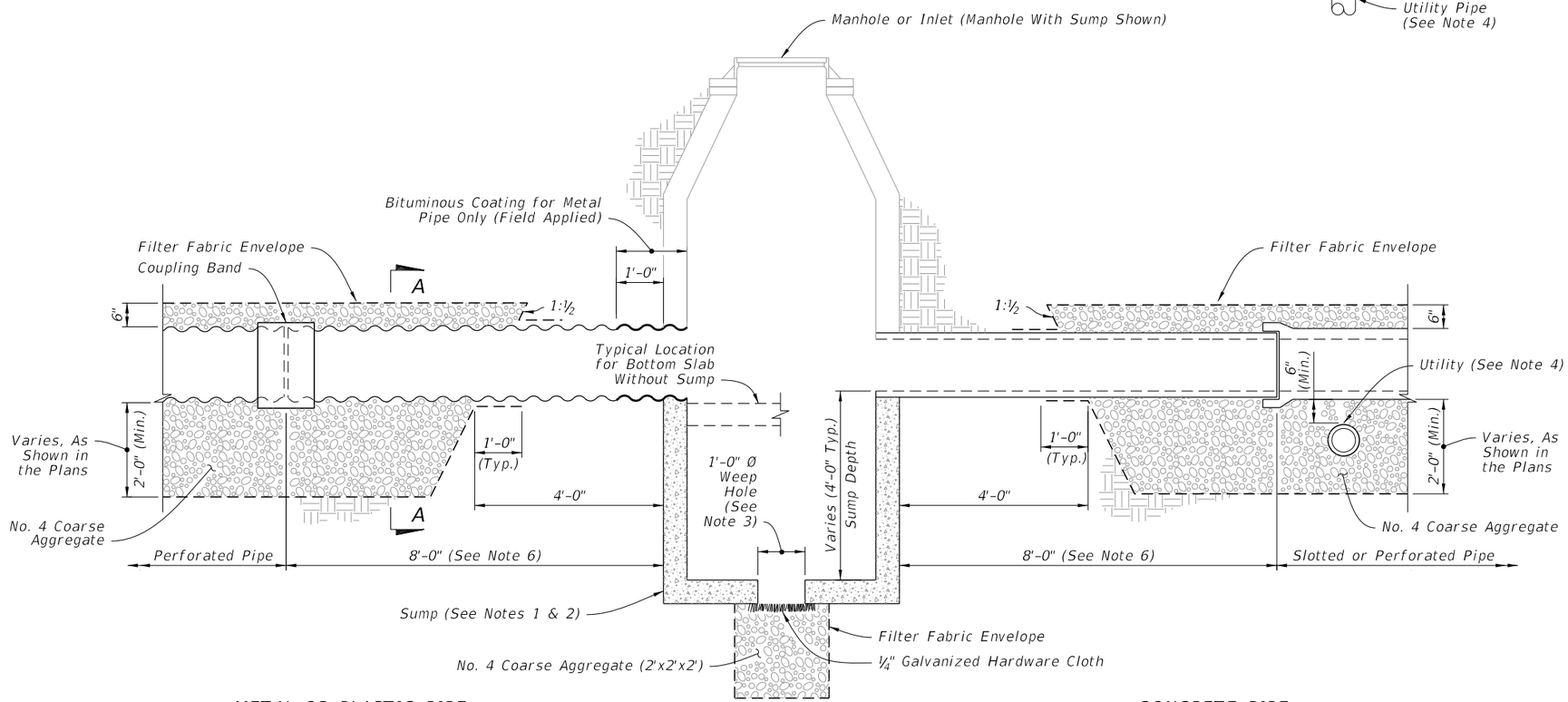

ELEVATION

FRENCH DRAIN
(Round Pipe Shown)

FRENCH DRAIN SYSTEM

LAST REVISION	REVISION	DESCRIPTION:			INDEX	SHEET
11/01/19			FY 2022-23 STANDARD PLANS	FRENCH DRAIN	443-001	2 of 3

9/21/2021 1:48:06 PM

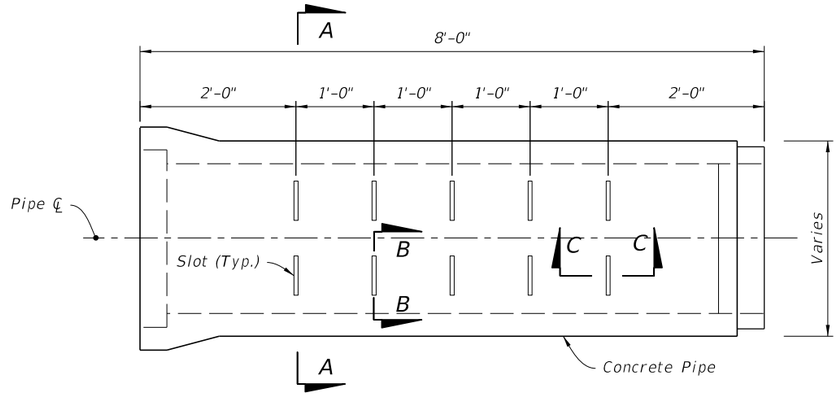

SIDE VIEW

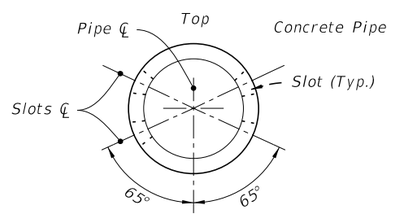

15" to 30"

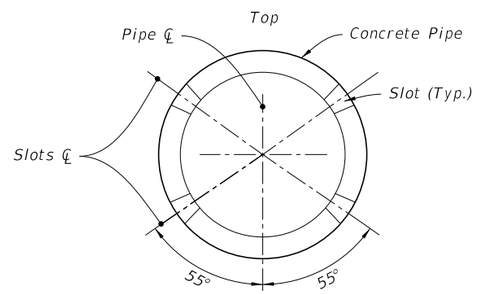

36" to 72"

SECTION A-A

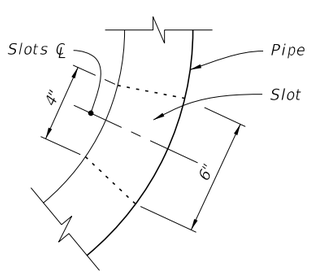

SECTION B-B

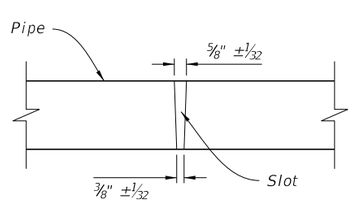

SECTION C-C

OPTION A - ROUND PIPE

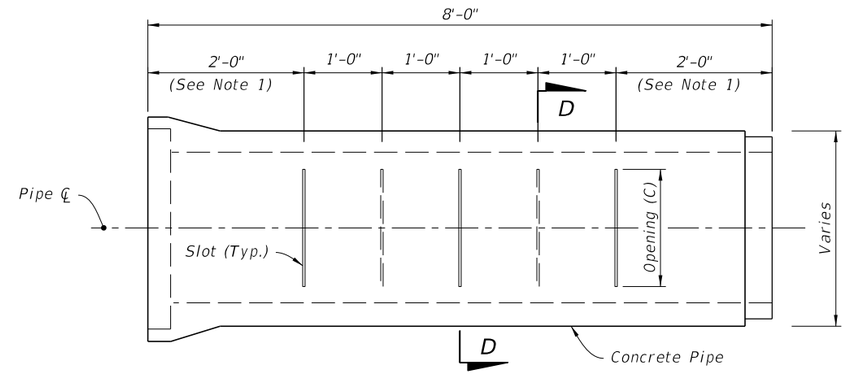

SIDE VIEW

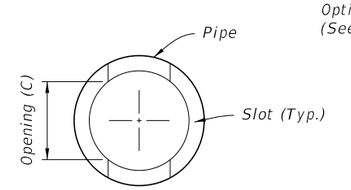

ROUND PIPE

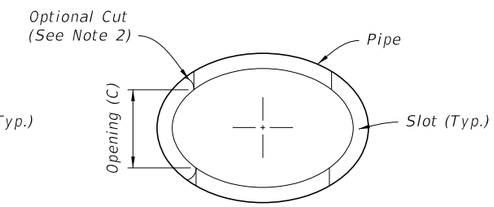

ELLIPTICAL PIPE

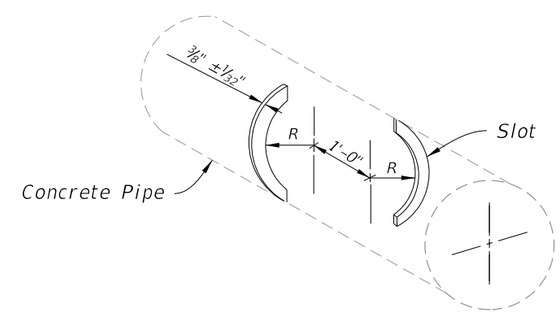

ISOMETRIC VIEW
(Round Pipe Shown)

SECTION D-D

OPTION B - ROUND OR ELLIPTICAL PIPE

NOTES:

1. 2'-0" for 8'-0" joints of pipe; 2'-6" for 12'-0" joints of pipe
2. A curved cut is acceptable provided the control dimension is maintained.

ROUND PIPE		
Pipe Size	Slot Cut Opening (C)	
	Min.	Max.
15"	12"	14"
18"	12"	14"
24"	16"	18"
30"	16"	18"
36"	22"	24"
42"	22"	24"
48"	22"	24"
54"	24"	26"
60"	24"	26"
66"	24"	26"
72"	24"	26"

ELLIPTICAL PIPE		
Pipe Size	Slot Cut Opening (C)	
	Min.	Max.
14"x23"	10"	12"
19"x30"	14"	16"
24"x38"	14"	16"
29"x45"	20"	22"
34"x53"	20"	22"
38"x60"	20"	22"

CONCRETE SLOTTED PIPE OPTIONS

GENERAL NOTES:

1. The French Drain Skimmer is a hooded cover, mounted over an outlet in a catchbasin, that prevents oil and floating debris from exiting the basin.

2. Place neoprene gasket material between the skimmer and the catchbasin at all points of contact. Trim the gasket to extend 1/2 inch beyond the joint on all sides.

3. Provide skimmer baffle, cleanout pipe and angles constructed of either galvanized steel, aluminum, polyvinyl chloride, polyethylene, fiberglass or acrylonitrite butadiene styrene. Provide hot-dip galvanized steel components, unless stainless.

4. Use Mounting hardware, hinges and latches made of stainless steel. Loss prevention device can use either stainless steel chain or riveted nylon strap.

5. Provide skimmer bodies (baffles) and cleanout pipe meeting Specification 943 for steel, 945 for aluminum or 948 for plastics.

6. Work this Index in accordance with Specification 425.

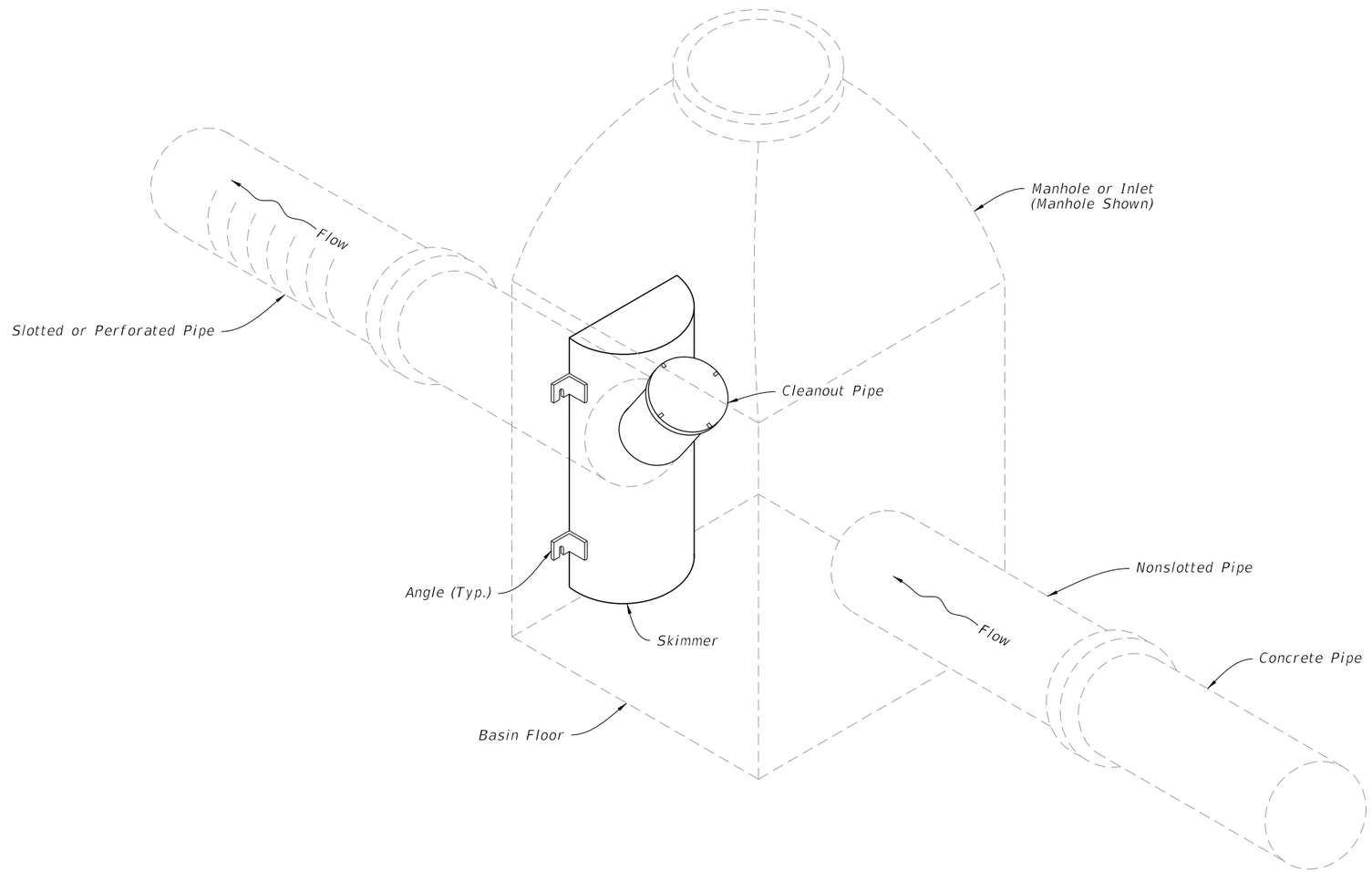

TABLE OF CONTENTS:

Sheet	Description
1	General Notes and Contents
2	Type I Skimmers
3	Type II Skimmers

SKIMMER FOR FRENCH DRAIN OUTLETS ASSEMBLY

9/21/2021 1:48:07 PM

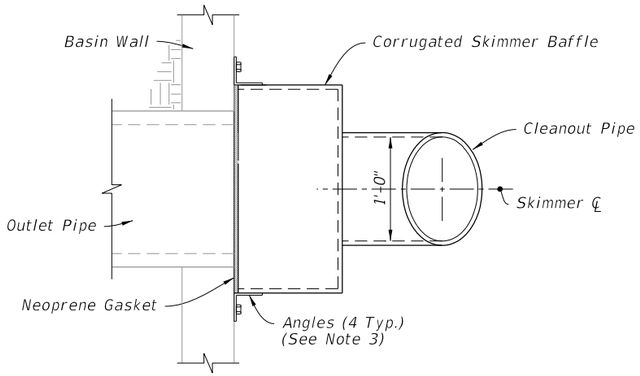

PLAN

NOTES:

1. Conform the backs of skimmers to the shape of the basin walls on which they are mounted.
2. "R" is the radii required for curved back skimmers. Applies to both skimmer types. See Plans.
3. Weld Angles at all points of contact with skimmer.

DIMENSION TABLE			
OUTLET PIPE	A	B	C
18"	12"	42"	24"
24"	15"	48"	30"
30"	18"	54"	36"
36"	21"	60"	42"

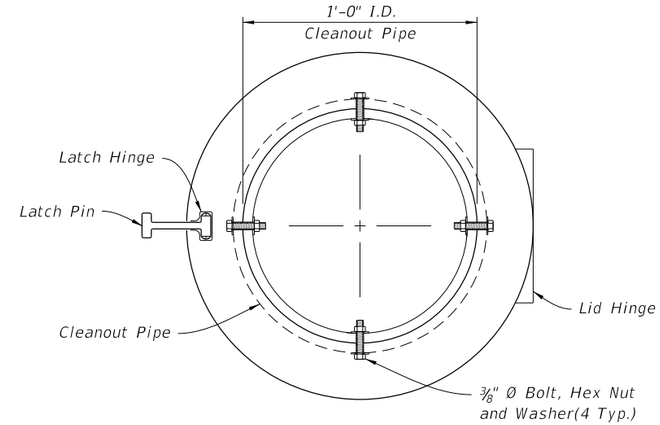

PLAN

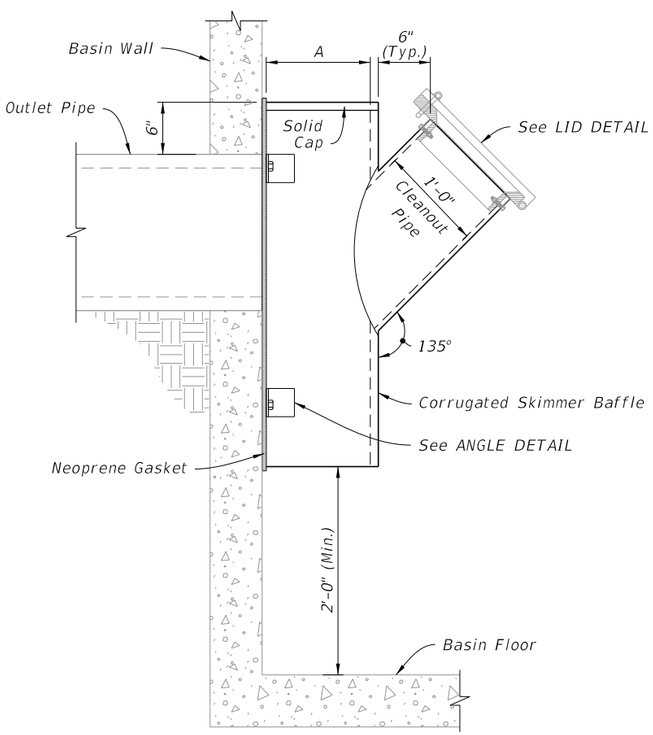

SIDE ELEVATION

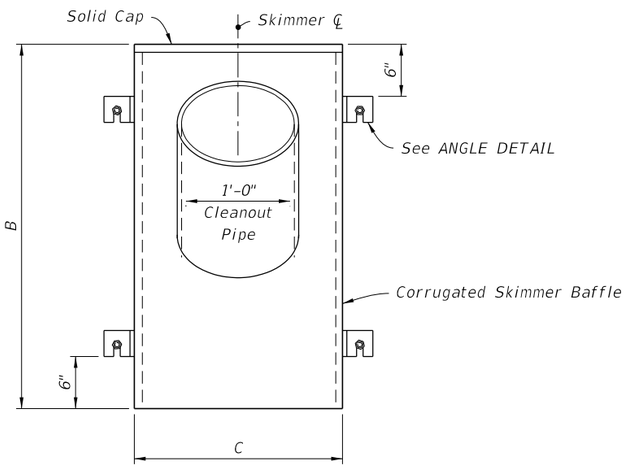

FRONT ELEVATION

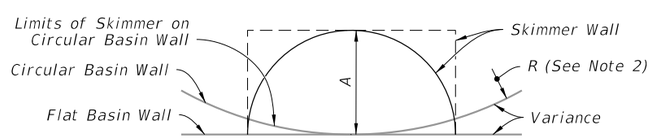

SCHEMATIC VIEW

TYPE I DETAILS

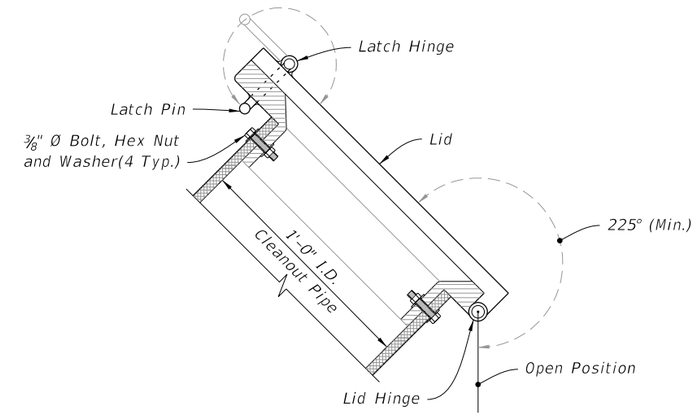

SIDE ELEVATION

LID DETAIL

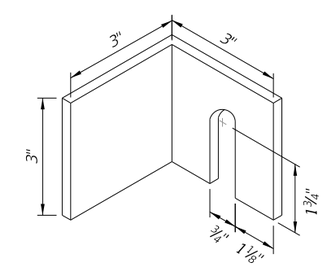

ANGLE DETAIL

TYPE I SKIMMERS

9/21/2021 1:48:08 PM

LAST REVISION	REVISION	DESCRIPTION:			INDEX	SHEET
11/01/19			FDOT FY 2022-23 STANDARD PLANS	SKIMMERS FOR FRENCH DRAIN OUTLETS	443-002	2 of 3

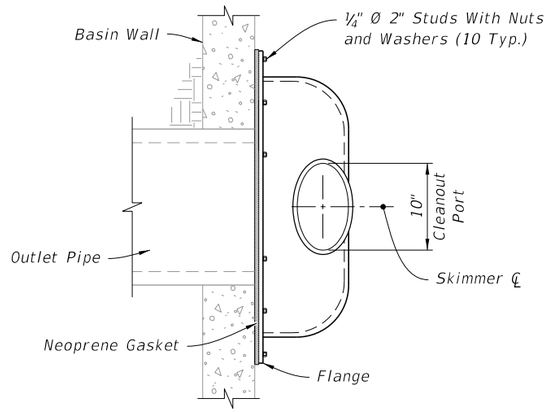

PLAN

NOTE:

1. Install a gasket for the cleanout with either a threaded screw-in lid or a lid secured by four stainless steel quick-release latches.

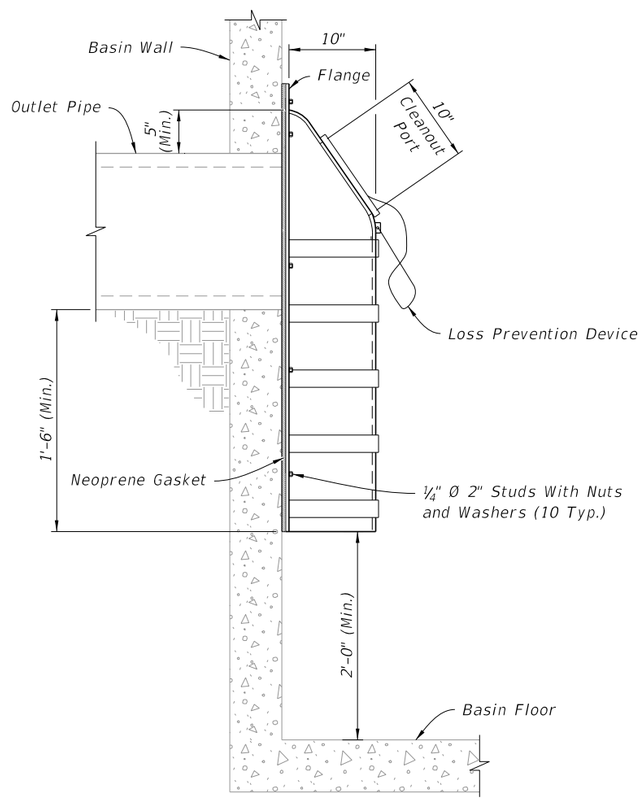

SIDE ELEVATION

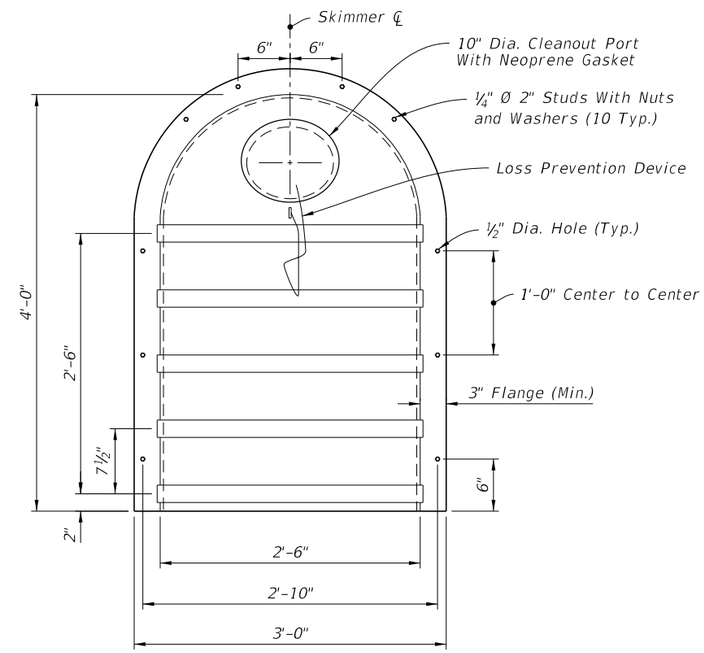

FRONT ELEVATION

TYPE II DETAILS

TYPE II SKIMMERS

LAST REVISION	REVISION	DESCRIPTION:			INDEX	SHEET
11/01/19			FDOT FY 2022-23 STANDARD PLANS	SKIMMERS FOR FRENCH DRAIN OUTLETS	443-002	3 of 3

9/21/2021 1:48:09 PM

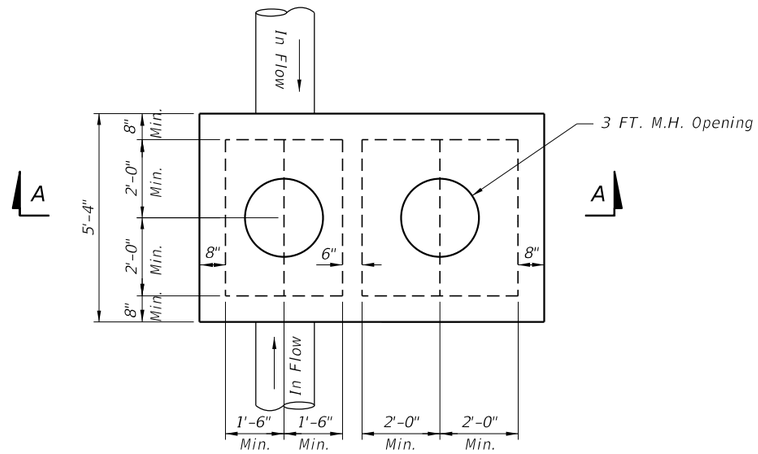

TOP SLAB PLAN

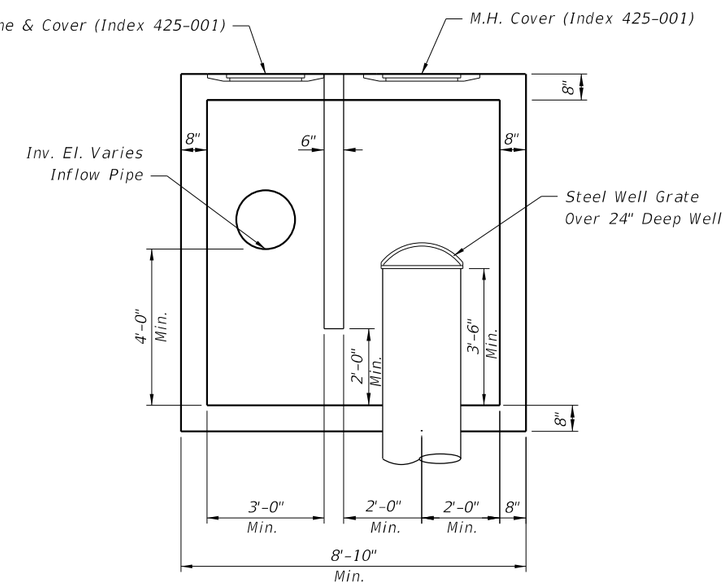

SECTION A-A

STRUCTURE WITH NO OUTFLOW

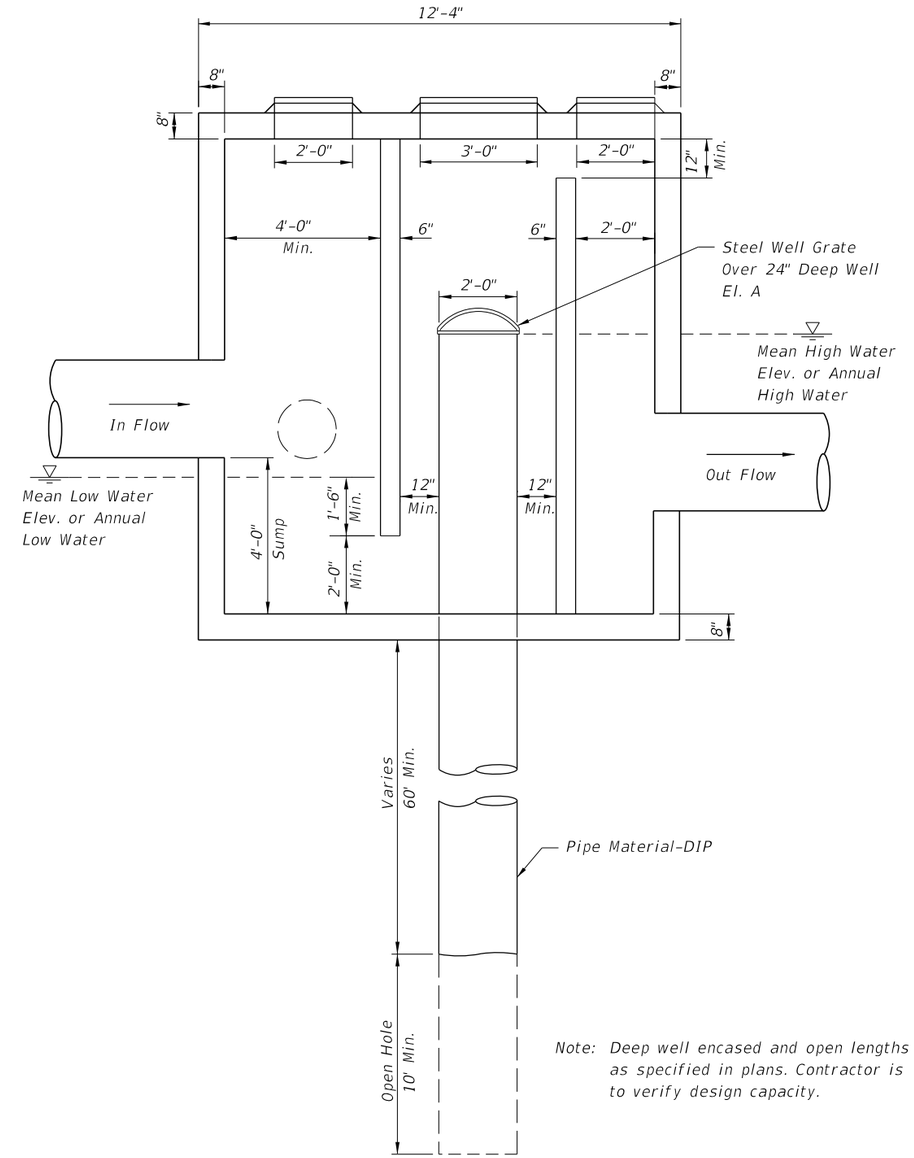

Note: Deep well encased and open lengths as specified in plans. Contractor is to verify design capacity.

SPECIAL MANHOLE STRUCTURE
DETAIL WITH OUTFALL

24" STEEL WELL GRATE

Heavy duty "bee hive" grate

Openings: 1-½" maximum

Total Opening: 1.7 sq ft minimum

For 24" well, outer diameter = 29"

Steel well grate to be installed over 24" deep well.

Steel grate to be hot dipped galvanized after fabrication, see Specification Section 962.

DESIGN NOTES:

1. Depth of Casing Varies, 60' min.

2. Depth of Open Hole, 10'-20'.

3. Actual Size Of The Inflow And Outflow Chambers Will Be Determined By The Size Of The Pipes (Refer To Table 3 Of Index 425-010). The Width Of The Box Shall Be Constant Based On The Largest Pipe. The Length Is To Be Adjusted Based On Size and Orientation Of The Pipes.

9/21/2021 1:48:09 PM

LAST REVISION	REVISION	DESCRIPTION:			INDEX	SHEET
11/01/17			FY 2022-23 STANDARD PLANS	DEEP WELL INJECTION BOX	444-T01	1 of 1

GENERAL NOTES:

1. Do not leave trench greater than 2' in depth overnight. Barricade trenches at all times.

2. Construct concrete pavement subdrainage adjacent to the low edge of the roadway pavement and under travel lanes, auxiliary pavement and shoulders, as called for in the plans. Extend the concrete pavement subdrainage 50' beyond and begin 50' before the flat point (100' overlap) when the low edge shifts between outside and inside edges of pavement . Place concrete pavement subdrainage on the low side of ramps for crossroad terminals.

3. Install concrete pavement subdrainage on a grade parallel with the edge of pavement profile, except on profiles flatter than one-tenth percent (0.10%) install the concrete pavement subdrainage on a minimum grade of one-tenth percent (0.10%).

4. Remove adhering base material and soil from the vertical face of the concrete immediately prior to placing the filter fabric.

5. Submit a procedure for holding the filter fabric in position on the vertical face of the trench for approval by the Engineer prior to placing draincrete.

6. Cap the upper end of each separate run of the concrete pavement subdrainage pipe.

7. Install outlet pipes at 500' maximum intervals. Use elbows or 1/8 bends to connect the outlet pipe to the concrete pavement subdrain pipe. Use elbows or bends of the same material as the outlet pipe.

   Stub outlet pipes into existing inlets or into existing ditch pavements at an elevation 6" above the inlet flowline or ditch bottom when directed by the Engineer. Concrete apron and bordering sod are not required for stubbed outlets, but replacement sodding will be required at trenches for pipes stubbed into paved ditches.

   Install a single outlet apron for separate outlet pipes of concrete pavement subdrainage from opposite directions in sag vertical curves.

   Install backfill consisting of cohesive soils around outlet pipes.

8. Replace existing paved shoulder removed for the construction of outlet pipes with Type SP asphaltic concrete at the rate of 500 LB per SY.

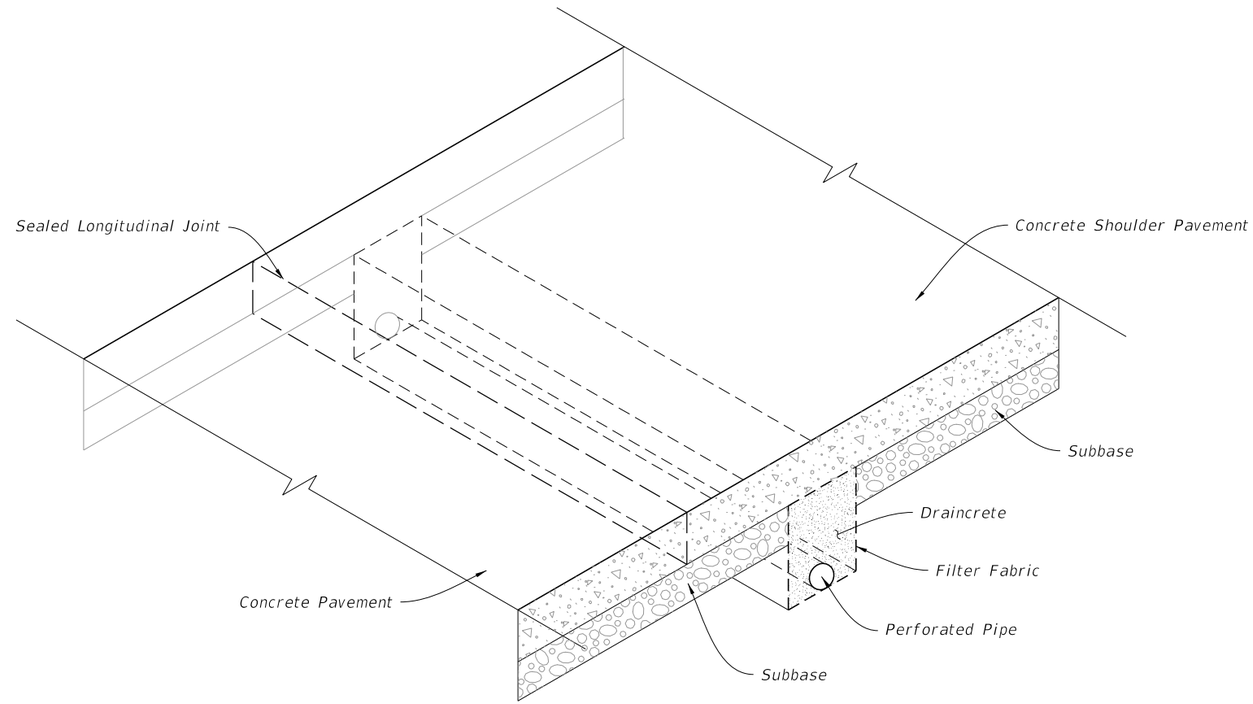

DRAINCRETE SUBDRAINAGE

TABLE OF CONTENTS:

Sheet	Description
1	General Notes and Contents
2	Edgedrain and Outlet
3	New Construction
4	Rehabilitation

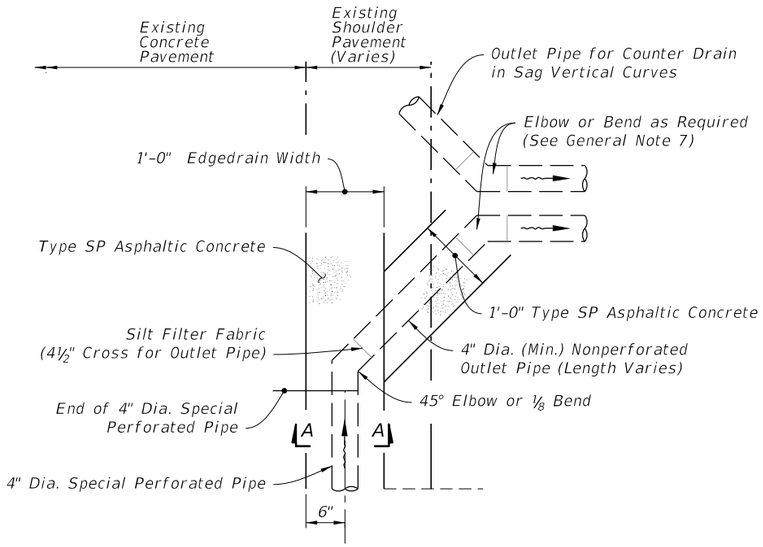

PLAN

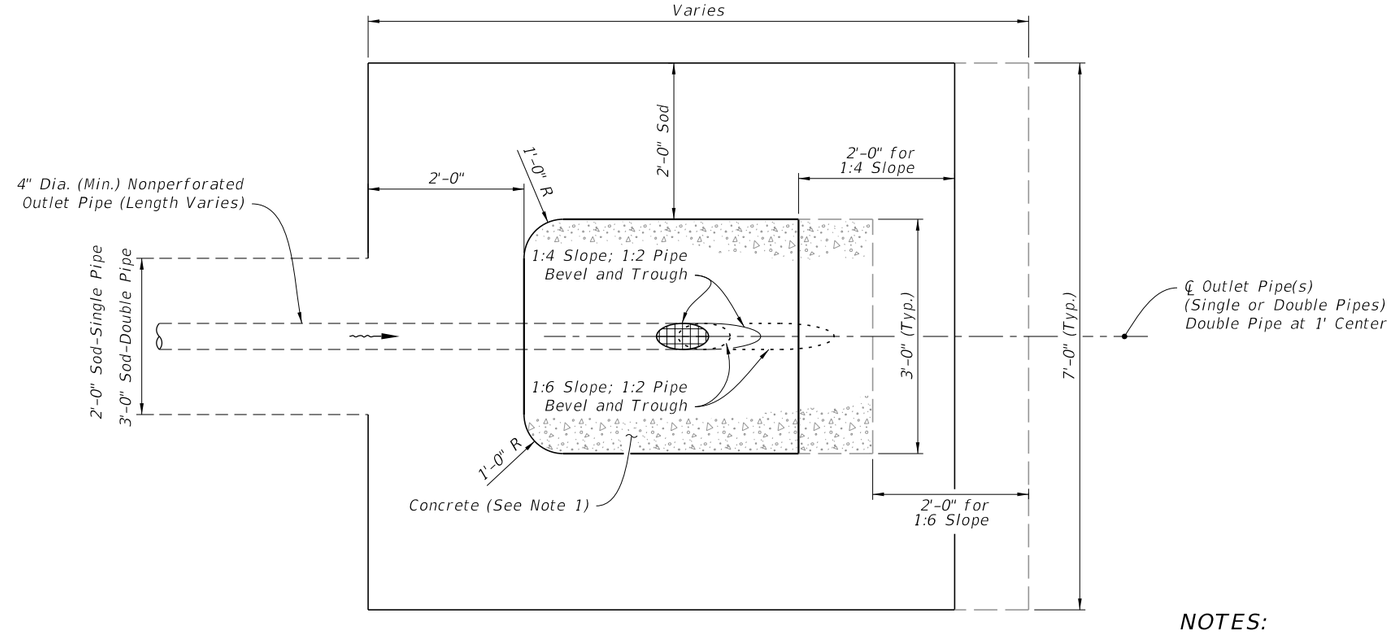

PLAN

NOTES:

1. Install 6" thick Class NS concrete, 0.19 cubic yard for 1:4 slopes and 0.25 cubic yard for 1:6 slopes.
2. Install perimeter sod, 4.7 square feet for 1:4 slopes and 5.5 square feet for 1:6 Slopes.
3. 1.75' std. for grassed ditches; 0.5' std. for paved ditches [less is acceptable to provide minimum 0.1% outlet pipe slope]

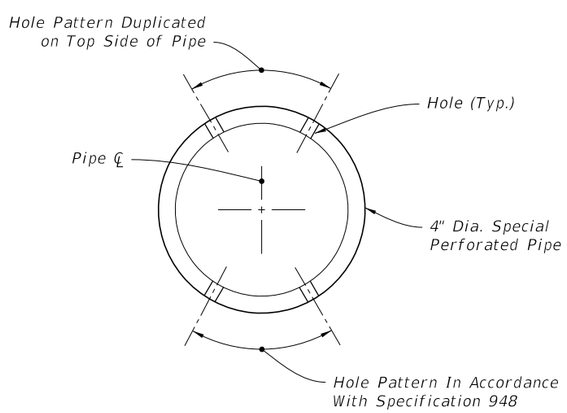

SECTION A-A

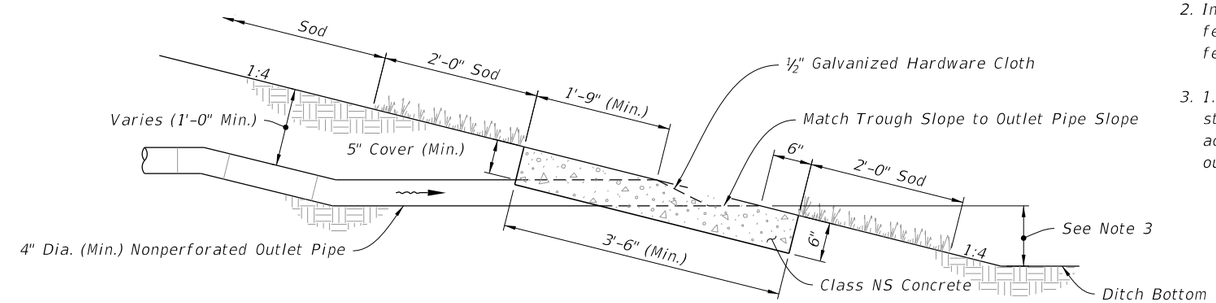

1:4 SLOPE

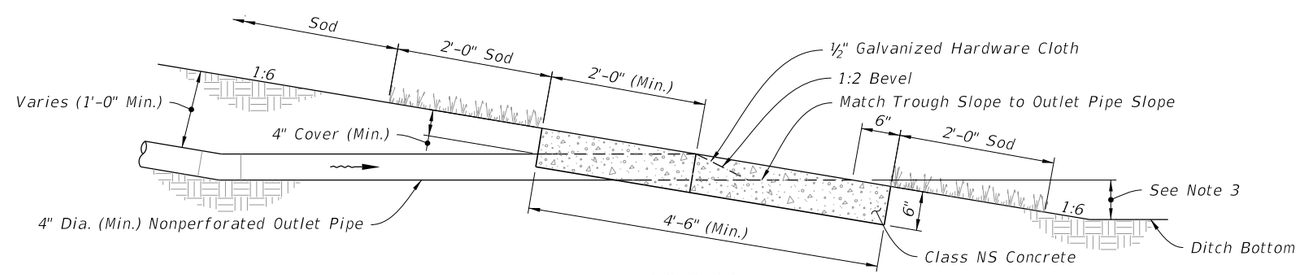

1:6 SLOPE

ELEVATIONS

EDGEDRAIN OUTLET

LAST REVISION	REVISION	DESCRIPTION:			INDEX	SHEET
11/01/19			FY 2022-23 STANDARD PLANS	CONCRETE PAVEMENT SUBDRAINAGE	446-001	2 of 4

9/21/2021 1:48:11 PM

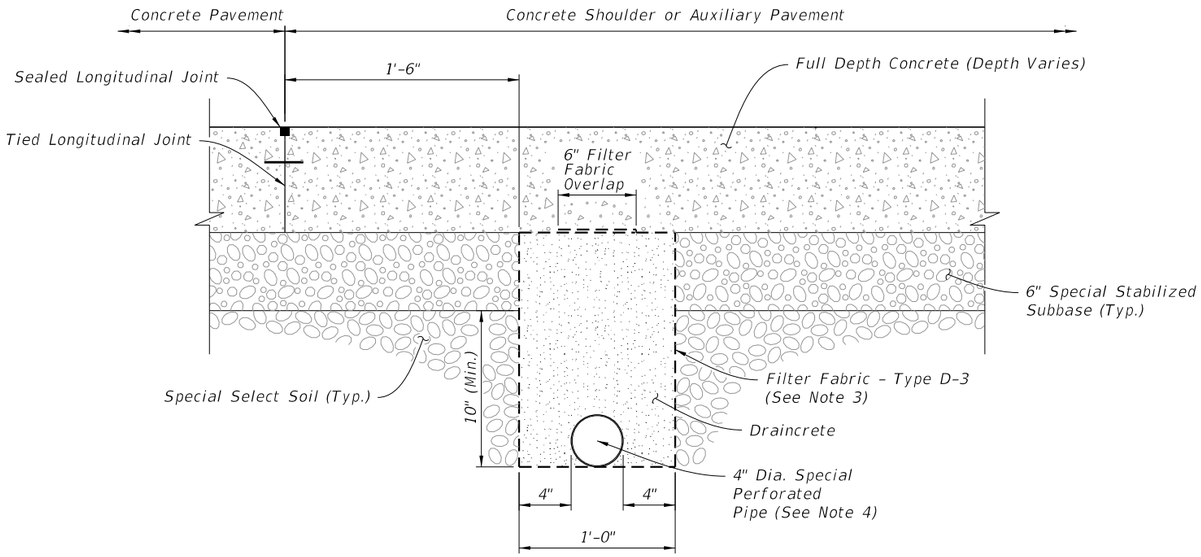

SPECIAL SELECT SOIL BASE

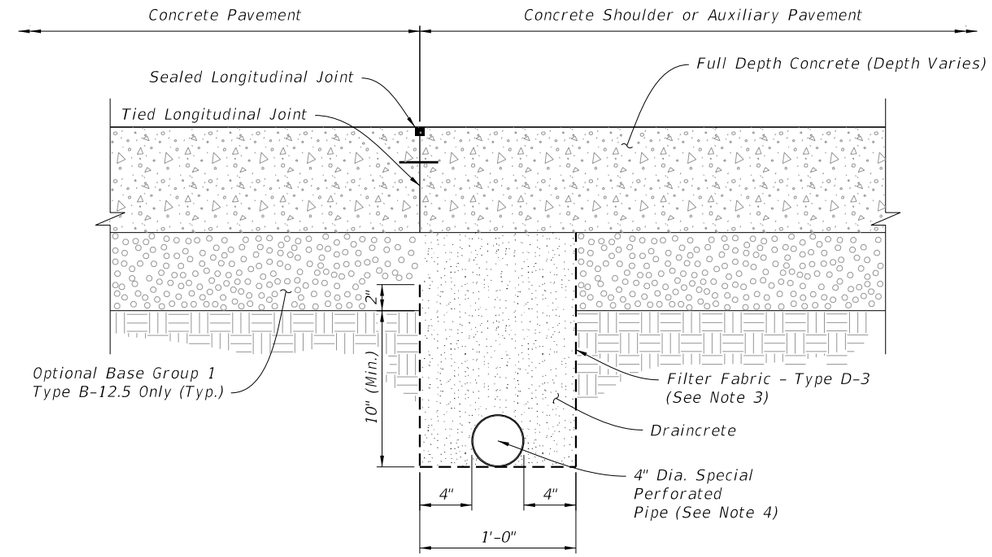

ASPHALT BASE

CONCRETE SHOULDERS AND AUXILIARY PAVEMENT

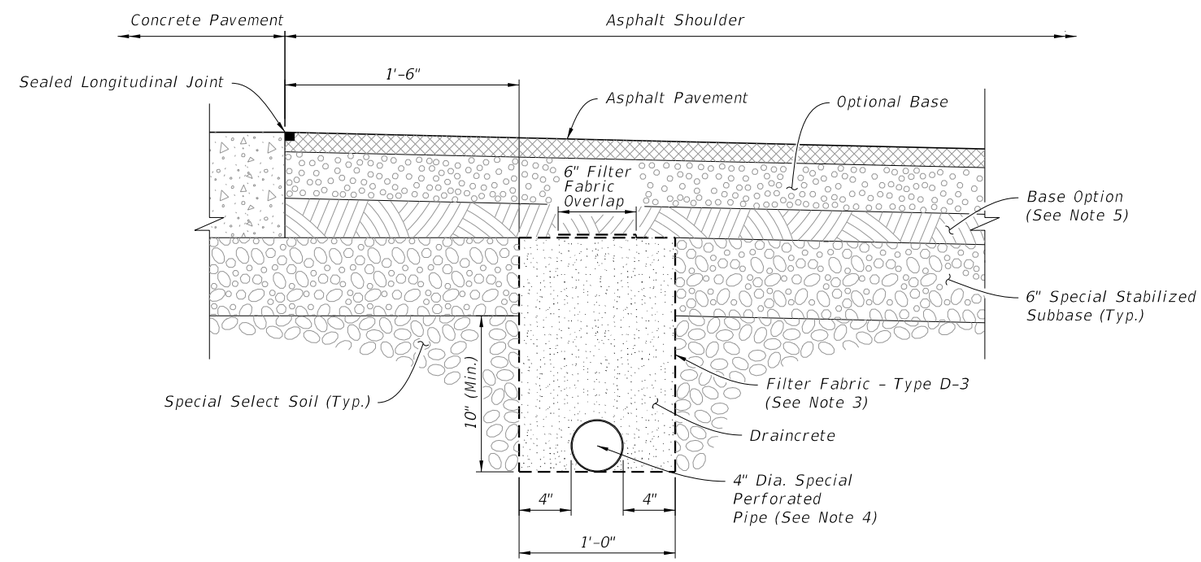

SPECIAL SELECT SOIL BASE

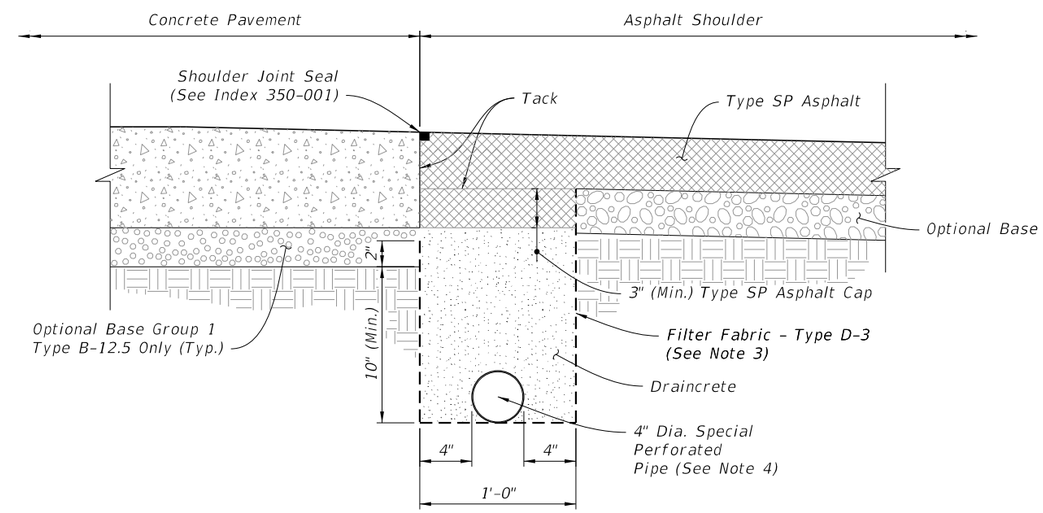

ASPHALT BASE

ASPHALT SHOULDERS

NOTES:

1. The edgedrain sections for DRAINCRETE SUBDRAINAGE are applicable to pavement construction identified as RIGID PAVEMENT on Index 120-001.
2. Confine the construction of draincrete edgedrain to an area in which the entire operation can be carried out in five (5) work days, unless another construction period is called for in the plans, with sufficient time allowed for the draincrete to set before placement of pavement.
3. Install the filter fabric in accordance with Specification 514.
4. Install only noncorrugated or smooth lined corrugated pipe.
5. At the Contractor's option this area may be constructed of Optional Base material (Specification 285) or special stabilized subbase.

NEW CONSTRUCTION

LAST REVISION	REVISION	DESCRIPTION:				INDEX	SHEET
11/01/19			FDOT	FY 2022-23 STANDARD PLANS	CONCRETE PAVEMENT SUBDRAINAGE	446-001	3 of 4

9/21/2021 1:48:11 PM

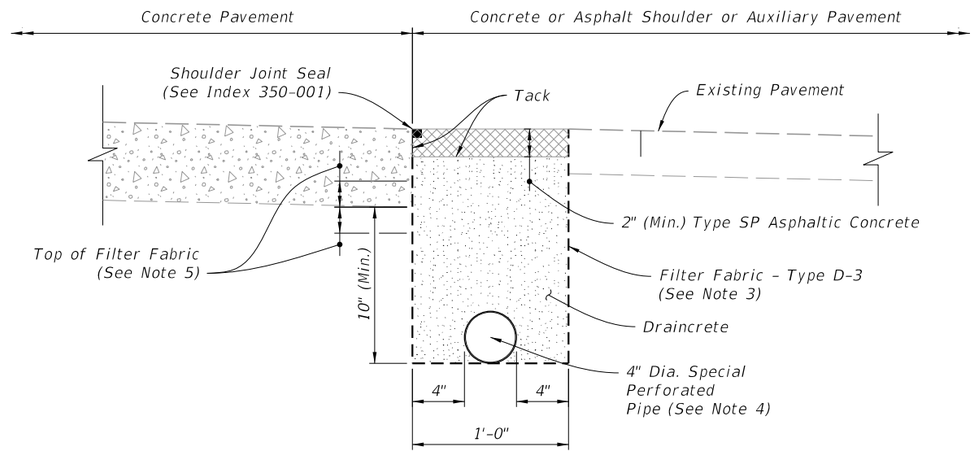

EXISTING SHOULDERS

NOTES:

1. The edgedrain sections for DRAINCRETE SUBDRAINAGE are applicable to pavement construction identified as RIGID PAVEMENT on Index 120-001.
2. Confine the construction of draincrete edgedrain to an area in which the entire operation can be carried out in five (5) work days, unless another construction period is called for in the plans, with sufficient time allowed for the draincrete to set before placement of pavement.
3. Install the filter fabric in accordance with Specification 514.
4. Install only noncorrugated or smooth lined corrugated pipe.
5. Install Filter Fabric 2" below bottom of pavement for cement stabilized, soil cement and econocrete subbases and 2" above bottom of pavement for other subbases.

CROSS REFERENCES:
For Dimensions L and X see Sheet Pile Wall Data Table in Structures Plans.

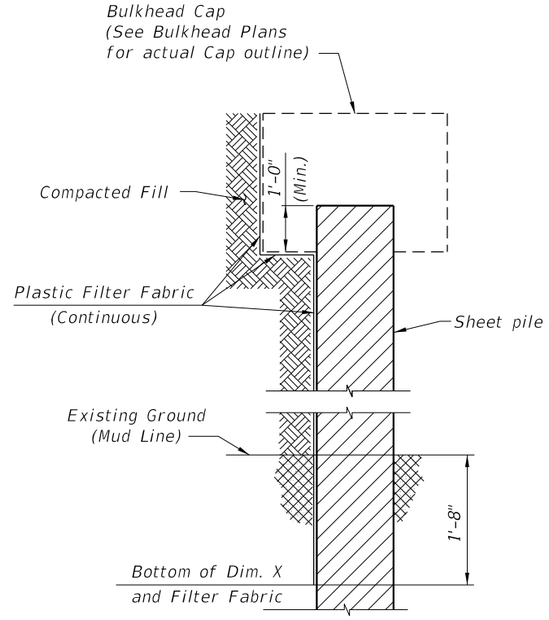

SECTION THRU BULKHEAD

(Showing Plastic Filter Fabric)

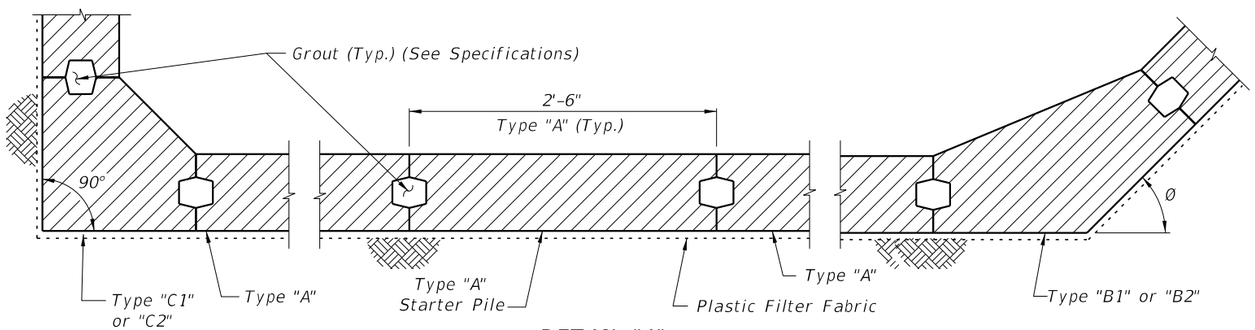

DETAIL "A"

(Cap and Anchoring System Not Shown)
(Section Taken Above Dimension X)

NOTE: Detail "A" shows a Part-Plan View of an assumed bulkhead.
See Bulkhead plans for actual Plan View.

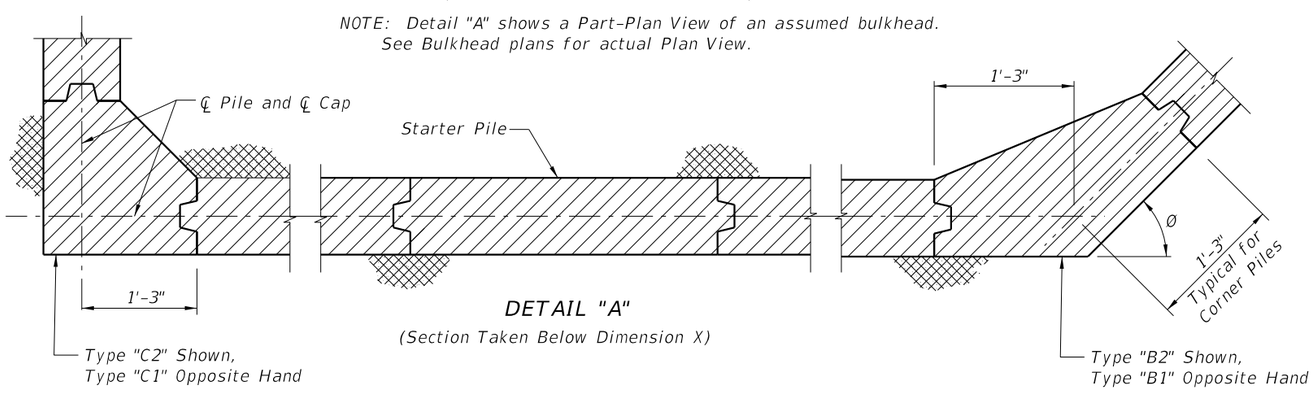

DETAIL "A"

(Section Taken Below Dimension X)

SHEET PILE DESIGN CRITERIA AND NOTES

DESCRIPTION:
This Index includes details for five types of piles with two thicknesses.
Types "B1", "B2", "C1" and "C2" piles (corner piles) are of reinforced concrete construction, and Type "A" is of prestressed concrete construction. The piles shall be manufactured, cured and installed in accordance with the requirements of the contract documents.

MATERIALS: (for materials not listed refer to the Specifications)
CONCRETE

Class:	V (Special) for slightly and moderately aggressive environments V (Special) with Highly Reactive Pozzolans for extremely aggressive environments
Unit weight:	150 pcf
Modulus of Elasticity:	Based on the use of Florida limerock concrete

REINFORCING STEEL
ASTM A615 Grade 60

PRESTRESSING STEEL
ASTM A416 Grade 270 (Low-Relaxation Strand)

DESIGN PARAMETERS:
Type "A"

Concrete Compressive Strength at release of prestressing:	4000 psi minimum
Uniform compression after prestressing losses:	1000 psi minimum
Pick-up, Storage and Transportation:	0.0 psi tension with 1.5 times pile self weight

Types "B1", "B2", "C1" & "C2"
Pick-up, Storage and Transportation: Minimum compressive strength f'ci ≥ 4000 psi required.

ENVIRONMENT:
The pile designs are applicable to all Environments.

PLASTIC FILTER FABRIC:
The plastic filter fabric shall extend to the bottom of the "X" dimension.

PILE PICK-UP AND HANDLING:
Type "A"
Pick-up of pile may be either a single point pick-up or a two point pick-up as shown below.
Types "B1", "B2", "C1" & "C2"
Two point pick-up for lifting out of forms & two point support for storage & transportation.
Single point pick-up for installation only.

PILE FIT-UP:
The 2'-6" Sheet Pile dimension is nominal. This dimension may be shortened by the Manufacturer up to ½" to allow for Sheet Pile fit-up in its final position. Minimum Sheet Pile width is 2'-5½". No changes shall be made to the tongues or grooves.

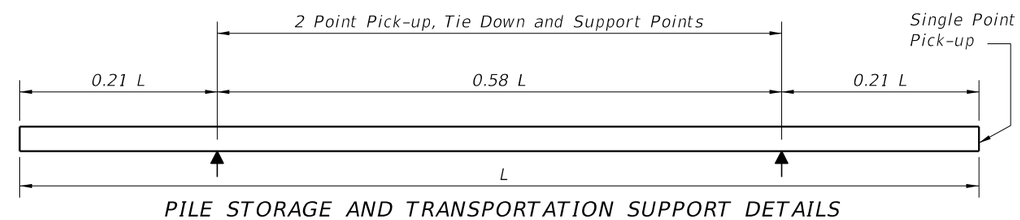

PILE STORAGE AND TRANSPORTATION SUPPORT DETAILS

NOTES AND DETAILS

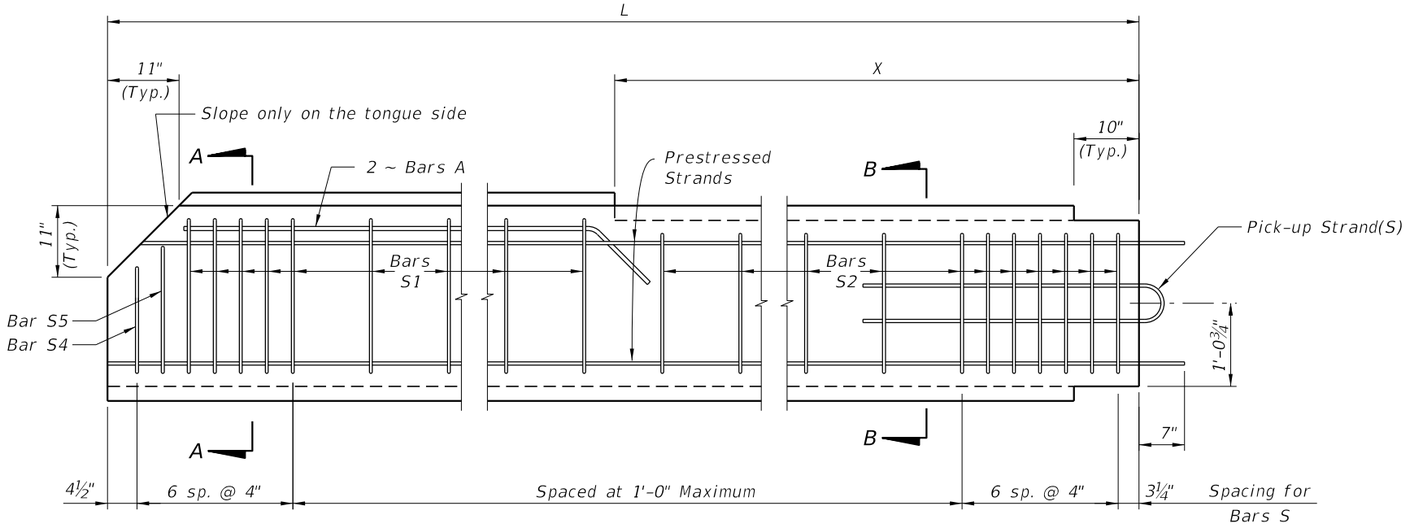

TYPICAL PILE

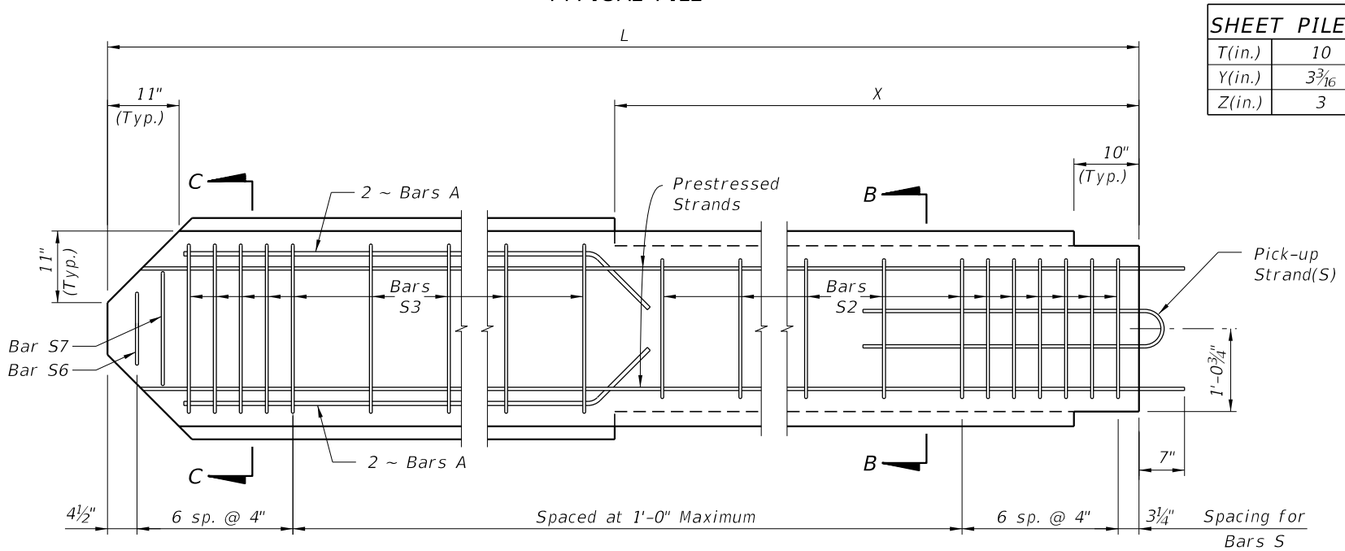

STARTER PILE

SHEET PILE DIMENSIONS		
T(in.)	10	12
Y(in.)	3 3/16	4 3/16
Z(in.)	3	4

WALL THICKNESS	STRAND DIA. (in.)	MAXIMUM L	n	D (in.)	TOTAL # OF STRANDS	INITIAL (JACKING) FORCE (Kip)
T=10 in.	0.5	28'-0"	6	3¼	14	31
	0.6	27'-0"	4	5	10	44
T=12 in.	0.5	31'-0"	7	2⅞	16	31
	0.6	30'-0"	5	4	12	44

BAR BENDING DIAGRAMS

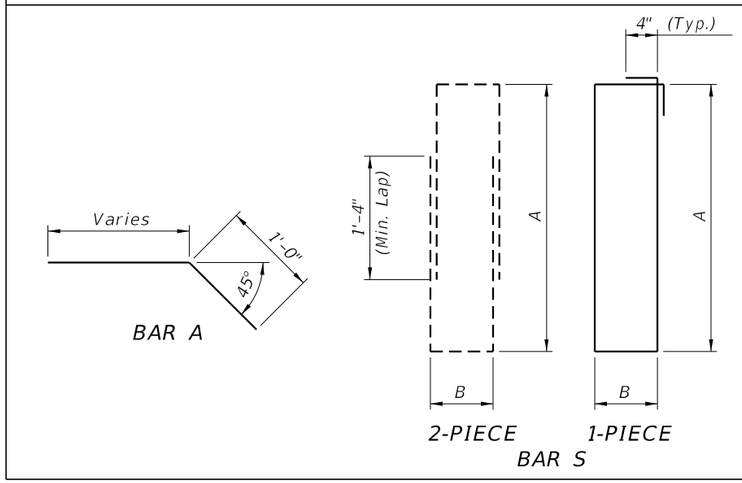

DIMENSION A	
S1	1'-11¾"
S2	1'-9½"
S3	2'-2"
S4	1'-6¾"
S5	1'-10¾"
S6	11"
S7	1'-7¼"

DIMENSION B	
T=10 in.	4"
T=12 in.	6"

NOTES:
1. Intermediate Prestress Strands not shown in Elevations and Sections.
2. All bar dimensions are out-to-out.
3. Bars A are #5 and Bars S are #4.
4. At the Contractor's option Bars S may be fabricated as a two piece bar as shown in the Bar Bending Diagram.
5. The Contractor may use Deformed Welded Wire Reinforcement meeting the requirements of Specification Section 931 in lieu of Bars A and Bars S if the wire size and spacing provide the same area of reinforcing steel per foot as the Bars shown.
6. For Dimensions L and X see Sheet Pile Data Table in Structures Plans.

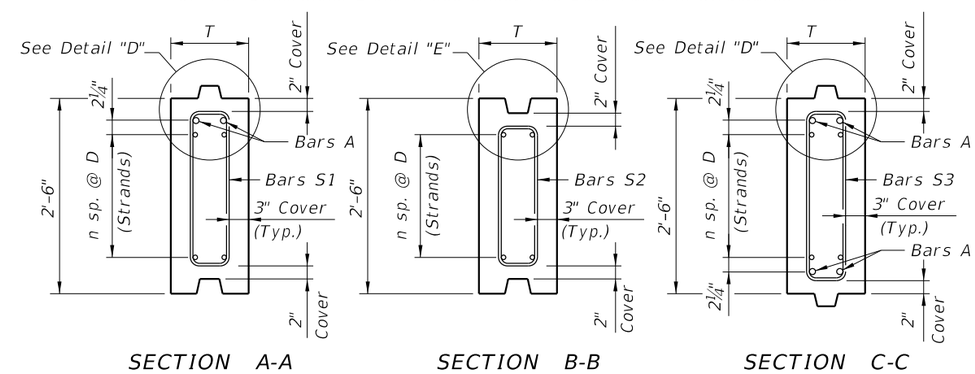

SECTION A-A SECTION B-B SECTION C-C

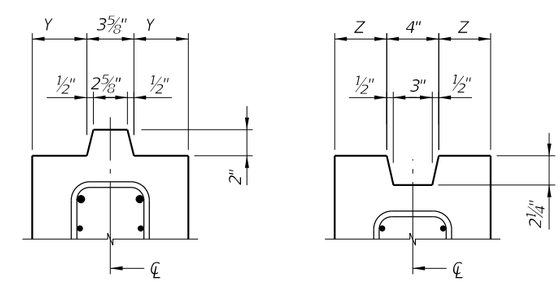

DETAIL "D" (Typical Tongue)

DETAIL "E" (Typical Groove)

TYPE "A" STANDARD SECTION

9/21/2021 1:48:19 PM

LAST REVISION	REVISION	DESCRIPTION:			INDEX	SHEET
11/01/18			FY 2022-23 STANDARD PLANS	PRECAST CONCRETE SHEET PILE WALL (CONVENTIONAL)	455-400	2 of 4

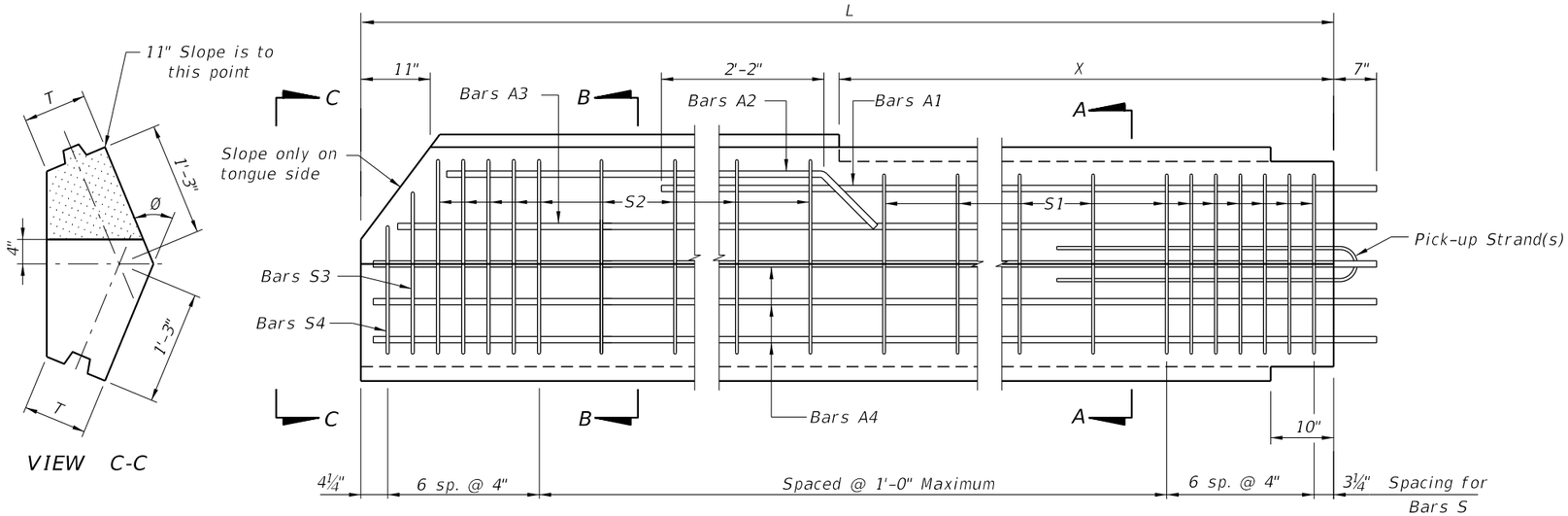

ELEVATION
(TYPE "B1" PILE SHOWN, TYPE "B2" PILE OPPOSITE HAND)

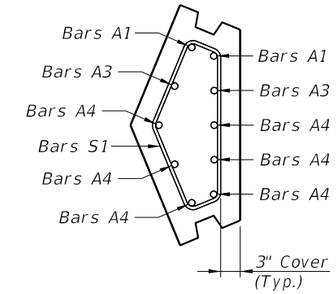

SECTION A-A

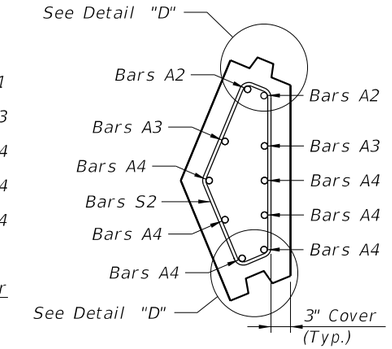

SECTION B-B

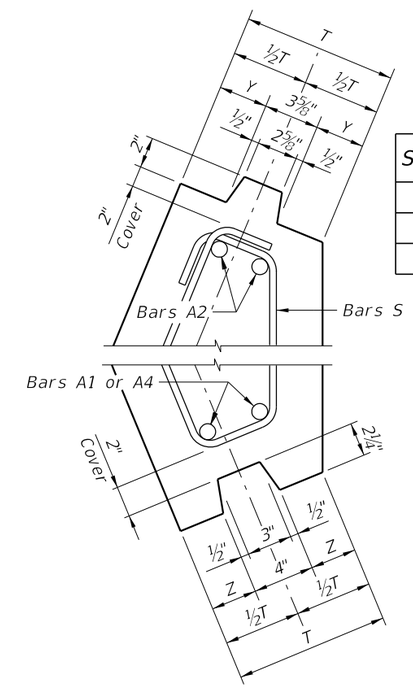

SHEET PILE DIMENSIONS		
T (in.)	10	12
Y (in.)	3 3/16	4 3/16
Z (in.)	3	4

DETAIL "D"
(TYPE "B1" PILE SHOWN, TYPE "B2" PILE OPPOSITE HAND)

BAR BENDING DIAGRAMS

STIRRUP DIMENSIONS (T = 10")

Ø	BAR MARK	R1	R2	R3	R4	R5	R6	R7	R8
30°	S1	11¼"	9¾"	1'-6½"	2½"	5"	4¾"	5½"	4¼"
	S2	1'-1½"	9¾"	1'-8¾"	2½"	4½"	5½"	5¾"	4¼"
	S3	11¼"	8"	1'-6"	1¼"	5"	4½"	4½"	5"
	S4	11¼"	4¼"	1'-1¾"	1¾"	5"	3¾"	2½"	6¼"
45°	S1	11½"	8"	1'-4"	4"	5½"	6½"	8"	4"
	S2	1'-1¾"	8"	1'-5¾"	4"	4½"	7½"	8"	4"
	S3	11½"	6¾"	1'-4"	2¼"	5½"	6¾"	6¾"	5½"
	S4	11½"	3½"	1'-0"	3"	5½"	5"	3½"	7"
60°	S1	1'-0"	6"	1'-0¾"	5¼"	6"	7¼"	10¼"	3"
	S2	1'-2"	6"	1'-2¾"	5¼"	4¾"	8¾"	10½"	3"
	S3	1'-0"	4¾"	1'-1½"	3¼"	6"	8"	8¾"	5¼"
	S4	1'-0"	2½"	10"	4½"	6"	5¾"	4"	7½"

STIRRUP DIMENSIONS (T = 12")

Ø	BAR MARK	R1	R2	R3	R4	R5	R6	R7	R8
30°	S1	11½"	10"	1'-6"	3½"	7"	4¾"	5¾"	6"
	S2	1'-1¾"	10"	1'-8¼"	3½"	6½"	5¼"	5¾"	6"
	S3	11½"	8¼"	1'-5¾"	2"	7"	4¾"	4½"	7¼"
	S4	11½"	4"	1'-1¼"	2¼"	7"	3¾"	2½"	8¼"
45°	S1	1'-0"	8½"	1'-3¼"	5¼"	7½"	6¼"	8½"	5¼"
	S2	1'-2¼"	8½"	1'-5½"	5¼"	6½"	7¼"	8½"	5¼"
	S3	1'-0"	7"	1'-4"	3"	7½"	6¾"	7"	7¼"
	S4	1'-0"	3½"	11¾"	3¾"	7½"	5"	3½"	9"
60°	S1	1'-0½"	6¼"	11¾"	7"	8"	6¾"	10¾"	4"
	S2	1'-2¾"	6¼"	1'-2"	7"	6¾"	8"	10¾"	4"
	S3	1'-0½"	5"	1'-1½"	4"	8"	8"	9"	7"
	S4	1'-0½"	2½"	9½"	5½"	8"	5½"	4¼"	9¼"

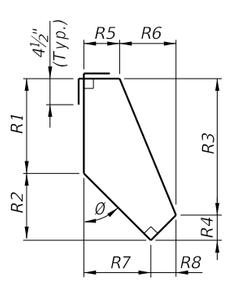

1 - PIECE

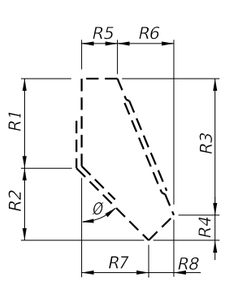

2 - PIECE

BARS S1 & S2

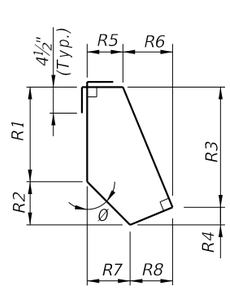

BARS S3 & S4

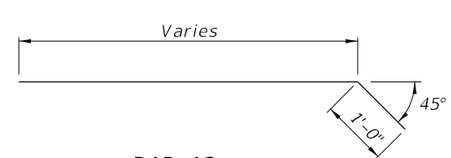

BAR A2

NOTES:
1. This drawing includes details for precast concrete corner piles for 10" and 12" thick sheet pile systems. The details apply equally to both thicknesses.
2. The bar configurations shown in Sections A-A and B-B shall be used for Ø angles between 15° and 75°. For Ø angles not shown, the reinforcing bar dimensions may be interpolated or extrapolated from the stirrup dimensions shown.
3. All bar dimensions are out-to-out.
4. Bars A are #8 and Bars S are #4.
5. Values for Stirrup Dimensions are shown for Ø equal to 30°, 45° & 60° only.
6. At the Contractor's option Bars S may be fabricated as a 2 piece bar with a minimum lap length of 1'-4", as shown in Bar Bending Diagrams.
7. If Type "B1" or "B2" pile is used as a Starter Pile show tongue on both sides of pile from Dim. X down. Show dimensions for Bars S2, S3 & S4 in shop drawings.
8. If tongue must be on the opposite side from that shown all dimensions and Bars A, S2, S3 and S4 will be the same but opposite hand.
9. For Dimensions L, X and Angle Ø, see Sheet Pile Data Table in Structures Plans.

TYPE "B1" AND "B2" - VARIABLE ANGLE CORNER PILE

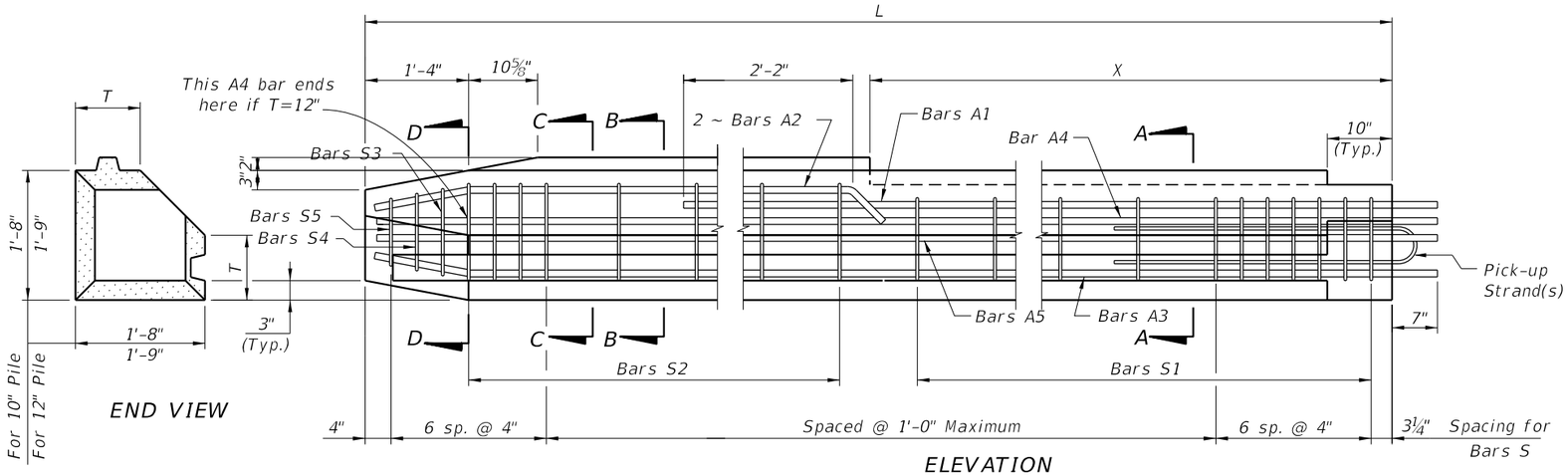

END VIEW

ELEVATION
(TYPE "C1" PILE SHOWN, TYPE "C2" PILE OPPOSITE HAND)

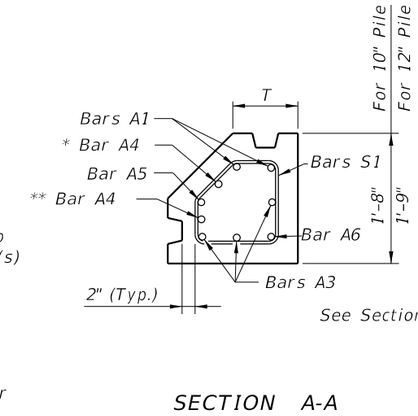

SECTION A-A

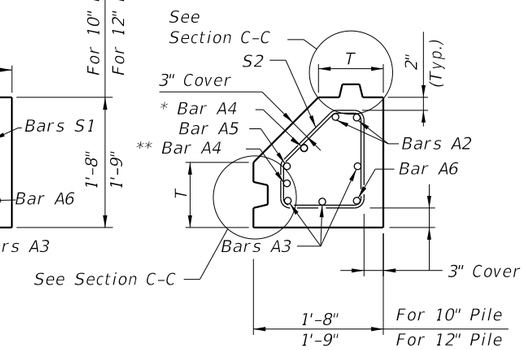

SECTION B-B

* This Bar A4 shall be 1'-2" shorter than other A4 bars for T = 12".

** This Bar A4 (not shown in elevation) is included only if T = 12".

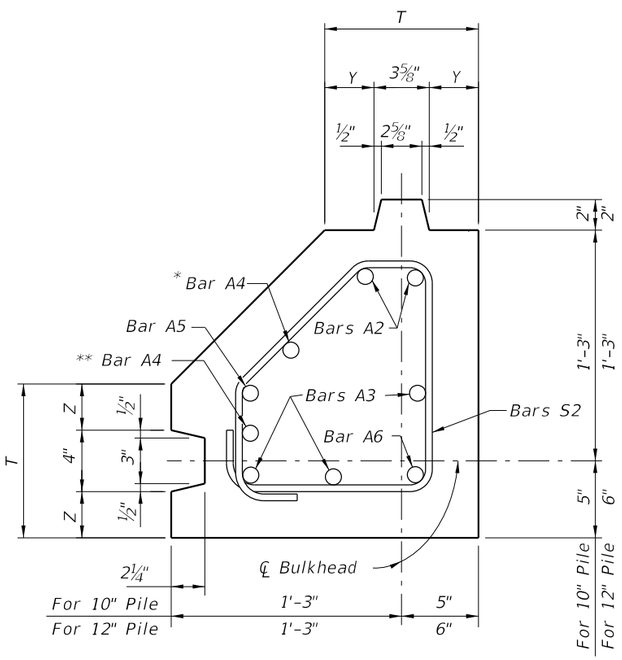

SECTION C-C (T=10" or 12")

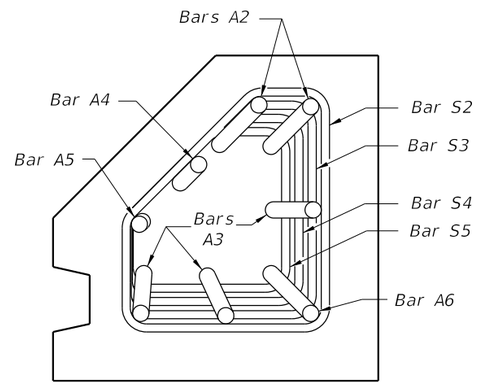

SECTION D-D (T=10")

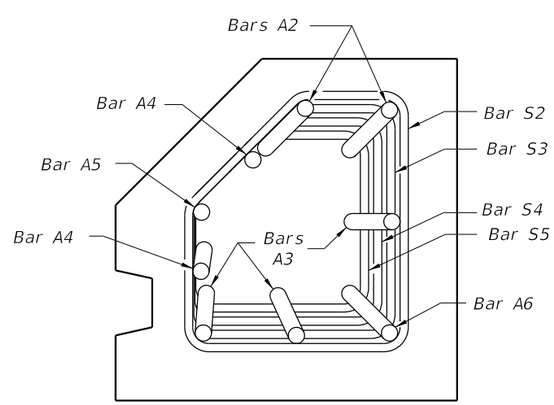

SECTION D-D (T=12")

STIRRUP DIMENSIONS					
θ	T (in.)	BAR MARK	R1	R2	R3
90°	10	S1	7"	5¾"	7"
		S2	7"	8"	4¾"
		S3	6¼"	7¼"	4¾"
		S4	5½"	6½"	4¾"
		S5	4¾"	5¾"	4¾"
	12	S1	9"	4¾"	9"
		S2	9"	7"	6¾"
		S3	8¼"	6¼"	6¾"
		S4	7½"	5½"	6¾"
		S5	6¾"	4¾"	6¾"

SHEET PILE DIMENSIONS		
T (in.)	10	12
Y (in.)	3 3/16	4 3/16
Z (in.)	3	4

BAR BENDING DIAGRAMS

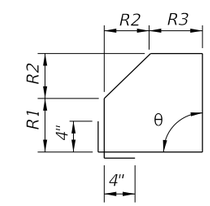

STIRRUPS S

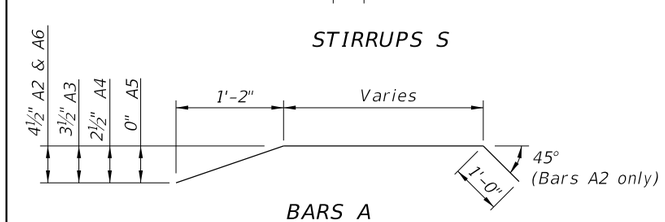

BARS A

Note: All Bar dimensions are out-to-out.

NOTES:
1. All bar dimensions are out-to-out.
2. Bars A are #8 and Bars S are #4.
3. This drawing includes information for precast Corner Piles for 10" and 12" thick Sheet Pile systems. The details apply to both thicknesses but the bar configurations change slightly according to the thickness values used.
4. If Type "C1" or "C2" pile is used as a Starter Pile show tongue on both sides of pile from Dim. X down. Show dimensions for Bars S2, S3, S4 & S5 in shop drawings.
5. If tongue must be on opposite side (Groove Side) from that shown, all dimensions and reinforcement shall follow the corresponding Tongue or Groove side.
6. For Dimensions L and X see Sheet Pile Data Table in Structures Plans.

TYPE "C1" AND "C2" - RIGHT ANGLE CORNER PILE

CROSS REFERENCES:
For Dimensions L and X see Sheet Pile Wall Data Table in Structures Plans.

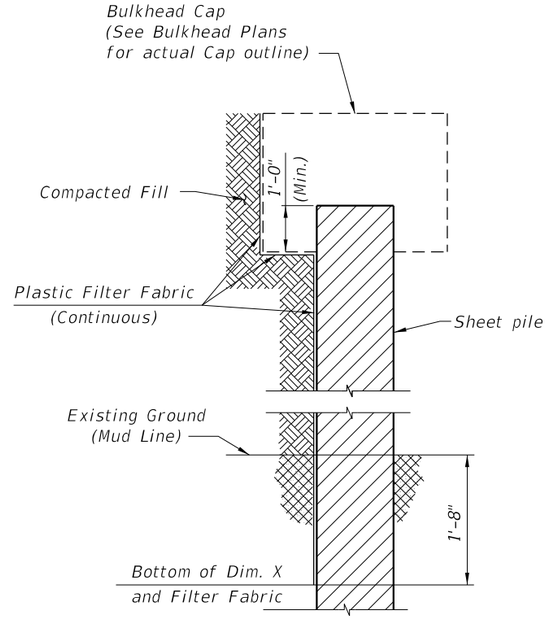

SECTION THRU BULKHEAD
(Showing Plastic Filter Fabric)

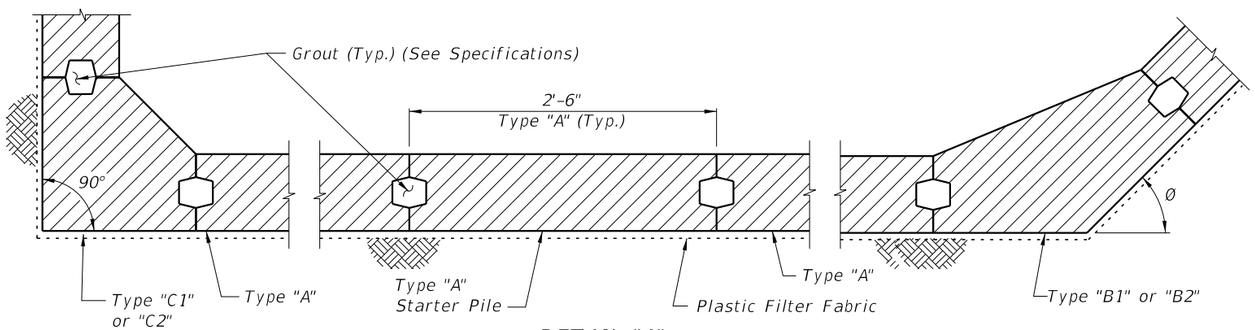

DETAIL "A"
(Cap and Anchoring System Not Shown)
(Section Taken Above Dimension X)

NOTE: Detail "A" shows a Part-Plan View of an assumed bulkhead.
See Bulkhead plans for actual Plan View.

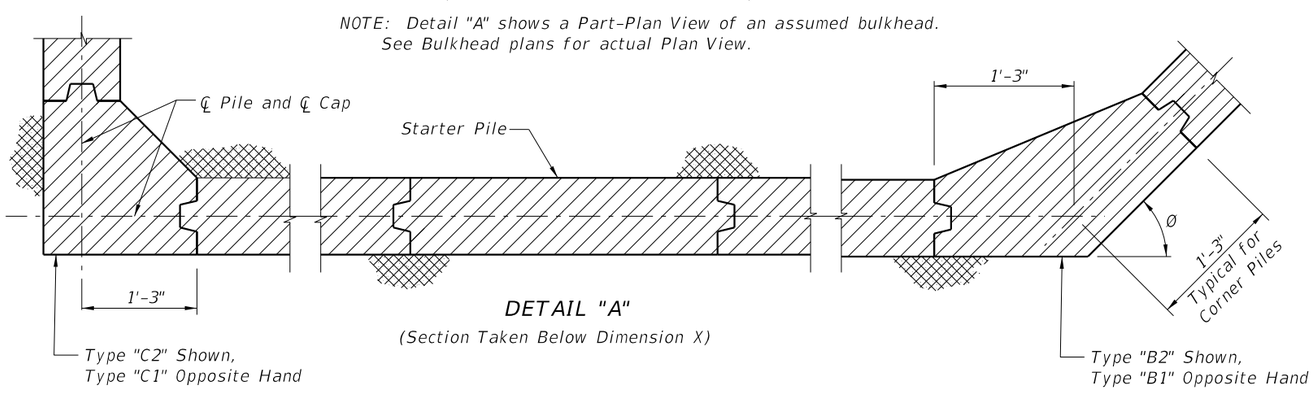

DETAIL "A"
(Section Taken Below Dimension X)

SHEET PILE DESIGN CRITERIA AND NOTES

DESCRIPTION:
This Index includes details for six types of piles with two thicknesses.
Type "A" is prestressed concrete construction with CFRP or HSSS strands.
Types "B1", "B2", "C1" and "C2" piles (corner piles) are reinforced concrete construction.
Manufacture, cure and install Sheet Piles in accordance with the requirements of the contract documents.

MATERIALS: (for materials not listed refer to the Specifications)
CONCRETE
Class: V (Special)
Unit weight: 145 pcf
Modulus of Elasticity: Based on the use of Florida limerock aggregate concrete

REINFORCING BARS
Glass Fiber Reinforced Polymer (GFRP) bars meeting the requirements of Specification Section 932.

PRESTRESSING STRAND
Stainless Steel: Prestressing steel shall be seven-wire HSSS, Grade 240 strand, meeting the requirements of Specification Section 933.
Carbon FRP: Prestressing strand shall be CFRP strand, meeting the requirements of Specification Section 933.

DESIGN PARAMETERS:
Type "A"
Concrete Compressive Strength at release of prestressing: 4000 psi minimum
Uniform compression after prestressing losses: 700 psi minimum
Pick-up, Storage and Transportation: 450 psi tension with 1.5 times pile self weight for single-point pick-up at $f'c \geq 6000$ psi

Types "B1", "B2", "C1" & "C2"
Pick-up, Storage and Transportation: Minimum compressive strength $f'ci \geq 4000$ psi required for two-point pick-up; $f'c \geq 6000$ psi for single-point pick-up.

PLASTIC FILTER FABRIC:
The plastic filter fabric shall extend to the bottom of the "X" dimension.

PILE PICK-UP AND HANDLING:
Two-point pick-up for lifting out of forms & two-point support for storage & transportation.
Single-point pick-up for installation only.

PILE FIT-UP:
The 2'-6" Sheet Pile dimension is nominal. This dimension may be shortened by the Manufacturer up to ½" to allow for Sheet Pile fit-up in its final position. Minimum Sheet Pile width is 2'-5½". No changes shall be made to the tongues or grooves.

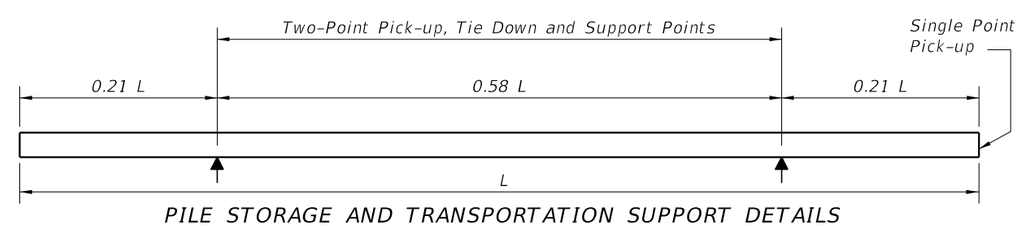

PILE STORAGE AND TRANSPORTATION SUPPORT DETAILS

NOTES AND DETAILS

LAST REVISION	REVISION	DESCRIPTION:			INDEX	SHEET
11/01/20			FY 2022-23 STANDARD PLANS	PRECAST CONCRETE SHEET PILE WALL (CFRP/GFRP & HSSS/GFRP)	455-440	1 of 4

9/21/2021 1:48:21 PM

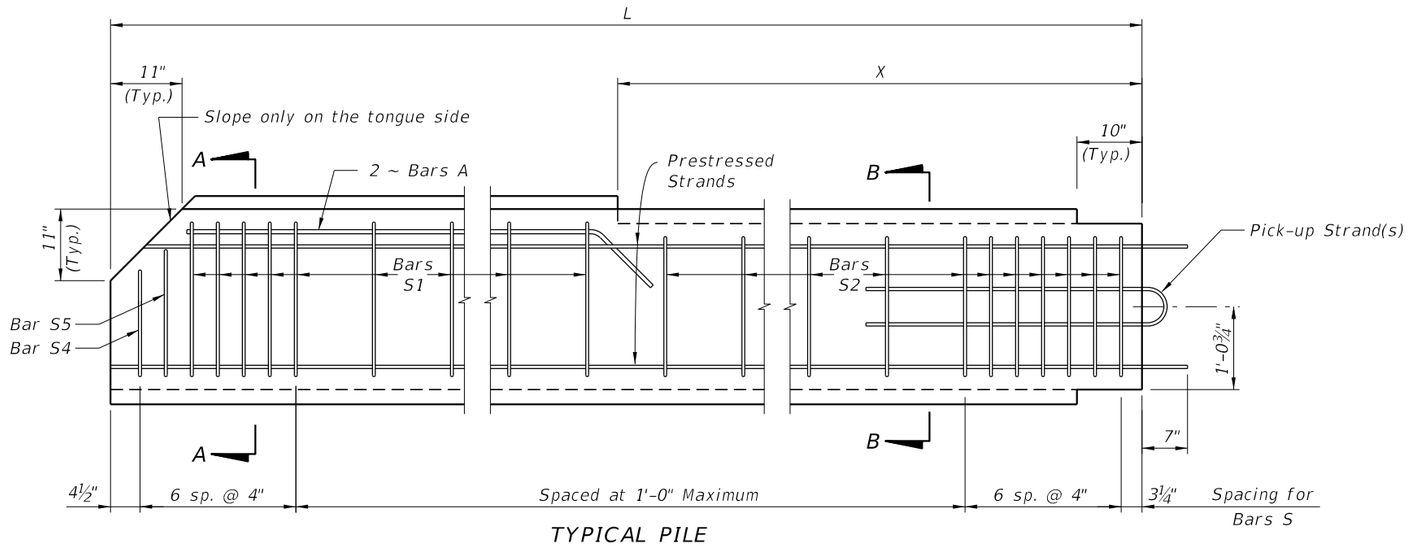

TYPICAL PILE

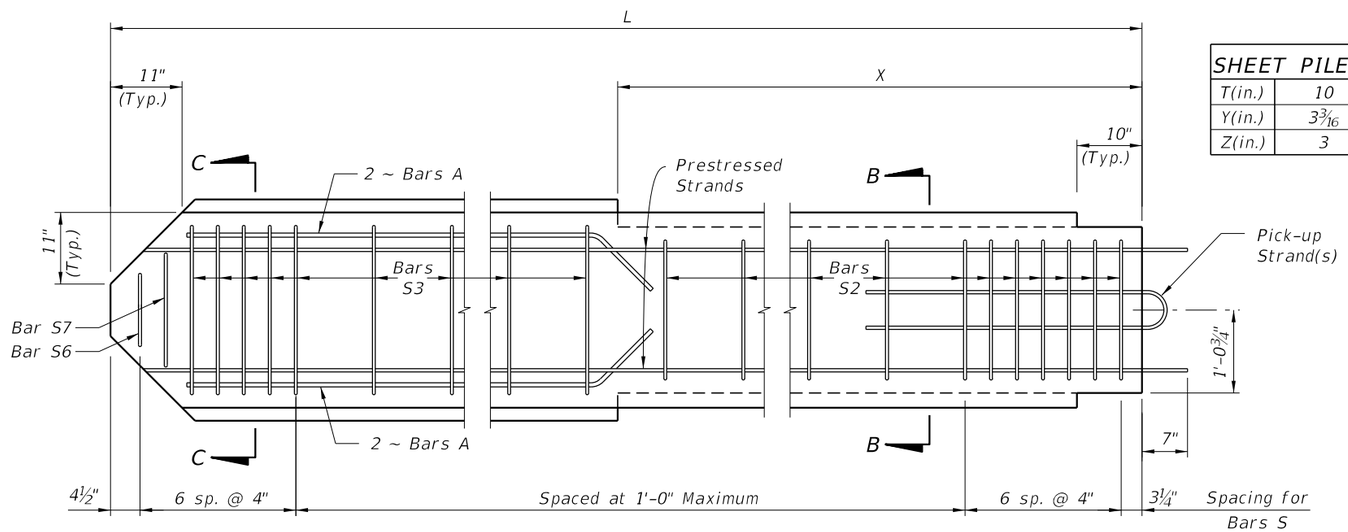

STARTER PILE

SHEET PILE DIMENSIONS		
T(in.)	10	12
Y(in.)	3 3/16	4 3/16
Z(in.)	3	4

BAR BENDING DIAGRAMS

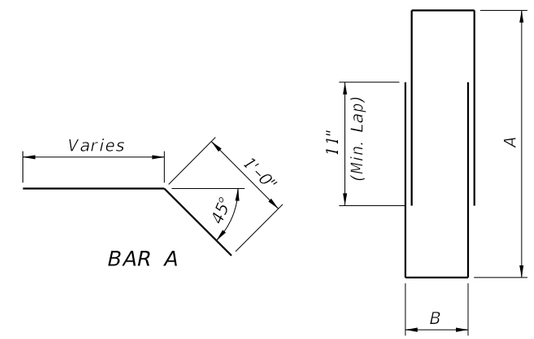

BAR S (2-PIECE)
(See Note 4)

DIMENSION A	
S1	1'-11¾"
S2	1'-9½"
S3	2'-2"
S4	1'-5¼"
S5	1'-9¼"
S6	1'-1"
S7	1'-9"

DIMENSION B	
T=10 in.	6"
T=12 in.	6"

NOTES:
1. Intermediate Prestress Strands not shown in Elevations and Sections.
2. All bar dimensions are out-to-out.
3. Bars A are GFRP #5
4. Bars S are GFRP #4 and may be a single closed bar (hoop) with equivalent area and tensile strength.
5. For 10" thick Sheet Piles, Bars S may be tilted to achieve contact with strands or provide supplemental GFRP Bars to offset Bars S from strands and maintain 2" Nominal cover.
6. For Dimensions L and X see Sheet Pile Data Table in Structures Plans.

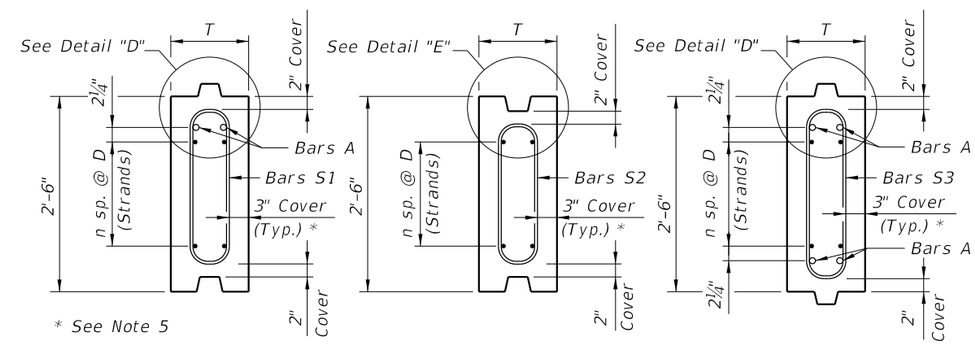

SECTION A-A SECTION B-B SECTION C-C

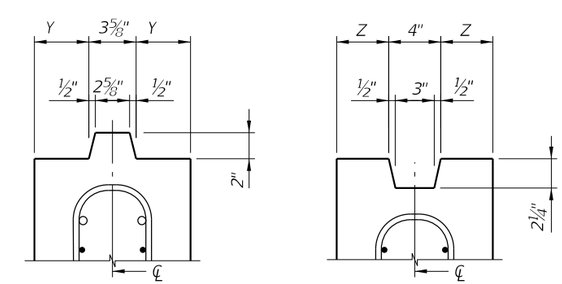

DETAIL "D" (Typical Tongue)

DETAIL "E" (Typical Groove)

TYPE "A" STANDARD SECTION

Strand Material	Wall Thickness	STRAND DIA. (in.)	MAXIMUM L *	n	D (in.)	TOTAL # OF STRANDS	Initial (Jacking) FORCE (Kip)
CFRP Strand	T=10 in.	0.49 (12.5mm)	26'-0"	4	4	10	28.7
		0.5 (12.7mm)	27'-0"	3	5¼ (2)	8	41.3
		0.6 (15.2mm)	27'-0"	3	5¼ (2)	8	42.7
	T=12 in.	0.49 (12.5mm)	31'-0"	5	3¼ (1)	12	28.7
		0.5 (12.7mm)	31'-0"	3	5¼ (2)	8	41.3
		0.6 (15.2mm)	31'-0"	3	5¼ (2)	8	42.7
HSSS Strand	T=10 in.	0.5 (12.7mm)	27'-0"	5	3¼ (1)	12	25.7
		0.6 (15.2mm)	26'-0"	3	5¼ (2)	8	36.5
	T=12 in.	0.5 (12.7mm)	32'-0"	6	2¾ (3)	14	25.7
		0.6 (15.2mm)	32'-0"	4	4	10	36.5

Alternate symmetrical strand patterns:
(1) 4 sp. @ 2" & 1 sp. @ 8"
(2) 2 sp. @ 4" & 1 sp. @ 8"
(3) 4 sp. @ 2" & 2 sp. @ 4"

* Based on lifting using single point pick-up.

9/21/2021 1:48:22 PM

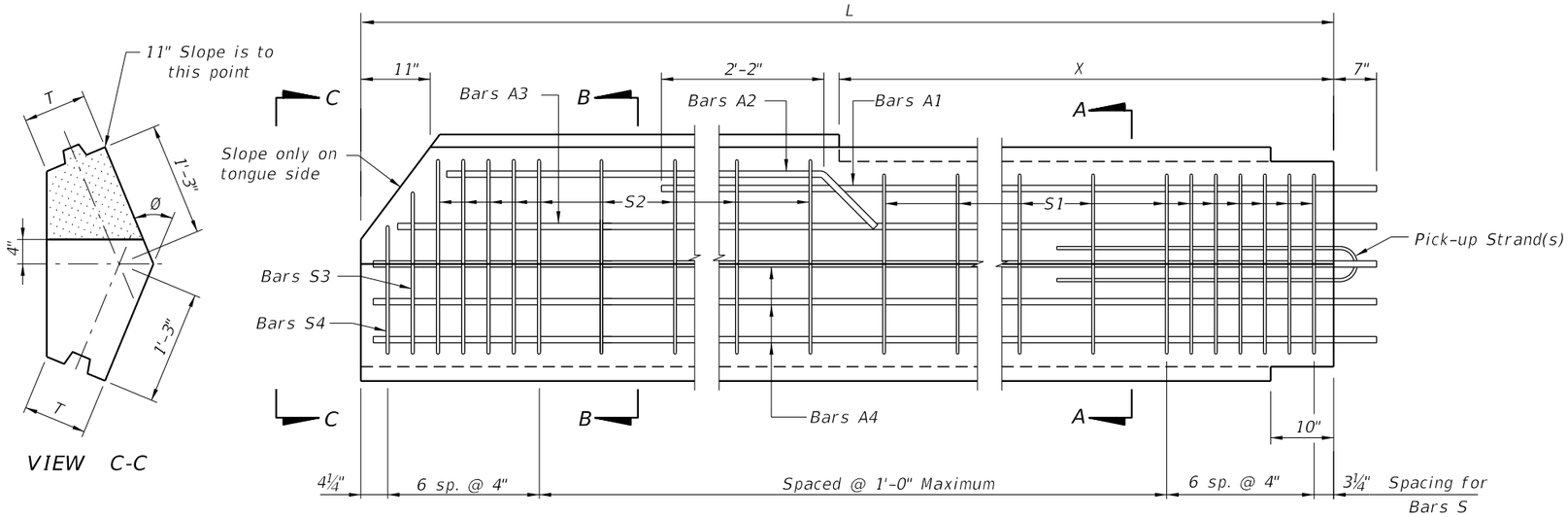

ELEVATION
(TYPE "B1" PILE SHOWN, TYPE "B2" PILE OPPOSITE HAND)

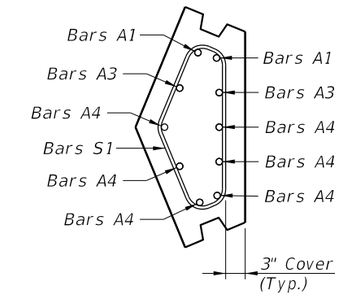

SECTION A-A

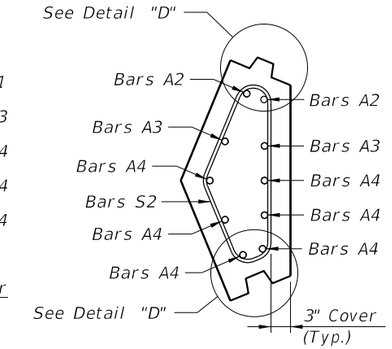

SECTION B-B

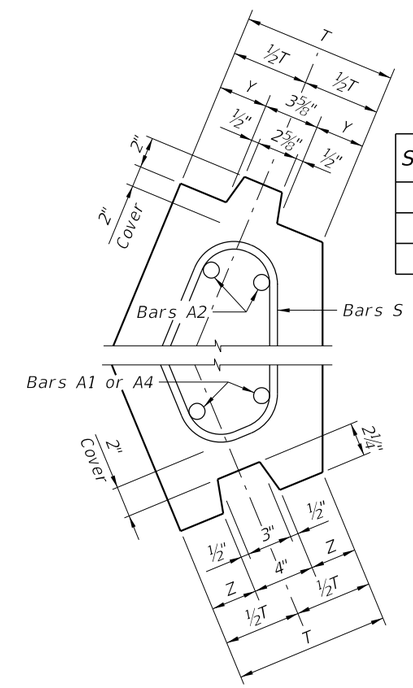

SHEET PILE DIMENSIONS		
T (in.)	10	12
Y (in.)	3 3/16	4 3/16
Z (in.)	3	4

DETAIL "D"
(TYPE "B1" PILE SHOWN, TYPE "B2" PILE OPPOSITE HAND)

BAR BENDING DIAGRAMS

STIRRUP DIMENSIONS (T = 10")

Ø	BAR MARK	R1	R2	R3	R4	R5	R6	R7	R8
30°	S1	11¼"	9¾"	1'-6½"	2½"	5"	4¾"	5½"	4¼"
	S2	1'-1½"	9¾"	1'-8¾"	2½"	4½"	5½"	5¾"	4¼"
	S3	11¼"	8"	1'-6"	1¼"	5"	4½"	4½"	5"
	S4	11¼"	4¼"	1'-1¾"	1¾"	5"	3¾"	2½"	6¼"
45°	S1	11½"	8"	1'-4"	4"	5½"	6½"	8"	4"
	S2	1'-1¾"	8"	1'-5¾"	4"	4½"	7½"	8"	4"
	S3	11½"	6¾"	1'-4"	2¼"	5½"	6¾"	6¾"	5½"
	S4	11½"	3½"	1'-0"	3"	5½"	5"	3½"	7"
60°	S1	1'-0"	6"	1'-0¾"	5¼"	6"	7¼"	10¼"	3"
	S2	1'-2"	6"	1'-2¾"	5¼"	4¾"	8¾"	10½"	3"
	S3	1'-0"	4¾"	1'-1½"	3¼"	6"	8"	8¾"	5¼"
	S4	1'-0"	2½"	10"	4½"	6"	5¾"	4"	7½"

STIRRUP DIMENSIONS (T = 12")

Ø	BAR MARK	R1	R2	R3	R4	R5	R6	R7	R8
30°	S1	11½"	10"	1'-6"	3½"	7"	4¾"	5¾"	6"
	S2	1'-1¾"	10"	1'-8¼"	3½"	6½"	5¼"	5¾"	6"
	S3	11½"	8¼"	1'-5¾"	2"	7"	4¾"	4½"	7¼"
	S4	11½"	4"	1'-1¼"	2¼"	7"	3¾"	2½"	8¼"
45°	S1	1'-0"	8½"	1'-3¼"	5¼"	7½"	6¼"	8½"	5¼"
	S2	1'-2¼"	8½"	1'-5½"	5¼"	6½"	7¼"	8½"	5¼"
	S3	1'-0"	7"	1'-4"	3"	7½"	6¾"	7"	7¼"
	S4	1'-0"	3½"	11¾"	3¾"	7½"	5"	3½"	9"
60°	S1	1'-0½"	6¼"	11¾"	7"	8"	6¾"	10¾"	4"
	S2	1'-2¾"	6¼"	1'-2"	7"	6¾"	8"	10¾"	4"
	S3	1'-0½"	5"	1'-1½"	4"	8"	8"	9"	7"
	S4	1'-0½"	2½"	9½"	5½"	8"	5½"	4¼"	9¼"

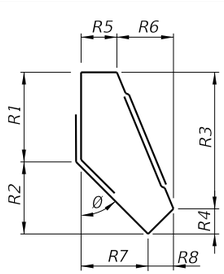

BARS S1 & S2
(2 - PIECE)

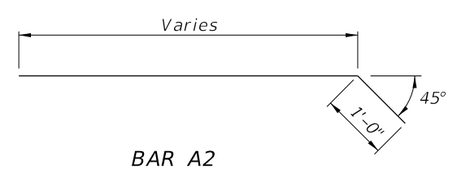

BAR A2

NOTES:
1. This drawing includes details for precast concrete corner piles for 10" and 12" thick sheet pile systems. The details apply equally to both thicknesses.
2. The bar configurations shown in Sections A-A and B-B shall be used for Ø angles between 15° and 75°. For Ø angles not shown, the reinforcing bar dimensions may be interpolated or extrapolated from the stirrup dimensions shown.
3. All bar dimensions are out-to-out.
4. Bars A are GFRP #8 and Bars S are GFRP #4.
5. Values for Stirrup Dimensions are shown for Ø equal to 30°, 45° & 60° only.
6. Bars S are fabricated as a 2 piece stirrup with a minimum lap length of 8", as shown in Bar Bending Diagrams, or a single closed bar (hoop) when approved by the Engineer.
7. If Type "B1" or "B2" pile is used as a Starter Pile show tongue on both sides of pile from Dim. X down. Show dimensions for Bars S2, S3 & S4 in shop drawings.
8. If tongue must be on the opposite side from that shown all dimensions and Bars A, S2, S3 and S4 will be the same but opposite hand.
9. For Dimensions L, X and Angle Ø, see Sheet Pile Data Table in Structures Plans.

TYPE "B1" AND "B2" - VARIABLE ANGLE CORNER PILE

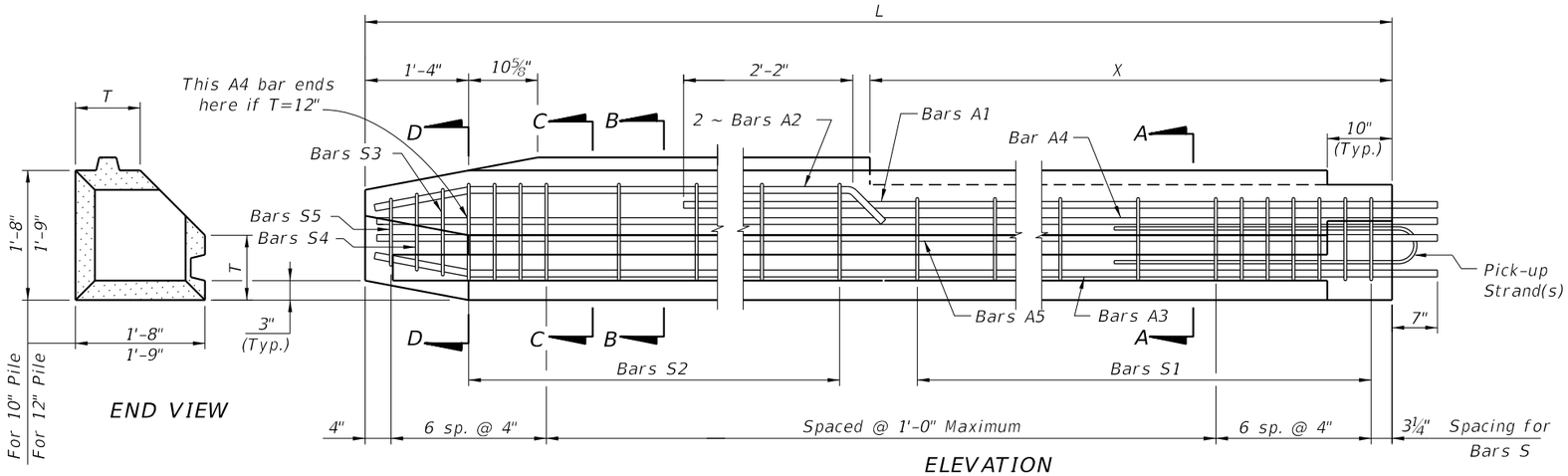

ELEVATION
(TYPE "C1" PILE SHOWN, TYPE "C2" PILE OPPOSITE HAND)

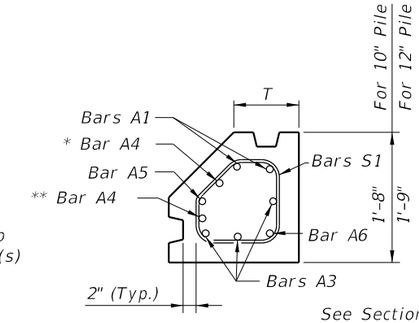

SECTION A-A

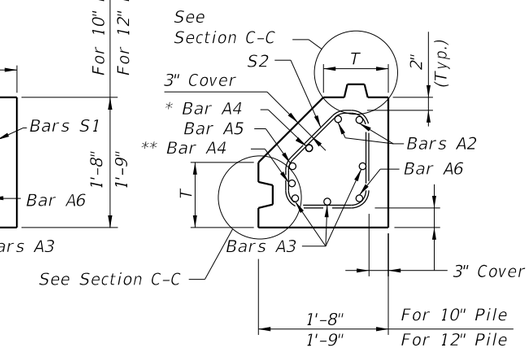

SECTION B-B

* This Bar A4 shall be 1'-2" shorter than other A4 bars for T = 12".

** This Bar A4 (not shown in elevation) is included only if T = 12".

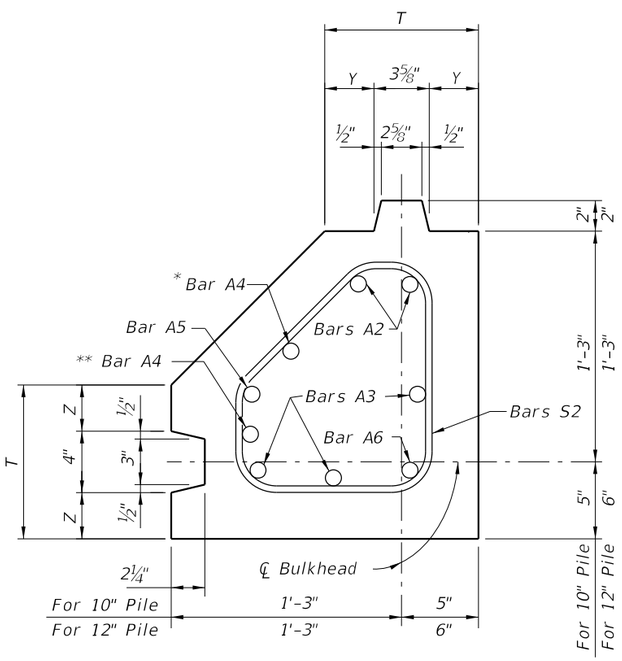

SECTION C-C (T=10" or 12")

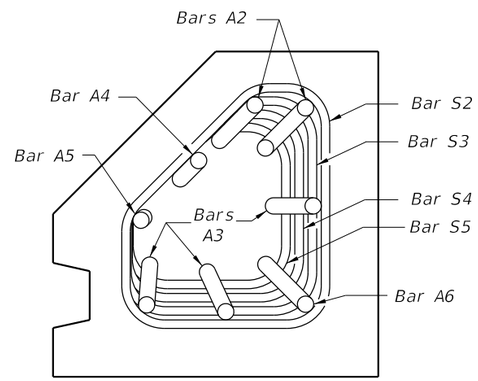

SECTION D-D (T=10")

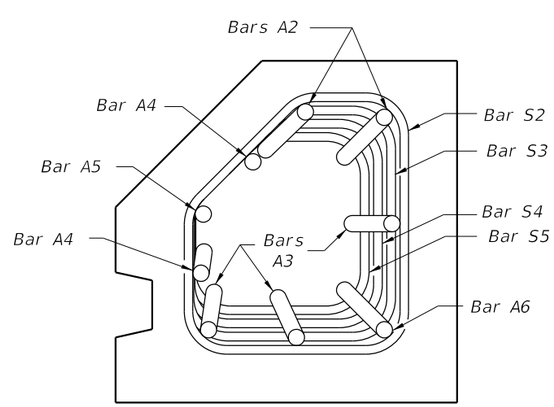

SECTION D-D (T=12")

STIRRUP DIMENSIONS					
θ	T (in.)	BAR MARK	R1	R2	R3
90°	10	S1	7"	5¾"	7"
		S2	7"	8"	4¾"
		S3	6¼"	7¼"	4¾"
		S4	5½"	6½"	4¾"
		S5	4¾"	5¾"	4¾"
	12	S1	9"	4¾"	9"
		S2	9"	7"	6¾"
		S3	8¼"	6¼"	6¾"
		S4	7½"	5½"	6¾"
		S5	6¾"	4¾"	6¾"

SHEET PILE DIMENSIONS		
T (in.)	10	12
Y (in.)	3 3/16	4 3/16
Z (in.)	3	4

BAR BENDING DIAGRAMS

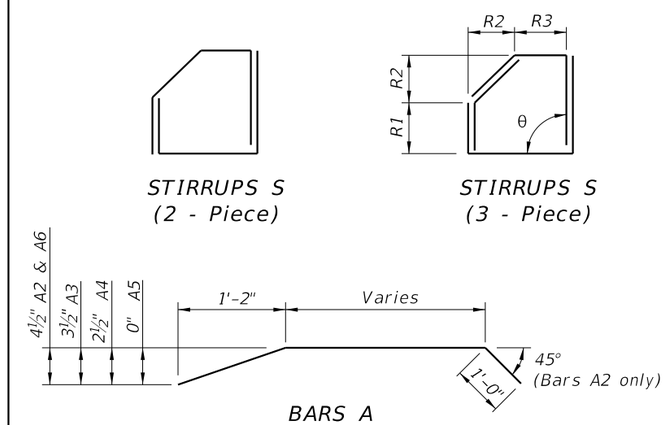

Note: All Bar dimensions are out-to-out.

NOTES:
1. All bar dimensions are out-to-out.
2. Bars A are GFRP #8 and Bars S are GFRP #4.
3. This drawing includes information for precast Corner Piles for 10" and 12" thick Sheet Pile systems. The details apply to both thicknesses but the bar configurations change slightly according to the thickness values used.
4. If Type "C1" or "C2" pile is used as a Starter Pile show tongue on both sides of pile from Dim. X down. Show dimensions for Bars S2, S3, S4 & S5 in shop drawings.
5. At the Contractor's option Bars S may be fabricated as a 2 piece or 3 piece bar with a minimum lap length of 8", as shown in Bar Bending Diagrams, or as a single closed bar (hoop) when approved by the Engineer.
6. If tongue must be on opposite side (Groove Side) from that shown, all dimensions and reinforcement shall follow the corresponding Tongue or Groove side.
7. For Dimensions L and X see Sheet Pile Data Table in Structures Plans.

TYPE "C1" AND "C2" - RIGHT ANGLE CORNER PILE