GENERAL NOTES:

1. Work these Index drawings with the Strain Pole Schedule in the Plans.

2. Shop Drawings: This Index is considered fully detailed and no shop drawings are necessary. Submit shop drawings for minor modifications not detailed in the plans.

3. Materials:
   - A. Concrete: Class V Special with 4 ksi minimum strength at transfer or Class VI with 6.5 ksi minimum strength at transfer
   - B. Prestress Strands & Spiral Reinforcing: Specification 641
   - C. Hand and coupler cover plates: Non-corrosive material
   - D. Screws: Round headed, chrome plated

4. Fabrication:
   - A. Pole Taper for pole width, strands, reinforcing and void: 0.081 in/ft per face.
   - B. Concrete Cover: 1" minimum
   - C. Spiral Reinforcing: As shown, plus one turn for splices and two turns at both the tip and butt ends of the pole.
   - D. The design dimensions for Front Face (FF) and Back Face (BF) of the poles may vary transversely from the section shown by ± ¼" to assist with removal from forms. Balance addition and subtraction of the face widths to maintain section areas shown.
   - E. Tie ground wires to the interior of reinforcing steel to prevent displacement during concreting operations.
   - F. Cut the tip end of the prestressed strand first or simultaneously with the butt end.
   - G. Provide cover plates and screws for hand hole and couplers. Attach cover plates to the poles using lead anchors or embedded threaded inserts.
   - H. Provide Aluminum Identification Tags on the poles with the following information:
     - a. Financial Project ID.
     - b. Pole Manufacturer
     - c. Standard Pole Type Number
     - d. Pole Length (L)

5. Support locations are for strand release, storage, lifting and transport. Keep BF oriented downward until final erection.

6. Pick-up and support locations shown may vary within a tolerance of ±3".

7. Two point attachment: provide an eye bolt hole for the messenger wire.

8. Tether Wire: When required, field-drill the eyebolt hole prior to installation

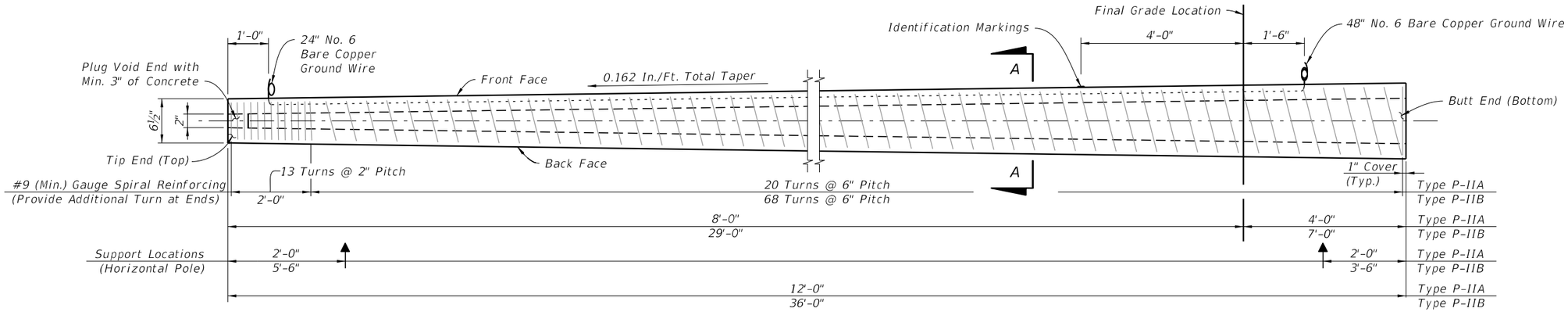

SERVICE POLE P-IIA (12 Ft.) & P-IIB (36 Ft.) ELEVATION
(Strands Not Shown)

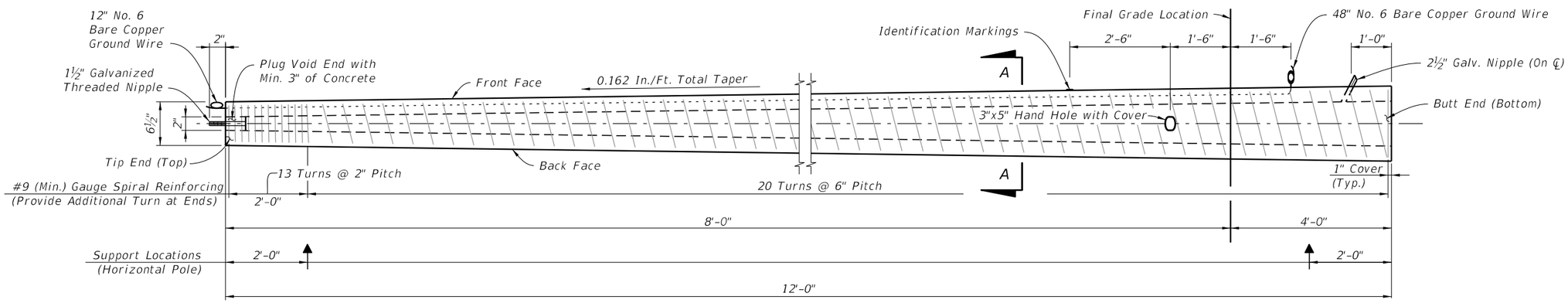

PEDESTAL POLE P-IIC (12 Ft.) ELEVATION
(Strands Not Shown)

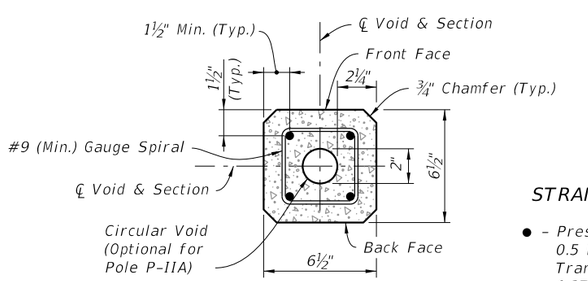

TIP END SECTION (TOP)

STRAND LEGEND

● - Prestressed Strand:
0.5 in. ~ 24 kips Before Transfer or
0.375 in. ~ 14 kips Before Transfer
(4 strands total)

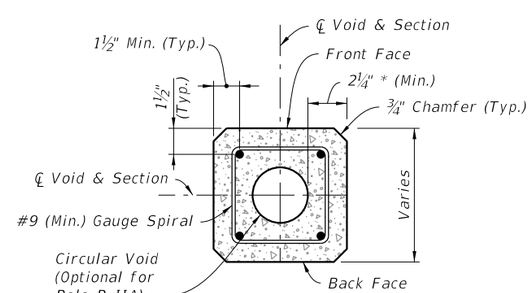

SECTION A-A
(Typical Square Section)

NOTES:

Strands shown are continuous from Tip End to Butt End.

Elevation view scale is exaggerated vertically for clarity.

For final erection, tilt pole upright with single point attachment located a distance of 4 Ft. (for P-IIA & P-IIC) or 10 Ft. (for P-IIB) from the Tip End.

* Dimension may vary from 2¼" to 3½" to accommodate smaller radius of optional stepped (PVC) void. The void diameter shall not be less than 2".

SERVICE AND PEDESTAL POLE TYPE P-II

LAST REVISION	REVISION	DESCRIPTION:			INDEX	SHEET
11/01/17			FY 2021-22 STANDARD PLANS	CONCRETE POLES	641-010	2 of 8

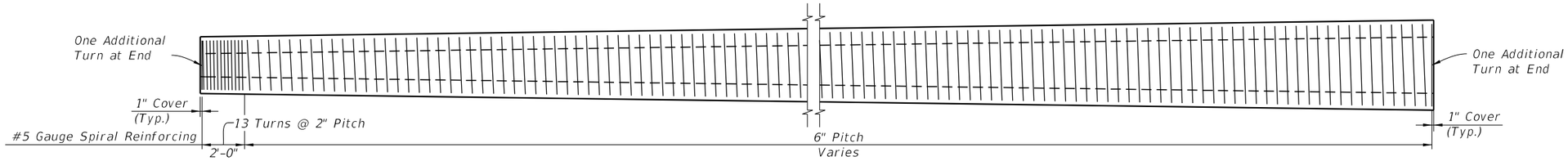

SPIRAL REINFORCING ELEVATION
(Strands, Holes, and Fixtures Not Shown)

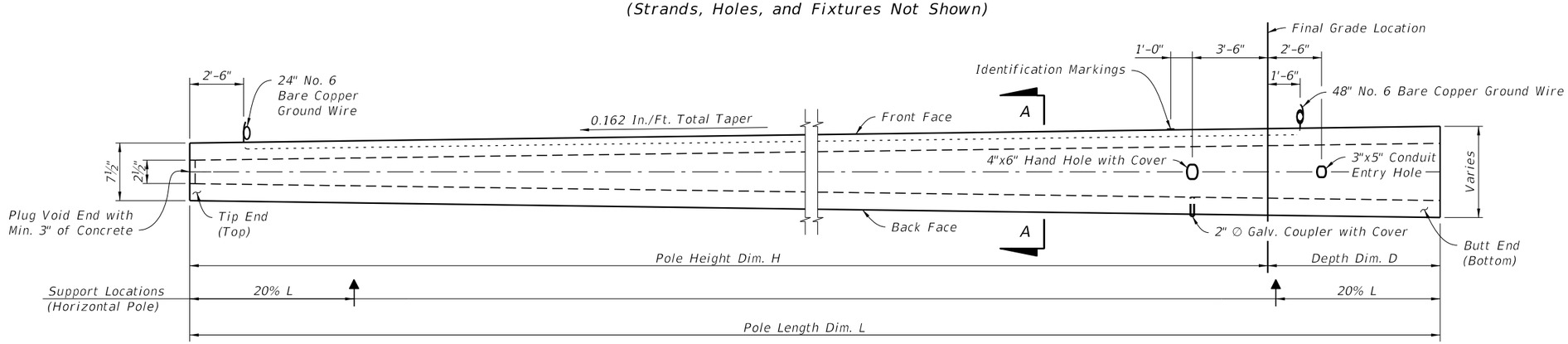

POLE ELEVATION
(Strands and Reinforcing Not Shown)

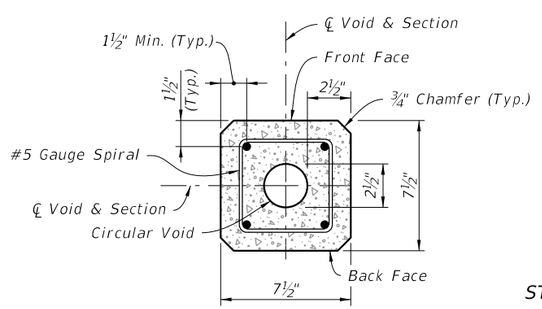

TIP END SECTION (TOP)

STRAND LEGEND

● - Prestressed Strand:
0.5 in. ~ 31 kips Before Transfer (4 strands total)

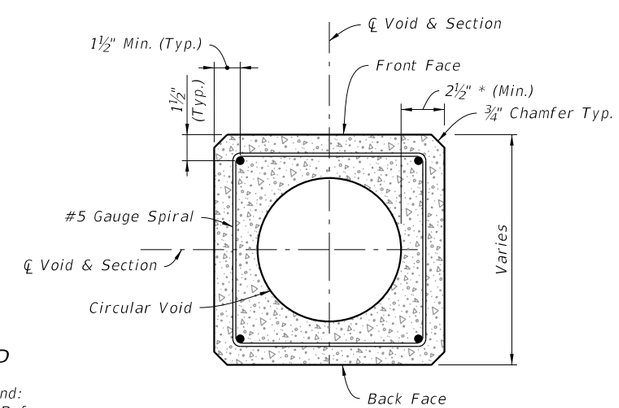

SECTION A-A
(Typical Square Section)

NOTES:

Strands shown are continuous from Tip End to Butt End.

Elevation view scale is exaggerated vertically for clarity.

For final erection, tilt pole upright with single point attachment located a distance 33.3% L from Tip End.

* Dimension may vary from 2½" to 3¾" to accommodate smaller radius of optional stepped (PVC) void. The void diameter shall not be less than 2½".

POLE TYPE P-III

LAST REVISION	REVISION	DESCRIPTION:				INDEX	SHEET
11/01/17			FDOT	FY 2021-22 STANDARD PLANS	CONCRETE POLES	641-010	3 of 8

10/12/2020 8:19:07 AM

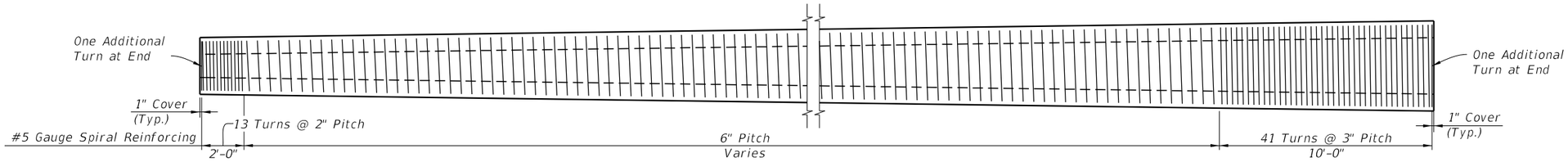

SPIRAL REINFORCING ELEVATION
(Strands, Holes, and Fixtures Not Shown)

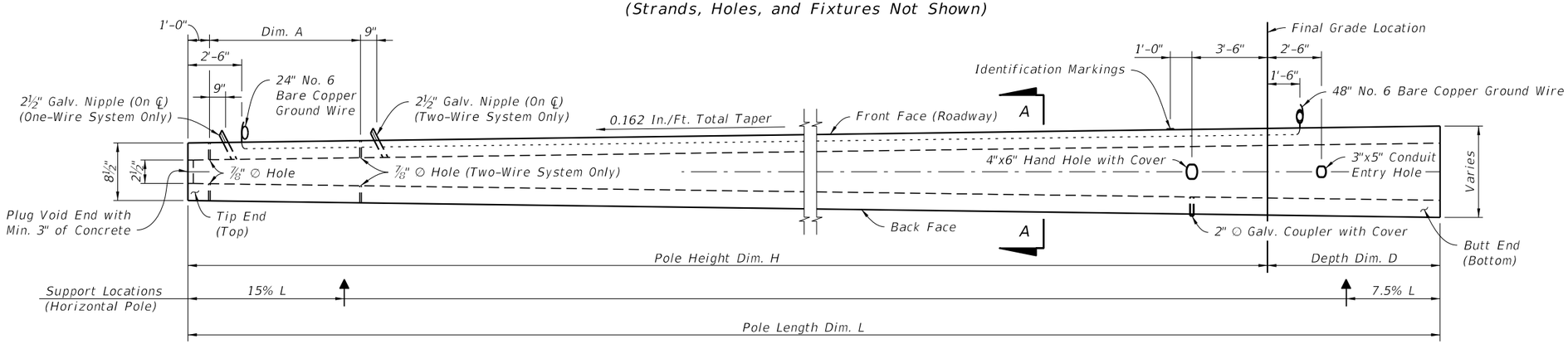

POLE ELEVATION
(Strands and Reinforcing Not Shown)

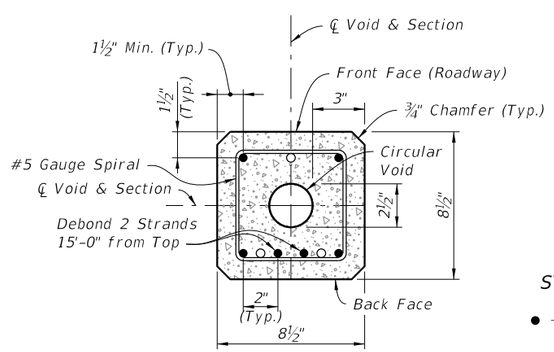

TIP END SECTION (TOP)
(For Dormant Strand Locations
See Section A-A)

STRAND LEGEND

● - Prestressed Strand
0.5 in. ~ 31 kips Before
Transfer (6 strands total)

○ - Dormant Strand
0.5 in. (3 strands total)
One 24" Splice Allowed
Per Strand

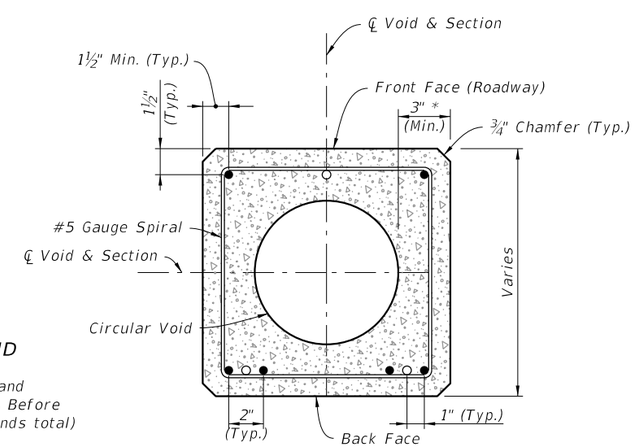

SECTION A-A
(Typical Square Section)

NOTES:

Strands shown are continuous from Tip End to Butt End.

Elevation view scale is exaggerated vertically for clarity.

For final erection, tilt pole upright with single point attachment located a distance 20% L from the Tip End.

* Dimension may vary from 3" to 4¼" to accommodate smaller radius of optional stepped (PVC) void. The void diameter shall not be less than 2½".

STRAIN POLE TYPE P-IV

LAST REVISION	REVISION	DESCRIPTION:			INDEX	SHEET
11/01/17			FY 2021-22 STANDARD PLANS	CONCRETE POLES	641-010	4 of 8

10/12/2020 8:19:09 AM

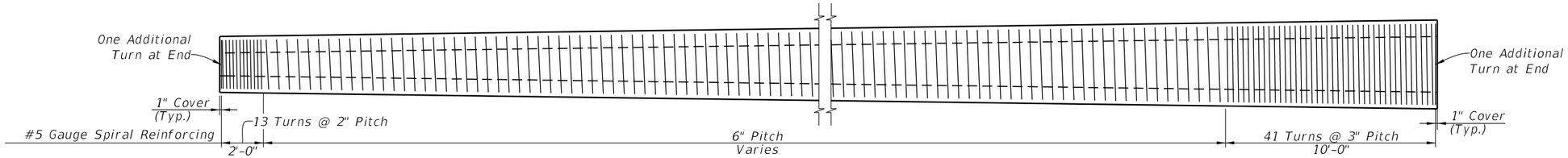

SPIRAL REINFORCING ELEVATION
(Strands, Holes, and Fixtures Not Shown)

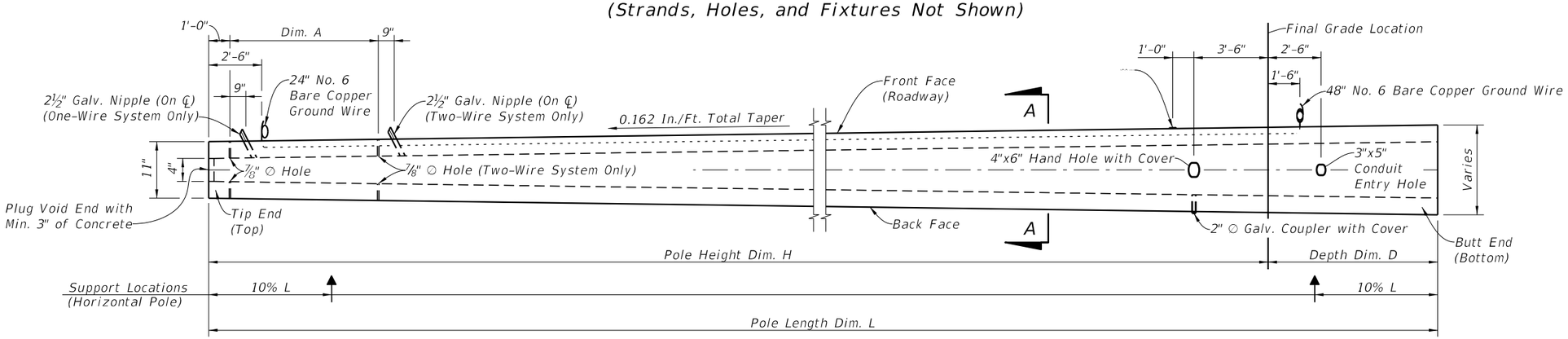

POLE ELEVATION
(Strands and Reinforcing Not Shown)

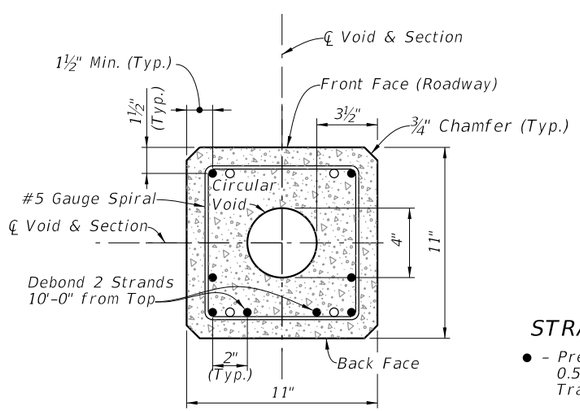

TIP END SECTION (TOP)
(For Dormant Strand Locations, See Section A-A)

STRAND LEGEND

● - Prestressed Strand 0.5 in. ~ 31 kips Before Transfer (8 strands total)

○ - Dormant Strand 0.5 in. (4 strands total) One 24" Splice Allowed Per Strand

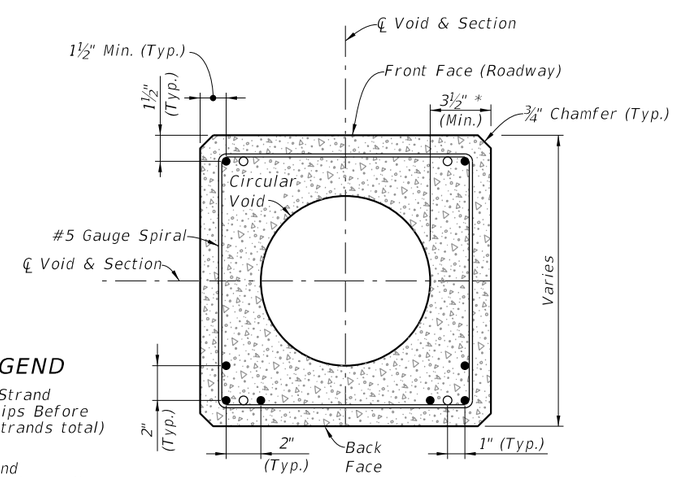

SECTION A-A
(Typical Square Section)

NOTES:

Strands shown are continuous from Tip End to Butt End.

Elevation view scale is exaggerated vertically for clarity.

For final erection, tilt pole upright with single point attachment located a distance 12.5% L from the Tip End.

* Dimension may vary from 3½" to 4¾" to accommodate smaller radius of optional stepped (PVC) void. The void diameter shall not be less than 4".

STRAIN POLE TYPE P-V

10/12/2020 8:19:11 AM

LAST REVISION	REVISION	DESCRIPTION:			INDEX	SHEET
11/01/17			FY 2021-22 STANDARD PLANS	CONCRETE POLES	641-010	5 of 8

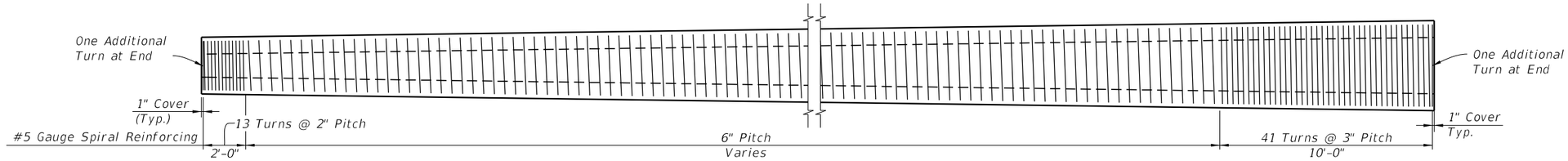

SPIRAL REINFORCING ELEVATION
(Strands, Holes, and Fixtures Not Shown)

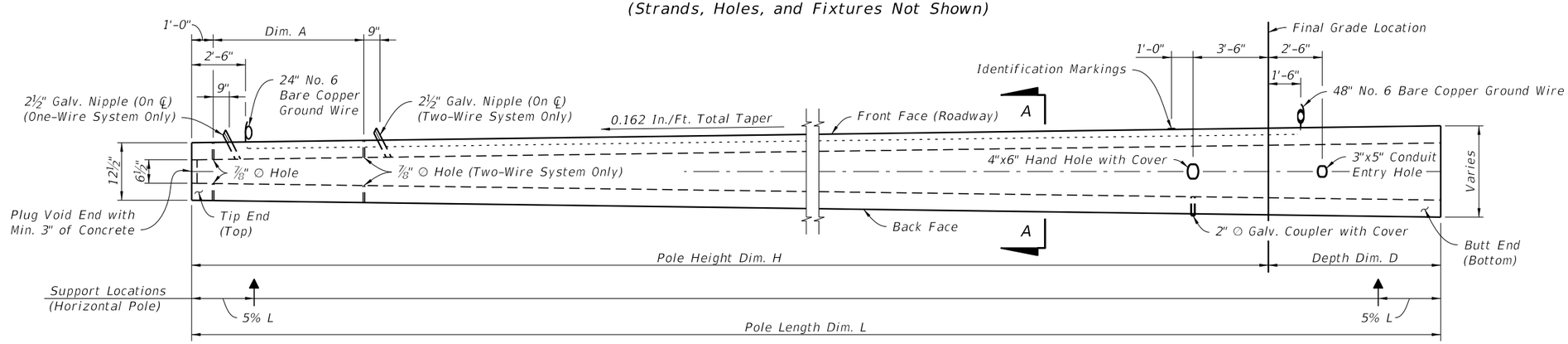

POLE ELEVATION
(Strands and Reinforcing Not Shown)

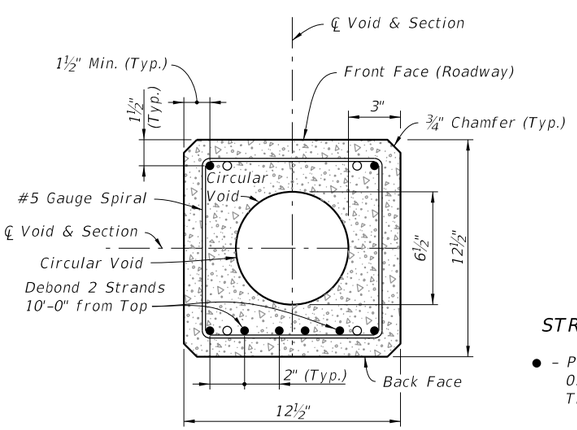

TIP END SECTION (TOP)
(For Dormant Strand Locations, See Section A-A)

STRAND LEGEND

● - Prestressed Strand 0.5 in. ~ 31 kips Before Transfer (8 strands total)

○ - Dormant Strand 0.5 in. (4 strands total) One 24" Splice Allowed Per Strand

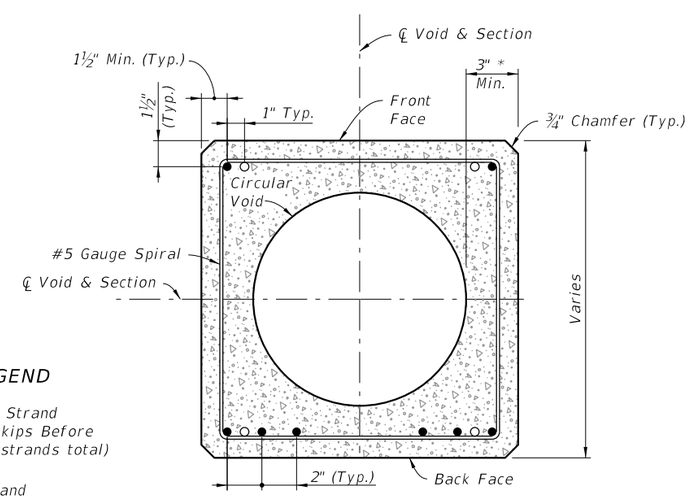

SECTION A-A
(Typical Square Section)

NOTES:

Strands shown are continuous from Tip End to Butt End.

Elevation view scale is exaggerated vertically for clarity.

For final erection, tilt pole upright with single point attachment located a distance 10% L from Tip End.

* Dimension may vary from 3" to 4¼" to accommodate smaller radius of optional stepped (PVC) void. The void diameter shall not be less than 6½".

STRAIN POLE TYPE P-VI

LAST REVISION	REVISION	DESCRIPTION:			INDEX	SHEET
11/01/17			FY 2021-22 STANDARD PLANS	CONCRETE POLES	641-010	6 of 8

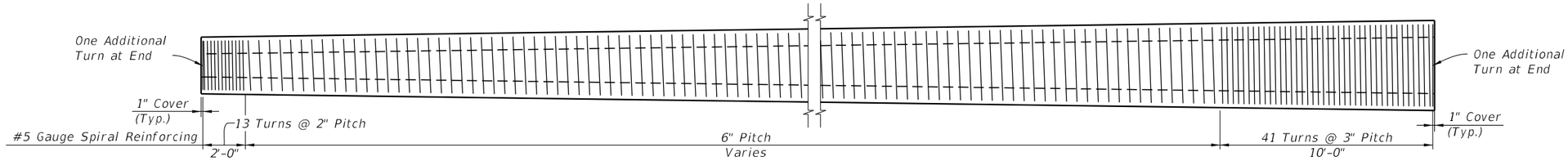

SPIRAL REINFORCING ELEVATION
(Strands, Holes, and Fixtures Not Shown)

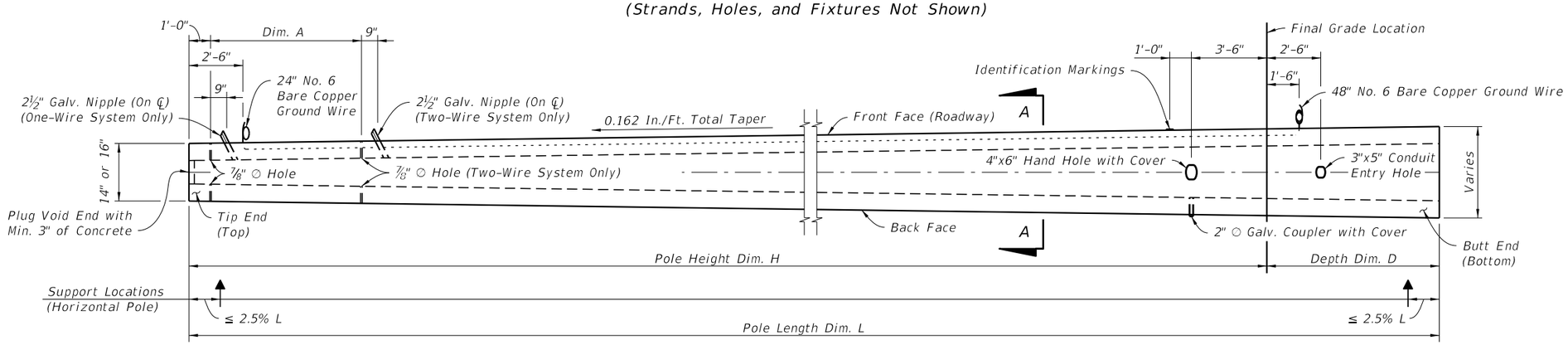

POLE ELEVATION
(Strands and Reinforcing Not Shown)

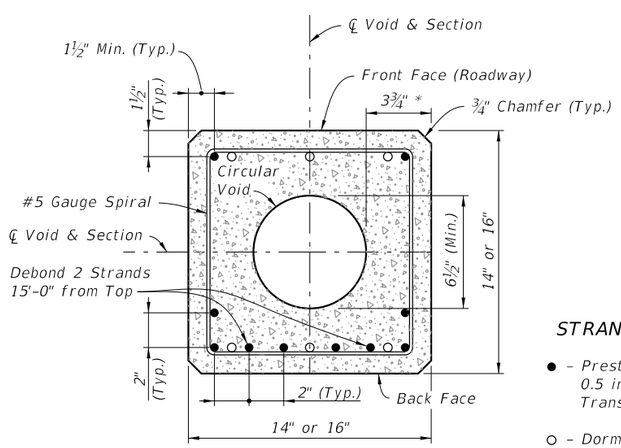

TIP END SECTION (TOP)
(For Dormant Strand Locations, See Section A-A)

STRAND LEGEND

● - Prestressed Strand
0.5 in. ~ 31 kips Before Transfer (10 strands total)

○ - Dormant Strand
0.5 in. (6 strands total)
One 24" Splice Allowed Per Strands

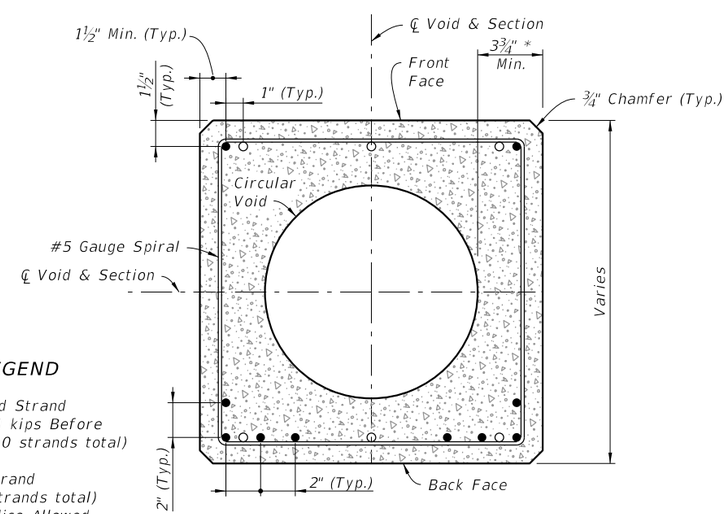

SECTION A-A
(Typical Square Section)

NOTES:

Strands shown are continuous from Tip End to Butt End.

Elevation view scale is exaggerated vertically for clarity.

For final erection, tilt pole upright with single point attachment located a distance 10% L from the Tip End.

* Dimension may vary from 3¾" to 5" to accommodate smaller radius of optional stepped (PVC) void. The void diameter shall not be less than 6½".

STRAIN POLE TYPE P-VII

LAST REVISION	REVISION	DESCRIPTION:	FDOT FY 2021-22 STANDARD PLANS	CONCRETE POLES	INDEX	SHEET
11/01/17					641-010	7 of 8

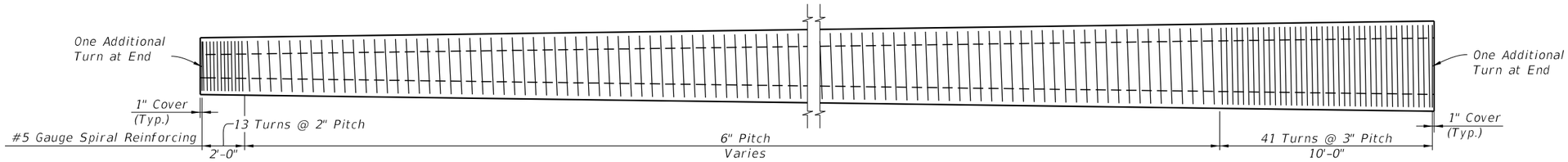

SPIRAL REINFORCING ELEVATION
(Strands, Holes, and Fixtures Not Shown)

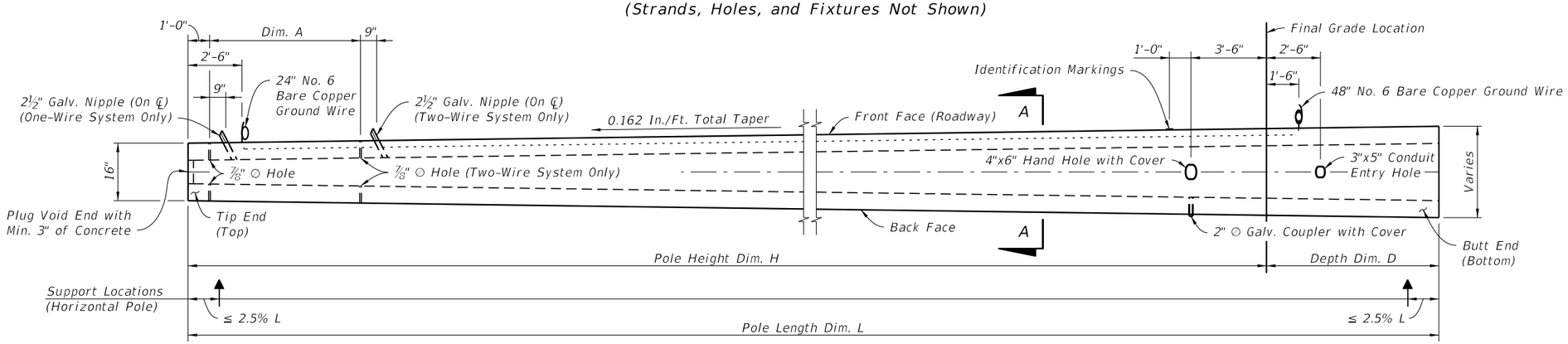

POLE ELEVATION
(Strands and Reinforcing Not Shown)

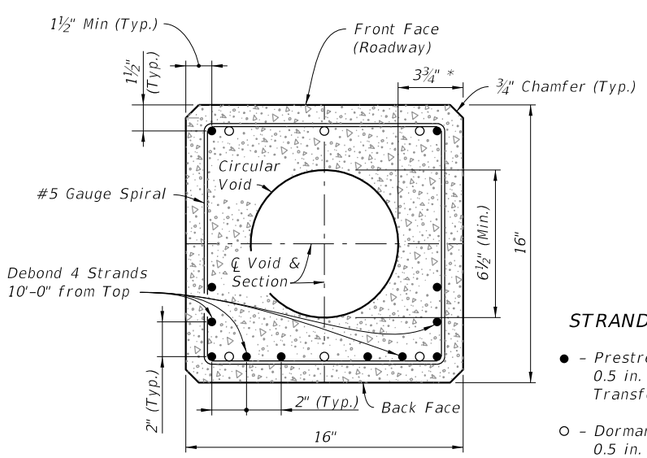

TIP END SECTION (TOP)
(For Dormant Strand Locations, See Section A-A)

STRAND LEGEND

● - Prestressed Strand 0.5 in. ~ 31 kips Before Transfer (12 strands total)

○ - Dormant Strand 0.5 in. (6 strands total) One 24" Splice Allowed Per Strand

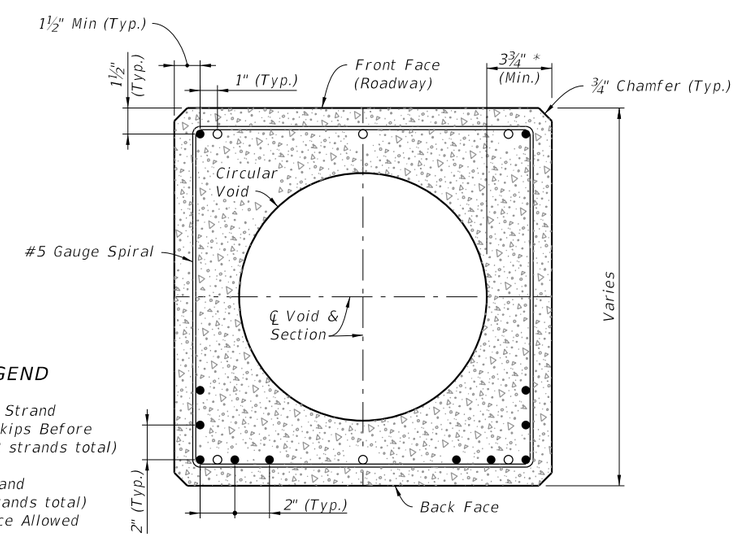

SECTION A-A
(Typical Square Section)

NOTES:

Strands shown are continuous from Tip End to Butt End.

Elevation view scale is exaggerated vertically for clarity.

For final erection, tilt pole upright with single point attachment located a distance 10% L from the Tip End.

* Dimension may vary from 3¾" to 5" to accommodate smaller radius of optional stepped (PVC) void. The void diameter shall not be less than 6½".

STRAIN POLE TYPE P-VIII

LAST REVISION	REVISION	DESCRIPTION:			INDEX	SHEET
11/01/17			FY 2021-22 STANDARD PLANS	CONCRETE POLES	641-010	8 of 8

10/12/2020 8:19:20 AM