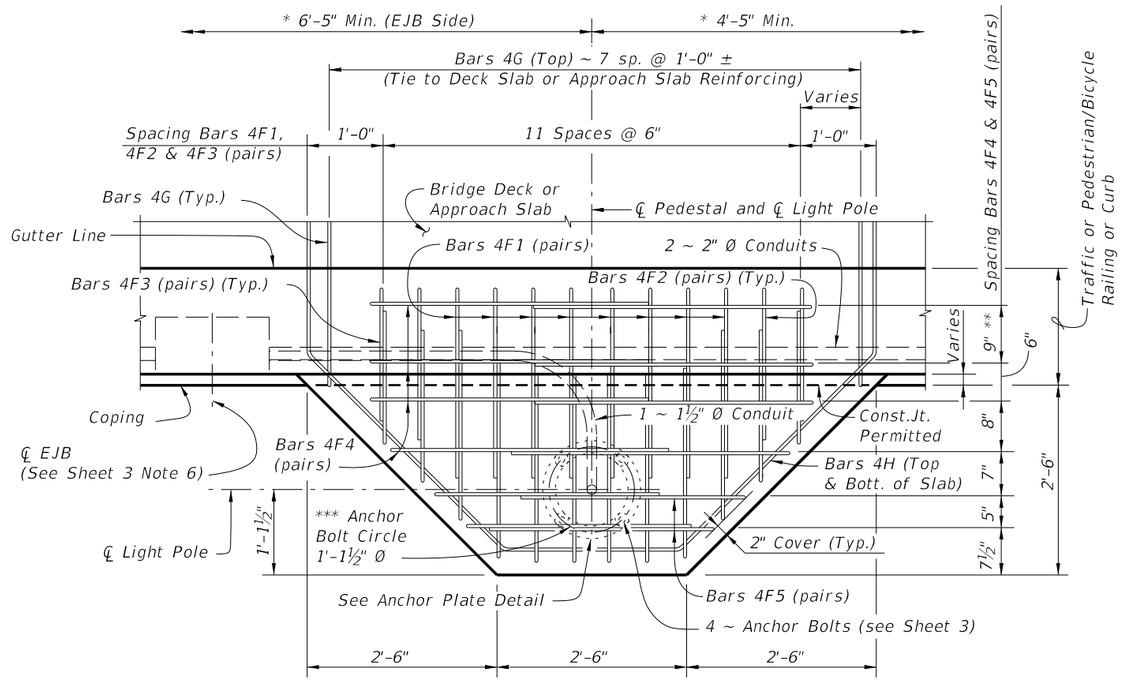

PLAN VIEW

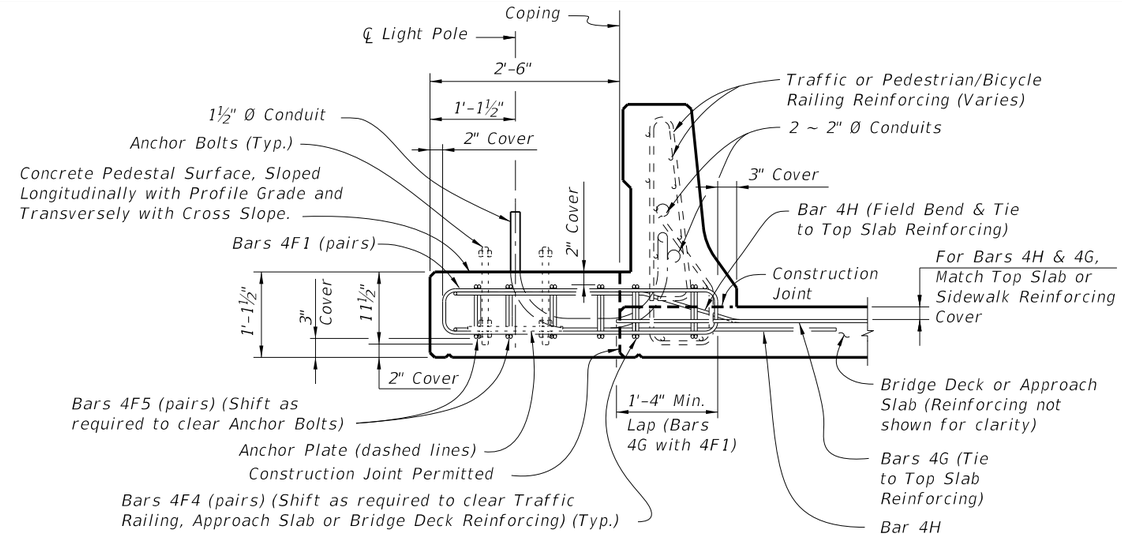

TYPICAL SECTION AT LIGHT POLE PEDESTAL FOR
APPROACH SLAB OR BRIDGE DECK THICKNESS LESS THAN 1'-1½" AT COPING

* Slip Forming Method of Construction requires the Engineer's approval within the limits shown.
** For Index No. 820 – Pedestrian/Bicycle Railing and concrete curb, this dimension is 3½". For raised sidewalks, this dimension is 1'-0" Max.
*** Anchor Bolt pattern orientation shall be as shown.

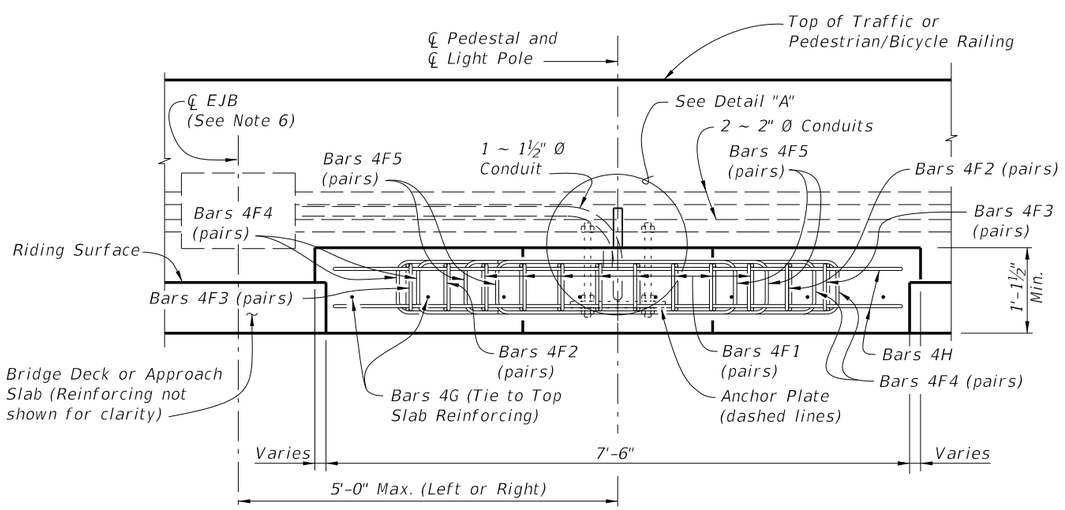

ELEVATION VIEW

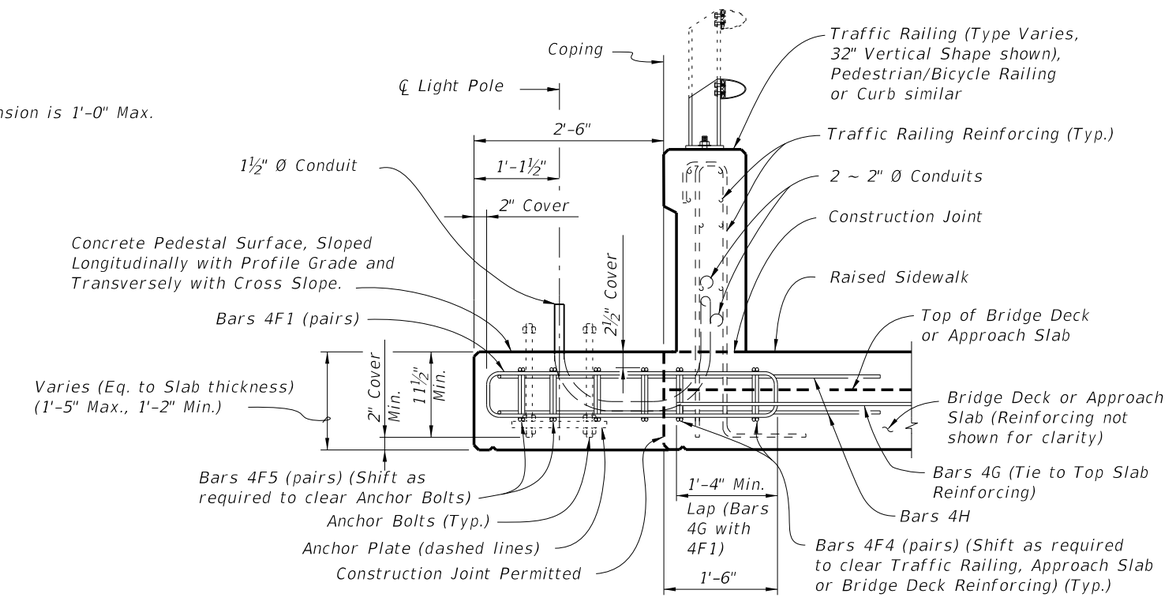

TYPICAL SECTION AT LIGHT POLE PEDESTAL FOR
APPROACH SLAB OR BRIDGE THICKNESS LESS THAN 1'-5½" AT COPING

CROSS REFERENCE:
For Detail "A", Anchor Plate Detail and Light Pole Pedestal Notes, see Sheet 3.

NOTE: Anchor Bolt, Nuts, Washers and Anchor Plate are dashed for clarity.

LIGHT POLE PEDESTAL FOR APPROACH SLAB OR BRIDGE DECK THICKNESS LESS THAN 1'-5½" AT COPING

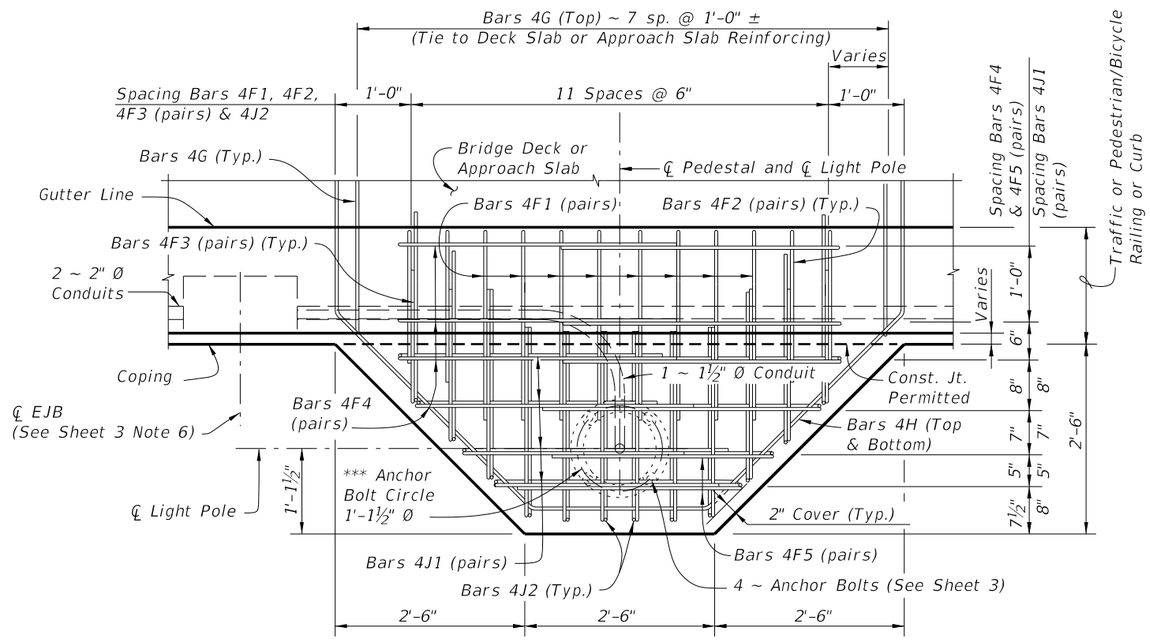

*** Anchor Bolt pattern orientation shall be as shown.

PLAN VIEW

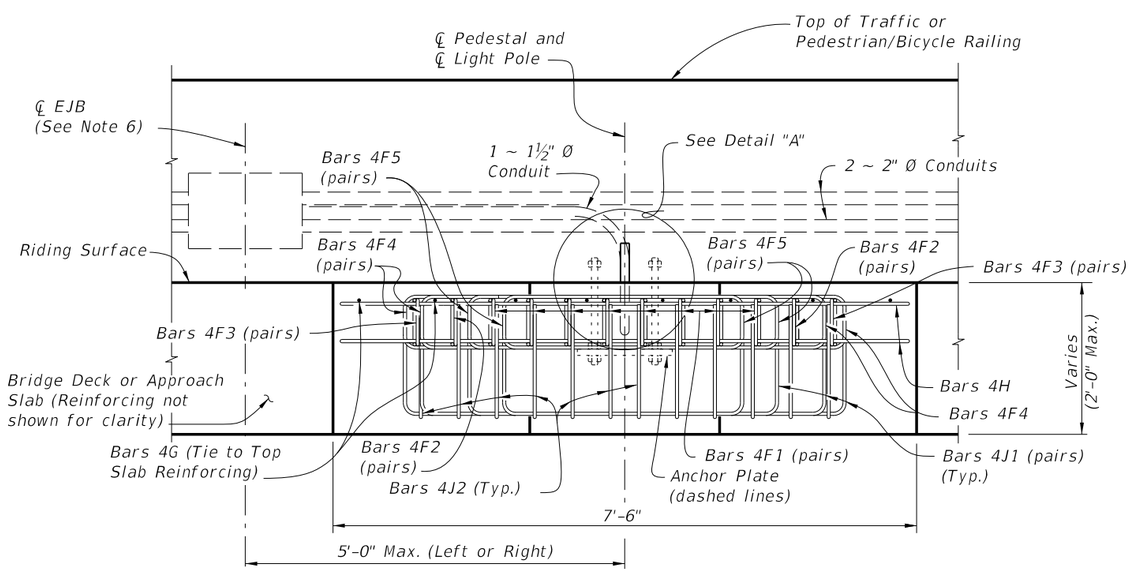

ELEVATION VIEW

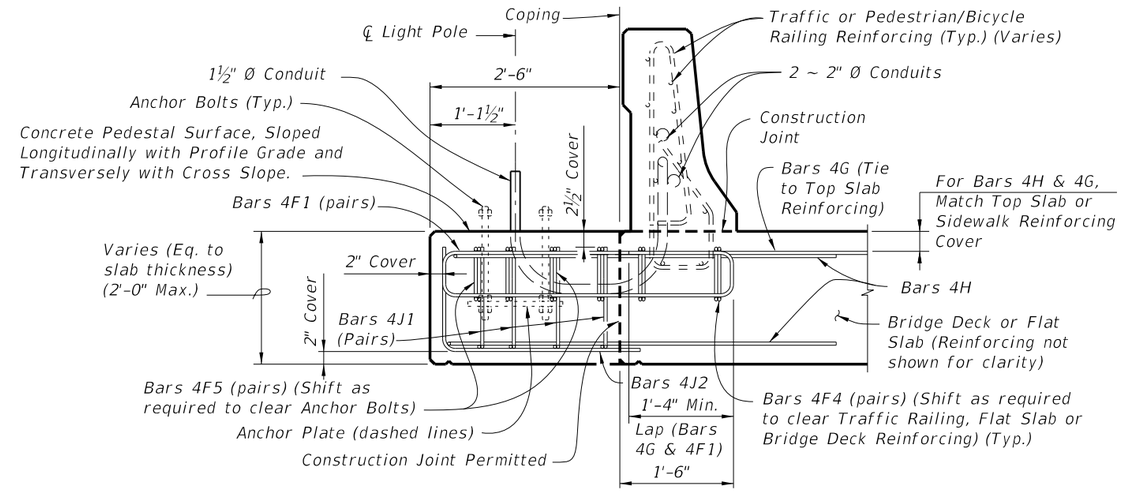

TYPICAL SECTION AT LIGHT POLE PEDESTAL FOR FLAT SLAB OR BRIDGE DECK THICKNESS AT COPING 1'-5½" OR GREATER

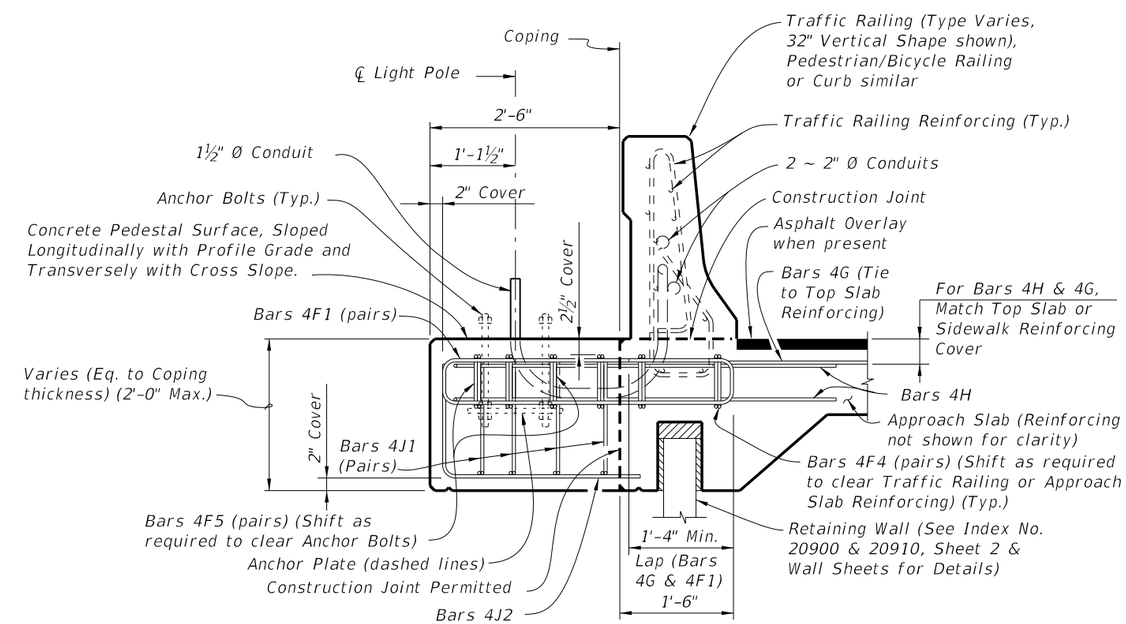

TYPICAL SECTION AT LIGHT POLE PEDESTAL FOR APPROACH SLAB ON RETAINING WALL

CROSS REFERENCE:
For Detail "A", Anchor Plate Detail and Light Pole Pedestal Notes, see Sheet 3.

NOTE: Anchor Bolt, Nuts, Washers and Anchor Plate are dashed for clarity.

LIGHT POLE PEDESTAL FOR APPROACH SLAB OR BRIDGE DECK THICKNESS AT COPING 1'-5½" OR GREATER

CONVENTIONAL REINFORCING STEEL BENDING DIAGRAMS

REINFORCING STEEL NOTES:

a. When Pedestal is attached to Pedestrian/Bicycle Railing – Index No. 820 or an 8" wide concrete curb and the Bridge Deck or Approach Slab thickness is less than 1'-1½", Bars 4F3 shall have leg length and bar length shown in parentheses.

b. The number of bars shown in parentheses is for Bars 4F4 when Pedestal is attached to Pedestrian/Bicycle Railing – Index No. 820 or an 8" wide concrete curb, and the Bridge Deck or Approach Slab thickness is less than 1'-1½".

c. Lap Splices for Bars 4F1, 4F2 & 4F3 shall be a minimum of 1'-4". Lap Splices for Bars 4F4 & 4F5 shall be minimum of 1'-8".

d. Bars 4J1 and 4J2 are not required when Pedestal thickness is less than 1'-5½". Field trim height of bars to maintain cover when Pedestal thickness is less than 2'-0". Field trim length of Bars 4J2 on Retaining Wall Coping to maintain cover.

e. All bar dimensions in the bending diagrams are out to out.

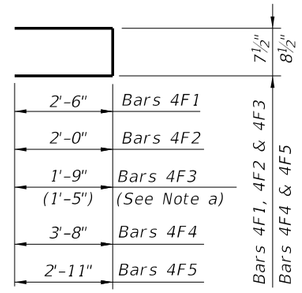

BARS 4F1, 4F2, 4F3, 4F4 & 4F5

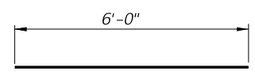

BAR 4G

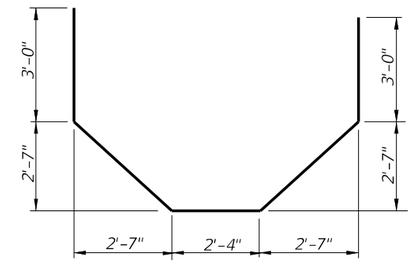

BAR 4H

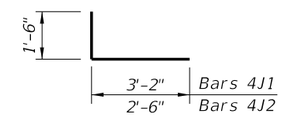

BARS 4J1 & 4J2

BILL OF REINFORCING STEEL

MARK	SIZE	NO. REQD.	LENGTH	NOTES
F1	4	16	5'-8"	c
F2	4	4	4'-8"	c
F3	4	4	4'-2" (3'-6")	a, c
F4	4	8 (6)	8'-3"	b, c
F5	4	4	6'-7"	c
G	4	8	6'-0"	–
H	4	2	15'-8"	–
J1	4	8	4'-8"	d
J2	4	12	4'-0"	d

( ) See Reinforcing Steel Note a & b.

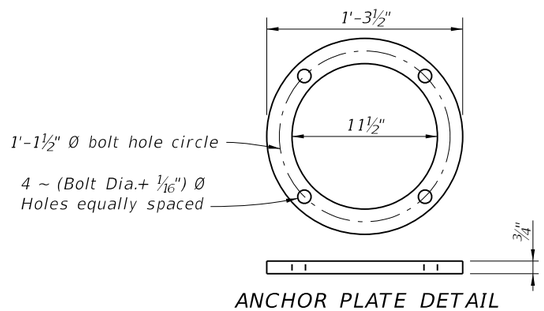

ANCHOR PLATE DETAIL

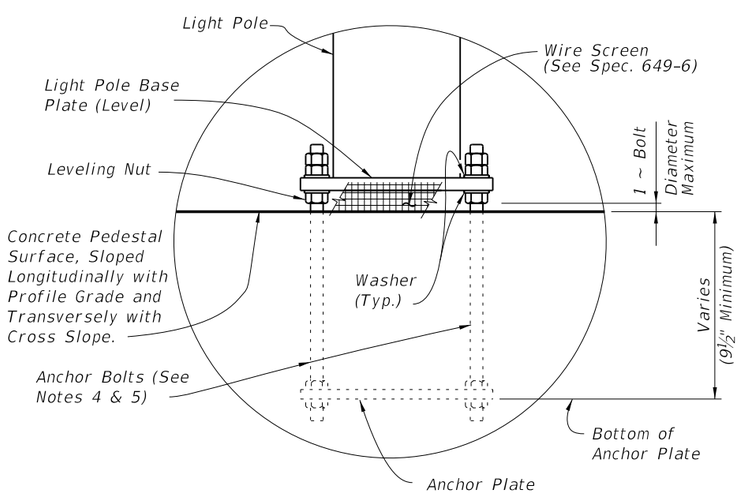

DETAIL "A"

CROSS REFERENCE:
For location of Detail "A" see Sheets 1 and 2.

LIGHT POLE PEDESTAL NOTES

1. Concrete and Reinforcing Steel required for the construction of the Pedestal shall meet the same requirements as the Traffic Railing or Pedestrian/Bicycle Railing the Pedestal is attached to.

2. Light Pole Pedestal may be used with the following:
   - Index No. 420 – Traffic Railing (32" F Shape),
   - Index No. 422 – Traffic Railing (42" Vertical Shape),
   - Index No. 423 – Traffic Railing (32" Vertical Shape),
   - Index No. 424 – Traffic Railing (Corral Shape),
   - Index No. 425 – Traffic Railing (42" F Shape),
   - Index No. 820 – Pedestrian/Bicycle Railing,
   - Index No. 821 – Aluminum Pedestrian/Bicycle Bullet Railing for Traffic Railing (32" F Shape), or
   - Index No. 5210 – Traffic Railing /Noise Wall (Bridge).

   Unless otherwise noted, Traffic Railing (32" F Shape) is shown in all Views and Sections. The Pedestal details for other Traffic Railings or Pedestrian/Bicycle Railing are similar.

3. The Pedestal and Deck are designed to resist the following Working Loads (Load Case 2) from the Light Pole applied at the top of the Pedestal:

Axial Dead Load	=	1.56 kip
Wind Load Moment about Transverse Axis	=	40.60 kip-Ft.
Wind Load Moment about Longitudinal Axis	=	28.30 kip-Ft.
Deadload Moment about Longitudinal Axis	=	1.69 kip-Ft.
Maximum Shear	=	1.38 kip
Torsion about Pole Axis	=	3.56 kip-Ft.

TABLE 1 - DESIGN LIMITATIONS FOR ANCHOR BOLTS (LOAD CASE 1)

WIND SPEED (MPH)	ARM LENGTH (Ft.)	BRIDGE DECK HEIGHT (Ft.)* DESIGN MOUNTING HEIGHT 40 Ft.	45 Ft.	50 Ft.
110	≤ 15	75	75	75
130	8 & 10	75	75	75
130	12	75	75	70
130	15	75	75	40
150	8	75	75	10
150	10	75	50	**
150	12	75	45	**
150	15	75	30	**

* Above natural ground or MLW. ** See Load Case 2.

4. ANCHOR BOLT DESIGN:
   Anchor Bolt design is based on the standard Roadway Aluminum Light Pole configurations shown on Index No. 17515 and the following design limitations:
   - Load Case 1: See Table 1
   - Load Case 2: 150 mph Design Wind Speed, 15' arm length, 50' Design Mounting Height with a 75' bridge deck height above natural ground, or MLW.

   Anchor Bolt Diameter: 1" Ø (Load Case 1), 1 ¼" Ø (Load Case 2).
   Anchor Bolts: ASTM F1554 Grade 55.
   - Nuts: ASTM A563 Grade A, Heavy-Hex.
   - Washers: ASTM F436 Type 1.

   Anchor Plate: ASTM A709 (Grade 36) or ASTM A36.
   All Nuts, Bolts and Washes shall be galvanized by ASTM F2329.

   The Contractor is responsible for ensuring the anchor bolt configuation is compatible with the light pole base plate. Submit modifications of the anchor bolt design to the Engineer for approval.

5. Anchor Bolts must be installed plumb.

6. For Conduit, Embedded Junction Boxes (EJB), Expansion/Deflection Fitting and adjacent Reinforcing Steel Details, see Utility Conduit Detail Sheets.

7. PAYMENT: The cost of Wire Screen, Anchor Bolts, Nuts, Washers and Anchor Plates shall be included in the Bid Price for Light Poles. The cost of all Labor, Concrete and Reinforcing Steel required for the Construction of the Pedestals, EJB, and Miscellaneous Hardware required for the completion of the Electrical System, shall be included in the Bid Price for the Traffic Railing or Pedestrian/Bicycle Railing the Pedestal is attached to.

ESTIMATED LIGHT POLE PEDESTAL QUANTITIES PER LIGHT POLE PEDESTAL

ITEM	UNIT	QUANTITY
Concrete Per Pedestal Thickness	CY/In.	0.040
Reinforcing Steel	LB	195 (182)

(The Reinforcing Steel quantity shown in parenthesis is for a Pedestal attached to Pedestrian/Bicycle Railing – Index No. 820 with Bridge Deck or Approach Slab thinner than 1'-1½". Add 59 Lbs. for Bars 4J1 & 4J2 when Pedestal Thickness is greater than 1'-5")