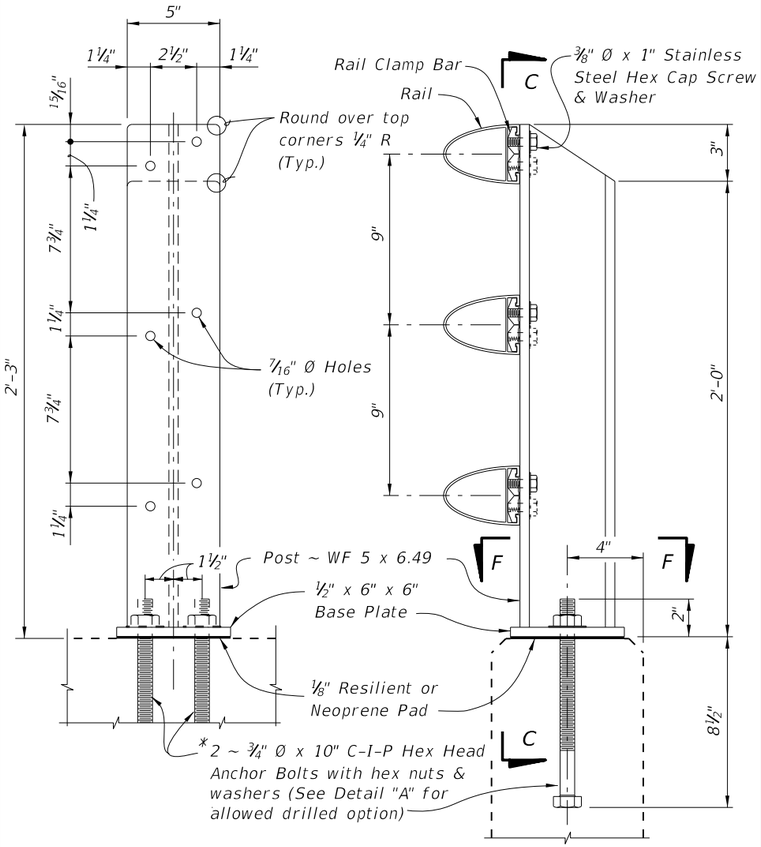

SECTION C-C
(RAILS NOT SHOWN)

ELEVATION
OF POST "A"

POST "A" DETAILS FOR SPECIAL HEIGHT BICYCLE RAILING ON CONCRETE PARAPET (INDEX NO. 820)

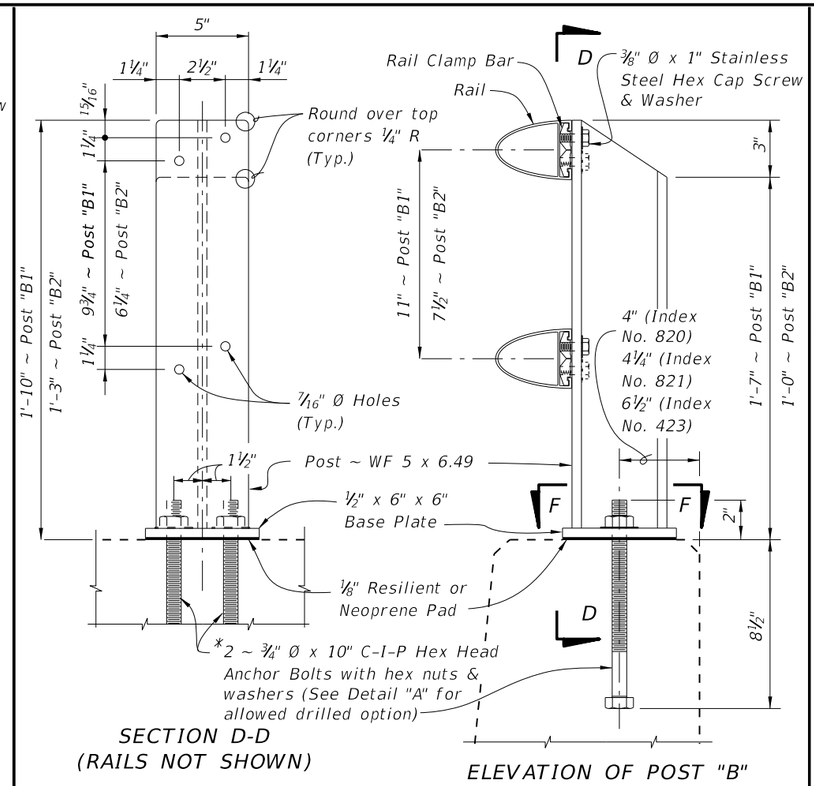

SECTION D-D
(RAILS NOT SHOWN)

ELEVATION OF POST "B"

POST "B1" DETAILS FOR SPECIAL HEIGHT BICYCLE RAILING ON TRAFFIC RAILINGS (INDEX NO. 423 AND 821) AND POST "B2" DETAILS FOR PEDESTRIAN/BICYCLE RAILING ON CONCRETE PARAPETS (INDEX NO. 820)

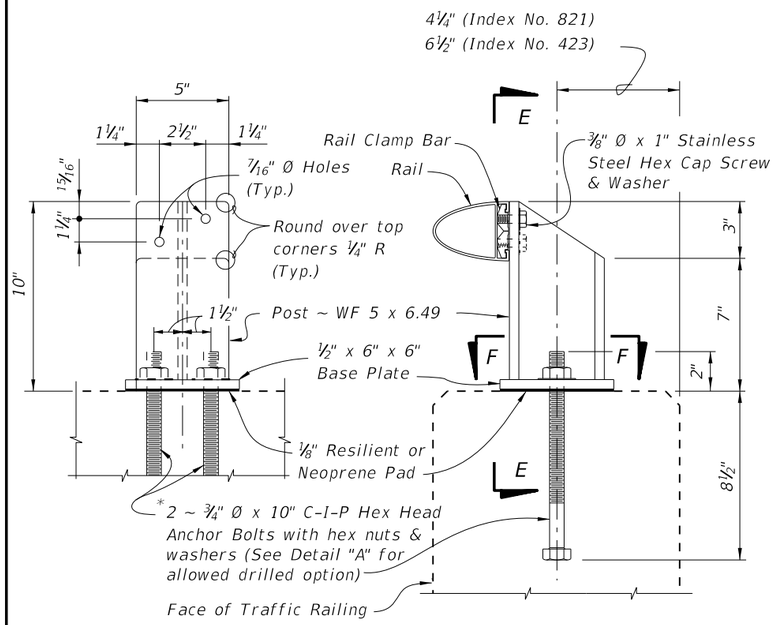

SECTION E-E
(RAIL NOT SHOWN)

ELEVATION
OF POST "C"

POST "C" DETAILS FOR PEDESTRIAN/BICYCLE RAILING ON TRAFFIC RAILINGS (INDEX NO. 423 AND 821)

NOTE: After nuts have been tightened, the bolt threads shall be deformed to prevent removal of nuts. Tack welding of nuts to anchor bolts, to prevent theft, is permitted. Coat deformed or tack welded threads with a galvanizing compound in accordance with Section 562 of the Specifications.

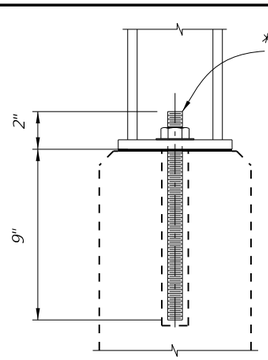

*2 ~ ¾" Ø x 11" Anchor Bolts threaded full length with hex nuts and washers set in drilled holes (diameter per manufacturer's recommendation) with an Adhesive Bonding System in accordance with Sections 416 and 937 of the Specifications. Expansion Anchors are not permitted. Cutting of reinforcing steel is permitted for drilled hole installation.

ALTERNATE ANCHOR BOLT DETAIL "A"
(Concrete Parapet Shown,
Traffic Railings Similar)

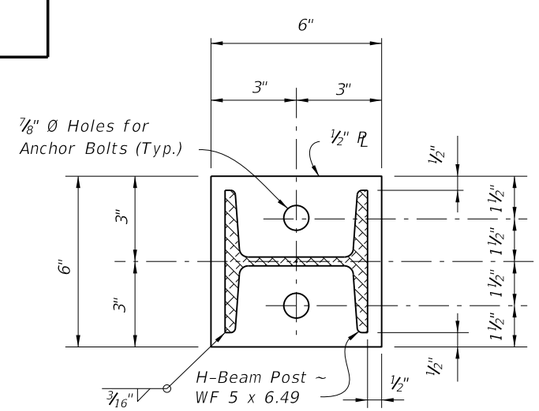

SECTION F-F
BASE PLATE DETAIL

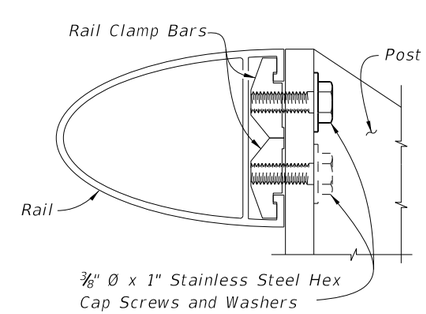

RAIL TO POST CONNECTION DETAIL

CROSS REFERENCES:

For Post "A" and Post "B2" spacing see Index No. 820.

For Post "B1" & Post "C" spacing see Index Nos. 423 or 821.

For Rail Details see Index Sheet 2.

For Railing Notes and Tapered End Transition Details see Sheet 3.

LAST REVISION	REVISION	DESCRIPTION:			INDEX NO.	SHEET NO.
01/01/12			FDOT 2014 DESIGN STANDARDS	BRIDGE ALUMINUM PEDESTRIAN/BICYCLE BULLET RAILING DETAILS	822	1 of 3

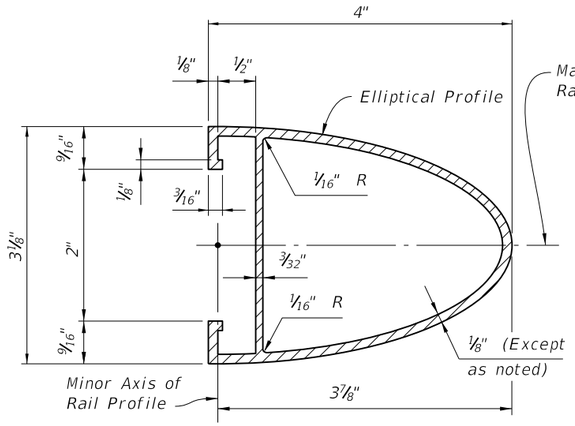

SECTION A-A
TYPICAL SECTION THRU RAIL

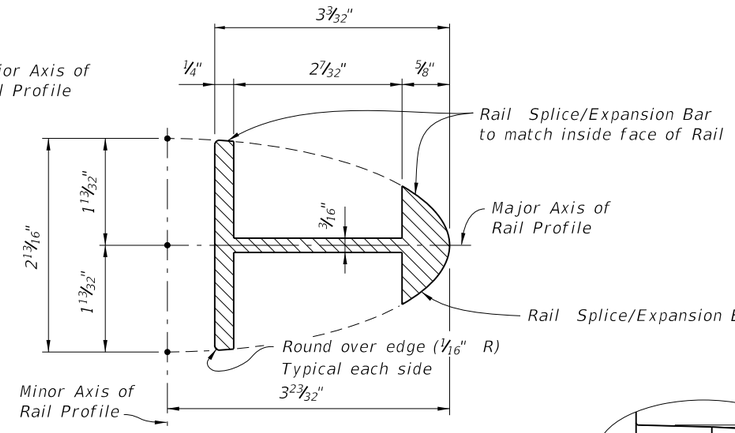

SECTION B-B - RAIL SPLICE/EXPANSION BAR
(Rail not shown for clarity)

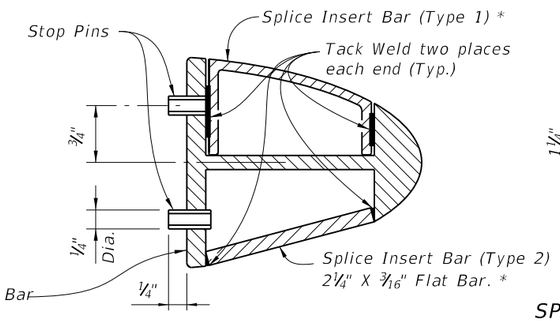

SECTION C-C

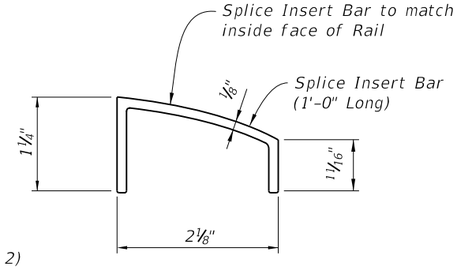

SPLICE INSERT BAR DETAIL (TYPE 1)

* Use of either Type 1 or Type 2 Splice Insert Bars is at the option of the Contractor.

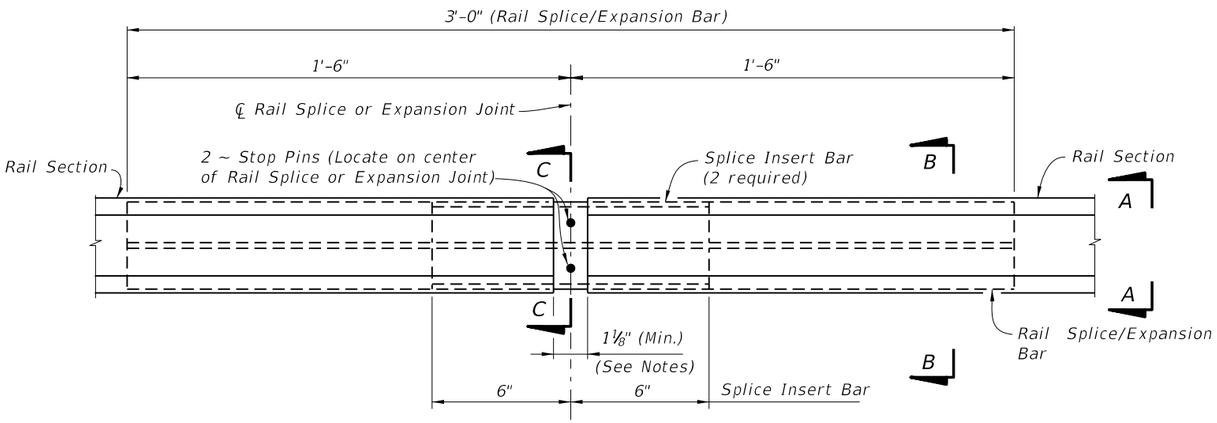

RAIL SPLICE ASSEMBLY DETAIL (TYPICAL AT BRIDGE EXPANSION JOINTS AND RAIL SPLICE LOCATIONS)

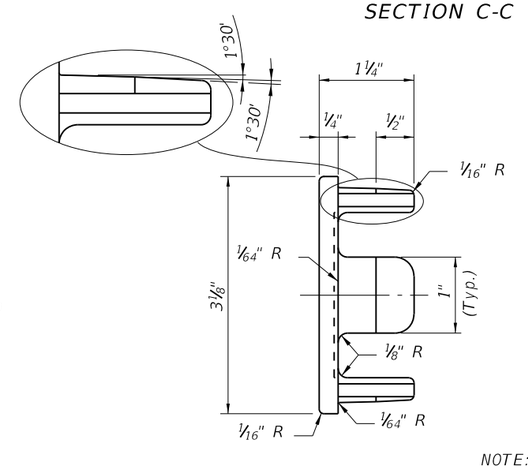

VIEW D-D

NOTE: Provide for drive fit.

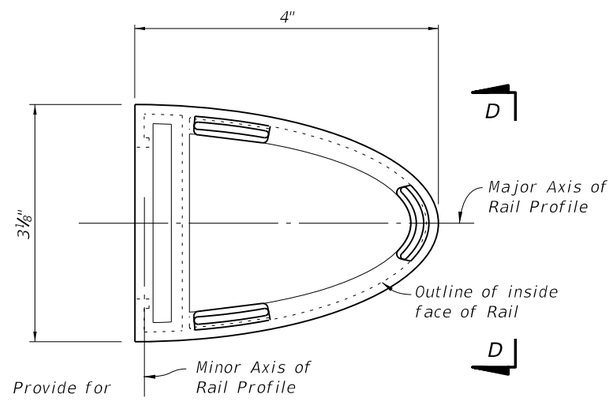

RAIL END CAP DETAIL

CROSS REFERENCE:
For Railing Notes and Tapered End Transition Details, See Sheet 3.

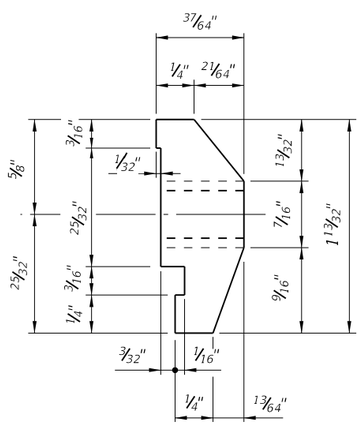

VIEW E-E

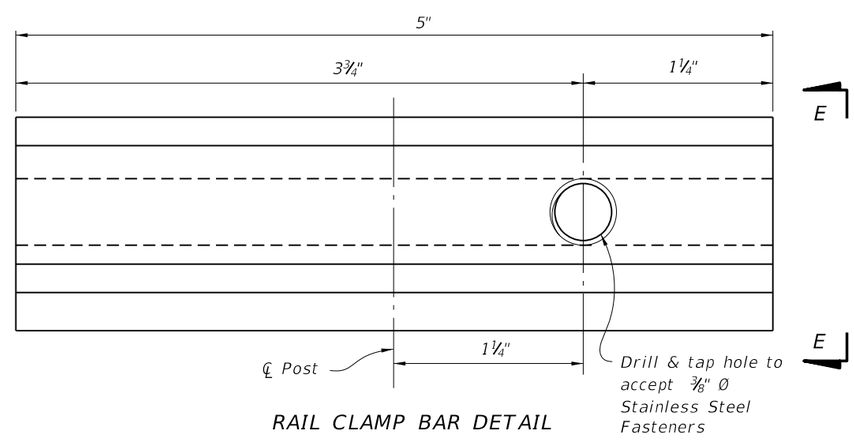

RAIL CLAMP BAR DETAIL

LAST REVISION	REVISION	DESCRIPTION:			INDEX NO.	SHEET NO.
01/01/12			FDOT 2014 DESIGN STANDARDS	BRIDGE ALUMINUM PEDESTRIAN/BICYCLE BULLET RAILING DETAILS	822	2 of 3

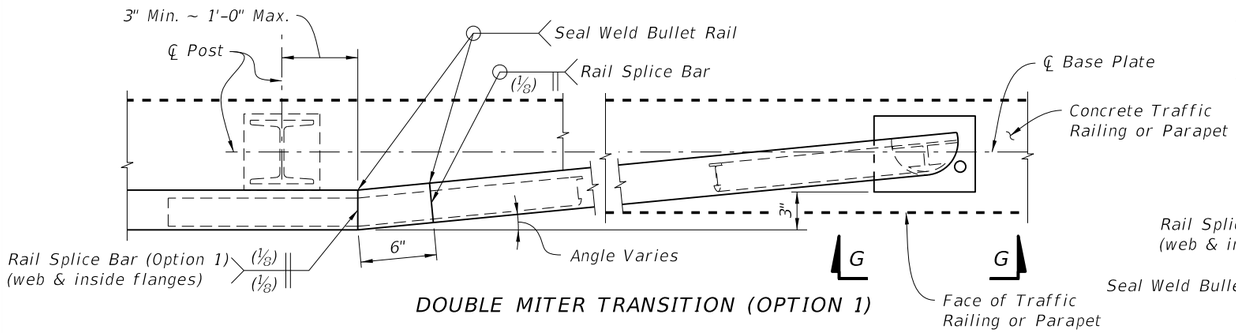

DOUBLE MITER TRANSITION (OPTION 1)

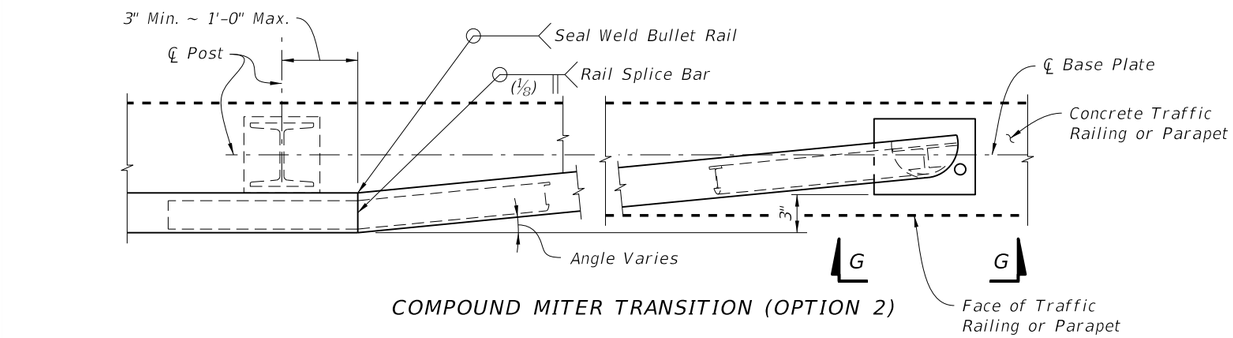

COMPOUND MITER TRANSITION (OPTION 2)

PARTIAL PLAN OF TAPERED END TRANSITIONS

(Single Rail Shown, Double or Triple Rail Similar)

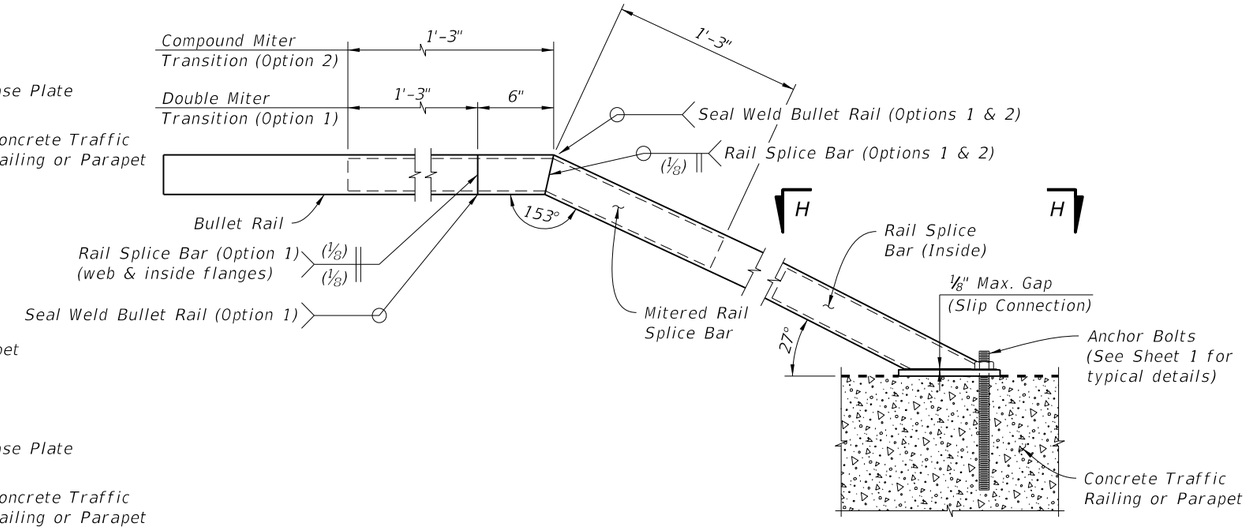

ELEVATION OF TAPERED END TRANSITION
(Single Rail Shown, Double or Triple Rail Similar)

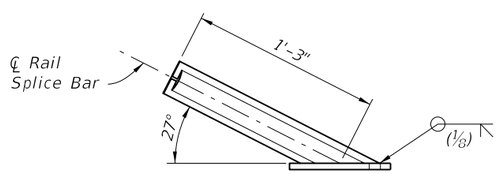

VIEW G-G TRANSITION BASE PLATE
(Bullet Rail not shown for Clarity)

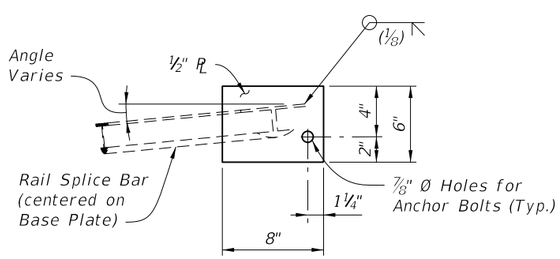

VIEW H-H TRANSITION BASE PLATE
(Bullet Rail not shown for Clarity)

RAILING NOTES:

PAYMENT: Payment for the railing includes Rails, Posts, Rail Splice Assemblies, Rail Clamp Bars, Rail End Caps, Anchor Bolts, Nuts, Resilient Pads, Screws and Washers and all incidental materials and labor required to complete the installation.

POST ASSEMBLY: Fabricated wrought aluminum; Post – ASTM B221, alloy 6061-T6, or alloy 6351-T5; Base Plate – ASTM B209, alloy 6061-T6.

WELDING: Welding of aluminum components shall be in accordance with ANSI and AWS D1.2 "Structures Welding Code – Aluminum".

RAIL AND RAIL SPLICE ASSEMBLIES: Aluminum; ASTM B221, alloy 6061-T6, or alloy 6351-T5. Stop Pins shall be press-fit Aluminum or Stainless Steel pins or tubes, unless otherwise approved by the Engineer.

RAIL CLAMP BAR: Aluminum; ASTM B221, alloy 6061-T6, or alloy 6351-T5.

STAINLESS STEEL FASTENERS: 3/8" Ø Hex Cap Screws and Washers shall be ASTM F-593, alloy group 2 (316).

ANCHOR BOLTS: Anchor bolts shall be in accordance with ASTM A36 or ASTM F1554, Grade 36. Anchor Bolts, Nuts, and Washers shall be hot dip galvanized in accordance with Specification Section 962.

RAIL END CAP: ASTM B26 sand cast aluminum alloy 356.0-F.

RAIL INSTALLATION: Set Rail Posts normal to Profile Grade longitudinally and vertical transversely. Post spacings that land on barrier or parapet obstacles such as armor expansion plates etc. shall be adjusted to clear obstacles by 9" without exceeding maximum post spacing. Post shall be uniformly spaced with reasonable consistency. Set Posts on 1/8" thick resilient or neoprene pads in accordance with Specification Section 932. The pad dimension shall be the same as the post base plate. Provide rail expansion joint in panels between posts on either side of Bridge Expansion Joints. Rail expansion joints shall be similar to rail splice with provision for movement equal to 1.5 times the bridge joint opening or 1" greater than the expected joint movement. Take care to ensure rails are set with the proper openings. Remove any burrs or sharp edges on rails and posts to prevent injury.

RAIL SPLICES: Rails shall be continuous over a minimum of 3 posts, except that lengths less than 12' need only be continuous over 2 posts. Space splices at 40'-0" maximum centers. Splice all rails in any railing section about the same center line.

RESILIENT AND NEOPRENE PADS: Resilient and Neoprene Pads shall be in accordance with the Specifications except that testing of the finished pads is not required. Neoprene pads shall be durometer hardness 60 or 70.

SHOP DRAWINGS: Submit typical details for straight alignments and complete details for end terminations or curved alignments with radii < 40', including post and expansion joint locations of the proposed railing for the Engineer's approval prior to fabrication.

CROSS REFERENCE:
For Post Details see Sheet 1.
For Rail Details see Sheet 2.