DESIGN STANDARDS

FOR DESIGN, CONSTRUCTION, MAINTENANCE AND UTILITY OPERATIONS ON THE STATE HIGHWAY SYSTEM

2013

TOPIC NO. 625-010-003

Approved For Use On Federal Aid Projects

For Martin Knopp, Division Administrator

State of Florida, Department Of Transportation
Roadway Design Office
Mail Station 32
605 Suwannee Street
Tallahassee, Florida 32399-0450

NOTICE

The Design Standards are intended to support the various engineering processes for design, construction, maintenance and utility operations on the State Highway System. They are established to ensure uniform accountability of these operations in the application of standard policies, designs and details in the preparation of contract plans for construction of roadways and structures. These Standards may be adopted by other authorities for use on projects under their jurisdiction.

It is the responsibility of the Design Engineer of Record using these Standards to determine the fitness for a particular use of each standard in the design of a project. The inappropriate use of and adherence to these standards does not exempt the engineer from the professional responsibility of developing an appropriate design.

PATENTED DEVICES, MATERIALS AND PROCESSES

The use of any design, method, process, material or device either expressed or implied by these standards that are covered by patent, copyright, or proprietary privilege is the sole responsibility of the user. Any infringement on the rights of the inventor, patentee, assignee or licensee shall be the sole responsibility of the user. For additional information refer to Subsection 7-3 of the FDOT Standard Specifications for Road and Bridge Construction.

Distribution of Exempt Public Documents:

It is the policy of the Department to protect the State Highway System's infrastructure from disclosure under Florida's public records law for documents concerning Department structures. This exemption is created by Section 119.07(3)(ee), F.S. and covered by Department Procedure "Distribution of Exempt Public Documents Concerning Department Structures and Security System Plans (Topic No. 050-020-026)." Structure is defined in Section 334.03(28), F.S., as "a bridge, viaduct, tunnel, causeway, approach, ferry slip, culvert, toll plaza, gate, or other similar facility used in connection with a transportation facility." This includes pipes and pipe systems. Therefore, those portions of Department plans that depict pipes, pipe systems, or the internal layout and structural elements of a structure owned or operated by the Department, are exempt from a public records request under Section 119.07(3)(ee), F.S.. This applies to all formats (paper, electronic, etc.), and at any phase of completion (existing, draft, preliminary, phase reviews, final). Entities or persons outside the Department requesting or receiving copies of any portion of plans considered Exempt Documents will need to complete a request form (Form No. 050-020-26). The form also advises the requestor that the entity or person receiving the information shall maintain the confidential and exempt status of the information. This procedure applies to both Department internal or contracted staff who produce such Exempt Documents in their Department work or have other methods of access to such Exempt Documents in the distribution to persons or entities outside of the Department. Refer to Topic No. 050-020-026 for further requirements.

The official version of the Design Standards is the PDF version and can be found at:
http://www.dot.state.fl.us/rddesign/DesignStandards/Standards.shtm

CERTIFICATION STATEMENT

I hereby certify that these Design Standards were compiled under my responsible charge from designs prepared, examined, adopted, and implemented by the Florida Department of Transportation in accordance with established procedures, and as approved by the Federal Highway Administration.

Manager, Traffic Data Section
Transportation Statistics Office
Richard L. Reel, Jr.
P.E. No. 22400

Hash Code:
499BE6B3-DC472FAE-110BA9BD-1D074C44-B9C6B811

As To Planning
Design Standards No.

17900

As To Roadway
Design Standards Nos.

001-105
199-288
293-415
430, 461
500
505-535
546, 560
600-803
870-880
11200-11860
11871
13417-17890

State Roadway Design Engineer
David C. O'Hagan
P.E. No. 33713

Hash Code:
CBED14AC-B18184E4-7493C881-AB6EBBD5-65810C4E

State Traffic Operations Engineer
Mark C. Wilson
P.E. No. 46780

Hash Code:
F312151F-D84C5A08-3E7A3C81-0644D626-040605BC

As To ITS
Design Standards Nos.

18100-18300

As To Structures
Design Standards Nos.

289-292
420-425
470-484
501, 540
810-862
5200-6201
11870
20005-21930

State Structures Design Engineer
Robert V. Robertson, Jr.
P.E. No. 36160

Hash Code:
F348536F-50675F43-17720CB9-171B0634-5380733A

As To Landscape Architecture
Design Standards Nos.

544, 591

State Transportation Landscape Architect
Jeff H. Caster
LA0001592

Hash Code:
307163EB-D401AE3F-C42A7838-9FF7ABBD-BEB7968F

6/28/2012 1:50:45 PM rd960rth C:\d\projects\standards\roadway\00000\00000_Cover-03.dgn

TABLE OF CONTENTS

REVISIONS

Booklet Revisions

ABBREVIATIONS AND SYMBOLS

001 Standard Abbreviations
002 Standard Symbols

EROSION CONTROL AND WATER QUALITY

104 Permanent Erosion Control
105 Shoulder Sodding and Turf on Existing Facilities

DRAINAGE

199 Geotextile Criteria
200 Structure Bottoms – Type J and P
201 Supplementary Details for Manholes and Inlets
205 Cover Height
206 Trench Drain
210 Curb Inlet Tops – Types 1, 2, 3 and 4
211 Curb Inlet Tops – Types 5 and 6
212 Curb Inlet – Type 7
213 Curb Inlet – Type 8
214 Curb Inlet Top – Type 9
215 Curb Inlet Top – Type 10
216 Closed Flume Inlet
217 Median Barrier Inlets Types 1, 2, 3, 4 and 5
218 Barrier Wall Inlet
219 Concrete Barrier Wall Inlet
220 Gutter Inlet – Type S
221 Gutter Inlet – Type V
230 Ditch Bottom Inlet – Type A
231 Ditch Bottom Inlet – Type B
232 Ditch Bottom Inlet – Type C, D, E and H
233 Ditch Bottom Inlet – Type F and G
234 Ditch Bottom Inlet – Type J
235 Ditch Bottom Inlet – Type K
240 Skimmer For Outlet Control Structures
241 Skimmers For French-Drain Outlets
245 Underdrain Inspection Box
250 Straight Concrete Endwalls – Single And Multiple Pipe
251 Straight Concrete Endwalls – Single And Double 60" Pipe
252 Straight Concrete Endwalls – Single And Double 66" Pipe
253 Straight Concrete Endwalls – Single And Double 72" Pipe
255 Straight Concrete Endwalls – Single 84" Pipe
258 Straight Sand-Cement Endwalls
260 U-Type Concrete Endwalls With Grates – 15" to 30" Pipe
261 U-Type Concrete Endwalls-Baffles and Grate Optional – 15" To 30" Pipe
264 U-Type Concrete Endwall-Energy Dissipator – 30" to 72" Pipe
266 Winged Concrete Endwalls – Single Round Pipe
268 U-Type Sand-Cement Endwalls
270 Flared End Section
272 Cross Drain Mitered End Section
273 Side Drain Mitered End Section
280 Miscellaneous Drainage Details
281 Ditch Pavement and Sodding
282 Back of Sidewalk Drainage
283 Median Opening Flume
284 Concrete Shoulder Gutter Spillway
285 French Drain
286 Underdrain
287 Concrete Pavement Subdrainage
288 Deep Well Injection Box
289 Concrete Box Culvert Details (LRFD)
291 Supplemental Details for Precast Concrete Box Culverts
292 Standard Precast Concrete Box Culverts
293 Safety Modifications for Inlets in Box Culverts
295 Safety Modifications for Endwalls

CURBS, CONCRETE PAVEMENT AND SIDEWALKS

300 Curb & Curb and Gutter
301 Turn Lanes
302 Traffic Separators
303 Curb Return Profiles
304 Public Sidewalk Curb Ramps
305 Concrete Pavement Joints
306 Bridge Approach Expansion Joint –Concrete Pavement
307 Miscellaneous Utility Details
308 Concrete Slab Replacement
310 Concrete Sidewalk

TRAFFIC RAILINGS

400 Guardrail
402 Guardrail Transitions and Connections for Existing Bridges
403 Guardrail Transitions For Existing Bridge Traffic Railing Retrofits
410 Concrete Barrier Wall
411 Pier Protection Barrier
412 Low Profile Barrier
414 Type K Temporary Concrete Barrier
415 Temporary Concrete Barrier
420 Traffic Railing – (32" F Shape)
421 Traffic Railing – (Median 32" F Shape)
422 Traffic Railing – (42" Vertical Shape)
423 Traffic Railing – (32" Vertical Shape)
424 Traffic Railing – (Corral Shape)
425 Traffic Railing – (42" F Shape)
461 Opaque Visual Barrier
470 Traffic Railing-(Thrie Beam Retrofit) General Note & Details
471 Traffic Railing-(Thrie Beam Retrofit) Narrow Curb
472 Traffic Railing-(Thrie Beam Retrofit) Wide Strong Curb Type 1
473 Traffic Railing-(Thrie Beam Retrofit) Wide Strong Curb Type 2
474 Traffic Railing-(Thrie Beam Retrofit) Intermediate Curb
475 Traffic Railing-(Thrie Beam Retrofit) Wide Curb Type 1
476 Traffic Railing-(Thrie Beam Retrofit) Wide Curb Type 2
480 Traffic Railing-(Vertical Face Retrofit) General Notes & Details
481 Traffic Railing-(Vertical Face Retrofit) Narrow Curb
482 Traffic Railing-(Vertical Face Retrofit) Wide Curb
483 Traffic Railing-(Vertical Face Retrofit) Intermediate Curb
484 Traffic Railing- (Vertical Face Retrofit) Spread Footing Approach

GENERAL

500 Removal of Organic and Plastic Material
501 Geosynthetic Reinforced Soils
505 Embankment Utilization
506 Miscellaneous Earthwork Details
510 Superelevation – Rural Highways, Urban Freeways and High Speed Urban Highways
511 Superelevation – Urban Highways and Streets
514 Optional Base Group and Structural Numbers
515 Turnouts
516 Turnouts – Resurfacing Projects
518 Rumble Strips
521 Concrete Steps
525 Ramp Terminals
526 Roadway Transitions
527 Directional Median Opening
530 Rest Area Pavilion
532 Mailboxes
535 Tractor Crossings
540 Settlement Plate
544 Landscape Installation
546 Sight Distance at Intersections
560 Railroad Crossings
591 Landscape Irrigation Sleeves

TRAFFIC CONTROL THROUGH WORK ZONES

600 General Information for Traffic Control Through Work Zones
601 Two-Lane, Two-Way, Work Outside Shoulder
602 Two-Lane, Two-Way, Work On Shoulder
603 Two-Lane, Two-Way, Work Within The Travel Way
604 Two-Lane, Two-Way, Work in Intersection
605 Two-Lane, Two-Way, Work Near Intersection
606 Two-Lane, Two-Way, Work Within the Travel Way – Signal Control
607 Two-Lane, Two-Way, Mobile Operation, Work On Shoulder and Work Within the Travel Way
608 Two-Lane, Two-Way, Temporary Diversion Connection
611 Multilane, Work Outside Shoulder
612 Multilane, Work On Shoulder
613 Multilane, Work Within Travel Way-Median or Outside Lane
614 Multilane, Work Within Travel Way-Center Lane
615 Multilane, Work in Intersection
616 Multilane, Work Near Intersection-Median or Outside Lane
617 Multilane, Work In Intersection – Center Lane
618 Multilane, Work In Intersection –Two Lanes Closed-45mph or Less
619 Multilane, Mobile Operations Work on Shoulder, Work Within Travel Way
620 Multilane, Divided, Temporary Diversion Connection
621 Multilane Undivided, Temporary Diversion Connection
622 Multilane, Work Near Intersection-Temporary Diversion Connection 35mph or Less
623 Multilane, Work Within the Travel Way Double Lane Closure
625 Temporary Road Closure- 5 Minutes or Less
628 Two Way Left Turn Closure
630 Crossover for Paving Train Operations, Rural
631 Temporary Crossover
635 Work in Vicinity of Railroad Crossing
640 Converting Two-Lanes to Four-Lanes Divided, Rural
641 Converting Two-Lanes to Four-Lanes Divided, Urban
642 Transitions for Temporary Concrete Barrier Wall on Freeway Facilities
650 Two-Lane Two-Way, Rural Structure Replacement
651 Multilane Divided, Maintenance and Construction
655 Traffic Pacing
660 Pedestrian Control for Closure of Sidewalks
665 Limited Access, Temporary Opening
667 Toll Plaza, Traffic Control Standards
670 Motorist Awareness System

ROADSIDE SAFETY

700 Roadside Offsets

FENCING AND PEDESTRIAN RAILINGS

800 Fence Location
801 Fence – Type A
802 Fence – Type B
803 Cantilever Slide Gate – Type B Fence
810 Bridge Fencing (Vertical)
811 Bridge Fencing (Curved Top)
812 Bridge Fencing (Enclosed)
820 Bridge Pedestrian/Bicycle Bullet Railing
821 Bridge Aluminum Pedestrian/Bicycle Bullet Railing for Traffic Railing (32" F Shape)
822 Bridge Aluminum Pedestrian/Bicycle Bullet Railing Details
825 42" Concrete Pedestrian/Bicycle Railing
851 Bridge Pedestrian/Bicycle Picket Railing (Steel)
852 Steel Pedestrian/Bicycle Railing
861 Bridge Pedestrian/Bicycle Picket Railing (Aluminum)
862 Aluminum Pedestrian/Bicycle Railing
870 Aluminum Pipe Guiderail
880 Steel Pipe Guiderail

SOUND BARRIER SYSTEMS

5200 Precast Sound Barriers
5210 Traffic Railing/Sound Barrier (8'-0")
5211 Traffic Railing/Sound Barrier (14'-0")
5212 Traffic Railing/Sound Barrier (8'-0") Junction Slab
5213 Traffic Railing/Sound Barrier T-Shaped Spread Footing
5214 Traffic Railing/Sound Barrier L-Shaped Spread Footing
5215 Traffic Railing/Sound Barrier Trench Footing

WALL SYSTEMS

6010 C-I-P Cantilever Retaining Wall
6011 C-I-P Gravity Wall
6020 Permanent MSE Retaining Wall Systems
6030 Temporary MSE Retaining Wall Systems
6040 Precast Concrete Sheet Pile Wall
6100 MSE Wall Coping (Precast or C-I-P)
6110 Wall Coping With Traffic Railing/Junction Slab
6120 Wall Coping With Traffic Railing/Raised Sidewalk
6130 Wall Coping/Parapet With C-I-P Sidewalk
6200 Coping Mounted Light Pole Pedestal
6201 Junction Slab at Drainage Inlet Openings

TABLE OF CONTENTS

SIGNING AND MARKINGS

11200 Multi-Column Ground Sign
11300 Steel Overhead Sign Structures
11310 Cantilever Sign Structure
11320 Span Sign Structure
11860 Single Column Ground Signs
11870 Single Post Bridge Mounted Sign Support
11871 Signle Post Median Barrier Mounted Sign Support
13417 Mounting Exit Number Panels To Highway Signs
17302 Typical Sections For Placement of Single & Multi-Column Signs
17328 Typical Signing for Truck Weigh & Inspection Stations
17344 School Signs & Markings
17345 Interchange Markings
17346 Special Marking Areas
17347 Bicycle Markings
17349 Traffic Controls For Street Terminations
17350 Signing For Motorist Services
17351 Welcome Center Signing
17352 Typical Placement Of Reflective Pavement Markers
17354 Tourist Oriented Directional Signs
17355 Special Sign Details
17356 Span Wire Mounted Sign Details
17357 Bridge Weight Restrictions
17359 Rural Narrow Bridge Treatment

ROADWAY LIGHTING

17500 Conventional Lighting
17501 Highway Lighting General Notes
17502 Highmast Lighting
17504 Service Point Details
17505 External Lighting For Signs
17515 Standard Aluminum Lighting

TRAFFIC SIGNAL AND EQUIPMENT

17600 Motorist Aid Call Box
17700 Pull, Splice and Junction Box
17721 Conduit Installation Details
17723 Steel Strain Pole
17725 Concrete Poles
17727 Signal Cable & Span Wire Installation Details
17733 Aerial Interconnect
17736 Electrical Power Service
17743 Standard Mast Arm Assemblies
17745 Mast Arm Assemblies
17748 Free-Swinging Internally-Illuminated Street Sign Assemblies
17764 Pedestrian Control Signal Installation Details
17781 Vehicle Loop Installation Details
17784 Pedestrian Detector Assembly Installation Details
17841 Cabinet Installation Details
17870 Standard Signal Operating Plans
17881 Advance Warning For R/R Crossing
17882 Railroad Grade Crossing Traffic Control Devices
17890 Traffic Control Devices For Movable Span Bridge Signals

PLANNING

17900 Traffic Monitoring Site

INTELLIGENT TRANSPORTATION SYSTEMS (ITS)

18100 CCTV Pole Placement
18101 Typical CCTV Site
18102 CCTV Pole Grounding
18104 Typical CCTV Cabinet Equipment Layout
18105 CCTV Block Diagram
18107 Ground Mounted CCTV Cabinet
18108 Pole Mounted CCTV Cabinet
18110 Camera Mounting Details
18111 Steel CCTV Pole
18113 Concrete CCTV Pole
18202 Fiber Optic Trench Details
18300 Dynamic Message Sign Walk-In

PRESTRESSED CONCRETE BEAMS

20005 Prestressed Beam Temorary Bracing
20010 Typical Florida-I Beam Details and Notes
20036 Florida-I 36 Beam - Standard Details
20045 Florida-I 45 Beam - Standard Details
20054 Florida-I 54 Beam - Standard Details
20063 Florida-I 63 Beam - Standard Details
20072 Florida-I 72 Beam - Standard Details
20078 Florida-I 78 Beam - Standard Details
20084 Florida-I 84 Beam - Standard Details
20096 Florida-I 96 Beam - Standard Details
20199 Build-Up & Deflection Data For Florida-I Beams
20210 Typical Florida-U Beam Details and Notes
20248 Florida U 48 Beam - Standard Details
20254 Florida U 54 Beam - Standard Details
20263 Florida U 63 Beam - Standard Details
20272 Florida U 72 Beam - Standard Details
20299 Build-Up and Deflection Data For Florida U Beams

BRIDGE BEARINGS

20502 Beveled Bearing Plate Details - Prestressed Florida U-Beams
20510 Composite Elastomeric Bearing Pads - Prestressed Florida-I Beams
20511 Bearing Plates (Type 1)- Prestressed Florida-I Beams
20512 Bearing Plates (Type 2) - Prestressed Florida-I Beams

SQUARE AND ROUND CONCRETE PILES

20600 Notes and Details For Square Prestressed Concrete Piles
20601 Square Prestressed Concrete Pile Splices
20602 EDC Instrumentation For Square Prestressed Concrete Piles
20612 12" Square Prestressed Concrete Pile
20614 14" Square Prestressed Concrete Pile
20618 18" Square Prestressed Concrete Pile
20620 20" Square Prestressed Concrete Pile
20624 24" Square Prestressed Concrete Pile
20630 30" Square Prestressed Concrete Pile
20631 High Moment Capacity 30" Square Prestressed Concrete Pile
20654 54" Precast/Post- Tensioned Concrete Cylinder Pile
20660 60" Prestressed Concrete Cylinder Pile

APPROACH SLABS

20900 Approach Slabs (Flexible Pavement Approaches)
20910 Approach Slabs (Rigid Pavement Approaches)

BRIDGE EXPANSION JOINTS

21100 Strip Seal Expansion Joint
21110 Poured Joint With Backer Rod Expansion Joint System

STRUCTURES ACCESS AND LIGHTING

21200 Light Pole Pedestal
21210 Conduit Details
21220 Navigation Light System Details (Fixed Bridges)
21240 Maintenance Lighting For Box Girders
21250 Access Hatch Assembly For Steel Box Secitons
21251 Access Hatch Assembly For Concrete Box Secitons

STANDARD BAR BENDING DETAILS

21300 Standard Bar Bending Details

TEMPORARY DETOUR BRIDGES

21600 Temporary Detour Bridge General Notes and Details
21610 Temporary Detour Bridge Details -Timber Pile Foundations
21620 Temporary Detour Bridge Details -Steel H Pile Foundations
21630 Temporary Detour Bridge Details -Steel Pipe Pile Foundations

POST-TENSION DETAILS

21801 Post-Tensioning Vertical Profiles
21802 Post-Tensioning Anchorage Protection
21803 Post-Tensioning Anchorage and Grouting Details

FENDER SYSTEM DETAILS

21900 Fender System- Polymeric Piles
21930 Fender System -Prestressed Concrete Piles

REVISIONS

Index No	Sheet No	Description
Abbreviations and Symbols		
1		Added PPP for Polypropylene pipe. Added CJP for Complete Joint Penetration weld. Added LCD for Longitudinal Channelizing Device.
Drainage		
199	1	Removed reference to deleted "Index 102" from the STANDARD CRITERIA table.
201	2	Added to the end of leader note in EYEBOLT AND CHAIN FOR LOCKING GRATES TO INLETS detail "or Precaster QCP Approved Connector".
	5	RECTANGULAR SEGMENT WITH PIPE OPENING AT CORNER, Note 1 revised to say "1. Submit Shop Drawings of corner openings for approval by the engineer of record."
211	2	Clarified lapping of vertical legs in the back wall of the Precast/WWR inlet option.
	3	Added 4 1/2" bend to Bar 4E.
	4	Added 4 1/2" bend to Bar 4E and changed length in BILL OF REINFORCING STEEL table. Clarified lapping of vertical legs in the back wall of the Precast/WWR inlet option.
261	2	Corrected font mismatch.
272	6	GENERAL NOTES, Note 2 "...pipe (PVC) side drain.." should be "...pipe (PVC) and polypropylene pipe (PPP) for cross drain.."
273	7	GENERAL NOTES, Note 2 "...pipe (PVC) side drain.." should be "...pipe (PVC) and polypropylene pipe (PPP) for side drain.."
289	7	Clarified 2'-0" additional length in SECTION A-A and SECTION B-B for Payment of Type II Connection.
Curbs, Concrete Pavement and Sidewalks		
304	6	Removed the 2' Level Landing from PICTORIAL VIEW A in upper lefthand corner of sheet.
307	1	Deleted GENERAL NOTE 10.
Traffic Railings		
400	13	Deleted "Guardrail Transition Cost" note from the ELEVATION view detail.
	17	Revised Note 1 to better clarify the criteria associated with implementing PEDESTRIAN SAFETY TREATMENTS, Deleted cost information note (Note 3). Changed "Pedestrian Ways" to "Sidewalks". Changed "Bikeways" to "Shared Use Paths".
	18	Revised "See Note 1" to "See PEDESTRIAN SAFETY TREATMENTS " on PLAN view detail. Deleted Note 1, renamed Note 2 to Note 1 and renamed Note 3 to Note 2. Revised the renumbered Note 2 for clarity. Deleted dimensions based on proprietary products for SECTION BB and SECTION CC.
	22	Revised the "Class 1 " concrete label to read "Class NS" concrete on SECTION detail.
	23	Changed "Pedestrian Ways" to "Sidewalks". Changed "Bikeways" to "Shared Use Paths".
	26	Deleted last sentence from Note 1 of the LATERAL PLACEMENT ON SLOPES table.
414	1	Corrected Specification Section from "6.8" to "105" in FABRICATION NOTES, added "ALTERNATE DESIGN" notes.

Index No	Sheet No	Description
415	2 thru 7	Revised Dot pattern note within sheet legend
	2	Deleted star note from Legend, and changed ALIGNMENT AND LENGTH OF NEED notes to state "bolts or stakes. See sheet 3 through 6...".
	3	Changed "Design Speed" to "Work Zone Speed" for Length of Advancement table.
	4	Changed "Near Lane Line Or Near Traffic Lane" to read "Edge Of Travel Way". Broke barrier system with line to illustrate actual length.
	5 & 6	Changed "Traffic Lane" to "Travel Way".
	7	Added note 4, and flipped "Redirective Option" with "Temporary"
420	2	Corrected 10 3/4" dimension at top of railing in SECTION A-A.
470	1	Renamed "Pedestrian Safety Pipe Rail" to "Pedestrian Safety Treatments". Removed "The Pedestrian Safety Pipe Rail," from the "PAYMENT: " note.
General		
514	1	Revised GENERAL NOTES, Notes 1 and 3; also revised symbol notes for calirity.
	2	Revised symbol to match Sheet 1.
515	1	Added missing Return Radius Points to SKETCH ILLUSTRATING DEFINITIONS plan view.
	2, 3 & 4	Deleted text and associated leader note "4' Min., May be reduced to 3' Min. in restricted conditions when approved by the Engineer." and replaced with "4' Min."
	5	Changed "Edge of Pavt" to "Edge of Travel Way". Changed "Rdwy. Pavt." to "Travel Way". Added Return Radius Points on PLAN views. Added notes for Intersections. Renamed "LONGITUDINAL SECTION" to "DRAINAGE SECTION". Added "TURNOUT" to "PROFILE AND END VIEW" title.
	6	Changed "roadway pavement" to "travel way pavement thickness".
	7	Deleted text "4' Std.; 3' Min." replaced with "4' Min." Changed "Roadway Pavt." to "Travel Way".
516	1	Changed "Edge of Pavt." to "Edge of Travel Way".
Traffic Control Through Work Zones		
600	2	Added a sentence to end of SIGHT DISTANCE note in reference to "Construction equipment".
	3	Added "107/2004 or " to HIGH-VISIBILITY SAFETY APPAREL.
	4	Deleted the flashing light and flag from the ONE LANE ROAD AHEAD signs.
	6	Added note No. 2 under GENERAL NOTES. Changed note No. 7 under POST MOUNTED SIGN NOTES, from "3 ft^2 " to "5 ft^2" and removed "for single post... post mounting".
	11	Added to TEMPORARY LANE SEPARATOR notes. Revised BUSINESS ENTRANCE SIGN notes and deleted note No. 5.
	12	Added Longitudinal Channelizing Device (LCD). Added note 11 and note 12 to the GENERAL NOTES.
602	1	Added " * Midway between signs" under the DISTANCE BETWEEN SIGNS table.
615	1	Corrected merging traffic sign direction.
616	3	Changed "significant right turning" to "significant left turning" in note No. 1.

Index No	Sheet No	Description
619	1	Added New Note 2, Notes 3, 4, 5 and 8 revised. Revised detail for Work on Shoulder and Work Within Travel Lane.
	2	Deleted detail for Work Within Travel Lane, Outside or Inside Lane. Revised detail for Work Within Travel Lane, Center Lane and detail for Work Within Travel Lane.
642	1	Deleted "6" Min., 4' Std." and replaced with "See Index 415". Changed 1:20 to 1:15 for barrier system transition angle.
651	1 & 2	Changed 1:20 to 1:15 for barrier system transition angle.
660	1	Added Pedestrian LCD to SYMBOLS and MID-BLOCK SIDEWALK CLOSURE WITH TEMPORARY WALKWAY.
Roadside Safety		
700	2	GENERAL NOTES, Note 1 now begins "When shielding an object and sidewalks..." Note 2, Updated reference to the Utility Accommodation Manual.
Fencing and Pedestrian Railings		
801	1	Added to note No. 2 and added Type IIB to note No. 11.
852	1	Changed size of Post "A" and Post "B" in TABLE 1 - RAILING MEMBERS.
	3	Changed Top Rail overhang to 1 5/8" in DETAIL "J".
	4	Changed Base Plate post spacing in SECTION G-G.
	8	Clarified intent of 3' Min. dimension for Case I.
862	4	Corrected Base Plate post spacing edge dimensions in SECTION G-G.
	8	Clarified intent of 3' Min. dimension for Case I.
870	5	Clarified intent of 3' Min. Dimension for TYPICAL SECTION ON CONCRETE SIDEWALK.
880	5	Clarified intent of 3' Min. Dimension for TYPICAL SECTION ON CONCRETE SIDEWALK.
Sound Barrier Systems		
5200	1	Removed Note K; Changed Note E (title only), H, and J.
	2	Clarified Note 1.
	3	Changed Min. dimension of Top Panel; other minor clarification changes to notes and call-outs.
	4 thru 13	Completely reorganized details; clarified labels; removed unnecessary information and redundant information; drainage hole spacing redefined; eliminated C-I-P collar details where possible; developed new C-I-P collar for 90 degree corner typical piles.
	15	Modified Bar Bending Details to match changes on Sheets 4 thru 13; Removed redundant notes; made Pile/Post Elevation and View A-A generic.
	16	Added Table Note.
Wall Systems		
6040	1, 3 & 4	Clarified orientations of tongue and groove for fabrication of Types "B" and Types "C" with new designations of Types "B1", "B2", "C1" and "C2".
6110	2	Changed Concrete (Precast Coping Only) and (Precast Barrier & Coping) quantities in ESTIMATED QUANTITIES table.
	3	Added Note 9 to REINFORCING STEEL NOTES. Added missing Bar 5S or 8S1 in TYPICAL SECTION. Changed Concrete quantity in ESTIMATED QUANTITIES table.

REVISIONS

Index No	Sheet No	Description
6120	1	Corrected spacing of Bars 5B2 in PARTIAL PLAN VIEW.
	2	Changed Concrete (Precast Coping), Reinforcing Steel (Precast Coping) and (C-I-P Raised Sidewalk) quantities in ESTIMATED QUANTITIES table. Changed edge spacing of Bars 5B1, 5B2 and 1" Dowels in TYPICAL SECTION.
	3	Changed vertical leg dimension on Bar 5A to 1'-10", horizontal leg dimension for Precast Coping to 3'-11" and total lengths of Bars 5A; and corrected size of Bars 4C in REINFORCING STEEL BENDING DIAGRAM. Changed Concrete and Reinforcing Steel (Typical) quantities in ESTIMATED QUANTITIES table. Changed edge spacing of Bars 5B2 and 1" Dowels in TYPICAL SECTION. Changed REINFORCING STEEL NOTES 3, 4 & 7.
Signing and Markings		
11200	2	Corrected Elevation view of BASE CONNECTION drawing for bolt detail.
11310	2	Changed base of upright-to-gusset plate weld.
11320	2	Changed base of upright-to-gusset plate weld.
11860	4	Changed YIELD sign detail and added ** note. Revised * note for BRACKET DETAIL.
11870	1 & 2	Made minor note clarifications.
11871		New Index
17347	1	Added ** note to Lane Width Sharrow table.
	2	Changed "SKIP" to "DOTTED". in sheets 2, 3, and 4.
17349	1	Revised bottom CASE I details for signs to read correctly.
17355	10	Changed the dimensions to BUSINESS ENTRANCE SIGN.
Roadway Lighting		
17500	1	Added #6 Copper Ground Wire to METAL POLE WIRING DETAIL.
	3	Changed note No. 7 in reference to joint sealer.
17502	6	Changed note No. 7 in reference to joint sealer.
Traffic Signal and Equipment		
17700	1	Added a note to the FIBER OPTIC BOX.
17745	2	Deleted plate on detail SECTION EE and changed note from "Full Penetration" to "Partial Penetration".
17784	2	Changed "figure 2B-18" to "figure 2B-26" in note No. 1.
Intelligent Transportation Systems (ITS)		
18204	1	Index deleted, replaced by Index 17700.
Prestressed Concrete Beams		
20010	1	Changed Notes 4 and 5 to clarify applicability of notes; Changed Note 5 to refer to Specifications; Changed Note 8 to remove generic details for Safety Sleeve and require following shop drawings.
	2	Removed obsolete references to Bars 4L.
20036	1	Changed call out of "Safety Sleeve with Cap" to "Safety Line Anchorage Device" and modified detail to remove dimensions showing generic representation in END VIEW only.
20045	1	Changed call out of "Safety Sleeve with Cap" to "Safety Line Anchorage Device" and modified detail to remove dimensions showing generic representation in END VIEW only.
20054	1	Changed call out of "Safety Sleeve with Cap" to "Safety Line Anchorage Device" and modified detail to remove dimensions showing generic representation in END VIEW only.
20063	1	Changed call out of "Safety Sleeve with Cap" to "Safety Line Anchorage Device" and modified detail to remove dimensions showing generic representation in END VIEW only.
20072	1	Changed call out of "Safety Sleeve with Cap" to "Safety Line Anchorage Device" and modified detail to remove dimensions showing generic representation in END VIEW only.
20078	1	Changed call out of "Safety Sleeve with Cap" to "Safety Line Anchorage Device" and modified detail to remove dimensions showing generic representation in END VIEW only.
20084	1	Changed call out of "Safety Sleeve with Cap" to "Safety Line Anchorage Device" and modified detail to remove dimensions showing generic representation in END VIEW only.
20096	1	Changed call out of "Safety Sleeve with Cap" to "Safety Line Anchorage Device" and modified detail to remove dimensions showing generic representation in END VIEW only.
20210	2	Changed Note 5 to remove generic details for Safety Sleeve and require following shop drawings.
20248	1	Changed call out of "Safety Sleeve with Cap" to "Safety Line Anchorage Device" and modified detail to remove dimensions showing generic representation in END VIEW only.
20254	1	Changed call out of "Safety Sleeve with Cap" to "Safety Line Anchorage Device" and modified detail to remove dimensions showing generic representation in END VIEW only.
20263	1	Changed call out of "Safety Sleeve with Cap" to "Safety Line Anchorage Device" and modified detail to remove dimensions showing generic representation in END VIEW only.
20272	1	Changed call out of "Safety Sleeve with Cap" to "Safety Line Anchorage Device" and modified detail to remove dimensions showing generic representation in END VIEW only.
Square and Round Concrete Piles		
20602	1	Clarified applicability of 3/4" vent hole and changed location; Changed distance of EDC at tip from D to 2D.
Approach Slabs		
20900	1	Added 2" (Typ.) cover to sides in SECTION A-A.
20910	1	Added 2" (Typ.) cover to sides in SECTION A-A.
Structures Access and Lighting		
21210	2	Changed Note 3 to exclude the use of galvanized steel pull boxes in extremely aggressive environments.

Abbreviation	Meaning
°C	Celsius (degree)
µ	Micro
2-L	Two-Lane
2L1W	Two-Lane One-Way
2L2W	Two-Lane Two-Way
A	Area or Amperes
AAA	American Automobile Association
AADT	Annual Average Daily Traffic
AASHO	American Association Of State Highway Officials
AASHTO	American Association Of State Highway And Transportation Officials
ABC	Asphalt Base Course
Abd.	Abandoned
ABS	Acrylonitrite-Butadiene-Styrene Pipe
AC or Asph. Conc.	Asphaltic Concrete
AC, Ac.	Acre
Accel.	Acceleration
ACI	American Concrete Institute
Act.	Actuated
ADA	Americans With Disabilities Act, The
Adh.	Adhesive
Adj.	Adjust
ADT	Average Daily Traffic
AFAD	Automated Flagger Assistance Device
Agg.	Aggregate
Ah.	Ahead
AISC	American Institute Of Steel Construction
AISI	American Iron and Steel Institute
Alt.	Alternate
Alum., Al.	Aluminum
AM	12:00 Midnight Until 11:59 Noon
ANSI	American National Standards Institute
AOS	Apparent Opening Size
APL	Approved Products List
Appl.	Applied, Application
Apprh.	Approach
Approx.	Approximate
ARTBA	American Road & Transportation Builders Association
Artf.	Artificial
Asph.	Asphalt
Assem.	Assembly
Assn.	Association
Assoc.	Associate, Association
ASTM	American Society For Testing And Materials
ATPB	Asphalt Treated Permeable Base
Attn.	Attention
Attnuatr.	Attenuator
Aux. or Auxil.	Auxiliary
Ave.	Avenue
AWG	American Wire Gauge
AWS	American Welding Society
Az	Azimuth
B to B	Back to Back
B/C, B.C.	Back Of Curb
Basc.	Bascule
BC	Bottle Cap or Bolt Circle
BCCMP	Bituminous Coated Corrugated Metal Pipe Culvert
BCPA	Bituminous Coated Pipe Arch Culvert
BCPCMP	Bituminous Coated And Paved Corrugated Metal Pipe Culvert
BCPPA	Bituminous Coated And Paved Pipe Arch Culvert
BCT	Breakaway Cable Terminal
BCWE	Base Clearance Water Elevation
Bd. or Bnd.	Bond or Bonded
Bdr.	Border
BE	Buried Electric
Beg.	Begin
Bit.	Bituminous
Bk.	Back
BL or ℄	Base Line
BLC	Base Line Control
Bldg.	Building

Abbreviation	Meaning
Blkhd.	Bulkhead
BLON	Begin Length Of Need
Blvd.	Boulevard
BM	Bench Mark
Bndry.	Boundary
BO	Basin Outlet
BOS	Beginning Of Survey
Bot.	Bottom
BP	Borrow Pit
Bq.	Becquerel
Br.	Bridge
Brg.	Bearing
Brkwy.	Breakaway
BT	Buried Telephone Cable or Duct
Btfly.	Butterfly
Btwn., B/W	Between
BW	Barbed Wire, Bottom Width or Both Ways
C	Cantilever Length, Cut, Colorless, Coulomb or Cycle Length
C & G	Curb And Gutter
C.C.	Crash Cushion
C.I.P., C-I-P	Cast In Place
CA	Coarse Aggregate
CAP	Corrugated Aluminum Pipe
Cap.	Capacity
Caps.	Capital Letters
CASP	Corrugated Aluminized Steel Pipe
CATV	Cable Television
CB	Catch Basin
CBC	Concrete Box Culvert
CBS	Concrete Box Structure
CC, C/C or C to C	Center to Center
CCEW	Center to Center Each Way
CCTV	Closed-Circuit Television
cd	Candela
CD	Cross Drain, Cross Direction (Geotextiles)
Cem.	Cement or Cemetery
Cem'd.	Cemented
CF, C.F.	Cubic Foot
CFR	Code of Federal Regulations
CFS	Cubic Feet Per Second
Ch.	Channel
Chchg.	Channel Change
Chg.	Changeable
CI	Cast Iron
CIP	Cast Iron Pipe
circ.	Circumference
CJP	Complete Joint Penetration weld
Ckt.	Circuit
CL, C/L or ℄	Center Line
Cl. or Clear	Clearance
CM	Concrete Monument
CMB	Concrete Median Barrier
CMP	Corrugated Metal Pipe
CMPA	Corrugated Metal Pipe Arch
CO	Clean Out
Co.	County or Company
Col.	Column
Com.	Commercial or Common
COMM	Committee or By Committee
Comp.	Composite
Con.	Connect or Connection
Conc.	Concrete
Const.	Construct or Construction
Cont.	Continuation
Contr.	Contractor
Contrl.	Controller
Coord.	Coordinate
Cor.	Corner
Corr.	Corrugated
Cov.	Cover
CP	Concrete Pipe
CPE	Corrugated Polyethylene Pipe

Abbreviation	Meaning
CPT	Cone Penetration Test
CR	Control Radius or County Road
CRA	Clear Recovery Area
Crs. or Cse.	Course
CS	Curve To Spiral
CSIP	Cost Savings Initiative Proposal
CSL	Cross-hole Sonic Logging
CSP	Corrugated Steel Pipe
CT	Clear Trunk
Ctlvr.	Cantilever
CTPB	Cement Treated Permeable Base
Ctr., Ctrs.	Center
CU or Cu	Copper
Cu. Yd., CY, or C.Y.	Cubic Yard
Culv.	Culvert
Cwt.	Hundredweight
Cyl.	Cylindrical
D	Degree Of Curvature, Depth, Density, Distance, Diameter or Directional Distribution
D, Dia. or Ø	Diameter
DA	Drainage Area or Deflection Angle
DBH	Diameter At Breast Height
DBI	Ditch Bottom Inlet
Dbl.	Double
DCS	Degree Of Curvature (Spiral)
DD	Dry Density
DDHV	Directional Design Hour Traffic
Decel.	Deceleration
Deg.	Degree
Delin.	Delineators
Demobl.	Demobilization
Dept.	Department
Det.	Detour, Detection, Detectable
DFE	Design Flood Elevation
DGN or Dgn.	Design
DHV	Design Hourly Volume
DHW	Design High Water
DHWE	Design High Water Elevation
DI	Drop Inlet
Dim.	Dimension
Disp.	Disposal
Dist.	Distance
DLS	District Location Surveyor
DMM	Domestic Mail Manual
DOT	Department Of Transportation
DPI or D.P.I.	Ditch Point Intersection
DR	Design Review
Dr.	Drain, Drive
Driv.	Driven
Drwy.	Driveway
DS	Design Speed
DSL	Design Service Life
DT	Ditch
DTOE	District Traffic Operations Engineer
Dwg.	Drawing
E	East or External Distance
e	Superelevation rate
E to E	End to End
E.P. or EOP	Edge Of Pavement
EA or Ea.	Each
EB	Eastbound
ED	Each Day
EIA	Electronic Industries Alliance
El. or Elev.	Elevation
Elast.	Elastomeric
Elec.	Electric
Ellip.	Elliptical
Embed.	Embedment
Embk.	Embankment
Emul.	Emulsified
Encl.	Enclosure

C:\d\projects\standards\roadway\00001\00001.dgn rd960rh 1:50:54 PM 6/28/2012

Abbreviation	Meaning
Engr.	Engineer
EOS	End Of Survey or Equivalent Opening Size
EPDM	Ethylene Propylene Diene Monomer
Eq.	Equation or Equal
Equip.	Equipment
Esmt.	Easement
Est.	Establish or Established
Est. or Estm.	Estimate
Etc. or etc.	Et Cetera (And So Forth)
ETP	Electronic Tough Pitch
EW	Endwall
Ex.	Except, Example
Exc. or Excav.	Excavation
Exist.	Existing
Exp.	Expansion
Ext.	Extension
Exwy.	Expressway
F	Fill, Farad
F & I	Furnish & Install
F or Final	Final Quantity
F to F	Face to Face
F.L., FL or $\underline{\text{F}}$	Flow Line
F.S.	Florida Statutes
FA	Federal Aid or Fine Aggregate
FAC	Florida Administrative Code
FAP	Federal Aid Project
FBT	Florida Bulb Tee
FC	Friction Course
FD	French Drain
Fdn.	Foundation
FDOT	Florida Department Of Transportation
FE	Floor Elevation
Fed.	Federal
Fert.	Fertilizer
FES	Flared End Section
FETS	Flared End Terminal Section
FH	Fire Hydrant
FHWA	Federal Highway Administration
FIB	Florida I Beam
Fig.	Figure
Fin.	Finish
FL, Fl. or Fla.	Florida
Flex.	Flexible
FNQ	Fuse (Type Slow Burn)
FOC	Fiber Optics Cable
FPID	Financial Project Identification Number
FPM or fpm	Feet Per Minute
FPS or fps	Feet Per Second
FR or Fr.	Frame
Frang.	Frangible
Freq.	Frequency
FS	Far Side
Ft.	Foot or Feet
FTB	Floating Turbidity Barrier
FTBA	Florida Transportation Builder Association
FTP	Florida Traffic Plans
Furn.	Furnish
G	Giga, Gauss or Shear Modulus
g	Gram or Gravity
Ga.	Gauge or Gage
Ga. or Gal.	Gallon
Galv.	Galvanized
Gar.	Garage
GD	Gutter Drain
GFI	Ground Fault Interrupter
GIP	Galvanized Iron Pipe
GM	Gas Main
GP	Grade Point
Gr.	Grade, Guardrail or Grate
Gr. or Gro.	Gross
Gr. Wt. or gr. wt.	Gross Weight
GRC	Galvanized Rigid Steel Conduit

Abbreviation	Meaning
Grd.	Ground
GRI	Geosynthetic Research Institute
gross km	Gross Kilometer
Gttr.	Gutter
h	Hecto
H	Henry
H.S., HS	High Strength
ha	Hectare
HAR	Highway Advisory Radio
HB	Hay Bales
HC	Horizontal Clearance
HD	High Density or Heavy Duty
Hd.	Head
HDPE	High Density Polyethylene
Hdwl.	Headwall
HH	Heavy Hex
Hndrl.	Handrail
HOA	Hand/Off/Automatic
Horiz. or Hor.	Horizontal
HOT	High Occupancy Tolls
HOV	High Occupancy Vehicle
HP	High Pressure or Horsepower
Hr.	Hour
Hse.	House
HSHV	High Strength Horizontal Vertical
Ht.	Height
HW or H.W.	High Water or Hot Water
Hwy.	Highway
Hyd.	Hydraulic
Hz	Hertz
I	External Angle (Delta), Interstate
ID, I.D.	Inside Diameter or Identification
IES	Illuminating Engineering Society
IMC	Intermediate Metal Conduit
in.	Inch(es)
Inc.	Incorporated or Including
Incl. or Inc.	Included
Ind.	Industry or Industrial
Install.	Installed
Int.	Interior
Intchg. or Ichg.	Interchange
Inter.	Intermediate
Inv.	Invert
IP	Iron Pipe
IR	Iron Rod
Isect.	Intersection
Isl.	Island
ITE	Institute Of Transportation Engineers
ITS	Intelligent Transportation Systems
J	Joule
JB	Junction Box
Jct.	Junction
Jt.	Joint
K	Design Hour Factor
K	Kelvin
k	Kilo (prefix)
kg	Kilogram
kg/m	Kilogram Per Meter
kg/m³	Kilogram Per Cubic Meter
kg/m²	Kilogram Per Square Meter
Kilo	One Thousand
Kip	1000 Pounds
km	Kilometer
km/h	Kilometer Per Hour
kN	Kilonewton
kn	Knot
kPa	Kilopascal
ksi	Kips Per Square Inch
kV	Kilovolt
kVA	Kilovolt Ampere
kWh	Kilowatt-hour

Abbreviation	Meaning
L	Length, Length Of Curve, Liter, Left or Taper Length, Buffer Length or Taper Length plus Buffer Space
L/W	Lightweight
LA or L/A	Limited Access
Lat.	Lateral or Latitude
lb	Pound(s)
lb/sy	Pounds Per Square Yard
lbf	Pound force
LBR	Lime rock Bearing Ratio
LC	Long Chord
LCD	Longitudinal Channelizing Device
LEO	Law Enforcement With Flashing Lights And Radar
LF	Linear Foot (Feet)
LFD	Load Factor Design
Lgth.	Length
Lin.	Linear
LM	Lane Mile
lm	Lumen
Lmrk.	Lime rock
Loc.	Location
Long.	Longitude
LOS	Limit Of Clear Sight
LRFD	Load Resistance Factor Design
LRS	Low-Relaxation
LS	Length Of Spiral
LS	Lump Sum
LT	Left Turn
Lt.	Left
Ltd.	Lighted or Limited
LU, Lum.	Luminaire
lx	Lux
M	Mass, Middle Ordinate Length or Mega
m	Meter or Milli
m²	Meter Square
m/s	Meters Per Second
m³	Meter Cubed or Cubic Meter
m³/m	Meter Cubed Per Meter
Mach.	Machine
Maint.	Maintenance
MAS	Motorist Awareness System
MASH	Manual for Assessing Safety Hardware (AASHTO)
Matl.	Material
Max.	Maximum
MB	Median Barrier
MBM	Thousand (Feet) Board Measure
MD	Machine Direction (Geotextiles)
Med.	Median
Mega	One Million
Memb.	Member
MES	Mitered End Section
Mess.	Message
Mfg.	Manufactured or Manufacturer
MG	1000 Gallons
MH, M.H.	Manhole or Mounting Height
MHW	Mean High Water
Mi.	Mile
Micro	One-Millionth
Mid.	Middle
Mil	One-Thousandth Of An Inch
Mil.	Military
Milli	One-Thousandth
Min.	Minimum or Minute
Misc.	Miscellaneous
mL	Milliliter
MLW	Mean Low Water
mm	Millimeter
Mobl.	Mobilization
Mod.	Modify or Modified
Mol	Mole

6/28/2012 1:50:55 PM rd960rh C:\d\projects\standards\roadway\00001\00001.dgn

Abbreviation	Meaning
Mon.	Monument
MOT	Maintenance Of Traffic
MOTC	Maintenance Of Traffic Committee
MP	Mile Post
MPa	Megapascal
MPH or mph	Miles Per Hour
MSL	Mean Sea Level
MSTCSD	Minimum Specifications For Traffic Control Signal Devices
Mtd.	Mounted
MUTCD	Manual On Uniform Traffic Control Device
MUTS	Manual On Uniform Traffic Studies
N	North or Newton
N & C	Nail & Cap
N & D	Nail & Disk
N.P.	Non Plastic
N/m	Newtons Per Meter
N/m^3	Newtons Per Cubic Meter
N/m^2	Newtons Per Square Meter
N/mm^2	Newtons Per Square Millimeter
NA or N/A	Not Available or Not Applicable
NAVD	National American Vertical Datum
NB	Northbound
NC	National Coarse or Normal Crown
NCHRP	National Cooperative Highway Research Program
NDCBU	Neighborhood Delivery And Collection Box Unit
NE	Northeast
NEMA	National Electrical Manufacturers Association
net km	Net Kilometer
NGS	National Geodetic Survey
NGVD	National Geodetic Vertical Datum of 1929
NHS	National Highway System
NHW	Normal High Water
NIC	Not In Contract
NJ	New Jersey
NM	Net Mile
Nm	Newton Meter
No.	Number
Nom.	Nominal
Norm.	Normal
NPS	Nominal Pipe Size
NPT	National Pipe Thread
NRCP	Non-Reinforced Concrete Pipe
NS	Non Stress, Not Suitable or Near Side
NT, N&T	Non Traffic, Nail & Tin
NTS	Not To Scale
NW	Northwest
O to O, o to o or O.O.	Out to Out
O.B.G.	Optional Base Group
OA	Overall
OC or O.C.	On Center
OD or O.D.	Outside Diameter
OE	Overhead Electric
OH, OHD or Ohd.	Overhead
Opass	Overpass
Opt.	Option, Optional or Optically
OT	Overhead Telephone
Oz.	Ounce
P	Passenger Car & Light Delivery Truck
P or Plan	Plan Quantity
Pa	Pascal
Pa•s	Pascal Second
Par.	Parallel
Part.	Participation or Partition
Pavt.	Pavement
PC	Point Of Curvature
PCBC	Precast Concrete Box Culvert
PCC	Point Of Compound Curvature or Plain Cement Concrete
PCE	Permanent Construction Easement
PCF, pcf	Pounds per Cubic Foot
PCMS	Portable Changeable Message Sign
PE	Professional Engineer

Abbreviation	Meaning
Ped	Pedestrian or Pedestal
Pen.	Penetration
PG	Profile Grade
PGL	Profile Grade Line
pH	Measure Of Acidity or Alkalinity
Ph.	Phase
PI	Point Of Intersection
Pkg.	Parking
Pkwy.	Parkway
PL or $\mathbb{P}$	Property Line or Plate
PM	12:00 Noon Until 11:59 Midnight
POC	Point On Curve
POST	Point On Semi-Tangent
POT	Point On Tangent
PP	Power Pole
PPB	Pier Protection Barrier
PPP	Polypropylene pipe
Pr.	Pair
PRC	Point Of Reverse Curvature
Prcst.	Precast
Prest.	Prestressed
PRM	Permanent Reference Monument
Prob.	Probability
Prod.	Product, Production, Producer or Produced
Prog.	Program or Progression
Proj.	Project or Projection
Prop.	Proposed
Prov.	Provisions
PRS	Portable Regulatory Sign
PS & E	Plans, Specifications And Estimates
PSF or psf	Pounds Per Square Foot
PSI or psi	Pounds Per Square Inch
PSU	Prestressed Slab Unit
PT	Point Of Tangency or Pressure Treated
PTFE	Polytetrafluoroethylene
PVC	Polyvinyl Chloride
PW	Pressure Water
Q	Peak Discharge or Flow Volume
QPL	Qualified Products List
R or Rad.	Radius
R or Rng.	Range
R, Rt.	Right
r/s	Revolution Per Second
R/W, ROW	Right Of Way
rad	Radian
rad/s	Radian Per Second
RBAC	Rock Base Asphaltic Concrete
RBST	Rock Base Surface Treatment
RC	Reverse Crown
RCP	Reinforced Concrete Pipe
RCPA	Reinforced Concrete Pipe Arch
Rd.	Road or Round
Rdsd.	Roadside
Rdwy.	Roadway
Rec.	Recovery
Rect.	Reticuline or Rectangular
Ref.	Reference
Refl.	Reflective
Reg.	Region, Regular, Registered or Regulation
Reinf.	Reinforced or Reinforcing
Rejuv.	Rejuvenation
Reloc.	Relocated
Rem.	Removal
Repl.	Replace
Req. or Reqd.	Required
Res.	Residence or Residential
RGS	Rigid Galvanized Steel
RHW	Insulation (Moisture & Heat Resistant Rubber)
RM	Reference Monument
RP	Reference Point
RPM	Raised Reflective Pavement Markers
rpm or r/min	Revolution Per Minute

Abbreviation	Meaning
RR	Railroad
RSDU	Radar Speed Display Unit
Rsf.	Resurface
RU	Rack Unit
RX	Receive
S or s	Speed, South, Siemens, Or Second
SAHM	Sand-Asphalt Hot Mix
San.	Sanitary
SB	Southbound
SBAC	Shell Base Asphaltic Concrete
SBRM	Sand Bituminous Road Mix
SBST	Shell Base Surface Treatment
SC	Seal Coat
SC	Spiral To Curve
Sch.	Schedule
SCST	Sand-Clay Surface Treatment
SD	Side Drain, Storm Drain
SD	Storm Drain
SE	Southeast
Sec.	Second
Sect.	Section
Sed.	Sediment
Sep.	Separator
Seq.	Sequential
Serv.	Service
SF	Adjustment Factor In Percent, Silt Fence
SG	Specific Gravity
SG, Subgr.	Subgrade
Sh. or Sht.	Sheet
Shldr.	Shoulder
SHW	Seasonal High Water
SIP	Stay In Place
SLEO	Speed and Law Enforcement Officer
SP	Superpave
Spa., Spcg. or Sp.	Space(ing)(s)
Spec.	Specification
SPT	Standard Penetration Test
sq	Square
Sq. Ft., SF, or S.F.	Square Foot
sq. in.	Square Inch
Sq. Yd., SY or S.Y.	Square Yard
SR or S.R.	State Road
SRAP	Spiral Rib Aluminum Pipe
SRASP	Spiral Rib Aluminized Steel Pipe
SRCP	Steel Reinforced Concrete Pipe
SRD	State Road Department
SRSP	Spiral Rib Steel Pipe
SS	Sanitary Sewer, Stainless Steel
SSMD	Solid State Modular Design
ST	Surface Treatment or Spiral To Tangent
St. or ST.	Street
Sta.	Station
Stab.	Stability or Stabilization
STB	Staked Turbidity Barrier
Std.	Standard
Stg.	Strong
Stge.	Storage
Stl.	Steel
Str.	Structure
Sty.	Story
SU	Single Unit Trucks
Sub. or Subs.	Subsoil
Sub. or Subst.	Substitute
Suppts.	Supports
Sur.	Survey
Surf.	Surface
Sv	Sievert
SW	Southwest
SW or Swk.	Sidewalk
Sym.	Symmetrical
Sys. or Syst.	System
t	Metric Ton

C:\d*projects\standards\roadway\00001\00001.dgn
rd960rh
1:50:56 PM
6/28/2012

LAST REVISION	REVISION	DESCRIPTION:
07/01/12		

FDOT DESIGN STANDARDS
2013

STANDARD ABBREVIATIONS

INDEX NO. 001

SHEET NO. 3

Abbreviation	Meaning
T	Tangent, Length Of Curve, Percent Trucks, Tesla
T, TWP or Twp.	Township
tan.	Tangent
TBM	Temporary Bench Mark
TC	Tangent To Curve
TCB	Temporary Concrete Barrier
TCE	Temporary Construction Easement
TCP	Terra Cotta Pipe
TCP	Traffic Control Plan(s)
TCZ	Traffic Control Zone
TDLC	Transportation Design For Livable Communities
Tel.	Telephone
Temp.	Temperature or Temporary
Theo.	Theoretical
THRMPLSTC	Thermoplastic
THW or THWN	Insulation (Flame Retardant, Moisture And Heat Resistant Thermoplastic)
Tk	Truck
Tk or Thick.	Thickness
TMA	Truck/Trailer Mounted Attenuator
Tn.	Ton
Traf.	Traffic
Trans.	Transition, Transverse, Translate or Transportation
Treat.	Treatment
TS	Tangent To Spiral
TSC	Length Of Tangent (Spiral Curve)
TTC	Temporary Traffic Control
TVSS	Transient Voltage Surge Suppression
TX	Transmit
Typ.	Typical
UG	Underground
UL	Underwriters Laboratories
Ult.	Ultimate
Ultd.	Unlimited
Unddr.	Underdrain(s)
Undrdwy.	Under roadway
unld.	Unloaded
Untr.	Untreated
Upass.	Underpass
UPS	Uninterruptible Power Supply
USC & GS	US Coast and Geodetic Survey (now National Geodetic Survey)
USGS	US Geological Survey
USPS	United States Postal Service
Util.	Utilities
UV	Ultraviolet
V	Volt, Velocity, Volume or Hourly Volume
Var.	Varies, Variable or Variance
VC	Vertical Curve
VCP	Vitrified Clay Pipe
Veh.	Vehicle
Vert.	Vertical
VF	Vertical Foot
Vh	Verified Horizontal Location
Vol.	Volume
VP	Vertical Panel
VPD or Vpd.	Vehicles Per Day
VPH or Vph.	Vehicles Per Hour
VPHPL or Vphpl.	Vehicles Per Hour Per Lane
VRMS	Volts Root Mean Square
Vv	Verified Vertical Elevation
Vvh	Verified Vertical Elevation And Horizontal Location
VW	Variable Width
W	Width, Wide, West or Watt
W.P.I.	Work Program Item
W/C	Water-Cement Ratio
WB	Westbound
Wb.	Weber
WB40	Semi Trailer, Intermediate
WB50	Semi Trailer, Large
WB62	Semi Trailer, Interstate
WB67D	Semi Trailer, Tandem
WM	Water Main
WT	Water Table Or Weight
WWF	Welded Wire Fabric
WWR	Welded Wire Reinforcing
X	Coordinate Value (East-West Direction) or Extra
X Rd.	Cross Road
Xing.	Crossing
Xsec.	Cross Section
Y	Coordinate Value (North-South Direction)
Yd.	Yard
Yr.	Year
Ω	Ohm

6/28/2012 1:50:57 PM rd960rh C:\d\projects\standards\roadway\00001\00001.dgn

STANDARD SYMBOLS FOR KEY MAP

- Highway With Full Control of Access
- Highway With Frontage Roads
- Highway Interchange
- Proposed Controlled Access Highway
- Divided Highway
- Hard Surfaced Road
- Soil, Gravel Or Shell Surfaced Road
- Graded And Drained Road
- Unimproved Road
- Primitive Road
- P — Private Road
- Streets In Inset Or Delimited Areas
- Extension Of Local Roads Within Cities
- FAI — Federal Aid Interstate Highway
- FAU — Federal Aid Urban Highway
- FAP — Federal Aid Primary Highway
- FAS — Federal Aid Secondary Highway
- NFR — National Forest Road
- SFR — State Forest Road
- SPR — State Park Road
- Interstate Highway
- US Numbered Highway
- State Highway
- County Road

- Railroad
- Double Track Railroad
- Abandoned Railroad
- Railroad Station
- Grade Crossing
- Railroad Above
- Railroad Below
- Military Field
- Commercial Or Municipal Airport
- Landing Area Or Strip
- Runways

- FF — Free Ferry
- TF — Toll Ferry
- Canal Or Drainage Ditch
- Intracoastal Waterway
- Narrow Stream
- Wide Stream
- Dam
- Dam Or Spillway With Lock
- Dam With Road
- Flood Control Structure
- Lake, Reservoir Or Pond
- Intermittent Pond
- M — Meandered Lake
- Marsh Or Swamp
- Mangroves
- Levee Or Dike
- Levee Or Dike With Road
- Highway Bridge
- 3 — Small Bridges Closely Spaced
- Drawbridge
- Highway Grade Separation
- Tunnel
- State Boundary Line
- County Boundary Line
- Civil Township Boundary
- Extended Township Line
- Land Grant Line
- Land Section Line
- State Survey Section Line
- Survey By Others
- Location Of Inset Boundary Within Map
- Military Reservation Boundary
- College Or University Boundary
- Corporate Limits
- Delimited Area, Population Est.
- Reservation, Forest Or Park Boundary
  Wildlife Refuge Boundary

- Residential Area Under Development
- Lighthouse
- State Capital
- County Seat
- Other City Or Village
- Seminole Indian Village
- Welcome Station
- WP — Wayside Park Or Small Park
- WP — Park With Boat Ramp
- B — Boat Ramp
- Museum
- Recreational Area Or Historic Site
- Scenic Site
- Post Office
- School
- Church
- Cemetery
- Church And Cemetery
- Hospital, Health Center Or Rest Home
- Toll House, Port Of Entry Or Weight Station
- Fair Grounds, Race Course Or Rodeo Arena
- Mine Or Strip Mine
- Governmental Research Station

- Agricultural Inspection Station
- FM — Farmers Market
- Game Preserve
- Game Checking Station
- Bird Sanctuary
- Fire Control Headquarters
- Lookout Tower
- FS — Fire Station
- Patrol Or Police Station
- Correctional Institution Or Road Camp
- DOT — Department of Transportation Facility
- Coast Guard Station
- A — Armory
- J — Junkyard
- F — Sanitary Fill
- S — Sewage Disposal Plant
- I — Incinerator
- Power Plant
- Power Substation
- Communications Facility
- Locked Gate Or Fence
- WOOD — Triangulation Station

GENERAL NOTE

1. Symbols on this Index are intended for use on all Roadway, Signing And Marking, Signalization, and Lighting projects. For work zone traffic control symbols refer to Index 600. When additional or similar symbols are used, legends or notations may be required for clarity.

C:\d\projects\standards\roadway\00002\00002-01.dgn rd960rh 1:50:59 PM 6/28/2012

LAST REVISION	REVISION	DESCRIPTION:				
07/01/05			FDOT DESIGN STANDARDS 2013	STANDARD SYMBOLS	INDEX NO. 002	SHEET NO. 1

STANDARD SYMBOLS FOR PLAN SHEETS

GENERAL SYMBOLS

- State Line
- County Line
- Township Line
- Section Line
- City Line
- Base Or Survey Line
- Right-Of-Way
- Easement Line
- Limited Access Line
- Fence Line
- National Or State Park Or Forest
- Grant Line
- Railroad (Drainage Maps)
- Railroad (Detail Plans)
- Fence (Limited Access)
- Box Culvert
- Bridge
- Pipe Culvert-Mitered End Section
- Pipe Culvert-Straight Endwall
- Pipe Culvert-U-Type Endwall
- Pipe Culvert-Median Drain
- Pipe Culvert-Other End Treatments
- 18" SD — Storm Drain (Proposed)
- 18" SD — Storm Drain (Existing)
- Inlet
- Manhole
- Tied Longitudinal Joint
- Keyed Longitudinal Joint
- Doweled Transverse Expansion Joint
- Doweled Transverse Contraction Joint
- Transverse Contraction Joint Without Dowels
- Survey Reference Point
- ALACHUA — Triangulation Station
- B.M. NO. 112 — Bench Mark
- Point Of Intersection
- North Arrow
- TYP. TYPE PAV'T WALK — Edges Of Existing Pavement And Sidewalk
- Guardrail
- C. C. — Crash Cushion
- Piling Pier Column
- Concrete Monument
- Base Line
- Centerline
- Flow Line
- Property Line
- Δ — Delta Angle
- ± — Approximate
- Ø — Round Or Diameter

- Curb
- Curb And Gutter
- Water Well, Spring
- Levee
- MP 327 — Railroad Mile Post
- Railroad Signal With Gate
- Railroad Switch
- 12' — Gate
- Pump Island
- Storage Tank (Surface)
- Storage Tank (Underground)
- Mine Or Quarry
- B P — Borrow Pit
- Church
- S — Store
- RES — Residence
- B — Barn
- School
- Sediment Barrier
- Floating Turbidity Barrier
- Staked Turbidity Barrier
- Stream
- Shore Line
- Marsh
- Wetland Boundary (Proposed)
- Wetland Boundary (Existing)
- Hedge
- Trees
- Edge Of Wooded Area
- Shrubbery
- Grove Or Orchard

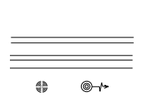

Definition Of Skew For Cross Drains And Barrels Of Conrete Box Culverts

- Concrete
- Wood
- *e* — Rate Of Superelevation

UTILITY ADJUSTMENT SYMBOLS

EXISTING	PROPOSED	
		Manhole
		Fire Hydrant
		Meter (Type)
		Valve (Type)
		Valve Box (Type)
		Valve Cover (Type)
		Vent (Type)
		Pump Station
		Sewage Pump Station
		Cleanout
		Cable TV Service Box
		Power Pole
		Telephone Pole
		Combination Pole
		Guy Wire And Anchor Pin
		Guy Pole Deadman
		Tower
		Light Pole
		Transformer

EXISTING	PROPOSED	
W - - - - 6" W - - - - -	W W W W W W 6" W W W W W W	Water Main
NPW - - - 6" NPW - - -	NPW NPW 6" NPW NPW	Non Potable Water
S - - - - 8" S - - - -	S S S S S S 8" S S S S S S	Sanitary Sewer
G - - - - 6" G - - - -	G G G G G G 6" G G G G G G	Gas
RD - - - - 4" RD - - - -	RD RD RD 4" RD RD RD	Roof Drain
PET - - - 8" PET - - -	PET PET 8" PET PET	Petroleum
STM - - - 12" STM - - -	STM STM 12" STM STM	Steam
CAS - - - 12" CAS - - -	CAS CAS 12" CAS CAS	Casing
DT - - - 4"x4" DT - - -	DT DT 4"x4" DT DT	Duct
BE - - (7.5 kV) BE - -	BE BE (7.5 kV) BE BE	Buried Electric
OE - - (7.5 kV) OE - -	OE OE (7.5 kV) OE OE	Overhead Electric
BTV - - - 3" BTV - - -	BTV BTV 3" BTV BTV	Buried Cable Television
OTV - - - 2" OTV - - -	OTV OTV 2" OTV OTV	Overhead Cable Television
BT - - - - 2" BT - - - -	BT BT BT 2" BT BT BT	Buried Telephone
OT - - - - 2" OT - - - -	OT OT OT 2" OT OT OT	Overhead Telephone
BFO - - - 2" BFO - - -	BFO BFO 2" BFO BFO	Buried Fiber Optic
OFO - - - - 1" OFO - - -	OFO OFO 1" OFO OFO	Overhead Fiber Optic

See General Notes, Sheet 1

C:\d\projects\standards\roadway\00002\00002-02.dgn rd960rh 1:51:01 PM 6/28/2012

STANDARD SYMBOLS FOR PLAN SHEETS

TRAFFIC SIGNALS SYMBOLS

EXISTING	PROPOSED	
		Traffic Signal Head (Span Wire Mounted)
		Traffic Signal Head (Pedestal Mounted)
		Traffic Signal Head (Mast Arm Mounted)
		Traffic Signal Pole (Concrete, Wood, Metal)
		Vehicle Detector (Loop)
		Signal Cable (On Messenger Wire)
		Conduit
		Vehicle Detector (Points)
		Pedestrian Detector
		Pedestrian Signal Head (Pole Or Pedestal Mounted)
		Controller Cabinet (Base Mounted)
		Controller Cabinet (Pole Mounted)
W - D W		Walk - Dont Walk
FDW		Flashing Dont Walk
5		Signal Face Number
		Signal Lens
P		Programmed Signal Head
		Messenger Wire
3		Pole Tabulation Cross Reference
*3		Pole Tabulation Cross Reference (Joint Use Pole)
∅		Signal Phase

LIGHTING SYMBOLS

EXISTING	PROPOSED	
		Pole & Luminaire
		Existing Pole & Luminaire To Be Removed
		Final Position Of Relocated Or Adjusted Pole & Luminaire
		High Mast Lighting Tower
		City Or Utility Owned Luminaire & Pole
		PVC (Polyvinyl Chloride) Lighting Conduit And Conductors
		Rigid Galvanized Lighting Conduit And Conductors
		Lighting Pull-Box
		Light Distribution Point
		Joint Use Pole
		Pier Cap Underdeck Luminaire
		Pendant Hung Underdeck Luminaire

SIGNING AND PAVEMENT MARKING SYMBOLS

	Pavement Arrow
	Single Solid Line
	Double Solid Line
	Skip Line
	Stop Bar
	Traffic Sign (Post Mounted)
	Traffic Sign (Overhead)
13	Sign Number
700-83	Sign Item Number
	Traffic Flow Arrow

See General Notes, Sheet 1

6/28/2012 1:51:03 PM rd960rh C:\d\projects\standards\roadway\00002\00002-03.dgn

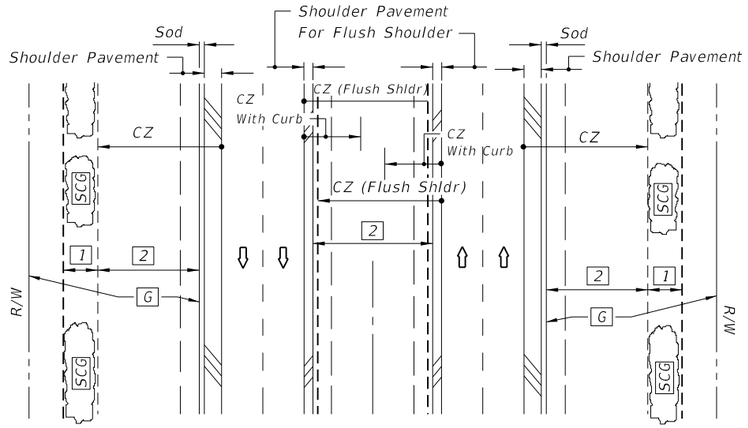

DIVIDED NARROW MEDIAN WITH OR WITHOUT CURBED MEDIAN

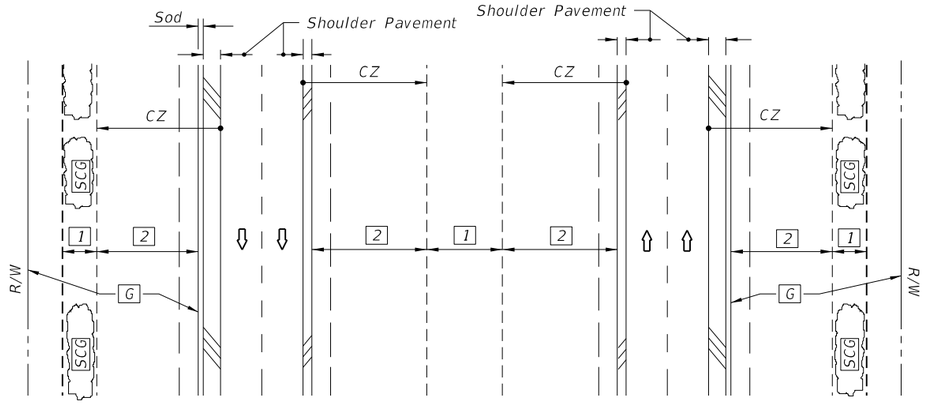

DIVIDED WIDE MEDIAN WITH OR WITHOUT CURBED MEDIAN

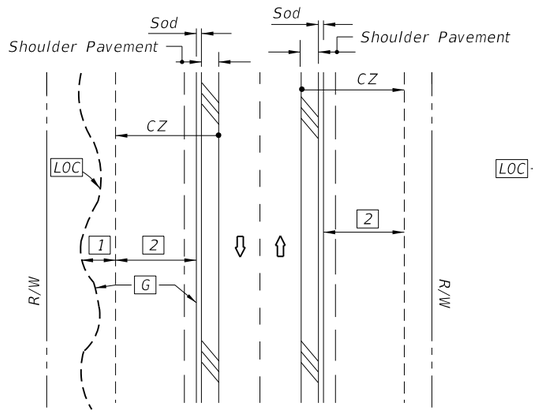

UNDIVIDED FLUSH SHOULDER

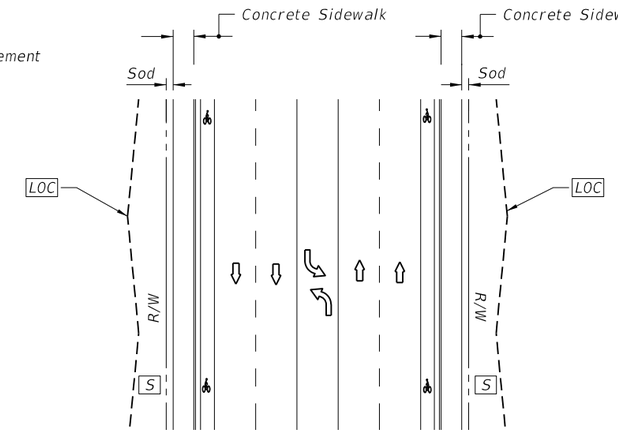

UNDIVIDED CURBED

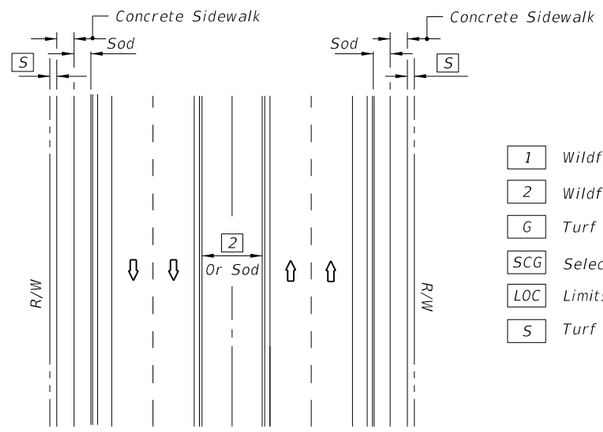

DIVIDED CURBED

LEGEND

1	Wildflower Group #1
2	Wildflower Group #2
G	Turf (To Limit of Construction)
SCG	Selective Clearing And Grubbing
LOC	Limits Of Construction
S	Turf

WILDFLOWER SEEDING RATES

Common Name (Botanical Name)	lbs/ac
#1 Group	
Black-Eyed Susan (Rudbeckia hirta)	2
Lance-Leaf Tickseed (Coreopsis lanceolata)	10
Goldenmane Tickseed (Coreopsis basalis)	10
Leavenworth's Tickseed (Coreopsis leavenworthii)	10
Fire Wheel (Gaillardia pulchella)	10
Softhair Coneflower (Rudbeckia mollis)	2
Crimson Clover (Trifolium incarnatum)	15
#2 Group	
Annual Phlox (Phlox drummondii)	10
Moss Verbena (Verbena tenuisecta)	6
Leavenworth's Tickseed (Coreopsis leavenworthii)	10
Fire Wheel (Gaillardia pulchella)	10
Crimson Clover (Trifolium incarnatum)	15

Note: Wildflower seeding rates are for restoring impacted wildflower areas.

GENERAL NOTES

1. All turf establishment shall be performed meeting the requirements of Section 570 of the Standard Specifications.
2. Activities such as clearing, grading, and excavating that will disturb one or more acres of land require coverage under the Generic Permit for Stormwater Discharge from Large and Small Construction Activities from the Florida Department of Environmental Protection, and implementation of appropriate pollution prevention measures to minimize erosion and sedimentation and properly manage stormwater.
3. Confirm compatibility of wildflower with Seeding Zones.

SEEDING ZONES

C:\d\projects\standards\roadway\00100-s\00104-01.dgn rd960rh 1:51:06 PM 6/28/2012

LAST REVISION	REVISION	DESCRIPTION:		FDOT DESIGN STANDARDS 2013	PERMANENT EROSION CONTROL	INDEX NO.	SHEET NO.
07/01/07						104	1

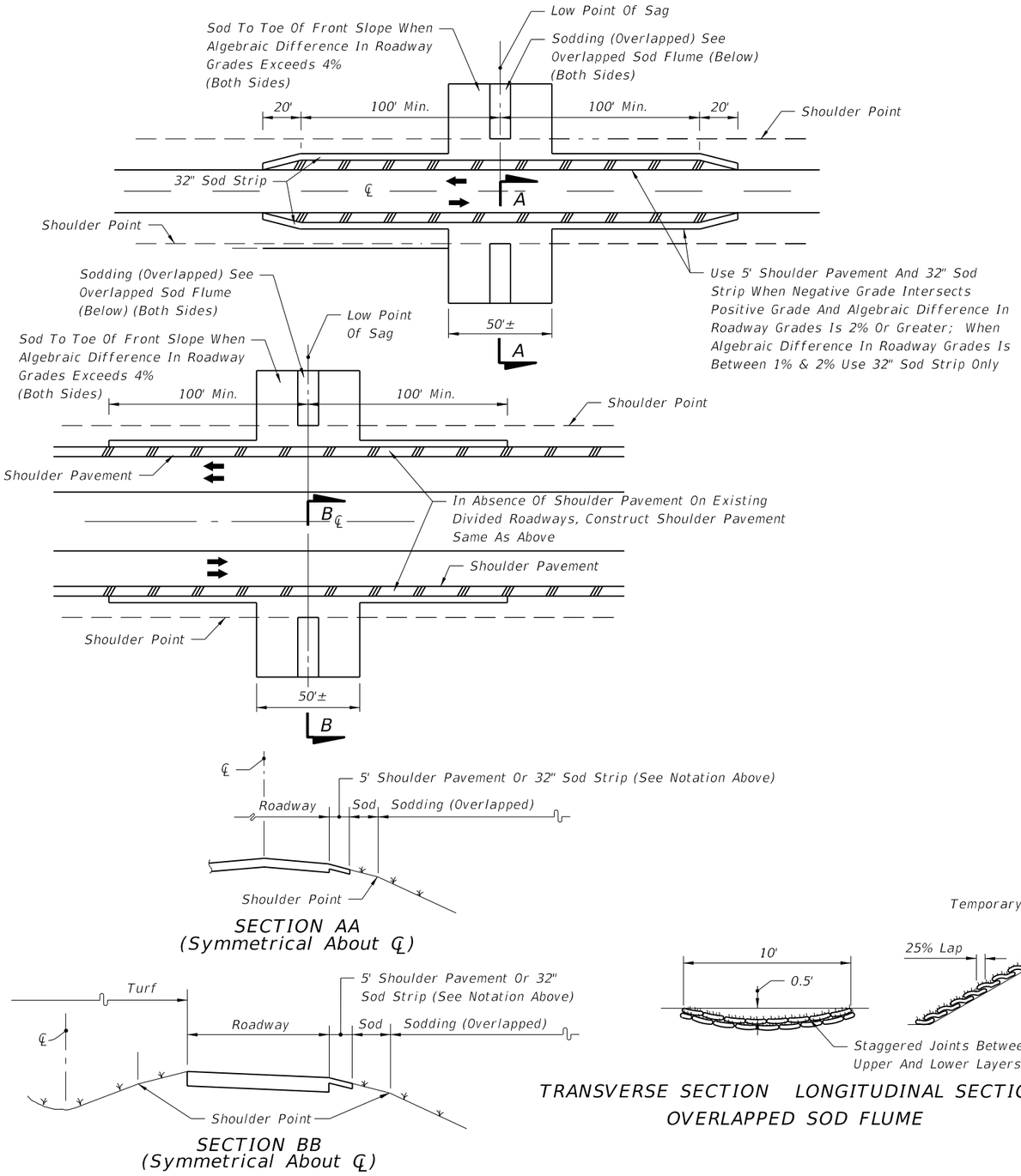

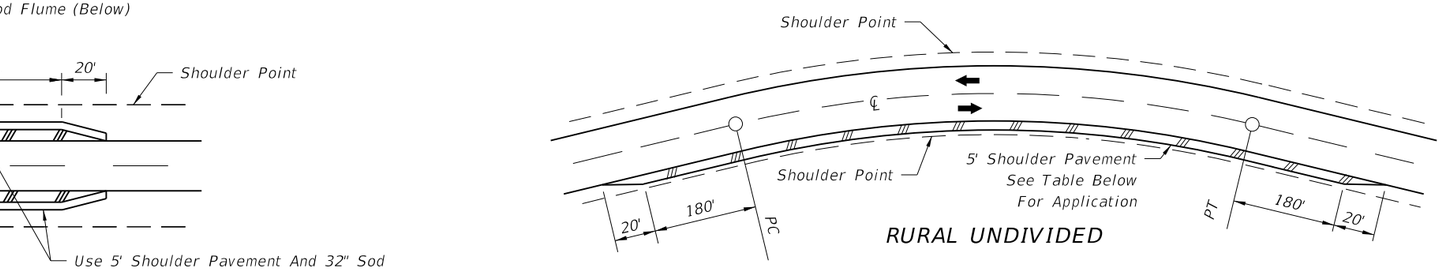

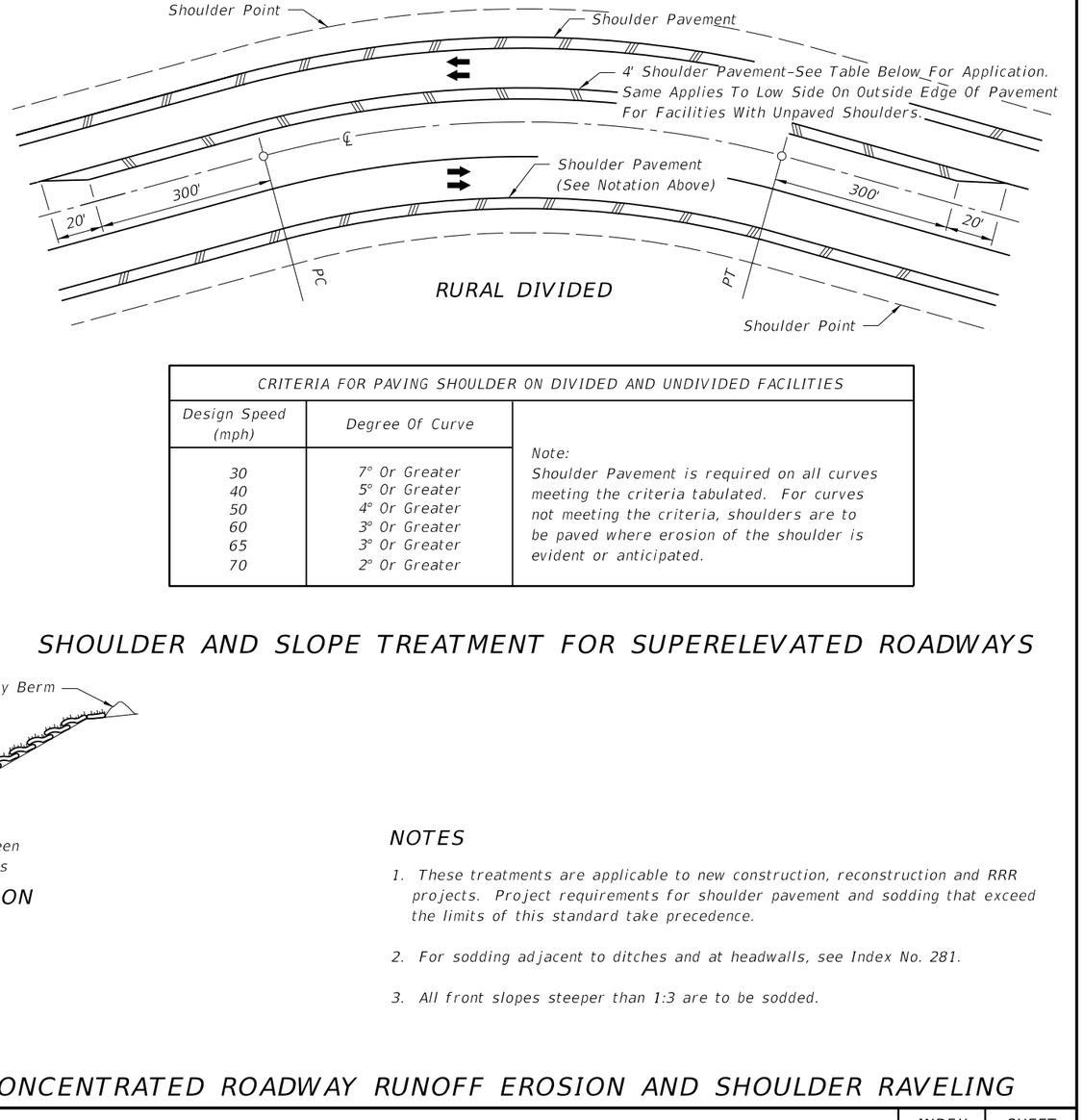

CRITERIA FOR PAVING SHOULDER ON DIVIDED AND UNDIVIDED FACILITIES		
Design Speed (mph)	Degree Of Curve	
30	7° Or Greater	Note: Shoulder Pavement is required on all curves meeting the criteria tabulated. For curves not meeting the criteria, shoulders are to be paved where erosion of the shoulder is evident or anticipated.
40	5° Or Greater	
50	4° Or Greater	
60	3° Or Greater	
65	3° Or Greater	
70	2° Or Greater	

SHOULDER AND SLOPE TREATMENT FOR SUPERELEVATED ROADWAYS

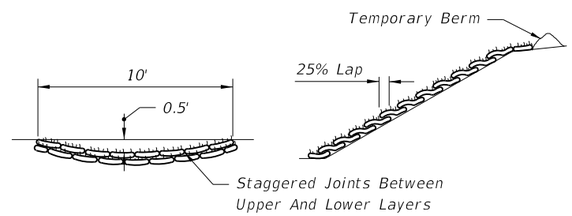

TRANSVERSE SECTION LONGITUDINAL SECTION
OVERLAPPED SOD FLUME

NOTES

1. These treatments are applicable to new construction, reconstruction and RRR projects. Project requirements for shoulder pavement and sodding that exceed the limits of this standard take precedence.
2. For sodding adjacent to ditches and at headwalls, see Index No. 281.
3. All front slopes steeper than 1:3 are to be sodded.

TREATMENTS FOR PROTECTION FROM CONCENTRATED ROADWAY RUNOFF EROSION AND SHOULDER RAVELING

LAST REVISION	REVISION	DESCRIPTION:				
07/01/01			FDOT DESIGN STANDARDS 2013	PERMANENT EROSION CONTROL	INDEX NO. 104	SHEET NO. 2

C:\d\projects\standards\roadway\00100-s\00104-02.dgn
rd960rh
1:51:08 PM
6/28/2012

TREATMENT I

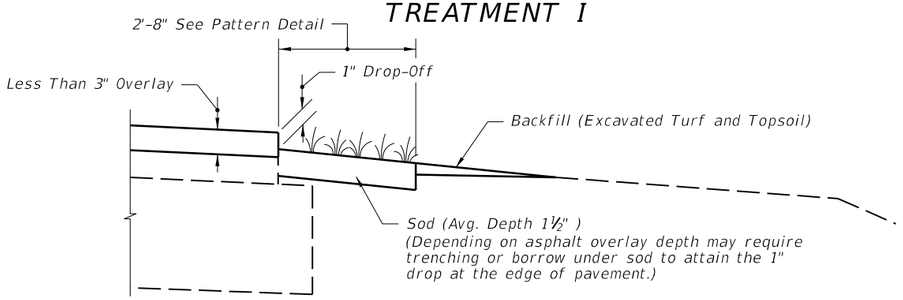

COMPLETED SHOULDER

CRITERIA FOR USING TREATMENT I

Project___
- is resurfacing, widening and resurfacing or construction of shoulder pavement
- is rural or is urban without curb and gutter
- resurfacing build-up is less than 3"

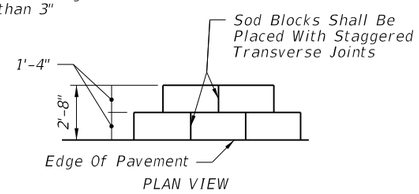

PATTERN DETAIL

TREATMENT II

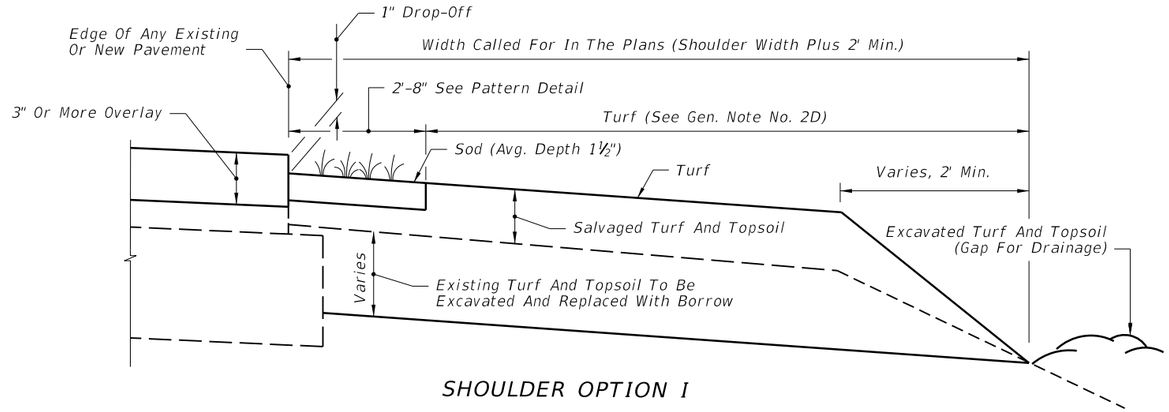

SHOULDER OPTION I

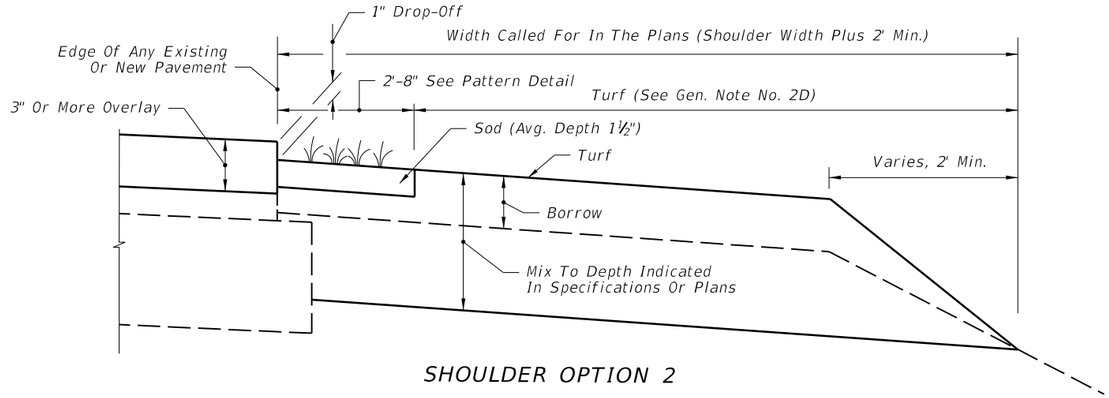

SHOULDER OPTION 2

CRITERIA FOR USING TREATMENT II

Project___
- is resurfacing or construction of shoulder pavement
- is rural or is urban without curb and gutter
- resurfacing build-up is 3" or more

A SIMILAR TREATMENT MAY BE USED FOR PROJECTS THAT REQUIRE SHOULDER WIDENING. DETAILS ARE TO BE SHOWN IN THE PLANS.

GENERAL NOTES

1. Treatment I:

   A. If trenching under sod is necessary to achieve the required 1" drop-off, excavated turf and topsoil are to be used for filling voids and low areas at the edge of pavement or for flushing along the edge of sod. Excess material to be uniformly distributed over the shoulder.

   B. Payment for sod, excavation of turf and topsoil and for back fill of this material under Treatment I is to be included in the contract unit price for Performance Turf, SY. Finish Soil Layer not required.

2. Treatment II:

   A. All borrow shall meet requirements for a "Select" material in accordance with Index 505 and Section 120 of the Standard Specifications.

   B. Borrow may be used in lieu of excavated turf and topsoil when economically feasible, however the upper 6" shall meet the requirements of Section 162 "Finished Soil Layer". There will be no additional payment for substituting borrow for excavated turf and topsoil.

   C. When existing turf and topsoil do not meet the requirements of Section 162 "Finished Soil Layer", provide additive materials as necessary in the upper 6" to meet the requirements of Section 162. There will be no additional payment for additives.

   D. Payment for Treatment II will be under Finished Soil Layer. Sod and other materials for turf establishment shall be paid for as Performance Turf, SY.

3. Special attention is to be directed to the construction of the required 1" drop-off at the edge of pavement.

4. Activities such as clearing, grading, and excavating that will disturb one or more acres of land require coverage under the Generic Permit for Stormwater Discharge from Large and Small Construction Activities from the Florida Department of Environmental Protection, and implementation of appropriate pollution prevention measures to minimize erosion and sedimentation and properly manage stormwater.

5. Turf Establishment:

   A. Wildflowers destroyed by shoulder sodding and turf operations are to be reestablished under the seeding rates prescribed for permanent wildflower #2 Group shown by table on Index 104.

   B. All turf establishment shall be performed meeting the requirements of Section 570 of the Standard Specifications.

C:\d*projects*standards*roadway*00100-s\00105-01.dgn rd960rh 1:51:10 PM 6/28/2012

LAST REVISION	REVISION	DESCRIPTION:		FDOT DESIGN STANDARDS 2013	SHOULDER SODDING AND TURF ON EXISTING FACILITIES	INDEX NO.	SHEET NO.
07/01/10						105	1

STANDARD CRITERIA

CLASS	TYPE (1)	APPLICATION DESCRIPTION	INDEX NO.	PERMITTIVITY (sec^{-1})	AOS SIEVE#	MIN. GRAB TENSILE STRENGTH (lb)	MIN. SEWN STRENGTH (lb/in)	MIN. PUNCTURE (lb)	MIN. TRAPEZOIDAL TEAR (lb)	MIN. WIDE WIDTH TENSILE STRENGTH (lb/in)	UV RESISTANCE (Min. Allowed) %	UV RESISTANCE (Min. Allowed) Time (Hrs.)	COMMENTS
DRAINAGE (D)	D-1	Revetment (Special)		(See D-2)	(See D-2)	315	7.2	113	113		50	500	Woven Monofilament Geotextiles only (Elongation <50%) Provide 12" thick bedding stone layer.
	D-2	Revetment (Standard) Articulating Block**** Gabions Rock, Rubble, Broken Concrete	281	% SOIL PASSING No. 200 SIEVE <15% 0.7 15% to 50% 0.2 >50% 0.1	% SOIL PASSING No. 200 SIEVE <15% 40 15% to 50% 60 >50% 70*	Woven Monofilament 248 Other Geotextiles: Elongation <50% 315 ≥50% 203	Woven Monofilament 5.7 Other Geotextiles: Elongation <50% 6.9 ≥50% 4.7	Woven Monofilament 90 Other Geotextiles: Elongation <50% 113 ≥50% 79	Woven Monofilament 57 Other Geotextiles: Elongation <50% 113 ≥50% 79		50	500	Woven Geotextiles only. No Slit Film Geotextiles allowed. Provide 12" thick bedding stone layer for revetment (standard). The bedding layer may be omitted if a D-1 fabric is used with revetment (standard). ****Bedding Stone not required for Articulating Block. *For cohesive soils with a plasticity index >7, maximum average role value for AOS is number 50 sieve.
	D-3	Underdrain *** French Drain Sheet Piling Filter Filter Fabric Jacket (Culvert) Concrete Pavement Subdrainage	286 285 280 287	% SOIL PASSING No. 200 SIEVE <15% 0.5 15% to 50% 0.2 >50% 0.1	% SOIL PASSING No. 200 SIEVE <15% 40 15% to 50% 60 >50% 70*	Elongation <50% 248 ≥50% 158	Elongation <50% 5.7 ≥50% 3.6	Elongation <50% 90 ≥50% 57	Elongation <50% 90** ≥50% 57		50	500	No woven slit film fabrics allowed. *For cohesive soils with a plasticity index >7, maximum average role value for AOS is number 50 sieve. **Required Trapezoidal tear for woven monofilament is 250. ***See Index No. 286 for the permittivity and AOS values of the internal filter fabric of Type V Underdrain.
	D-4	Slope Pavement (Sand-Cement) Ditch Pavement (Sand-Cement)	 281	0.5	40	180	4.2	50	35		50	500	Non-woven, needle-punch only. Elongation ≥50%
	D-5	Mechanical Stabilized Retaining Wall Cast-In-Place Retaining Wall		0.5	40	90	2.1	50	40		50	500	
	D-6	Slope Pavement (Concrete) Ditch Pavement (Concrete)	 281	0.5	40	180	4.2	50	35		50	500	Non-woven, needle-punch only. Elongation ≥50%
EROSION (E)	E-1	Staked Silt Fence		0.05	NA	90	2.1	NA	35		80	500	Min. Filtration Efficiency of 75% & min. flow rate of 0.3 gal.
	E-2	Wind Screen		0.05	NA	90	2.1	NA	NA		80	150	
	E-3	Plastic Erosion Mat (Turf Reinforcement Mat) (Type 1)		NA	NA	NA	NA	NA	NA	12 x 6	80	500	Use where design shear stress is ≤2.1 psf
	E-4	Plastic Erosion Mat (Turf Reinforcement Mat) (Type 2)		NA	NA	NA	NA	NA	NA	23 x 12	80	500	Use where design shear stress is ≤3.6 psf
	E-5	Plastic Erosion Mat (Turf Reinforcement Mat) (Type 3)		NA	NA	NA	NA	NA	NA	46 x 23	80	500	Use where design shear stress is ≤5.0 psf

(1) Type refers to FDOT class and application.

TABLE I

Test	Unit	Test Method
Permittivity	sec^{-1}	ASTM-D-4491
AOS	US Sieve No.	ASTM-D-4751
Elongation	%	ASTM-D-4632
Grab Tensile Strength	lb	ASTM-D-4632
Wide Width Tensile Strength	lb/in	ASTM-D-4595
Maximum Design Velocity	fps	See Design Note 3
Sewn Strength	lb/in	ASTM-D-4884
Puncture	lb	ASTM-D-4833
Trapezoidal Tear	lb	ASTM-D-4533
Ultraviolet Resistance	% Retained In Strength	ASTM-D-4355
Filtration Efficiency	%	ASTM-D-5141
Flow Rate	gal^3/min	ASTM-D-5141

GENERAL NOTES

1. Specifications for geotextiles are in Section 985. Physical criteria for each application is provided by this standard, in conjunction with those sections.
2. All values except AOS are MINIMUM AVERAGE ROLL values in the weakest principal direction. Values for AOS are MAXIMUM AVERAGE ROLL values.
3. Test soil or fill material adjacent to the geotextile for gradation to select values for permittivity and AOS.
4. Unless specifically restricted in COMMENTS column, any type of material meeting specification 985 may be used.
5. Wide width tensile strength is expressed in units of measure of lb./in., in machine direction and cross direction, as MD x CD.
6. The Manufacturer shall provide results in English Units.

DESIGN NOTES

1. The Designer shall review this criteria and adjust the values as necessary to satisfy project requirements. These adjustments shall be called for in the plans or contained in the project special provisions.
2. UV Resistance: The value represents the percent minimum textile strength retained (ASTM-D-4632) after weathering per ASTM-D-4355 for the test period (hours).
3. Shear stress limits for plastic erosion mats determined by 30 minutes sustained flow in unvegetated state as determined by tests performed by Utah State University, Texas Transportation Institute or an independent testing laboratory approved by the State Drainage Engineer.

LAST REVISION	REVISION	DESCRIPTION:		FDOT DESIGN STANDARDS 2013	GEOTEXTILE CRITERIA	INDEX NO.	SHEET NO.
07/01/12						199	1

C:\d\projects\standards\roadway\00200-s\00199-01.dgn 6/28/2012 1:51:12 PM rd960rh

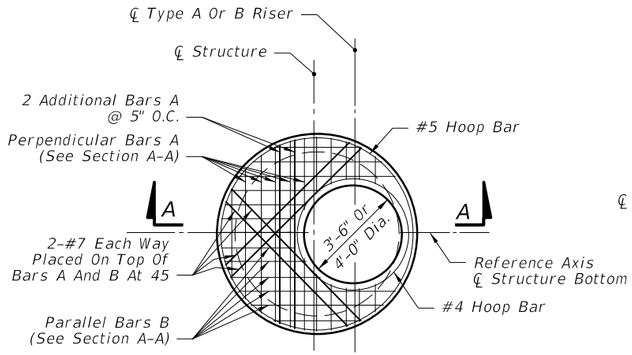

NOTE:
Not Applicable For Type A, B, C, D & E Ditch Bottom Inlets Or Type S & V Gutter Inlets. See Index Nos. 220, 221, 230, 231 & 232.

TOP SLAB REINFORCING STEEL DIAGRAM (ALTERNATE A)

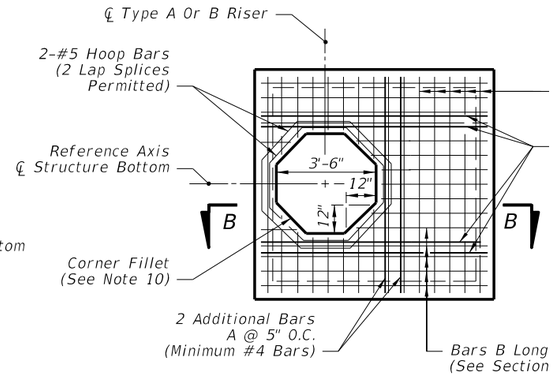

SQUARE OPENING WITH CORNER FILLETS TOP SLAB REINFORCING STEEL DIAGRAM (ALTERNATE B)

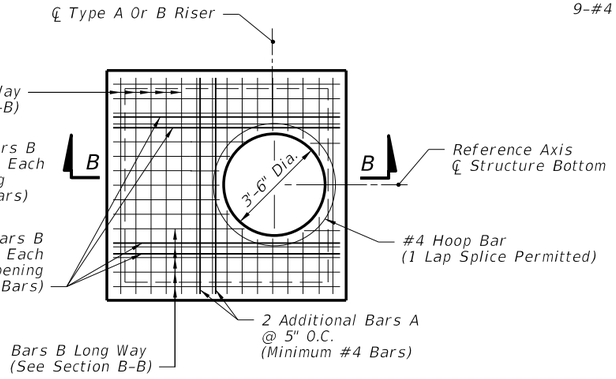

ROUND RISER OPENING

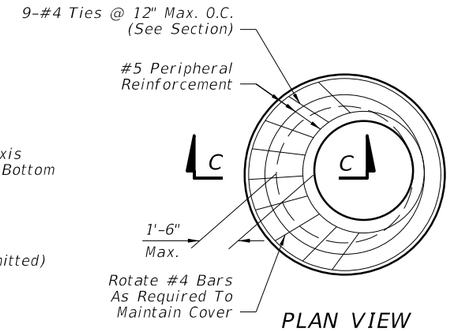

PLAN VIEW

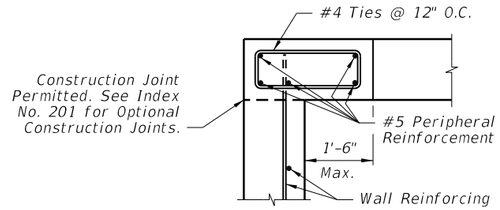

SECTION C-C

SPECIAL TOP SLAB*

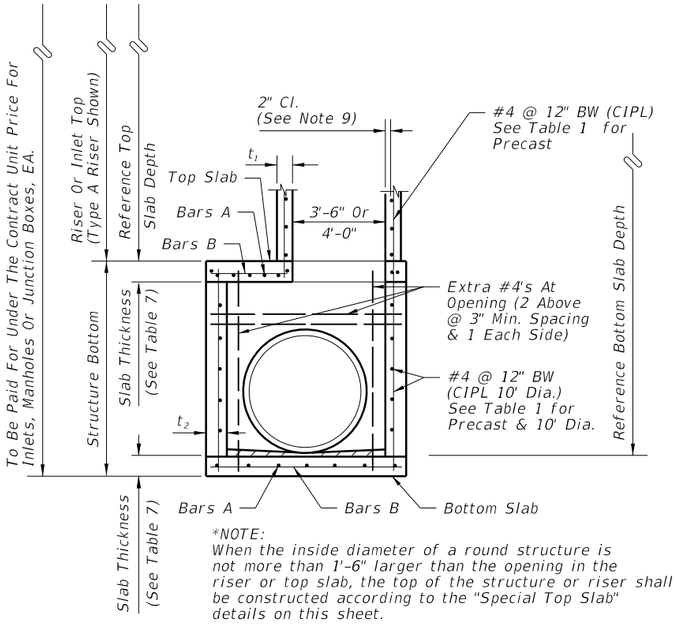

*NOTE:
When the inside diameter of a round structure is not more than 1'-6" larger than the opening in the riser or top slab, the top of the structure or riser shall be constructed according to the "Special Top Slab" details on this sheet.

SECTION A-A (ALTERNATE A)

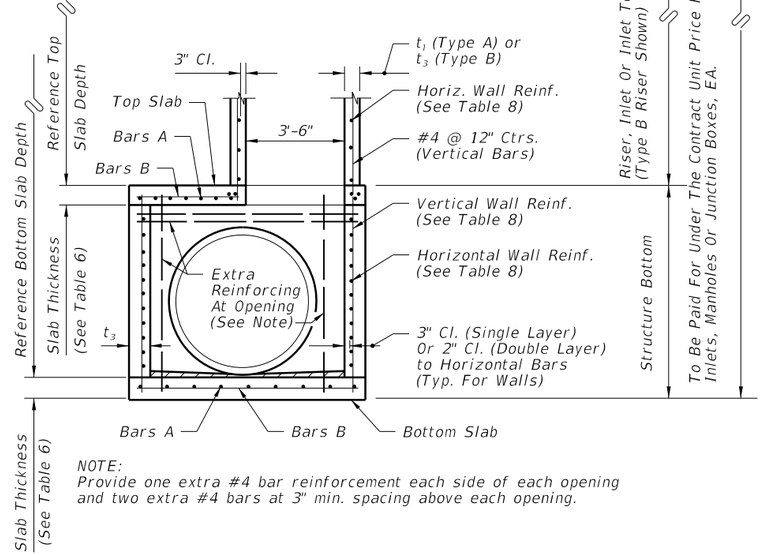

NOTE:
Provide one extra #4 bar reinforcement each side of each opening and two extra #4 bars at 3" min. spacing above each opening.

SECTION B-B (ALTERNATE B)

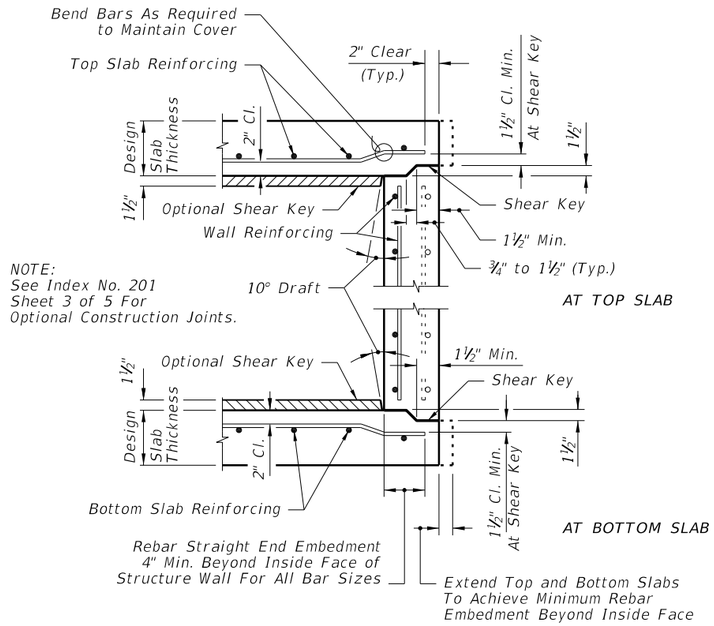

TYPICAL SLAB TO WALL DETAILS FOR PRECAST STRUCTURES

6/28/2012 1:51:14 PM rd960rh C:\d\projects\standards\roadway\00200-s\00200-01.dgn

LAST REVISION	REVISION	DESCRIPTION:			INDEX NO.	SHEET NO.
01/01/10			FDOT DESIGN STANDARDS 2013	STRUCTURE BOTTOMS TYPE J AND P	200	1

ROUND STRUCTURE BOTTOMS (ALTERNATE A) & ROUND RISERS– TABLE 1

Wall Thickness (t_1 & t_2) and Vertical & Horizontal Areas of Reinforcement (A_s)

Type	Structure/Riser Diameter (ft)	Cast–In–Place Items Class II Concrete			Precast Items				
					Class II Concrete			ASTM C478	
		t_1 Riser (in.)	t_2 Bottom (in.)	A_s (in.²/ft.)	t_1 Riser (in.)	t_2 Bottom (in.)	A_s (in.²/ft.)	t_1 or t_2 (in.)	A_2 *** (in.²/ft.)
P	3'–6"	6	8	0.20	6	8	0.20	4**	0.105
P	4'–0"	6	8	0.20	6	8	0.20	5**	0.120
J	5'–0"	–	8	0.20	–	8	0.20	6**	0.150
J	6'–0"	–	8	0.20	–	8	0.20	6	0.180
J	7'–0"	–	8	0.20	–	8	0.20	7	0.210
J	8'–0"	–	8	0.20	–	8	0.20	8	0.240
J	10'–0"	–	10	0.40##	–	10	0.40##	10	0.300
J	12'–0"	–	10	0.40##	–	12	0.40##	12	0.360

TABLE 1 NOTES:

##Provide 0.20 eq. in.²/ft. at each face, 12" max. bar spacing.

**Modified minimum wall thickness.

***Min. total circumferential reinforcement for continuous steel hoops:

A_2 = 0.50 sq. in. for riser section height equal or less than 2'–0" (2 hoop min.)

A_2 = 0.75 sq. in. for riser section height more than 2'–0" up to 4'–0" (3 hoop min.)

Areas of reinforcing for precast items are based on Grade 60 reinforcing;

No reduction in the area of reinforcement is allowed for welded wire fabric in Table 1;

Area of vertical reinforcing may be reduced in accordance with ASTM C478.

SQUARE & RECTANGULAR STRUCTURES (ALTERNATE B) – TABLE 2

Type	Wall Length (ft)	Max. Depth (ft)	Wall Thickness (t_3)	
			CIP (in.)	Precast (in.)
P	≤ 3'–6"	40	6 Riser 8 Bottom	6
J	4'–0"	40	8	6
J	5'–0"	22	–	6
J	6'–0"	15	–	6
J	5'–0" to 9'–0"	40	8	8
J	10'–0"	26	8	8
J	10'–0" to 12'–0"	40	10	9
J	16'–0"	35	–	9
J	16'–0"	40	10	10
J	20'–0"	25	–	9
J	20'–0"	30	10	10

TABLE 2 NOTES:

See Table 8 for Reinforcing Schedule.

GENERAL NOTES

1. Standard structure bottoms 4'–0" diameter and smaller (Alt. A) and 3'–6" square (Alt. B) are designated Type P. Larger standard structure bottoms are designated Type J. Risers are permitted for all structures. Round risers are designated Type A, square risers are designated Type B.

2. Walls of circular structures (Alt. A) constructed in place may be of brick or reinforced concrete. Precast and rectangular structures (Alt. B) shall be constructed of reinforced concrete only.

3. Wall thickness and reinforcement are for either reinforced cast–in–place or precast concrete units except that precast circular units may be furnished with walls in accordance with ASTM C478 (see modified wall thicknesses in Table 1).

4. Top and bottom slab thickness and reinforcement are for precast and cast–in–place construction. All concrete shall be of Class II concrete, except use Class IV concrete when shown in the Plans, for special applications of structures located in extremely aggressive environments. Concrete as specified in ASTM C478 (4000 psi) may be used in lieu of Class II concrete for precast items manufactured in accordance with Specifications Section 449.

5. All reinforcement shown is ASTM A615/A615M Grade 60 steel, deformed bar. Equivalent area Grade 40 steel or equivalent area ASTM A185 (smooth) or ASTM A497 (deformed) welded wire fabric may be substituted according to Index No. 201, unless otherwise noted.

6. Alt. A or Alt. B structure bottoms may be used in conjunction with curb inlet tops Types 1, 2, 3, 4, 5, 6, 9, and 10, and any manhole or junction box unless otherwise shown in the plans or other standard drawings. Alt. B structure bottoms may be used in conjunction with curb inlet Types 7 & 8, or any ditch bottom inlet unless otherwise shown in the plans or other standard drawings.

7. Rectangular structures may be rotated as directed by the Engineer in order to facilitate connections between the structure walls and storm sewer pipes.

8. Except when ACI hooks are specifically required, reinforcement in top and bottom slab shall be straight embedment.

9. All reinforcement must have 2" minimum cover except for 3'–6" diameter precast circular units manufactured under ASTM C478, keyed construction otherwise shown. Additional bars used to restrain hole formers for precast structures with grouted pipe connections,may be left flush with the hole surface. Cut or bend reinforcement at pipe openings to maintain cover. Exposed ends of reinforcing at precast pipe openings and grouted joints must be removed to 1" below the concrete surface and sealed with a Type F epoxy in accordance with Specification Section 926. Horizontal steel in rectangular structures shall be lapped a minimum of 30 bar diameters or by standard hooks at corners.

10. The corner fillets shown are necessary for rectangular structures used with circular risers and inlet throats and when used on skew with rectangular risers, inlets and inlet throats. Fillets will be required in the top slab of the Alt. A structure bottoms when used with the Alt. B risers. Each fillet shall be reinforced with two #5 bars.

11. Inlet walls, throats, risers or manhole tops shall be secured to structures as shown on Index No. 201 (Sheet 3 of 5) Optional Construction Joints.

12. Structures with depths over 14' below the mean high water table are to be checked for flotation by the designer of the drainage project.

13. Units larger than specified standards may be substituted at the contractor's option when these units will not cause or increase the severity of utility conflicts. Such larger units shall be furnished at no additional cost to the Department. Larger Alt. A units cannot replace Alt. B units without approval of the Engineer. This note applies to this Index only.

14. For manhole and junction box tops, for frames and covers, and, for supplementary details and notes see Index No. 201.

15. Type J structure bottoms must have a minimum 6'–0" wall height when possible, for maintenance access.

C:\d\projects\standards\roadway\00200-s\00200-02.dgn
rd960rh
1:51:17 PM
6/28/2012

TABLE 3-MINIMUM STRUCTURE SIZES FOR SINGLE PIPE CONNECTION PER SIDE

PIPE SIZE	RECTANGULAR		ROUND	
	Side Dimension (L)		Diameter (D)	
	Single Pipe Per Side	Note Number	Single Pipe or θ=180°	2 to 4 Pipes θ=90°
18"	3'-6"		3'-6"	4'-0"
24"	3'-6"		3'-6"	5'-0"
30"	3'-6"/4'-0"	2	4'-0"	6'-0"
36"	4'-0"/5'-0"	3	5'-0"	7'-0"
42"	5'-0"		6'-0"	7'-0"
48"	6'-0"		6'-0"	8'-0"
54"	6'-0"		7'-0"	10'-0"
60"	7'-0"		7'-0"	10'-0"
66"	7'-0"/8'-0"	4	8'-0"	12'-0"
72"	8'-0"		8'-0"	12'-0"
78"	9'-0"		10'-0"	12'-0"
84"	9'-0"		12'-0"	N/A

TABLE 3 NOTES:

1. For Round Structures sizes with variable angles between pipes and variable pipe sizes, refer to the FDOT Storm Drain Handbook.
2. For 3'-6" Precast Square Structure Bottoms, 30" Pipes with similar invert elevations are not permitted in adjacent walls. Use 4'-0" Side Dimensions when 30" pipe openings are required on adjacent walls and the difference in flow lines is less than 3'-0".
3. For 4'-0" Precast Square Structure Bottoms, 36" Pipes with similar invert elevations are not permitted in adjacent walls. Use 5'-0" Side Dimensions when 36" pipe openings are required on adjacent walls and the difference in flow lines is less than 3'-0".
4. For 7'-0" Precast Square Structure Bottoms, 66" Pipes with similar invert elevations are not permitted in adjacent walls. Use 8'-0" Side Dimensions when 66" pipe openings are required on adjacent walls and the difference in flow lines is less than 4'-0".

TABLE 4-MINIMUM SIZES FOR MULTIPLE PARALLEL PIPE CONNECTIONS FOR RECTANGULAR STRUCTURE BOTTOMS

PIPE SIZE	PIPE SPACING (S)	MINIMUM WALL LENGTH (L) FOR NUMBER OF PARALLEL PIPES		
		2	3	4
18"	2'-10"	6'-0"	8'-6"	11'-0"
24"	3'-5"	6'-6"	10'-0"	13'-6"
30"	4'-3"	8'-0"	12'-6"	16'-6"
36"	5'-1'	9'-6"	14'-6"	19'-6"
42"	6'-0"	11'-0"	17'-0"	–
48"	6'-9"	12'-6"	19'-0"	–
54"	7'-8"	14'-0"	–	–
60"	8'-6"	15'-0"	–	–
66"	9'-0"	16'-6"	–	–
72"	10'-0"	18'-0"	–	–
78"	10'-9"	19'-0"	–	–
84"	11'-8"	20'-6"	–	–

TABLE 4 NOTES:

1. Minimum wall lengths based on precast structures, using concrete pipe with maximum skew angles per Table 5.
2. Wall lengths exceeding 20'-0" require special designs.

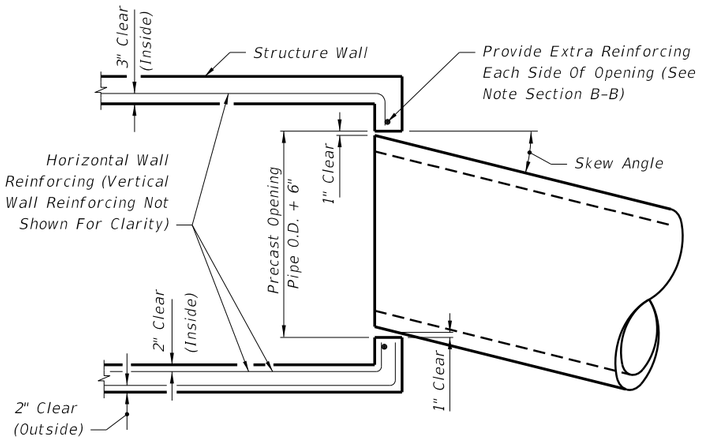

MAXIMUM PIPE SKEW FOR PRECAST ROUND OPENINGS
PLAN VIEW

TABLE 5 - MAXIMUM PIPE SKEW FOR PRECAST ROUND OPENINGS

	WALL THICKNESS	PIPE SIZE											
		18"	24"	30"	36"	42"	48"	54"	60"	66"	72"	78"	84"
MAXIMUM SKEW ANGLE	8"	19°	17°	16°	16°	15°	14°	14°	13°	13°	13°	12°	12°
	6"	21°	20°	18°	17°	17°	16°	15°	15°	14°	14°	13°	13°

TABLE 5 NOTES:
These values are based on 2" clearance for precast structures.
Larger skews are possible for Cast-In-Place Structures or elliptical pipe openings when approved by the Engineer.

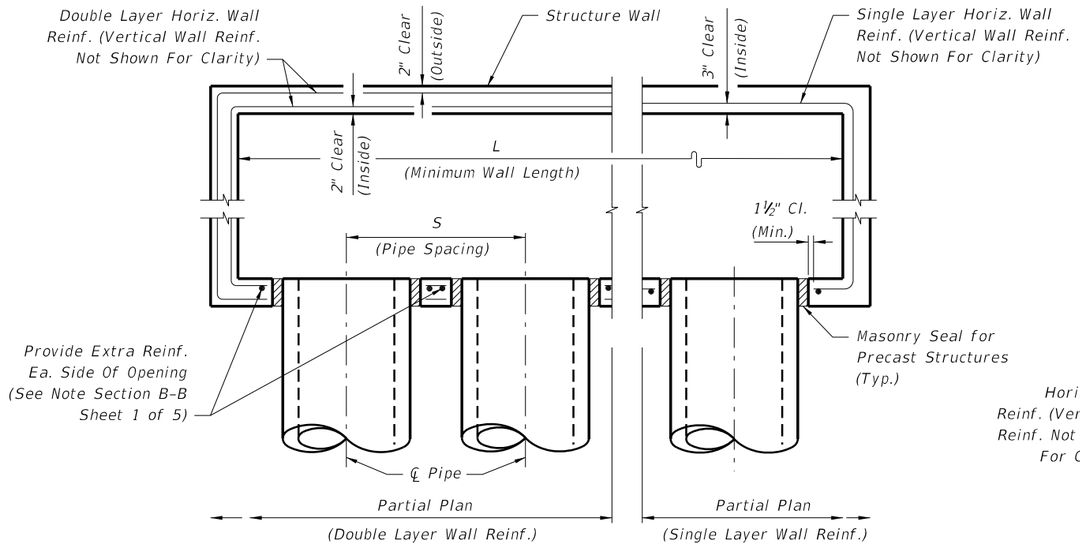

MULTIPLE PARALLEL PIPE CONNECTIONS DETAIL
PLAN VIEW

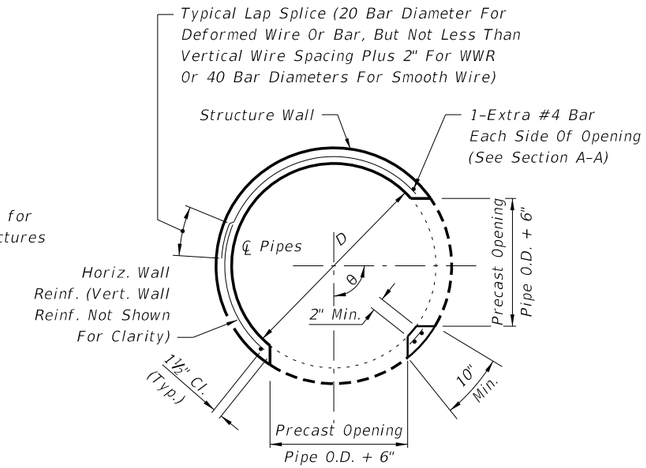

PRECAST ROUND STRUCTURES WITH MULTIPLE PIPE CONNECTIONS

STRUCTURE SIZES FOR PIPE CONNECTIONS

6/28/2012 1:51:19 PM rd960rh C:\d\projects\standards\roadway\00200-s\00200-03.dgn

SLAB DESIGNS - SQUARE AND RECTANGULAR STRUCTURES (TABLE 6)
(ALL SLABS 8" THICK EXCEPT AS NOTED - REINFORCING PARALLEL TO SHORT WAY AND LONG WAY)

SHORT-WAY		LONG-WAY	
SLAB DEPTH	SCHEDULE (Bars A)	SLAB DEPTH	SCHEDULE (Bars B)
SIZE: 3'-6" x UNLIMITED			
≥0.5' < 8'	B10	≥0.5' < 24'	B10
8' < 13'	B5.5	24'-40'	B5.5
13' < 31'	C6.5		
31'-40'	D7		
SIZE: 4' x UNLIMITED			
≥0.5' < 7'	B5.5	≥0.5' < 15'	B10
7' < 19'	C6.5	15' < 29'	B5.5
19' < 31'	D7	29'-40'	C6.5
31'-40'	E5		
SIZE: 5' x 5'			
≥0.5' < 3'	C6.5	≥0.5' < 3'	C6.5
3' < 7'	B5.5	3' < 13'	C6.5
7' < 22'	C6.5	13' < 22'	D7
22' < 29'	D7	22' < 29'	D4.5
29'-40'	E5	29'-40'	E5
SIZE: 5' x 6'			
≥0.5' < 12'	C6.5	≥0.5' < 3'	C6.5
12' < 26'	D7	3' < 9'	B5.5
26'-40'	E5	9' < 23'	C3.5
		23' < 35'	D4.5
		35'-40'	E5
SIZE: 5' x 7'			
≥0.5' < 10'	C6.5	≥0.5' < 10'	B5.5
10' < 20'	D7	10' < 31'	C3.5
20' < 34'	E5	31'-40'	D4.5
34'-40'	F5		
SIZE: 5' x 8'			
≥0.5' < 7'	C6.5	≥0.5' < 8'	B10
7' < 13'	D7	8' < 17'	B5.5
13' < 24'	E5	17' < 25'	C6.5
24'-40'	F5	25'-40'	C3.5
SIZE: 5' x 9'			
≥0.5' < 8'	C6.5	≥0.5' < 14'	B10
8' < 14'	D7	14' < 24'	B5.5
14' < 25'	E5	24' < 34'	C6.5
25'-40'	F5	34'-40'	C3.5
SIZE: 5' x UNLIMITED			
≥0.5' < 8'	C6.5	≥0.5' < 14'	B10
8' < 14'	D7	14' < 24'	B5.5
14' < 25'	E5	24' < 34'	C6.5
25'-40'	F5	34'-40'	C3.5

SHORT-WAY		LONG-WAY	
SLAB DEPTH	SCHEDULE (Bars A)	SLAB DEPTH	SCHEDULE (Bars B)
SIZE: 6' x 6'			
≥0.5' < 13'	C6.5	≥0.5' < 10'	C3.5
13' < 23'	D7	10' < 18'	D4.5
23'-40'	E5	18' < 27'	E5
		27' < 33'	E3
		33'-40'	F5
SIZE: 6' x 7'			
≥0.5' < 8'	C6.5	≥0.5' < 8'	C6.5
8' < 16'	D7	8' < 12'	C3.5
16' < 28'	E5	12' < 21'	D4.5
28'-40'	F5	21' < 28'	E5
		28' < 35'	E3
		35'-40'	F5
SIZE: 6' x 8'			
≥0.5' < 6'	C6.5	≥0.5' < 6'	B5.5
6' < 13'	D7	6' < 11'	C6.5
13' < 22'	E5	11' < 17'	C3.5
22' < 35'	F5	17' < 22'	D4.5
35'-40'	G5	22' < 32'	E5
		32'-40'	E3
SIZE: 6' x 9'			
≥0.5' < 8'	D7	≥0.5' < 8'	B5.5
8' < 14'	E5	8' < 14'	C6.5
14' < 24'	F5	14' < 21'	C3.5
24'-34'	G5	21' < 25'	D4.5
		25'-34'	E5
SIZE: 6' x UNLIMITED			
≥0.5' < 8'	D7	≥0.5' < 8'	B5.5
8' < 14'	E5	8' < 14'	C6.5
14' < 24'	F5	14' < 21'	C3.5
24'-34'	G5	21' < 25'	D4.5
		25'-34'	E5
SIZE: 7' x 7'			
≥0.5' < 8'	C6.5	≥0.5' < 4'	C6.5
8' < 15'	D7	4' < 7'	C3.5
15' < 26'	E5	7' < 11'	D4.5
26'-40'	F5	11' < 22'	E3
		22' < 32'	F3.5
		32'-40'	G3.5
SIZE: 7' x 8'			
≥0.5' < 5'	C6.5	≥0.5' < 5'	C6.5
5' < 11'	D7	5' < 8'	C3.5
11' < 19'	E5	8' < 13'	D4.5
19' < 30'	F5	13' < 22'	E3
30'-40'	G5	22' < 30'	F3.5
		30'-40'	G3.5
SIZE: 7' x 9'			
≥0.5' < 9'	D7	≥0.5' < 7'	C6.5
9' < 15'	E5	7' < 10'	C3.5
15' < 25'	F5	10' < 14'	D4.5
25' - 34'	G5	14' < 21'	E5
		21' < 29'	F5
		29'-34'	F3.5

SHORT-WAY		LONG-WAY	
SLAB DEPTH	SCHEDULE (Bars A)	SLAB DEPTH	SCHEDULE (Bars B)
SIZE: 8' x 8'			
≥0.5' < 10'	D7	≥0.5' < 9'	D4.5
10' < 19'	E5	9' < 13'	E5
19'-30'	F5	13' < 18'	F5
		18' < 23'	F3.5
		23'-30'	G3.5
SIZE: 8' x 9'			
≥0.5' < 8'	D7	≥0.5' < 7'	D7
8' < 14'	E5	7' < 9'	D4.5
14' < 23'	F5	9' < 15'	E3
23'-31'	G3.5	15' < 20'	F5
		20' < 23'	F3.5
		23'-31'	G3.5
SIZE: 9' x 9'			
≥0.5' < 8'	D7	≥0.5' < 7'	D4
8' < 14'	E5	7' < 10'	E5
14' < 22'	F5	10' < 17'	F3.5
		17' < 22'	G3.5
SIZE: 9'x9'x10" SLAB THICKNESS			
22' < 36'	F5	22' < 31'	F3.5
36'-40'	G5	31'-40'	G3.5
SIZE: 10'x10'x10" SLAB THICKNESS			
≥0.5' < 7'	C6.5	0.5' < 6'	C6.5
7' < 10'	D7	6' < 9'	D4.5
10' < 18'	E5	9' < 15'	E5
18' < 27'	F5	15' < 22'	F5
27'-32'	G5	22'-32'	G3.5
SIZE: 12'x12'x12" SLAB THICKNESS			
≥0.5' < 10'	D7	≥0.5' < 8'	D7
10' < 16'	E5	8' < 14'	E5
16' < 25'	F5	14' < 22'	F5
25'-35'	G5	22' < 30'	G5
		30'-35'	H4

SLAB DESIGNS - ROUND STRUCTURES (TABLE 7)

SLAB DEPTH	SLAB THICKNESS	REINF. (2-WAY) SCHEDULE
SIZE: 3'-6" DIAMETER		
2'-15'	6" Precast	C6.5
0.5' < 30'	8"	A6
30'-40'	8"	B5.5
SIZE: 4'-0" DIAMETER		
≥0.5' < 19'	8"	A6
19' < 30'	8"	B5.5
30'-40'	8"	C6.5
SIZE: 5'-0" DIAMETER		
≥0.5' < 15'	8"	B5.5
15' < 26'	8"	C6.5
26' < 35'	8"	D7
35'-40'	8"	D4.5
SIZE: 6'-0" DIAMETER		
≥0.5' < 9'	8"	B5.5
9' < 15'	8"	C6.5
15' < 22'	8"	C3.5
22' < 30'	8"	D4.5
30'-40'	8"	E5
SIZE: 7'-0" DIAMETER		
≥0.5' < 8'	8"	C3.5
8' < 16'	8"	D4.5
16' < 23'	8"	E5
23' < 27'	8"	E3
27'-40'	8"	F3.5
SIZE: 8'-0" DIAMETER		
≥0.5' < 10'	8"	D4.5
10' < 16'	8"	E5
16' < 19'	8"	E3
19' < 29'	8"	F3.5
29'-40'	10"	F5
SIZE: 10'-0" DIAMETER		
≥0.5' < 12'	10"	D4.5
12' < 20'	10"	E5
20' < 28'	10"	F5
28'-40'	10"	G3.5
SIZE: 12'-0" DIAMETER		
≥0.5' < 8'	10"	D4.5
8' < 13'	10"	E5
13' < 18'	10"	F5
18' < 26'	10"	G3.5
26'-40'	12"	G3.5

SLAB AND WALL DESIGN TABLE NOTES

1. Size is the inside dimension(s) of a structure.
2. Slab reinforcement is appropriate for top, intermediate, and bottom slabs.
3. Bottom Slabs for precast 3'-6" x 3'-6" rectangular structures at 15' depth or less, may be 6" thick.
4. Slab depth is measured from finished grade to top of slab.
5. Wall depth is measured to the top of the bottom slab for boxes and to the top of the intermediate slab for risers.
6. Wall height is the distance between top of lower slab to bottom of upper slab. Maximum wall height is 12' for wall lengths exceeding 5', or 10' for wall lengths exceeding 12'.
7. Wall lengths exceeding 6'-0" require two layers of reinforcing (See Table 8) with 2" of cover from the horizontal bars to the inside and outside faces for each layer.
8. Wall lengths exceeding the dimensions or depths shown in Table 8, or 12'-0" diameter require a special design.
9. Wall thickness and reinforcing for rectangular structures is the same for both long and short sides.
10. Reinforcing schedules with larger areas of steel may be substituted for schedules with smaller bar or wire spacing, except that Schedule B10 may not be substituted for Schedule A6. See Index 201, Sheet 4 for allowable bar spacing adjustments when larger areas of reinforcing are substituted.

6/28/2012 1:51:21 PM rd960rh C:\d\projects\standards\roadway\00200-s\00200-04.dgn

WALL DESIGNS - RECTANGULAR STRUCTURES (TABLE 8)

VERTICAL REINFORCING			HORIZONTAL REINFORCING			WALL THICKNESS
WALL DEPTH	SCHEDULE		WALL DEPTH	SCHEDULE		
SIZE: 3'-6' & RISERS						
≥1.17' – 40'	A12		≥1.17' < 10'	B10		6"/8"
			10' < 18'	B5.5		6"/8"
			18' < 29'	C6.5		6"/8"
			29' – 40'	C3.5		6"/8"
SIZE: 4'-0"						
≥1.17' – 40'	A12		≥1.17' < 6'	B10		6"/8"
			6' < 10'	B5.5		6"/8"
			10' < 20'	C6.5		6"/8"
			20' < 28'	C3.5		6"/8"
			28' – 40'	D4.5		6"/8"
SIZE: 5'-0"						
≥1.17' – 40'	A12		≥1.17' < 5'	B5.5		6"/8"
			5' < 9'	C6.5		6"/8"
			9' < 15'	C3.5		6"/8"
			15' < 22'	D4.5		6"/8"
			22' – 40'	E3		8"
SIZE: 6'-0"						
≥1.17' < 26'	A12		≥1.17' < 9'	C3.5		6"/8"
			9' < 15'	D4.5		6"/8"
			15' < 26'	E3		8"
	Inside	Outside		Inside	Outside	
26' – 40'	A12	A12	26' – 40'	D7	D7	8"
SIZE: 7'-0"						
	Inside	Outside		Inside	Outside	
≥1.17' < 25'	A12	A12	≥1.17' < 7'	B10	B10	8"
26' – 40'	B10	B10	7' < 10'	B5.5	B5.5	8"
			10' < 20'	C6.5	C6.5	8"
			20' < 30'	D7	D7	8"
			30' – 40'	E5	E5	8"
SIZE: 8'-0"						
	Inside	Outside		Inside	Outside	
≥1.17' < 20'	A12	A12	≥1.17' < 6'	B5.5	B5.5	8"
20' – 40'	C6.5	C6.5	6' < 13'	C6.5	C6.5	8"
			13' < 22'	D7	D7	8"
			22' < 31'	E5	E5	8"
			31' – 40'	F5	F5	8"
SIZE: 9'-0"						
	Inside	Outside		Inside	Outside	
≥1.17' < 12'	A12	A12	≥1.17' < 8'	C6.5	C6.5	8"
12' < 28'	C6.5	C6.5	8' < 15'	D7	D7	8"
28' – 40'	D7	D7	15' < 23'	E5	E5	8"
			23' – 40'	F5	F5	8"
SIZE: 10'-0"						
	Inside	Outside		Inside	Outside	
≥1.17' < 10'	B10	B10	≥1.17' < 10'	D7	D7	8"
10' < 21'	C6.5	C6.5	10' < 17'	E5	E5	8"
21' < 26'	D7	D7	17' < 26'	F5	F5	8"
26' – 40'	C6.5	C6.5	26' – 40'	F5	F5	10"

VERTICAL REINFORCING			HORIZONTAL REINFORCING			WALL THICKNESS
WALL DEPTH	SCHEDULE		WALL DEPTH	SCHEDULE		
SIZE: 10'-0" (Precast Only)						
	Inside	Outside		Inside	Outside	
26' – 40'	D7	D7	26' – 40'	F5	F5	9"
SIZE: 12'-0"						
	Inside	Outside		Inside	Outside	
≥1.17' < 14'	B10	B10	≥1.17' < 10'	C6.5	C6.5	10"
14' < 25'	C6.5	C6.5	10' < 17'	D7	D7	10"
25' – 40'	D7	D7	17' < 24'	E5	E5	10"
			24' – 40'	F5	F5	10"
SIZE: 12'-0" (Precast Only)						
	Inside	Outside		Inside	Outside	
≥1.17' < 12'	B10	B10	≥1.17' < 10'	D7	D7	9"
12' < 24'	C6.5	C6.5	10' < 17'	D4.5	D4.5	9"
24' – 40'	D7	D7	17' < 23'	E5	E5	9"
			23' < 32'	F5	F5	9"
			32' – 40'	G5	G5	9"
SIZE: 16'-0"						
	Inside	Outside		Inside	Outside	
≥1.17' < 11'	C6.5	C6.5	≥1.17' < 13'	D7	D7	10"
11' < 20'	D7	D7	13' < 20'	E5	E5	10"
20' < 28'	E5	E5	20' < 28'	F5	F5	10"
28' – 40'	F5	F5	28' – 40'	G5	G5	10"
SIZE: 16'-0" (Precast Only)						
	Inside	Outside		Inside	Outside	
≥1.17' < 10'	C6.5	C6.5	≥1.17' < 9'	D7	D7	9"
10' < 18'	D7	D7	9' < 13'	D4.5	D4.5	9"
18' < 25'	E5	E5	13' < 19'	E5	E5	9"
25' – 35'	F5	F5	19' < 27'	F5	F5	9"
			27' – 35'	G5	G5	9"
SIZE: 20'-0"						
	Inside	Outside		Inside	Outside	
≥1.17' < 10'	C6.5	C6.5	≥1.17' < 8'	D7	D7	10"
10' < 17'	D7	D7	8' < 12'	E5	E5	10"
17' – 30'	E5	E5	12' < 20'	F5	F5	10"
			20' – 30'	G5	G5	10"
SIZE: 20'-0" (Precast Only)						
	Inside	Outside		Inside	Outside	
≥1.17' < 8'	C6.5	C6.5	≥1.17' < 8'	D4.5	D4.5	9"
8' < 13'	D7	D7	8' < 12'	E5	E5	9"
13' – 25'	E5	E5	12' < 19'	F5	F5	9"
			19' – 25'	G5	G5	9"

REINFORCING SCHEDULE				
SCHEDULE	GRADE 60 BARS OR 65 KSI & 70 KSI WELDED WIRE REINFORCING			
	GRADE 60 AREA ($in.^2/ft.$)	MAXIMUM SPACING		
		GR 60 BARS (in.)	WWR EQUIV. AREA*	
			65 KSI (in.)	70 KSI (in.)
A12	0.20	12	8	8
A6	0.20	6	5	4½
B10	0.24	10	8	7½
B5.5	0.24	5½	5	4
C6.5	0.37	6½	6	5
C3.5	0.37	3½	3	2½
D7	0.53	7	6	5
D4.5	0.53	4½	4	3½
E5	0.73	5	4	4
E3	0.73	3	3	3
F5	1.06	5	4	4
F3.5	1.06	3½	3	3
G5	1.45	5	4	4
G.3.5	1.45	3½	3	3
H4	1.75	4	3	3

*Equivalent Area Welded Wire Reinforcing may be substituted in accordance with Index No. 201, Sheet 4.

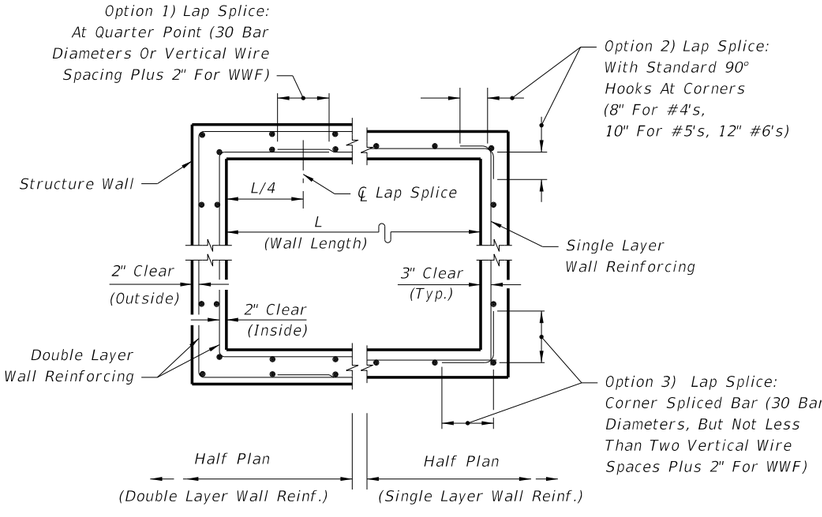

WALL REINFORCING SPLICE DETAILS
(ALTERNATE B)

C:\d\projects\standards\roadway\00200-s\00200-05.dgn
rd960rh
1:51:23 PM
6/28/2012

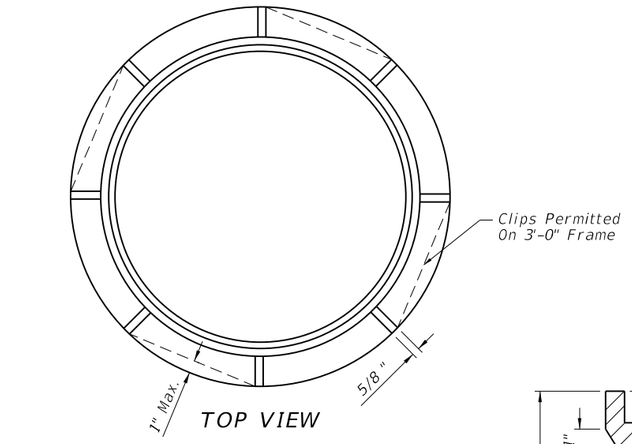

TOP VIEW

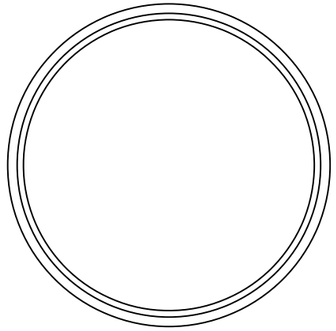

TOP VIEW

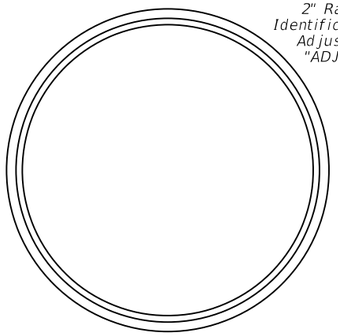

TOP VIEW

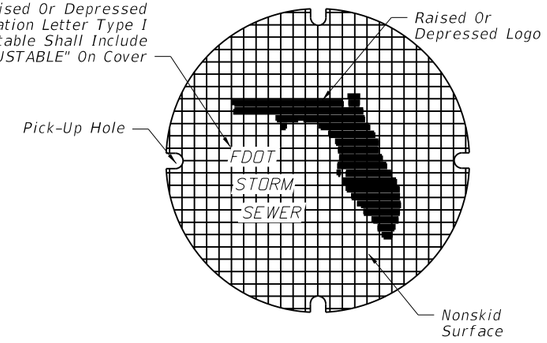

TOP VIEW

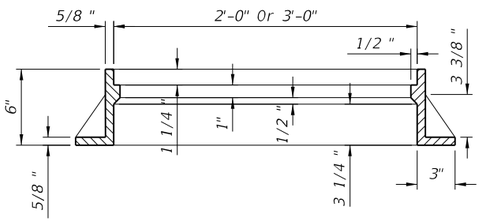

SECTION

For Manholes

TYPE I

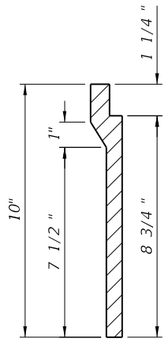

WALL SECTION

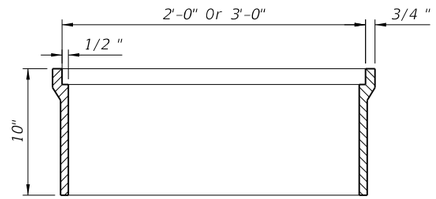

SECTION

For Curb Inlets Types 1, 2, 3, & 4

TYPE II

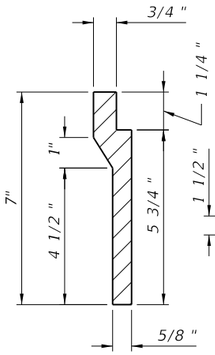

WALL SECTION

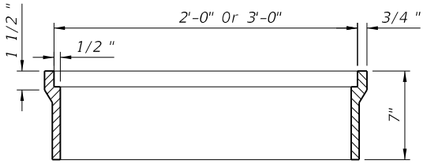

SECTION

For Curb Inlets Types 7 & 8

TYPE III

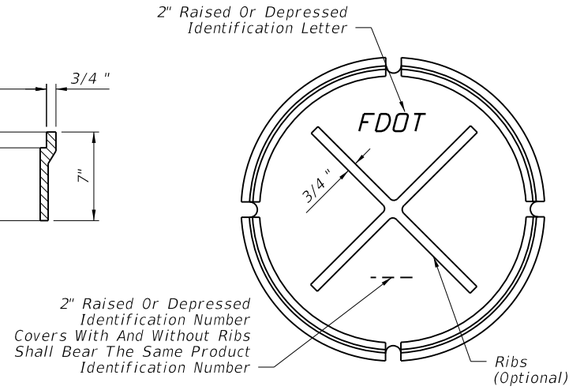

BOTTOM VIEW

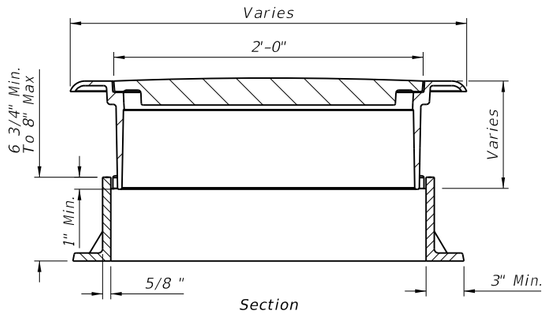

Section

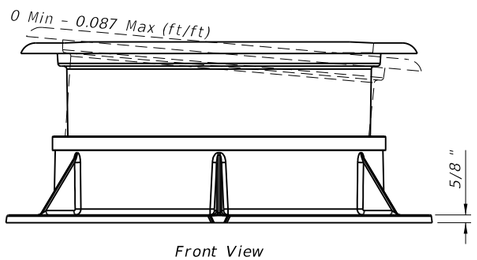

Front View

TYPE I ADJUSTABLE

WEIGHT OF CASTINGS (lb)						
Frame Type	2' OPENING		3' OPENING			
	Frame	Cover (Std.)	Frame	2-Piece Cover		
				Inside	Outside	Total
I *	155	190	220	190	220	410
II	145	190	255	190	220	410
III	90	190	180	190	220	410

* Includes Type I Adjustable

NOTES (FRAMES, AND COVER)

1. The standard cover is to be used for all frames Types I, II, III and the 2-piece cover, and is the replacement cover for all previous frames with 1½" deep seats (traffic type). The 185 lb. cover (nontraffic type), 1984 Roadway and Traffic Design Standards Index No. 201, is the replacement cover for existing frames with ½" deep seats. Installation of frame with ½" deep seats is not permitted.

2. Use the 2'-0" cover, unless the 2-piece cover is called for in the plans, except at inlets and manholes with sump bottoms use the 2-piece cover when the sump depth exceeds 2', unless otherwise noted.

DESIGNER NOTE:

Consider using the 2-piece cover where depths exceed 5' and manual entry may be required for cleaning. Clearly note the requirement for a 2-piece cover, on the Drainage Structure sheets in the plans.

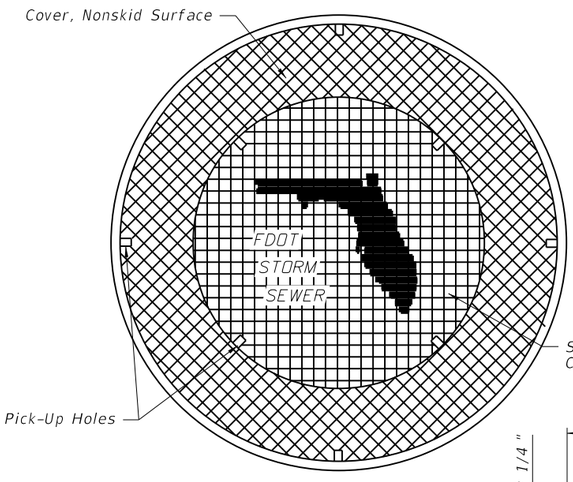

For Use With Types I, II And III Frames With 3'-0" Opening

2-PIECE COVER

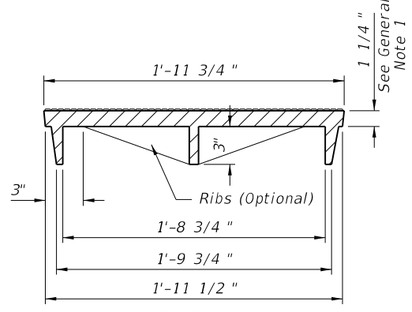

SECTION

COVER FOR ALL FRAMES

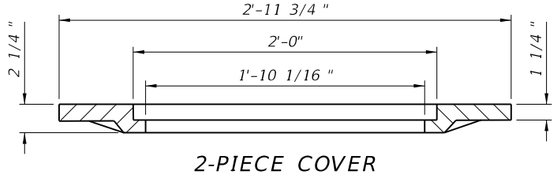

2-PIECE COVER

C:\d*projects*standards*roadway*00200-s*00201-01.dgn rd960rh 1:51:27 PM 6/28/2012

LAST REVISION	REVISION	DESCRIPTION:				
01/01/12			FDOT DESIGN STANDARDS 2013	SUPPLEMENTARY DETAILS FOR MANHOLES & INLETS	INDEX NO. 201	SHEET NO. 1

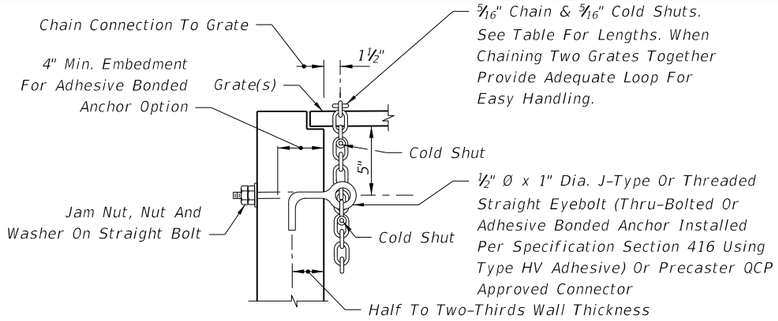

NOTE: When Alternate "G" grate is specified, the chain, bolt, nuts, washer and cold shuts shall be galvanized in accordance with Section 425 of the Standard Specifications.

Cost of eyebolt and chain to be included in the contract unit price for inlets.

EYEBOLT AND CHAIN REQUIREMENTS

Index Number	Inlet Type	Eye-Bolts	Length Of Chain	Handling & Remarks
217	(MB) 1	1	4'-0"	Slide & Spin
	(MB) 2	1	4'-0"	Slide & Spin
	(MB) 3	2	2 @ 4'-0"	Slide & Spin
	(MB) 4	2	2 @ 4'-0"	Slide & Spin
	(MB) 5	2	2 @ 4'-0"	Slide & Spin
218	(BW)	1	3'-8"	Slide Or Slide & Spin
219	(BW, RGD)	1	4'-0"	Slide & Spin
220	S	1	4'-0"	Slide & Spin
221	V	1	4'-0"	Slide & Spin
230	A	1	3'-0"	Slide
231	B	1	5'-0"	Slide & Spin
232	C	1	2'-6"	Slide & Spin
	D	1	2'-6"	Slide & Spin
	E	2	2 @ 2'-6"	Slide & Spin
	H	2	2 @ 2'-6"	Flip Ctr. Grate and Slide & Spin Single Free Grate
			1 or 2 @ 1'-6"	Ctr. Grate(s) Chained To One End Grate
233	F	1	3'-6"	Flip Or Slide & Spin
	G	1	6'-0"	Slide
			2'-0"	Lifting Loop
234	J	1	4'-0"	Slide & Spin

EYEBOLT AND CHAIN FOR LOCKING GRATES TO INLETS

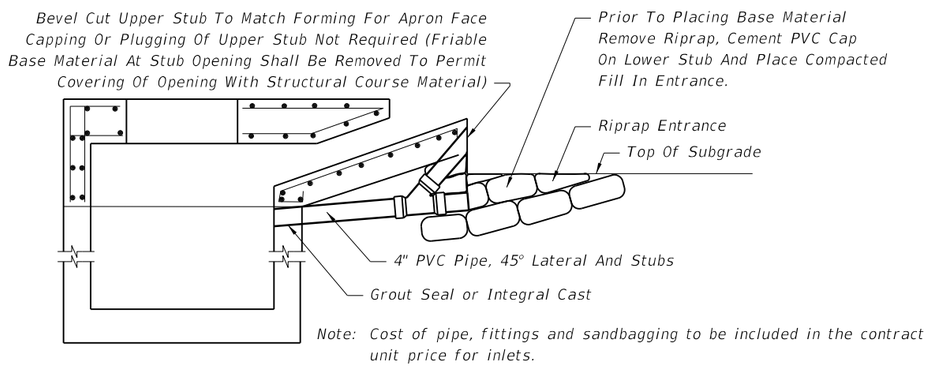

Note: Cost of pipe, fittings and sandbagging to be included in the contract unit price for inlets.

TEMPORARY DRAINS FOR SUBGRADE AND BASE

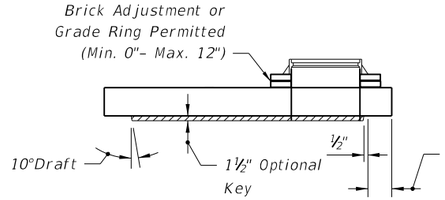

SECTION

Note: See Slab Designs Index No. 200.

TYPE 7

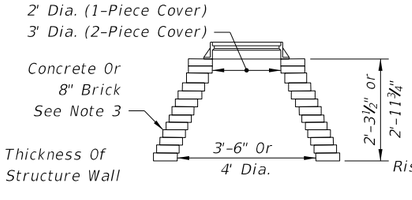

BRICK OR CONCRETE

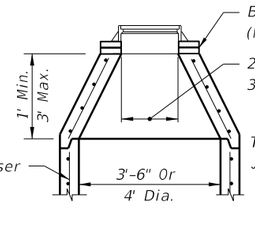

PRECAST CONCENTRIC CONE

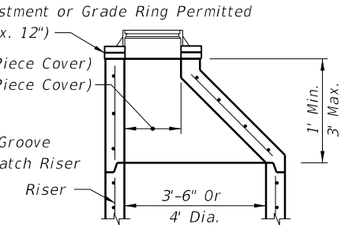

PRECAST ECCENTRIC CONE

TYPE 8

MANHOLE TOPS

NOTES (TOPS)

1. Manhole top Type 7 slabs shall be of Class II concrete. Concrete as specified in ASTM C478 may be used for precast units; see General Note No. 3.
2. Manhole top Type 7 slabs may be of cast-in-place or precast construction. The optional key is for precast tops and in lieu of dowels. Frame and slab openings are to be omitted when top is used over a junction box.
3. Manhole top Type 8 may be of cast-in-place or precast concrete construction or brick construction. For concrete construction, the concrete and steel reinforcement shall be the same as the supporting wall unit. An eccentric cone may be used.
4. Manhole tops shall be secured to structures by optional construction joints as shown on Sheet 3.
5. Frames can be adjusted a maximum 12" height with brick or precast ASTM C478 grade rings.
6. Substitution of manhole top Type 8 for manhole top Type 7 is allowed provided that minimum dimensions shown above are not reduced.
7. Substitution of Manhole top Type 7 for Type 8 is allowed if the minimum thickness (h) above pipe opening cannot be maintained with manhole top Type 8.

DESIGN NOTES

1. Manhole top Type 8 should be specified in the plans when depths shown above can be maintained.

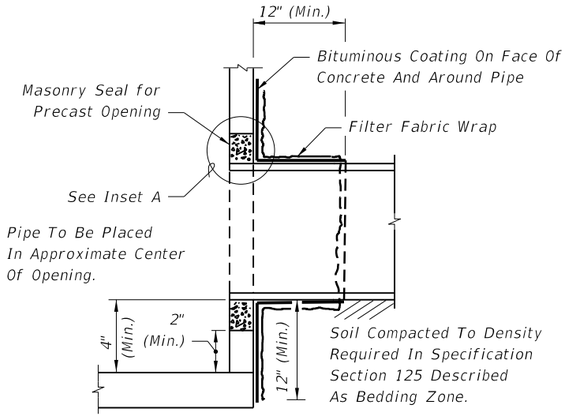

FILTER FABRIC WRAP ON GROUTED PIPE TO STRUCTURE JOINT

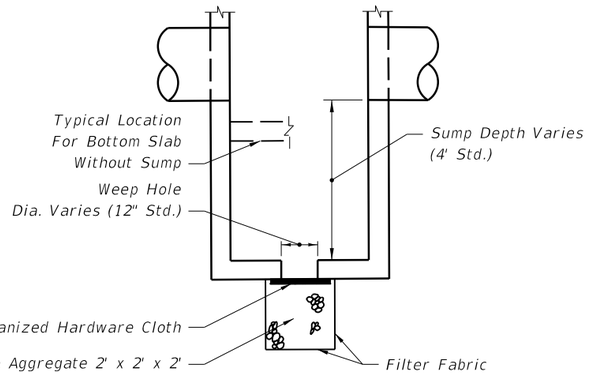

NOTE: Sump bottom appropriate for all manhole and inlet types. Sumps are to be constructed in inlet and manholes connected to French Drains unless excluded in the plans. At other locations, sump is to be constructed only where called for in the plans. Weep holes to be constructed in sump bottom only where called for in the plans. Cost of sump bottom and weep hole to be included in the contract unit price for inlet or manhole.

SUMP BOTTOM

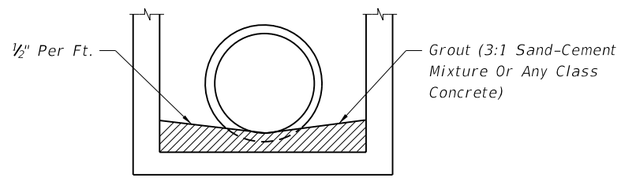

FOR ALL STRUCTURES UNLESS EXCLUDED BY SPECIAL DETAIL

ALL PIPE TYPES

DRAINAGE STRUCTURE INVERT

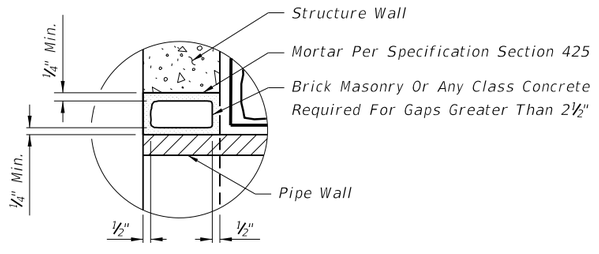

INSET A

C:\d\projects\standards\roadway\00200-s\00201-02.dgn
rd960rh
1:51:29 PM
6/28/2012

LAST REVISION	REVISION	DESCRIPTION:				
07/01/12			FDOT DESIGN STANDARDS 2013	SUPPLEMENTARY DETAILS FOR MANHOLES & INLETS	INDEX NO. 201	SHEET NO. 2

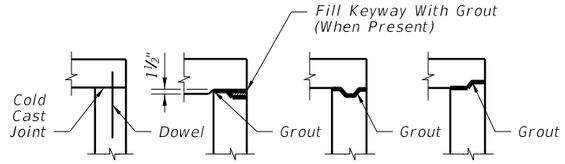

TOP SLABS TO WALLS

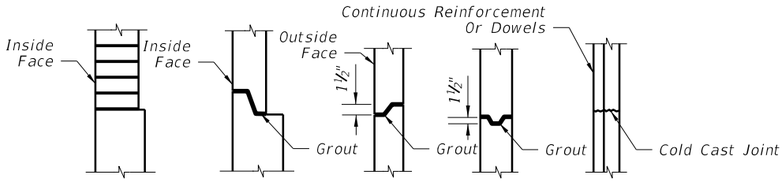

WALL JOINTS

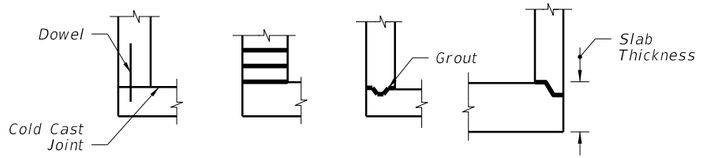

BOTTOM SLABS TO WALLS

1. One or more types of joints may be used in a single structure, except brick wall structure. Brick wall construction is permitted on circular units only.
2. All grouted joints are to have a maximum thickness of 1".
3. Keyways are to be a minimum of 1½" deep.
4. Joint dowels are to be #4 bars, 12" long with a minimum of 6 bars per joint approximately evenly spaced for circular structures or at maximum 12" spacing for rectangular structures. Bars may be either Adhesive Bonded Dowels in accordance with Specification Section 416, or placed approximately 6" into fresh concrete leaving the remainder to extend into the secondary cast. Welded wire fabric may be substituted for the dowel bar in accordance with the equivalent steel area table on Sheet 4.
5. Minimum cover on dowel reinforcing bars is 2" to outside face of structure.
6. Joints between wall segments and between wall segments and top or bottom slabs may be sealed either by preformed plastic gasket material using the procedures given in Section 430-7.3.1 of the Specifications or by non-shrink grout, in accordance with Section 934 of the Specifications.
7. Approved product inserts may be used in lieu of dowel embedment.

OPTIONAL CONSTRUCTION JOINTS

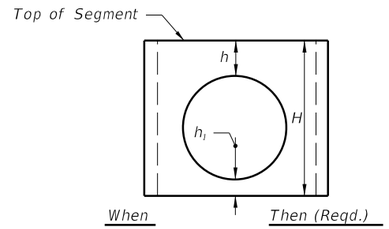

When	Then (Reqd.)
6" ≤ h_1 < 0.75H (min.)	h ≥ 0.4H
h_1 ≥ 0.75H (min.)	h ≥ H (min.)

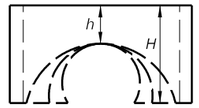

H (min.) ≤ h ≥ 0.4H

Segments may be inverted. Opening for pipe shall be the pipe OD plus 6" (± 2" tolerance). If h can not be attained, then a top or bottom slab must be attached to the segment as shown below.

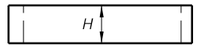

H ≥ H (min.)

Minimum Value For H	
H (min.)	Box Or Riser Diameter
1'-0"	3'-6" & 4'-0"
1'-6"	5'-0" & 6'-0"
2'-0"	>6'-0"

SEPARATE RISER SEGMENTS WITH CONSTRUCTION JOINTS OTHER THAN DOWEL OPTION

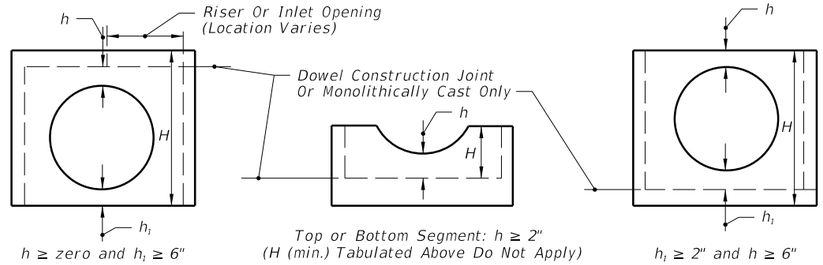

h ≥ zero and h_1 ≥ 6" | Top or Bottom Segment: h ≥ 2" (H (min.) Tabulated Above Do Not Apply) | h_1 ≥ 2" and h ≥ 6"

SEGMENTS FOR SLAB TO WALL DOWEL CONSTRUCTION JOINTS OR MONOLITHICALLY CAST SEGMENTS

NOTE: h may be less than 6" when approved by the Engineer, but not for inlet segments at finish grade elevation.

COMPARATIVE SIDE VIEWS

MINIMUM DIMENSIONS FOR BOX AND RISER SEGMENTS

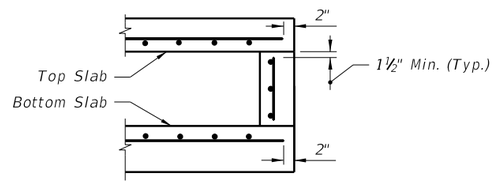

(NOTE: NOT APPLICABLE AROUND MANHOLE AND RISER OPENINGS)

REBAR STRAIGHT END EMBEDMENT FOR TOP AND BOTTOM SLABS

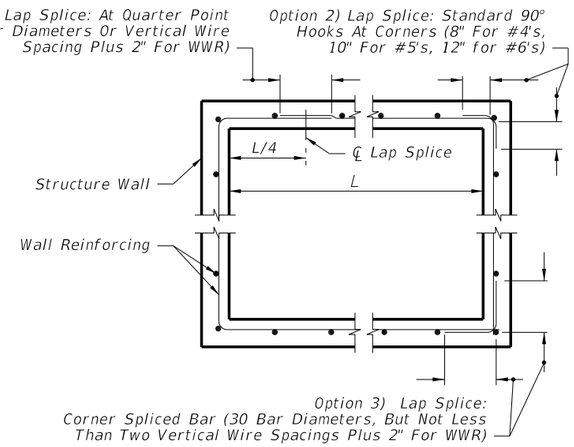

WALL REINFORCING SPLICE DETAILS

C:\d\projects\standards\roadway\00200-s\00201-03.dgn
rd960rh
1:51:31 PM
6/28/2012

EXAMPLE TABLE OF EQUIVALENT STEEL AREA

SCHEDULE	GRADE 60 REINFORCING BAR		EQUIVALENT GRADE 40 REINFORCING BAR		EQUIVALENT 65 KSI SMOOTH WELDED WIRE REINFORCEMENT		EQUIVALENT 70 KSI DEFORMED WELDED WIRE REINFORCEMENT	
	Bar Size & Spacing	Steel Area (in^2/ft)	Bar Size & Spacing	Min. Steel Area (in^2/ft)	Style Designation	Min. Steel Area (in^2/ft)	Style Designation	Min. Steel Area (in^2/ft)
A	#3 @ 6½" Ctrs. #4 @ 12" Ctrs.	0.20	#3 @ 4½" Ctrs. #4 @ 8" Ctrs. #5 @ 12" Ctrs.	0.30	3"x3"–W4.6xW4.6 4"x4"–W6.2xW6.2 6"x6"–W9.2xW9.2	0.1846	3"x3"–D4.3xD4.3 4"x4"–D5.7xD5.7 6"x6"–D8.6xD8.6	0.1714
B	#3 @ 5½" Ctrs. #4 @ 10" Ctrs.	0.24	#3 @ 3½" Ctrs. #4 @ 6½" Ctrs. #5 @ 10" Ctrs.	0.36	3"x3"–W5.5xW5.5 4"x4"–W7.4xW7.4 6"x6"–W11.1xW11.1	0.2215	3"x3"–D5.1xD5.1 4"x4"–D6.9xD6.9 6"x6"–D10.3xD10.3	0.2057
Special 1	#3 @ 5" Ctrs.. #4 @ 9" Ctrs.	0.267	#3 @ 3" Ctrs. #4 @ 6" Ctrs. #5 @ 9" Ctrs.	0.40	3"x3"–W6.2xW6.2 4"x4"–W8.2xW8.2 6"x6"–W12.3xW12.3	0.2465	3"x3"–D5.7xD5.7 4"x4"–D7.6xD7.6 6"x6"–D11.4xD11.4	0.2289
C	#3 @ 3½" Ctrs. #4 @ 6½" Ctrs. #5 @ 10" Ctrs.	0.37	#4 @ 4" Ctrs. #5 @ 6½" Ctrs. #6 @ 9½" Ctrs.	0.555	3"x3"–W8.5xW8.5 4"x4"–W11.4xW11.4 6"x6"–W17.1xW17.1	0.3415	3"x3"–D7.9xD7.9 4"x4"–D10.6xD10.6 6"x6"–D15.9xD15.9	0.3171
D	#4 @ 4½" Ctrs. #5 @ 7" Ctrs. #6 @ 10" Ctrs.	0.53	#4 @ 3" Ctrs. #5 @ 4½" Ctrs. #6 @ 6½" Ctrs.	0.795	3"x3"–W12.2xW12.2 4"x4"–W16.3xW16.3 6"x6"–W24.5xW24.5	0.4892	3"x3"–D11.4xD11.4 4"x4"–D15.1xD15.1 6"x6"–D22.7xD22.7	0.4543
E	#4 @ 3" Ctrs. #5 @ 5" Ctrs. #6 @ 7" Ctrs.	0.73	#5 @ 3½" Ctrs. #6 @ 4½" Ctrs. #7 @ 6½" Ctrs.	1.095	3"x3"–W16.8xW16.8 4"x4"–W22.5xW22.5 6"x6"–W33.7xW33.7	0.6738	3"x3"–D15.6xD15.6 4"x4"–D20.9xD20.9 6"x6"–D31.3xD31.3	0.6257
F	#5 @ 3½" Ctrs. #6 @ 5" Ctrs. #7 @ 7" Ctrs.	1.06	#6 @ 3" Ctrs. #7 @ 4½" Ctrs. #8 @ 6" Ctrs.	1.59	3"x3"–W24.5xW24.5 4"x4"–W32.6xW32.6 6"x6"–W48.9xW48.9	0.9785	3"x3"–D22.7xD22.7 4"x4"–D30.3xD30.3 6"x6"–D45.4xD45.4	0.9086
Special 2	#5 @ 3" Ctrs. #6 @ 4" Ctrs. #7 @ 5½" Ctrs.	1.24	#7 @ 4" Ctrs. #8 @ 5" Ctrs.	1.86	3"x3"–W28.6xW28.6 4"x4"–W38.2xW38.2 6"x6"–W57.2xW57.2	1.1446	3"x3"–D26.6xD26.6 4"x4"–D35.4xD35.4 6"x6"–D53.1xD53.1	1.0629
G	#6 @ 3½" Ctrs. #7 @ 5" Ctrs.	1.46	#7 @ 3" Ctrs. #8 @ 4" Ctrs.	2.19	3"x3"–W33.7xW33.7 4"x4"–W44.9xW44.9	1.3477	3"x3"–D31.3xD31.3 4"x4"–D41.7xD41.7	1.2514

GENERAL NOTES

1. For square or rectangular precast drainage structures, either deformed or smooth welded wire reinforcement may be used provided:

   a) The smooth welded wire reinforcement shall comply with ASTM A185 and deformed welded wire reinforcement shall comply with ASTM A497.

   b) Width and length of the unit is four times the spacing of the cross wires.

   c) Wire reinforcement shall be continuous around the box, and lapped in accordance with Option 1 or 3 as shown in the Wall Reinforcing Splice Details.

2. Horizontal steel in the walls of rectangular structures shall be lap spliced in accordance with Option 1, 2 or 3 as shown in the Wall Reinforcing Splice Details.

3. Welding of splices and laps is permitted. The requirements and restrictions placed on welding in AASHTO M259 shall apply.

4. Rebar straight end embedment of peripheral reinforcement may be used in lieu of ACI standard hooks for top and bottom slabs except when hooks are specifically called for in the plans or standard drawings.

5. Concrete as specified in ASTM C478, (4000 psi) may be used in lieu of Class II concrete in precast items manufactured in plants which meet the requirements of Section 449 of the Specifications.

6. Precast opening for pipe shall be the pipe OD plus 6" (± 2" tolerance). Mortar used to seal the pipe into the opening will be of such a mix that shrinkage will not cause leakage into or out of the structure. Dry-pack mortar may be used in lieu of brick and mortar construction to seal openings less than 2½" wide.

7. For pay item purposes, the height used to determine if a drainage structure is greater than 10 feet shall be computed using:
   a) the elevation of the top of the manhole lid,
   b) the grate elevation or the theoretical gutter grade elevation of an inlet, or
   c) the outside top elevation of a junction box less the flow line elevation of the lowest pipe or to top of sump floor.

NOTES FOR PRECAST OPTIONS & EQUIVALENT REINFORCEMENT SUBSTITUTION

1. Details for optional precast inlet construction up to depths of 15' are shown on the inlet indexes.

2. When precast units are used in conjunction with Alt. "B" Structure Bottoms, Index No. 200, the interior dimensions of an Alt. "B" Bottom can be adjusted to reflect these inlet interior dimensions.

3. Concrete which meets the requirements of ASTM C478 or Class IV must be used for precast structures constructed with 6" wall or slab thickness.

4. Reinforcement can be either deformed bar reinforcement or welded wire reinforcement. Bar reinforcement other than 60 ksi may be used, however only two grades are recognized; Grade 40 and Grade 60. Smooth welded wire reinforcement, will be recognized as having a design strength of 65 ksi and deformed welded wire reinforcement will be recognized as having a design strength of 70 ksi. The area of reinforcement required may be adjusted in accordance with the Equivalent Steel Area Table provided. For bars and spacings not given, the steel area required can be determined by the following equations:

   Grade 40 Steel Area = $A_s40 = \frac{60}{40} \times A_s60$

   Smooth Welded Wire Reinforcement Steel Area = $A_s65 = \frac{60}{65} \times A_s60$

   Deformed Welded Wire Reinforcement Steel Area = $A_s70 = \frac{60}{70} \times A_s60$

continued...

When a reduced area of reinforcement is provided, any maximum bar spacing shown must also be reduced as determined by the following equations, unless otherwise shown:

Max. Grade 40 Bar Spacing = Grade 60 Bar Spacing
Max. Smooth Welded Wire Spacing = Grade 60 Bar Spacing x 0.86
Max. Deformed Welded Wire Spacing = Grade 60 Bar Spacing x 0.74

When an increased area of reinforcing is provided, then the maximum bar spacing may be increased by the squared ratio of increased steel area, but not to exceed 12":

$$\text{Max. Bar Spacing Provided} \le \text{Max. Bar Spacing Required} \times \left(\frac{\text{Steel Area Provided}}{\text{Min. Steel Area Required}}\right)^2$$

In no case will reinforcement with wires smaller than W3.1 or D3.1, or spacings greater than 8" be permitted. Bar reinforcement shall show the minimum yield designation grade mark or either the number 60 or one (1) grade mark line to be acceptable at the higher value. Maximum bar spacing shall not be greater than two (2) times the slab thickness with a maximum spacing of 12" or three (3) times the wall thickness, with a maximum spacing of 18" for vertical bars and 12" for horizontal bars. Wires smaller than W3.1 or D3.1 are permitted in the walls of ASTM C 478 round structure bottoms and round risers.

C:\d\projects\standards\roadway\00200-s\00201-04.dgn rd960rh 1:51:33 PM 6/28/2012

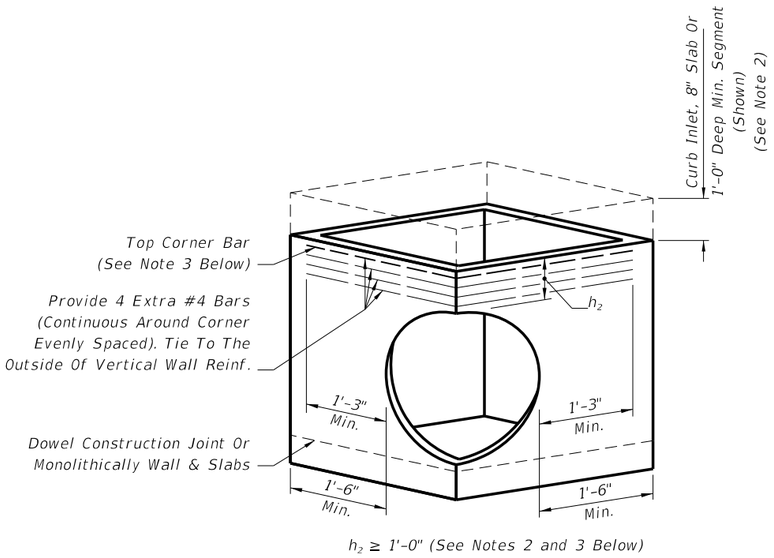

$h_2 \geq$ 1'-0" (See Notes 2 and 3 Below)

DESIGNER NOTE: Use only when round structures are not practical, engineer of record approval required.

PICTORIAL VIEW

NOTE: 1. Submit Shop Drawings of corner openings for approval by the Engineer of Record.

2. h_2 may be less than 1'-0" when a minimum 1'-0" deep segment, 8" slab or curb inlet is provided above the corner opening.

3. For inlet segments at finish grade elevation substitute a #8 Bar for the top corner bar when 1'-0" $\leq h_2 <$ 2'-0".

RECTANGULAR SEGMENT WITH
PIPE OPENING AT CORNER

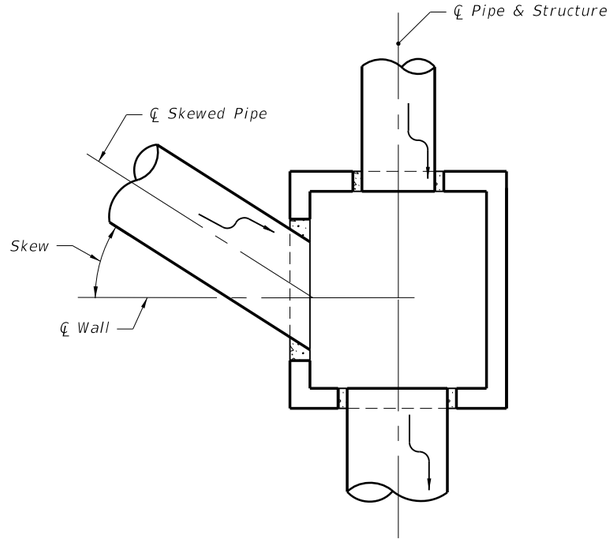

PLAN VIEW FOR SKEWS ≤ 45°
(Not Centered)

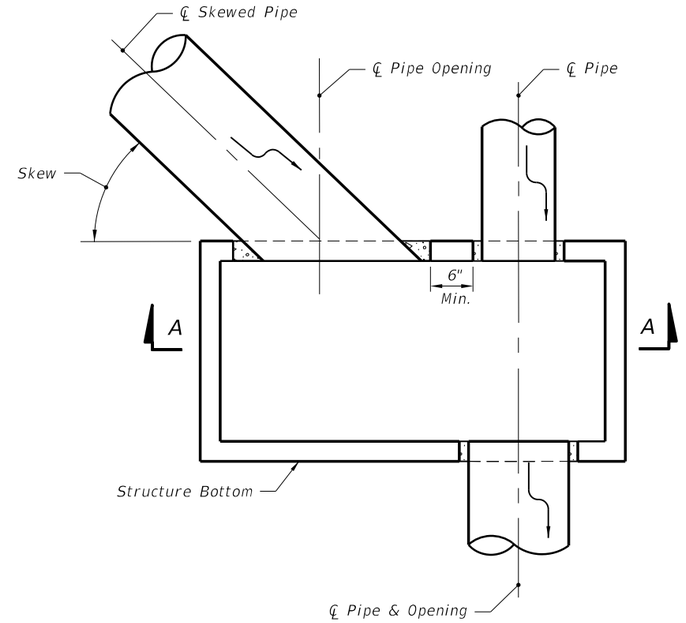

PLAN VIEW FOR SKEWS > 45°
(Not Centered)

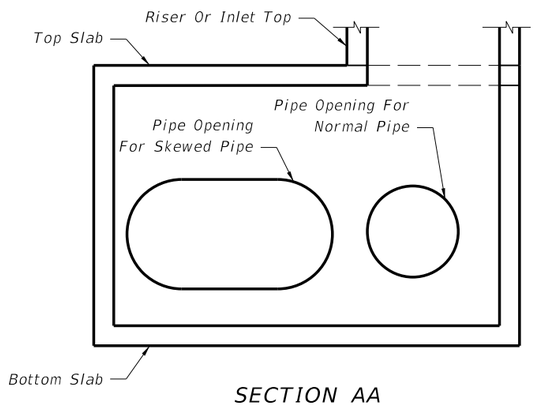

SECTION AA

(Pipes Not Shown For Clarity)

DETAILS FOR SKEWED PIPES IN
RECTANGULAR STRUCTURES

C:\d*\projects\standards\roadway\00200-s\00201-05.dgn
rd960rh
1:51:36 PM
6/28/2012

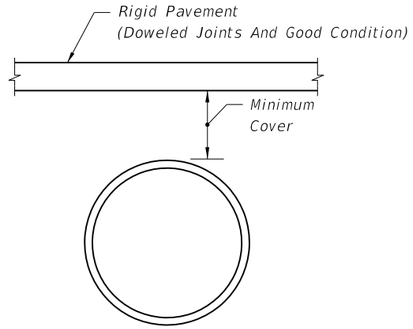

RIGID PAVEMENT

PIPE TYPE/SIZE & SHAPE	MINIMUM COVER
CONCRETE (See Note 6)	
Round & Elliptical	9"
CORRUGATED STEEL	
15"–72" Round & Arch Equiv.	9"
78" & Larger Round & Arch Eq.	15"
CORRUGATED ALUMINUM	
15"–72" Round & Arch Equiv.	9"
78"–102" Round & Arch Equiv.	15"
108" & Larger Round	18"
CORRUGATED POLYETHYLENE	
15"–60" Round	9"
POLYVINYL CHLORIDE	
15"–36" Round	9"

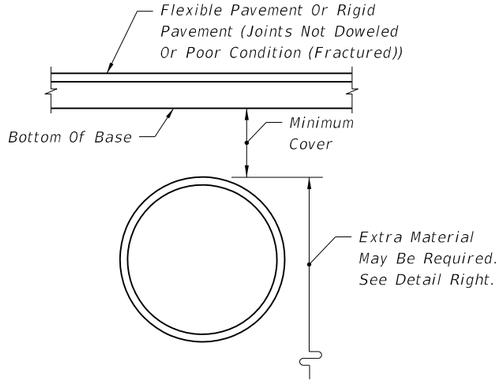

FLEXIBLE PAVEMENT

PIPE TYPE/SIZE & SHAPE	MINIMUM COVER
CONCRETE (See Note 6)	
Round & Elliptical	7"
CORRUGATED STEEL	
12"–30" Round	12" [12"]
36"–48" Round	18" (12") [15"]
54"–72" Round	21" (15") [18"]
78"–96" Round	(18") [27"]
102" & Larger Round	(24") [33"]
15"–30" Arch Equiv.	18" [18"]
36"–48" Arch Equiv.	24" (12") [18"]
54"–72" Arch Equiv.	27" (15") [24"]
78"–96" Arch Equiv.	(18") [30"]
102" & Larger Arch Equiv.	(24")
CORRUGATED ALUMINUM	
12"–24" Round	15" [12"]
30"–48" Round	18" (12") [18"]
54"–72" Round	24" (18") [24"]
78"–102" Round	(24") [30"]
108" & Larger	(30")
15"–24" Arch Equiv.	24" [21"]
30"–48" Arch Equiv.	27" (15") [24"]
54"–72" Arch Equiv.	30" (18") [27"]
78"–90" Arch Equiv.	(24") [30"]
96"–102" Arch Equiv.	(30")
CORRUGATED POLYETHYLENE	
15"–60" Round	15"
POLYVINYL CHLORIDE	
15"–36" Round	15"

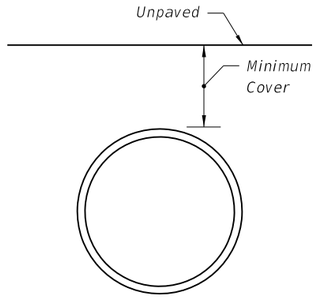

UNPAVED

PIPE TYPE/SIZE & SHAPE	MINIMUM COVER	
	COMMERCIAL	NON-COMMERCIAL
CONCRETE (See Note 6)		
Round & Elliptical	12"	3"
CORRUGATED STEEL		
12"–30" Round	18" [15"]	12" [12"]
36"–48" Round	18" (12") [15"]	12" (12") [12"]
54"–72" Round	18" (12") [15"]	15" (12") [12"]
78"–96" Round	(18") [27"]	(12") [12"]
102" & Larger Round	24" [33"]	18" [21"]
15"–30" Arch Equiv.	18" [18"]	12" [12"]
36"–48" Arch Equiv.	24" (12") [21"]	18" (12") [15"]
54"–72" Arch Equiv.	30" (18") [24"]	24" (12") [18"]
78"–96" Arch Equiv.	(24") [27"]	(18") [21"]
102" & Larger Arch Equiv.	(30")	(24")
CORRUGATED ALUMINUM		
12"–24" Round	21" [21"]	15" [15"]
30"–48" Round	24" (18") [21"]	18" (12") [15"]
54"–72" Round	30" (24") [27"]	24" (18") [21"]
78"–102" Round	(30") [33"]	(24") [27"]
108" & Larger	36"	30"
15"–24" Arch Equiv.	27" [24"]	24" [21"]
30"–48" Arch Equiv.	33" (21") [27"]	27" (15") [21"]
54"–72" Arch Equiv.	36" (24") [30"]	30" (18") [24"]
78"–90" Arch Equiv.	(30") [36"]	(24") [30"]
96"–102" Arch Equiv.	(36")	(30")
CORRUGATED POLYETHYLENE		
15"–60" Round	21"	15"
POLYVINYL CHLORIDE		
15"–36" Round	21"	15"

MINIMUM COVER FOR CONCRETE, STEEL, ALUMINUM, POLYETHYLENE AND POLYVINYL CHLORIDE PIPE

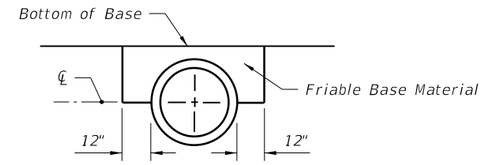

The cost of furnishing and installing the extra base material shall be included in the cost of the culvert.

FRIABLE BASE

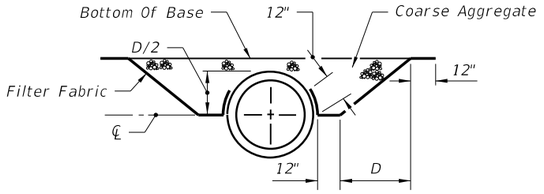

The coarse aggregate shall be placed in 6 inch lifts and compacted sufficiently as to be firm and unyielding. The coarse aggregate shall be gravel or stone meeting the requirements of Standard Specification Sections 901–2 or 901–3 respectively. The gradation shall meet Section 901–1.4, Grades 4, 467, 5, 56, or 57 unless restricted in the plans. The filter fabric shall be Type D–3 (See Index No. 199). The cost of furnishing and installing the coarse aggregate and filter fabric shall be included in the cost of the culvert.

ASPHALTIC CONCRETE BASE

Note: *Extra material is required when cross culverts are located on facilities subject to high speed traffic (≥ 55 mph) or high traffic volumes (> 1600 ADT) and the cover is less than 12 inches for concrete pipe, 15 inches for corrugated steel pipe, and 18 inchesfor corrugated aluminum pipe, corrugated polyethylene and corrugated polyvinyl chloride pipe.*

EXTRA MATERIAL FOR CROSS CULVERTS UNDER FLEXIBLE PAVEMENTS

GENERAL NOTES

1. *The tabulated values are recommended minimum dimensions to withstand anticipated highway traffic loads. Additional cover may be required to support construction equipment loads or highway traffic loads before pavement is completed. Some size thickness combinations may require minimum cover greater than those listed above. See Sheets 2, 3, & 4.*
2. *Less than the tabulated minimum cover may be used provided suitable method(s) are detailed in the plans.*
3. *Values shown in parenthesis () are for 3" x 1" corrugations which must be specified to utilize the lesser cover.*
4. *The tabulated values in the brackets [] apply to Type 1–R (Spiral Rib) pipe which must be specified to utilize the lesser cover.*
5. *Commercial and noncommercial refers to typical vehicular utilization of unpaved roads and drives where rutting and cover displacement may occur.*
6. *For Pipe Class S with diameters of 12" to 30", the minimum height of fill measured from top of finished grade to outside top of pipe is 3 feet.*

C:\d\projects\standards\roadway\00200-s\00205-01.dgn
rd960rh
1:51:38 PM
6/28/2012

LAST REVISION	REVISION	DESCRIPTION:				
07/01/07			FDOT DESIGN STANDARDS 2013	COVER HEIGHT	INDEX NO. 205	SHEET NO. 1

ROUND PIPE DIMENSIONS

Equiv. Dia. (In.)	Area (Sq. Ft.)	Wall Thickness (In.)* CLASSES II, III, IV, V B WALL
12	0.8	2
15	1.2	2¼
18	1.8	2½
24	3.1	3
30	4.9	3½
36	7.1	4
42	9.6	4½
48	12.6	5
54	15.9	5½
60	19.6	6
66	23.8	6½
72	28.3	7
78	33.2	7½
84	38.5	8
90	44.4	8½
96	50.3	9
102	56.7	9½
108	63.7	10
114	70.9	—
120	78.5	—

* For Informational Purposes Only.
Do Not Specify Wall Thickness.
Option B Wall Is Industry Standard.

ELLIPTICAL PIPE DIMENSIONS

Nominal Dimensions				Equiv. Dia. (In.)	Area (Sq.Ft.)	Wall Thickness (In.)
Horiz.		Vert.				
Rise (In.)	Span (In.)	Rise (In.)	Span (In.)			Classes HE II, III, IV VE II, III, IV
NA	NA	NA	NA	12	NA	NA
12	18	18	12	15	1.3	2½
14	23	23	14	18	1.8	2¾
19	30	30	19	24	3.3	3¼
24	38	38	24	30	5.1	3¾
29	45	45	29	36	7.4	4½
34	53	53	34	42	10.2	5
38	60	60	38	48	12.9	5½
43	68	68	43	54	16.6	6
48	76	76	48	60	20.5	6½
53	83	83	53	66	24.8	7
58	91	91	58	72	29.5	7½
63	98	98	63	78	34.6	8
68	106	106	68	84	40.1	8½
72	113	113	72	90	46.1	9
77	121	121	77	96	52.4	9½
82	128	128	82	102	59.2	10
87	136	136	87	108	66.4	10½
92	143	143	92	114	74.0	11
97	151	151	97	120	82.0	11½

For Informational Purposes Only

ROUND PIPE INSTALLATIONS

PIPE DIAMETER	Maximum Height of Fill (ft.)					
	Class S	Class I	Class II	Class III	Class IV	Class V
12"–30"	9	13	17	24	36	55
36"–54"	8	12	16	22	34	52
60"–78"	7	11	15	21	33	51
84"–96"	6	10	14	20	32	49

Pipe Class S	D-Load=600 Lbs./Ft./Ft. (0.01" Crack) D-Load=900 Lbs./Ft./Ft. (Ultimate)
Pipe Class I	D-Load=800 Lbs./Ft./Ft. (0.01" Crack) D-Load=1200 Lbs./Ft./Ft. (Ultimate)
Pipe Class II	D-Load=1000 Lbs./Ft./Ft. (0.01" Crack) D-Load=1500 Lbs./Ft./Ft. (Ultimate)
Pipe Class III	D-Load=1350 Lbs./Ft./Ft. (0.01" Crack) D-Load=2000 Lbs./Ft./Ft. (Ultimate)
Pipe Class IV	D-Load=2000 Lbs./Ft./Ft. (0.01" Crack) D-Load=3000 Lbs./Ft./Ft. (Ultimate)
Pipe Class V	D-Load=3000 Lbs./Ft./Ft. (0.01" Crack) D-Load=3750 Lbs./Ft./Ft. (Ultimate)

Note: At the option of the pipe supplier or the contractor, a Pipe Class with greater strength may be substituted for the Pipe Class designated in the plans.

ELLIPTICAL PIPE INSTALLATIONS (All Sizes)

Installation	Maximum Height Of Fill (Ft.)	Pipe Class	Bedding Class
Horizontal	1–6* 7–10 11–16 17+	HE II* HE III HE IV Special Design	C C C Modified
Vertical	1–6* 7–10 11–16 17+	VE II* VE III VE IV Special Design	C C C Modified

Pipe Class HE II And VE II	D-Load=1000 Lbs./Ft./Ft. (0.01" Crack) D-Load=1500 Lbs./Ft./Ft. (Ultimate)
Pipe Class HE III And VE III	D-Load=1350 Lbs./Ft./Ft. (0.01" Crack) D-Load=2000 Lbs./Ft./Ft. (Ultimate)
Pipe Class HE IV And VE IV	D-Load=2000 Lbs./Ft./Ft. (0.01" Crack) D-Load=3000 Lbs./Ft./Ft. (Ultimate)

* Note: HE III and VE III pipe required for depths of cover less than 2' for 15", 18" and 24" equivalent.

PIPE DIMENSIONS CONCRETE PIPE

MAXIMUM COVER HEIGHTS CONCRETE PIPE

Note: Height of fill (maximum cover) is measured from top of finished grade to outside top of pipe.

POLYETHYLENE PIPE

DIAMETER	HEIGHT OF MAXIMUM FILL (Ft.)
12"–60"	17'

POLYVINYL CHLORIDE PIPE

DIAMETER	HEIGHT OF MAXIMUM FILL (Ft.)
12"–36"	17'

MAXIMUM COVER FOR PLASTIC PIPE

6/28/2012 1:51:40 PM rd960rh C:\d\projects\standards\roadway\00200-s\00205-02.dgn

ROUND PIPE - 2⅔" x ½" CORRUGATION

D (In.)	Area (Sq. Ft.)	Maximum Height Of Fill (Ft.) Sheet Thickness In Inches (Gage) 0.064 (16)	0.079 (14)	0.109 (12)	0.138 (10)	0.168 (8)	Min. Cover (Ft.)
12	0.79	100+	100+	NA	NA	NA	See Sheet 1 of 6
15	1.23	100+	100+	NA	NA	NA	
18	1.77	100+	100+	100+	NA	NA	
21	2.40	100+	100+	100+	NA	NA	
24	3.14	100+	100+	100+	NA	NA	
30	4.91	85	100+	100+	NA	NA	
36	7.1	71+	88	100+	100+	NA	
42	9.6	60+	76	100+	100+	NA	
48	12.6	53	66	93	100+	100+*	
54	16.0	NS	59	82	100+	100+*	
60	19.6	NS	NS	74	95	100+*	
66	23.8	NS	NS	NS	87	100+*	
72	28.3	NS	NS	NS	79	97*	
78	33.2	NS	NS	NS	NS	90*	
84	38.5	NS	NS	NS	NS	83*	

ROUND PIPE - 3" x 1" CORRUGATION

D (In.)	Area (Sq. Ft.)	Maximum Height Of Fill (Ft.) Sheet Thickness In Inches (Gage) 0.064 (16)	0.079 (14)	0.109 (12)	0.138 (10)	0.168 (8)	Min. Cover (Ft.)
36	7.1	81	100+	100+	NA	NA	See Sheet 1 of 6
42	9.6	70	87	100+	NA	NA	
48	12.6	61	76	100+	100+	NA	
54	16.0	54	68	95	100+	NA	
60	19.6	48	61	85	100+	NA	
66	23.8	44	55	78	100	100+*	
72	28.3	40	51	71	91	100+*	
78	33.2	37	47	66	84	100+*	
84	38.5	35	43	61	78	100+*	
90	44.2	32	40	57	73	90*	
96	50.3	NS	38	53	68	84*	
102	56.7	NS	36	50	64	79*	
108	63.6	NS	NS	47	61	75*	
114	70.9	NS	NS	45	58	71*	
120	78.5	NS	NS	42	55	67*	
132	95.0	NS	NS	NS	50	61*	

ROUND PIPE - 5" x 1" CORRUGATION ③

D (In.)	Area (Sq. Ft.)	Maximum Height Of Fill (Ft.) Sheet Thickness In Inches (Gage) 0.064 (16)	0.079 (14)	0.109 (12)	0.138 (10)	0.168 (8)	Min. Cover (Ft.)
36	7.1	72	90	100+	NA	NA	See Sheet 1 of 6
42	9.6	62	77	100+	NA	NA	
48	12.6	54	68	95	100+	NA	
54	16.0	48	60	84	100+	NA	
60	19.6	43	54	76	98	NA	
66	23.8	39	49	69	89	100+*	
72	28.3	36	45	63	81	100*	
78	33.2	33	41	58	75	92*	
84	38.5	31	38	54	70	85*	
90	44.2	29	36	50	65	80*	
96	50.3	NS	34	47	61	75*	
102	56.7	NS	32	44	57	70*	
108	63.6	NS	NS	42	54	66*	
114	70.9	NS	NS	40	51	63*	
120	78.5	NS	NS	38	49	60*	
132	95.0	NS	NS	NS	44	54*	

Notes:

Increase the minimum cover values shown on Sheet 1 of 6 by 6" for gage and size combinations below the heavy lines.

Height of fill (maximum cover) is measured from top of finished grade to outside of pipe.

* Recorrugated end not available. May be considered for cross drain and side drain applications only.
NA–Not Available
NS–Not Suitable (For Highway H–20 or HS–20 Loadings)

① Limited availability of this product. Check availability before specifying (generally limited to 3" x 1" corrugation pipe arch fabricated from 60" and smaller diameter round pipe in 12 ga. and thicker material).

② 360° perforated pipe arch (french drain pipe) is not recommended. Do not specify without checking suitability and availability.

③ 5" x 1" corrugated pipe is currently not manufactured for the Florida market. Check availability before specifying.

PIPE ARCH: SPIRAL RIB: ¾"x¾"x7½" RIB SPACING
PIPE ARCH: SPIRAL RIB: ¾"X1"X11½" RIB SPACING
PIPE ARCH - 2⅔"x½" CORRUGATION

Span (In.)	Rise (In.)	Equiv. Round Pipe (In.)	Area (Ft.²)	Minimum Sheet Thickness Required (In.) (Ga.)	Maximum Height Of Fill (Ft.) Maximum Corner Pressure Lbs./Ft.² 4000	6000	Min. Cover (Ft.)
17	13	15	1.1	0.064 (16)	12	14	See Sheet 1 of 6
21	15	18	1.6	0.064 (16)	10	14	
24	18	21	2.2	0.064 (16)	7	13	
28	20	24	2.9	0.064 (16)	5	11	
35	24	30	4.5	0.064 (16)	NS	7	
42	29	36	6.5	0.064 (16)	NS	7	
49	33	42	8.9	0.079 (14)	NS	6	
57	38	48	11.6	0.109 (12)	NS	8	
64	43	54	14.7	0.109 (12)	NS	9	
71	47	60	18.1	0.138 (10)	NS	10	
77	52	66	21.9	0.168 (8)*	5	10	
83	57	72	26.0	0.168 (8)*	5	10	

PIPE ARCH-3" x 1" ①②③ and 5" x 1" ②③ CORR.

Span (In.)	Rise (In.)	Equiv. Round Pipe (In.)	Area (Ft.²)	Minimum Sheet Thickness Required (In.) (Ga.)	Maximum Height Of Fill (Ft.) Maximum Corner Pressure Lbs./Ft.² 4000	6000	Min. Cover (Ft.)
40	31	36	7.0	0.079 (14)	8	12	See Sheet 1 of 6
46	36	42	9.4	0.079 (14)	8	13	
53	41	48	12.3	0.079 (14)	8	13	
60	46	54	15.6	0.079 (14)	8	13	
66	51	60	19.3	0.079 (14)	9	13	
73	55	66	23.2	0.079 (14)	11	16	
81	59	72	27.4	0.079 (14)	11	17	
87	63	78	32.1	0.079 (14)	10	16	
95	67	84	37.0	0.079 (14)	11	17	
103	71	90	42.4	0.109 (12)	10	15	
112	75	96	48.0	0.109 (12)	10	16	
117	79	102	54.2	0.109 (12)	10	15	
128	83	108	60.5	0.138 (10)	9	14	
137	87	114	67.4	0.138 (10)	8	13	
142	91	120	74.5	0.168 (8)	7	12	

ROUND PIPE - SPIRAL RIB
RIB SPACING (¾"x¾"x7½") or (¾"x1"x11½")

D (In.)	Area (Sq. Ft.)	Maximum Height Of Fill (Ft.) Sheet Thickness In Inches (Gage) 0.064 (16)	0.079 (14)	0.109 (12)	0.138 (10)	0.168 (8)	Min. Cover (Ft.)
12	0.79	NA	NA	NA	NA	NA	See Sheet 1 of 6
15	1.23	NA	NA	NA	NA	NA	
18	1.77	68	72	NA	NA	NA	
21	2.40	58	62	100+	NA	NA	
24	3.14	51	72	100+	100+	NA	
30	4.91	41	58	97	100+	NA	
36	7.1	34	48	81	100+	NA	
42	9.6	29	41	69	100+	NA	
48	12.6	26	36	61	100+	NA	
54	16.0	23	32	54	91	NA	
60	19.6	NS	29	49	83	NA	
66	23.8	NS	26	44	74	NA	
72	28.3	NS	24	40	67	NA	
78	33.2	NS	NS	37	59	NA	
84	38.5	NS	NS	35	54	NA	
90	44.2	NS	NS	32	48	NA	
96	50.3	NS	NS	30	45	NA	
102	56.7	NS	NS	29	40	NA	
108	63.6	NS	NS	27 Ⓐ	36	NA	

Ⓐ = ¾" x 1" x 11½" Only

MAXIMUM COVER FOR CORRUGATED STEEL PIPE ROUND AND PIPE ARCH

ROUND PIPE - 2⅔" x ½" CORRUGATION

D (In.)	Area (Sq. Ft.)	Maximum Height Of Fill (Ft.) Sheet Thickness In Inches (Gage) 0.060 (16)	0.075 (14)	0.105 (12)	0.135 (10)	0.164 (8)	Min. Cover (Ft.)
12	0.8	90	100+	NA	NA	NA	See Sheet 1 of 6
15	1.2	72	90	NA	NA	NA	
18	1.8	59	75	100+	NA	NA	
21	2.4	52	65	92	NA	NA	
24	3.1	44	56	79	NA	NA	
30	4.9	35 DR	44	63	NA	NA	
36	7.1	NS	36 DR	52	68	NA	
42	9.6	NS	NS	44 DR	58	NA	
48	12.6	NS	NS	38 DR	50 DR	61	
54	15.9	NS	NS	34 DR	45 DR	54 DR	
60	19.6	NS	NS	NS	39 DR	49 DR	
66	23.8	NS	NS	NS	NS	44 DR	
72	28.3	NS	NS	NS	NS	40 DR	

ROUND PIPE - 3" x 1" CORRUGATION

D (In.)	Area (Sq. Ft.)	Maximum Height Of Fill (Ft.) Sheet Thickness In Inches (Gage) 0.060 (16)	0.075 (14)	0.105 (12)	0.135 (10)	0.164 (8)	Min. Cover (Ft.)
36	7.1	33	42	60	NA	NA	See Sheet 1 of 6
42	9.6	28	36	51	NA	NA	
48	12.6	24	31	45	58	NA	
54	15.9	21	28	39	51	NA	
60	19.6	19	24	35	46	NA	
66	23.8	15 DR	22	32	42	51	
72	28.3	NS	20 DR	29	38	47	
78	33.2	NS	15 DR	27	35	43	
84	38.5	NS	NS	24 DR	32	40	
90	44.2	NS	NS	23 DR	30	37	
96	50.3	NS	NS	21 DR	28 DR	34	
102	56.7	NS	NS	NS	26 DR	32	
108	63.6	NS	NS	NS	24 DR	30 DR	
114	70.9	NS	NS	NS	NS	28 DR	
120	78.5	NS	NS	NS	NS	27 DR	

ROUND PIPE - SPIRAL RIB
RIB SPACING (¾" x ¾" x 7½")

D (In.)	Area (Sq. Ft.)	Maximum Height Of Fill (Ft.) Sheet Thickness In Inches (Gage) 0.060 (16)	0.075 (14)	0.105 (12)	0.135 (10)	0.164 (8)	Min. Cover (Ft.)
12	0.79	NA	NA	NA	NA	NA	See Sheet 1 of 6
15	1.23	63 ①	87 ①	NA	NA	NA	
18	1.77	55	76	NA	NA	NA	
21	2.40	47	65	NA	NA	NA	
24	3.14	41	57	NA	NA	NA	
30	4.91	33 DR	45	73	NA	NA	
36	7.1	27 ④	38 DR	61	NA	NA	
42	9.6	NS	32 ④	52	NA	NA	
48	12.6	NS	NS	46	65	NA	
54	16.0	NS	NS	40 DR	57	NA	
60	19.6	NS	NS	36 ④	52	NA	
66	23.8	NS	NS	NS	47 DR	NA	
72	28.3	NS	NS	NS	43 ④	NA	
78	33.2	NS	NS	NS	39 ④	NA	
84	38.5	NS	NS	NS	34 ④	NA	
90	44.2	NS	NS	NS	30 ①③④	NA	
96	50.3	NS	NS	NS	27 ①③④	NA	

▨ – Note:

Special installation required. Refer to AASHTO Standard Specifications for Highway Bridges or ASTM B788-88 and manufacturer's recommendations.

PIPE ARCH - 2⅔" x ½" CORRUGATION ②

Span (In.)	Rise (In.)	Equiv. Round Pipe (In.)	Area (Sq. Ft.)	Minimum Sheet Thickness Required (In.) (Ga.)	Maximum Height Of Fill (Ft.) Maximum Corner Pressure-Lbs./Sq.Ft. 4000	6000	Min. Cover (Ft.)
17	13	15	1.1	0.060 (16)	12	15	See Sheet 1 of 6
21	15	18	1.6	0.060 (16)	10	14	
24	18	21	2.2	0.060 (16)	7	13	
28	20	24	2.9	0.075 (14)	5	11	
35	24	30	4.5	0.075 (14)	NS	7	
42	29	36	6.5	0.105 (12)	NS	7	
49	33	42	8.9	0.105 (12)	NS	6	
57	38	48	11.6	0.135 (10)	NS	8	
64	43	54	14.7	0.135 (10)	NS	9	
71	47	60	18.1	0.164 (8)	NS	10	
77	52	66	21.9	0.164 (8)	NS	10	
83	57	72	26.0	0.164 (8)	NS	10	

PIPE ARCH - 3" x 1" CORRUGATION ①②

Span (In.)	Rise (In.)	Equiv. Round Pipe (In.)	Area (Sq. Ft.)	Minimum Sheet Thickness Required (In.) (Ga.)	Maximum Height Of Fill (Ft.) Maximum Corner Pressure-Lbs./Sq.Ft. 4000	6000	Min. Cover (Ft.)
40	31	36	7.0	0.060 (16)	8	12	See Sheet 1 of 6
46	36	42	9.4	0.060 (16)	8	13	
53	41	48	12.3	0.060 (16)	8	13	
60	46	54	15.6	0.075 (14)	8	13	
66	51	60	19.3	0.075 (14)	8	13	
73	55	66	23.2	0.105 (12)	11	16	
81	59	72	27.4	0.105 (12)	11	17	
87	63	78	32.1	0.105 (12)	10	16	
95	67	84	37.0	0.105 (12)	11	17	
103	71	90	42.4	0.135 (10)	10	15	
112	75	96	48.0	0.135 (10)	10	16	
117	79	102	54.2	0.164 (8)	10	15	

PIPE ARCH - SPIRAL RIB
RIB SPACING (¾" x ¾" x 7½")

Span (In.)	Rise (In.)	Equiv. Round Pipe (In.)	Area (Sq. Ft.)	Minimum Sheet Thickness Required (In.) (Ga.)	Maximum Height Of Fill (Ft.) Maximum Corner Pressure-Lbs./Sq.Ft. 4000	6000	Min. Cover (Ft.)
16	14	15	1.2	0.060 (16)	12	13	See Sheet 1 of 6
20	16	18	1.7	0.060 (16)	10	12	
23	19	21	2.3	0.060 (16)	7	11	
27	21	24	3.0	0.060 (16)	5	10	
33	26	30	4.7	0.075 (14)	NS	9	
40	31	36	7.0	0.075 (14)	NS	8	
46	36	42	9.4	0.105 (12)	NS	8	
53	41	48	12.3	0.105 (12)	NS	8	
60	46	54	15.6	0.105 (10)	NS	8	
66	51	60	19.3	0.135 (10)	NS	8	
73	55	66	23.2	0.135 (10) ④	NS	8	
81	59	72	27.4	0.135 (10) ④	NS	8	

MAXIMUM COVER FOR CORRUGATED ALUMINUM ALLOY ROUND PIPE AND PIPE ARCH

Notes:

Increase the minimum cover values shown on Sheet 1 of 6 by 6" for gage and size combinations below the heavy lines.

Height of fill (maximum cover) is measured from top of finished grade to outside top of pipe.

NA– Not Available

NS– Not Suitable (For Highway H-20 or HS-20 Loadings)

DR– Design Review is recommended for each specific application. The review should identify any special handling, installation, backfill procedures, and construction load restrictions which may be required. (The review performed by the designer does not relieve the contractor from analyzing and taking any necessary precautions required to protect partially or completely constructed pipe from the equipment used during construction.)
(NOTE: The DESIGNER may use a thicker gage in lieu of the Design Review.)

① *Limited availability of this product. Check availability before specifying.*

② *360° perforated pipe (french drain pipe) is not recommended in the pipe arch shape. Do not specify without checking both for suitability and availability.*

③ *This size and gage combination must be strutted during installation per manufacturer's recommendations. Extra care will be required during handling and installation.*

④ *Use of this size and gage combination must be approved by the State Drainage Engineer.*

C:\d\projects\standards\roadway\00200-s\00205-04.dgn rd960rh 1:51:45 PM 6/28/2012

Aluminum Structural Plate
Height of Cover Limits*
Combination Metal Thickness, Reinforcing Rib Type, and Rib Spacing
Arch Shape- HS 20 Live Load

Span (Ft.-In.)	Rise (Ft.-In.)	Area (Sq.Ft.)	Minimum Height of Cover (Ft.) 1.00	1.50	2.00	2.50	3.00	3.50
5-0	1-9 2-3 2-7	7 9 10	0.125 (45)	0.100 (31)	0.100 (31)	0.100 (31)	0.100 (31)	0.100 (31)
6-0	1-10 2-4 2-9 3-2	8 10 13 15	0.125-II-18 (37)	0.100 (25)	0.100 (25)	0.100 (25)	0.100 (25)	0.100 (25)
7-0	2-4 2-10 3-3 3-8	12 15 18 20	0.125-II-18 (32)	0.100 (22)	0.100 (22)	0.100 (22)	0.100 (22)	0.100 (22)
8-0	2-11 3-4 4-2	17 20 26	0.125-II-9 (28)	0.150 (37)	0.100 (19)	0.100 (19)	0.100 (19)	0.100 (19)
9-0	2-11 3-10 4-8	19 26 33	0.125-IV-9 (25)	0.125-II-18 (25)	0.100 (17)	0.100 (17)	0.100 (17)	0.100 (17)
10-0	3-6 4-5 5-2	25 33 41	0.125-IV-9 (22)	0.125-II-18 (22)	0.125 (22)	0.100 (15)	0.100 (15)	0.100 (15)
11-0	3-6 4-6 5-8	28 37 50	0.175-IV-9 (32)	0.125-II-18 (20)	0.125-II-27 (20)	0.100 (14)	0.100 (14)	0.100 (14)
12-0	4-1 5-0 6-3	35 45 59		0.125-IV-18 (18)	0.125-II-27 (18)	0.125 (18)	0.100 (12)	0.100 (12)
13-0	4-1 5-1 5-11 6-9	38 49 59 70		0.150-IV-18 (23)	0.125-II-27 (17)	0.150 (23)	0.100 (11)	0.100 (11)
14-0	4-8 5-7 6-5 7-3	47 58 70 81		0.125-IV-9 (16)	0.125-IV-27 (16)	0.125-II-27 (16)	0.100 (11)	0.100 (11)
15-0	4-8 5-8 6-7 7-5 7-9	50 63 75 87 93		0.125-IV-9 (15)	0.125-IV-27 (15)	0.125-II-27 (15)	0.125 (15)	0.125 (15)
16-0	5-3 6-2 7-1 7-11 8-3	60 73 86 99 105		0.150-IV-9 (18)	0.125-IV-18 (14)	0.125-II-27 (14)	0.150 (18)	0.125 (14)
17-0	5-3 6-3 7-2 8-0 8-10	64 78 92 105 119		0.225-IV-9 (27)	0.150-IV-18 (17)	0.125-II-27 (13)	0.175 (20)	0.150 (17)
18-0	5-9 6-9 7-8 8-6 8-11	75 90 105 119 126			0.175-IV-18 (19)	0.125-IV-27 (12)	0.200 (22)	0.175 (19)
19-0	6-4 7-4 8-2 9-0 9-5	87 103 118 133 141			0.125-IV-9 (11)	0.125-IV-27 (11)	0.125-IV-54 (11)	0.125-IV-54 (11)

Aluminum Structural Plate
Height of Cover Limits*
Combination Metal Thickness, Reinforcing Rib Type, and Rib Spacing
Round Shape- HS 20 Live Load

Diameter (Ft.-In.)	Area (Sq. Ft.)	Minimum Height of Cover (Ft.) 1.00	1.50	2.00	2.50	3.00	3.50
5-0	19	0.125 (45)	0.100 (31)	0.100 (31)	0.100 (31)	0.100 (31)	0.100 (31)
5-6 6-0	23 28	0.125-II-18 (37)	0.100 (25)	0.100 (25)	0.100 (25)	0.100 (25)	0.100 (25)
6-6 7-0	32 38	0.125-II-18 (32)	0.100 (22)	0.100 (22)	0.100 (22)	0.100 (22)	0.100 (22)
7-6 8-0	44 50	0.125-II-9 (28)	0.150 (37)	0.100 (19)	0.100 (19)	0.100 (19)	0.100 (19)
8-6 9-0	56 63	0.125-IV-9 (25)	0.125-II-18 (25)	0.100 (17)	0.100 (17)	0.100 (17)	0.100 (17)
9-6 10-0	71 79	0.125-IV-9 (22)	0.125-II-18 (22)	0.125 (22)	0.100 (15)	0.100 (15)	0.100 (15)
10-6 11-0	87 95	0.175-IV-9 (32)	0.125-II-18 (20)	0.125-II-27 (20)	0.100 (14)	0.100 (14)	0.100 (14)
11-6 12-0	104 114		0.125-IV-18 (18)	0.125-II-27 (18)	0.125 (18)	0.100 (12)	0.100 (12)
12-6 13-0	124 134		0.150-IV-18 (23)	0.125-II-27 (17)	0.150 (23)	0.125 (17)	0.125 (17)
13-6 14-0	145 156		0.125-IV-9 (16)	0.125-IV-27 (16)	0.125-II-27 (16)	0.150 (21)	0.150 (21)
14-6 15-0	167 179		0.125-II-54 (15)	0.125-IV-9 (15)	0.125-IV-27 (15)	0.125-II-27 (15)	0.125-II-54 (15)
15-6 16-0	191 204		0.150-IV-9 (18)	0.125-IV-18 (14)	0.125-II-27 (14)	0.150-II-54 (18)	0.150-II-54 (18)
16-6 17-0	217 231		0.225-IV-9 (27)	0.150-IV-18 (17)	0.150-II-27 (17)	0.150-II-27 (17)	0.150-II-27 (17)
17-6 18-0	245 259			0.175-IV-18 (19)	0.175-II-27 (19)	0.175-II-27 (19)	0.175-II-27 (19)
18-6 19-0	274 289			0.175-IV-9 (18)	0.175-IV-27 (18)	0.175-II-27 (18)	0.175-II-27 (18)
19-6	305			0.200-IV-9 (20)	0.200-IV-27 (20)	0.200-II-27 (20)	0.200-II-27 (20)

* Number in ( ) below combination indicates maximum cover for the given combination plate thickness, rib type and rib spacing. All maxium cover depths are given in feet. (See Note Number 2 Under Structural Plate Notes Sheet 6 of 6).

MINIMUM AND MAXIMUM COVER FOR ALUMINUM STRUCTURAL PLATE

C:\d\projects\standards\roadway\00200-s\00205-05.dgn
rd960rh
1:51:47 PM
6/28/2012

Aluminum Structural Plate
Height of Cover Limits*
Combination Metal Thickness, Reinforcing Rib Type, and Rib Spacing
Underpass Shape- HS 20 Live Load

Span (Ft.-In.)	Rise (Ft.-In.)	Area (Sq.Ft.)	Minimum Height of Cover (Ft.) 1.00	1.50	2.00	2.50	3.00	3.50
6–1	5–9	28	0.125–II–18 (29)	0.100 (25)	0.100 (25)	0.100 (25)	0.100 (25)	0.100 (25)
6–3 6–3 6–2 6–4 6–3 6–5	6–1 6–5 6–11 7–3 7–9 8–1	30 32 34 37 39 42	0.125–II–18 (25)	0.100 (22)	0.100 (22)	0.100 (22)	0.100 (22)	0.100 (22)
12–1	11–0	106		0.125–IV–18 (14)	0.125–II–27 (14)	0.125 (14)	0.100 (12)	0.100 (12)
12–10 13–0	11–2 12–0	114 124		0.150–IV–18 (13)	0.125–II–27 (13)	0.150 (13)	0.125 (13)	0.125 (13)
13–8 14–0	12–4 12–11	133 143		0.125–IV–9 (12)	0.125–IV–27 (12)	0.125–II–27 (12)	0.125–II–54 (12)	0.125–II–54 (12)
14–6 14–8	13–5 14–1	155 165		0.125–IV–9 (11)	0.125–IV–27 (11)	0.125–II–27 (11)	0.125–II–54 (11)	0.125–II–54 (11)
15–5 15–6	14–5 15–2	177 190		0.150–IV–9 (11)	0.125–IV–18 (11)	0.125–II–27 (11)	0.125–II–27 (11)	0.125–II–2 (11)
16–2 16–6 16–8	15–6 16–0 16–4	200 208 215		0.225–IV–9 (10)	0.150–IV–18 (10)	0.150–II–27 (10)	0.150–II–27 (10)	0.150–II–27 (10)

Aluminum Structural Plate
Height of Cover Limits*
Combination Metal Thickness, Reinforcing Rib Type, and Rib Spacing
Pipe-Arch Shape- HS 20 Live Load

Span (Ft.-In.)	Rise (Ft-In)	Area (Sq-Ft)	Minimum Height of Cover (Ft.) 1.00	1.50	2.00	2.50	3.00	3.50
6–7 6–11	5–8 5–9	30 32	0.125–II–18 (25)	0.100 (22)	0.100 (22)	0.100 (22)	0.100 (22)	0.100 (22)
7–3 7–9 8–1	5–11 6–0 6–1	34 37 39	0.125–IV–18 (22)	0.150 (22)	0.100 (19)	0.100 (19)	0.100 (19)	0.100 (19)
8–5 8–10	6–3 6–4	42 45	0.125–IV–9 (19)	0.125–II–18 (19)	0.100 (17)	0.100 (17)	0.100 (17)	0.100 (17)
9–3 9–7 9–11	6–5 6–6 6–8	47 50 53	0.125–IV–9 (17)	0.125–II–18 (17)	0.125 (17)	0.100 (15)	0.100 (15)	0.100 (15)
10–3 10–9 11–1	6–9 6–10 7–0	56 58 61	0.175–IV–9 (16)	0.125–II–18 (16)	0.125–II–27 (16)	0.100 (14)	0.100 (14)	0.100 (14)
11–5 11–9	7–1 7–2	64 68		0.125–II–18 (14)	0.125–II–27 (14)	0.125 (14)	0.100 (12)	0.100 (12)
12–3 12–7 12–11 13–1 13–1	7–3 7–5 7–6 8–2 8–4	71 74 77 83 87		0.150–IV–18 (13)	0.125–II–27 (13)	0.150 (13)	0.100 (11)	0.100 (11)
13–11 14–0 13–11	8–5 8–7 9–5	90 94 102		0.125–IV–9 (12)	0.125–IV–27 (12)	0.125–II–27 (12)	0.100 (11)	0.100 (11)
14–3 14–8 14–11	9–7 9–8 9–10	106 110 114		0.125–IV–9 (11)	0.125–IV–27 (11)	0.125–II–27 (11)	0.125 (11)	0.125 (11)
15–4 15–7 16–1	10–0 10–2 10–4	119 123 128		0.150–IV–9 (11)	0.125–IV–18 (11)	0.125–II–27 (11)	0.125–II–54 (11)	0.125 (11)
16–4	10–6	132		0.225–IV–9 (10)	0.150–IV–18 (10)	0.125–II–27 (10)	0.125–II–54 (10)	0.125–II–54 (10)

* Number in ( ) below combination indicates maximum cover for the given combination plate thickness, rib type and rib spacing. All maximum cover depths are given in feet. (See Note Number 2 Under Structural Plate Notes)

ALUMINUM STRUCTURAL PLATE NOTES

1. Allowable cover (minimum & maximum) is measured from the outside valley of crown plate to the bottom of flexible pavement or from the outside valley of the crown plate to the top of rigid pavement. Minimum cover must be maintained in unpaved areas. Maximum cover is measured at the highest fill and/or the highest pavement elevation.

2. To find the minimum material requirements for the aluminum structural plate structure:
   a. Select the span in the left hand column that is equal to or larger than structure size required.

   b. Select the cover in the top row that is equal to or smaller than that required for the site.

   c. Intersect appropriate span and cover to find the appropriate plate.
   Example: Round Pipe, Span= 17'–0", Height of Cover= 2'–7" (use 2.5 ft. in table). Ans: 0.150–II–27 (17)
   The table selections show metal thickness, rib type, rib spacing and maximum cover.
   Example: 0.150–II–27=0.150" thick plate structure with Type II rib at 27" on centers on the crown.
   Number (17) in parenthesis below combination indicates maximum cover in feet for the given combination of plate thickness, rib type, and rib spacing.

3. Arch shapes shown are single radius and have a rise–to–span ratio of 0.30 to 0.53 Structures with rise–to–span ratios of less than 0.30 are typically not used because of structural considerations.

4. Tables based on HS 20 wheel loads.

DESIGN NOTES

1. The plans must call out size, metal thickness, reinforcing rib type and rib spacing.

2. Pipe–arch and underpass shapes will generate high corner bearing pressures against the sidefill and foundation. The height of cover is directly affected by these bearing pressures. The surrounding soil and foundation must be checked to ensure that they to react against these pressures to avoid inducing excessive strain in plate.

MINIMUM AND MAXIMUM COVER FOR ALUMINUM STRUCTURAL PLATE

C:\d\projects\standards\roadway\00200-s\00205-06.dgn 1:51:49 PM rd960rh 6/28/2012

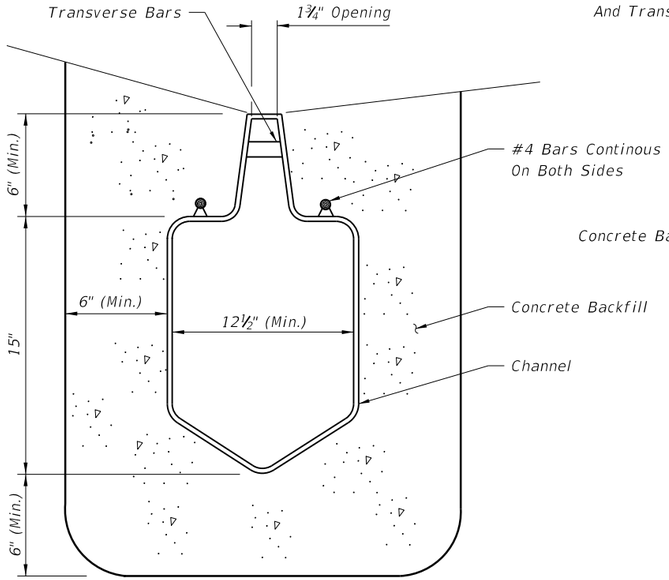

PREFORMED POLYETHYLENE ALTERNATE

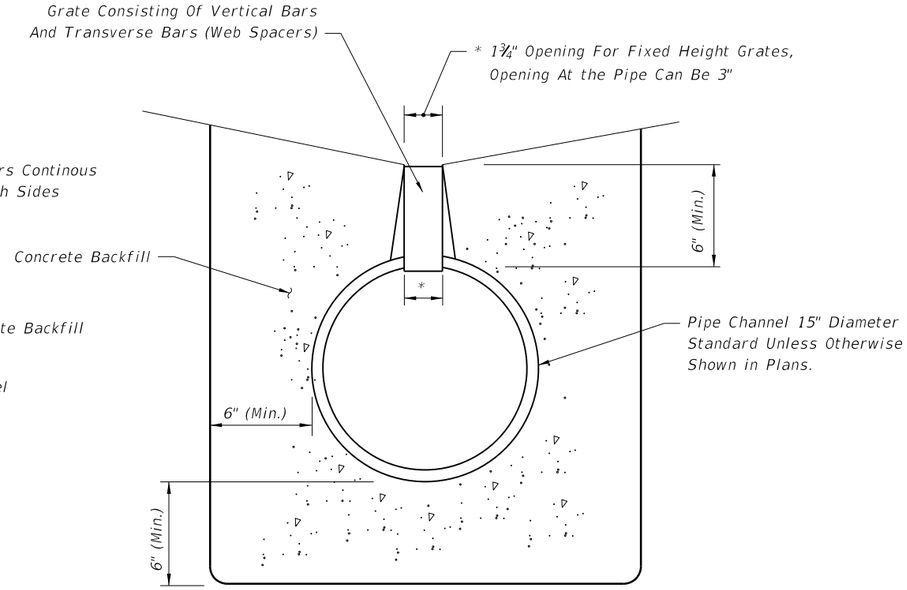

ROUND ALTERNATE

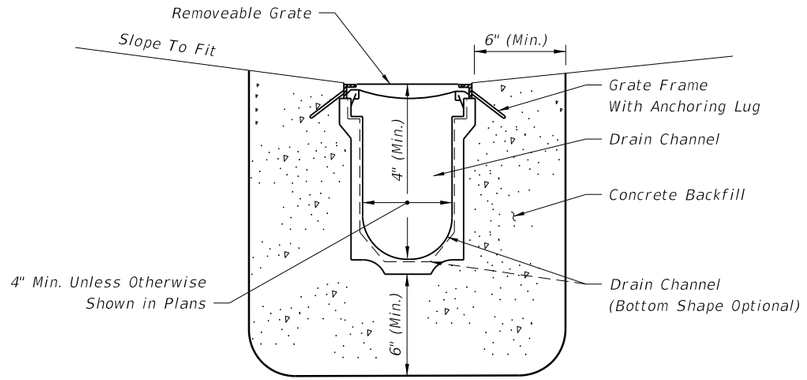

PREFORMED CHANNEL WITH REMOVABLE GRATE

SEE SHEET 2 FOR TYPICAL LOCATIONS

TYPE I (NON-REMOVABLE GRATE)

GENERAL NOTES

1. Trench drain is intended for use in gutters and driveways as shown on the typical locations on Sheet 2. Type I is intended for use in Type E, F and drop curbing, and adjacent to traffic separators and standard barrier walls. The width of the channel grate for Type I Trench Drain shall be 1¾" throughout varying the depth of the channel neck. Type II may also be used in those locations if an independent laboratory certifies that the grating used has an open area equal to at least 0.27 square feet per linear foot. Type II is primarily intended for use in valley gutter across driveway openings and drop curbing; Type I may also be used in those locations. The width of the channel grate for Type II Trench Drain shall be the same as the width of the channel. The linear slope or gradient for Type II may be manufactured by varying the depth of the channel. Trench Drain shall not be placed in pedestrian paths unless ADA compliant grates are used.

2. Unless shown in the plans, outlet pipes and preformed channel inverts shall be sloped 0.6% or steeper toward the outlet regardless of the surface slope.

3. Trench drain may be stubbed directly into drainage structures, or outlet pipes may be used to connect trench drain to drainage structures.

4. A cleanout port compatible with the manufactured system shall be provided for Type I drains at the upstream end and at intervals not to exceed 50 feet. The cleanout port shall provide an opening 6" to 10" wide (transverse to the trench drain length) and 18" to 24" long. Where cleanouts are placed adjacent to raised curb or separator, the curb or separator shall be formed around the cleanout. The cleanout shall have a removable load resistant cover or grate.

5. Trench excavation must allow for a minimum of 6" of concrete to be placed under and alongside the trench drain channel system. Concrete backfill shall meet the requirements of Section 347 of the Standard Specifications. At the end of all units (Type I or II), the concrete backfill shall extend 6" minimum past the end of the drain opening.

6. Transverse bars for Type I Trench Drain shall be spaced 4" to 6" on center.

7. Whenever the work disturbs existing conditions or work already completed, restore the same to its original condition in every detail. All such repair and replacement shall meet the approval of the Engineer.

8. Payment to be made under the contract unit price for Trench Drain, LF.

TYPE II

DESIGN NOTES

1. Where placed adjacent to reinforced concrete barrier wall or median barrier wall, the designer shall detail in the plans the position of the drain relative to the barrier wall to avoid conflicts with the barrier wall footing. See Index No. 410.

2. The designer shall identify the following in the plans:

   (a) The type of drain at each location.

   (b) The begin and end locations of the Trench Drain.

   (c) The location of the outlet pipe if the Trench Drain is not stubbed directly into a drainage structure.

   (d) The design flow (Q) for the Trench Drain must be shown on the plans.

3. Capture efficiency for Type I Trench Drain may be computed using the equations for slotted drain in FHWA's HEC 12 & 22. Grate Type I and Type II must have at least 30% open area.

4. Round pipe alternate is available in 12, 18, 24 and 36 inch.

5. Type II Preformed Channel with integral anchoring lugs are applicable.

C:\d\projects\standards\roadway\00200-s\00206-01.dgn
rd960rh
1:51:51 PM
6/28/2012

LAST REVISION	REVISION	DESCRIPTION:	FDOT DESIGN STANDARDS 2013	TRENCH DRAIN	INDEX NO.	SHEET NO.
07/01/10					206	1

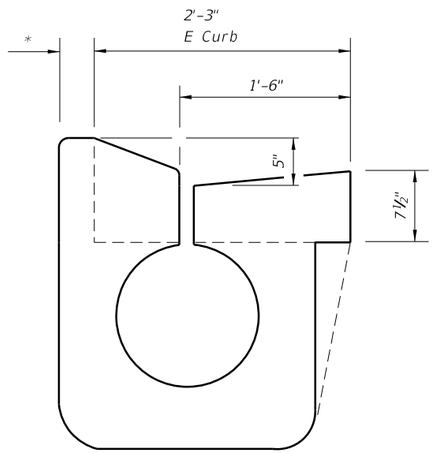

WITHIN TYPE E CURB

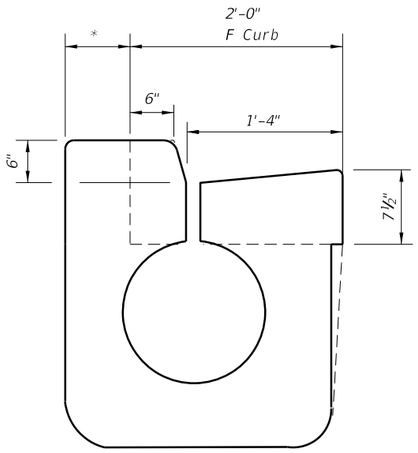

WITHIN TYPE F CURB

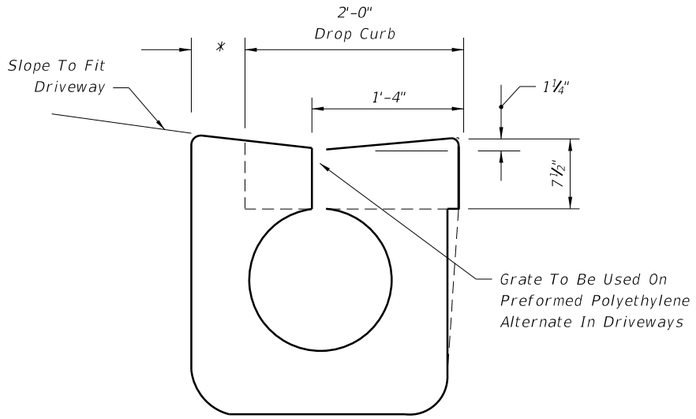

WITHIN DROP CURB

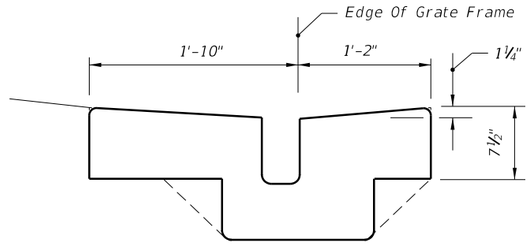

WITHIN VALLEY GUTTER

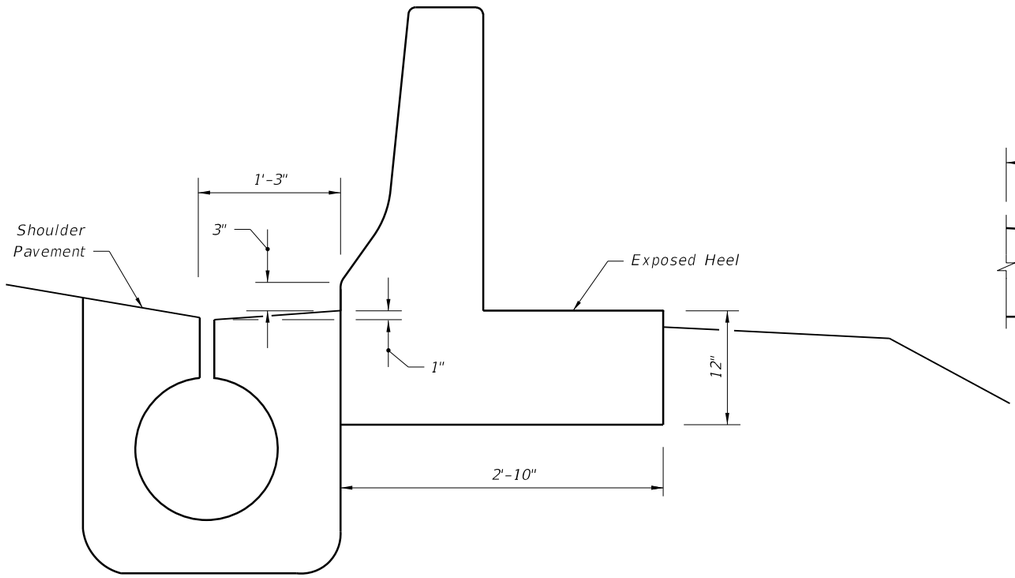

ADJACENT TO SHOULDER BARRIER WALL

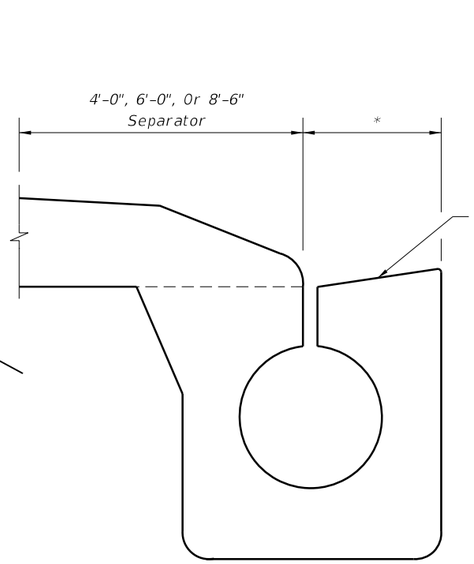

ADJACENT TO TRAFFIC SEPARATOR

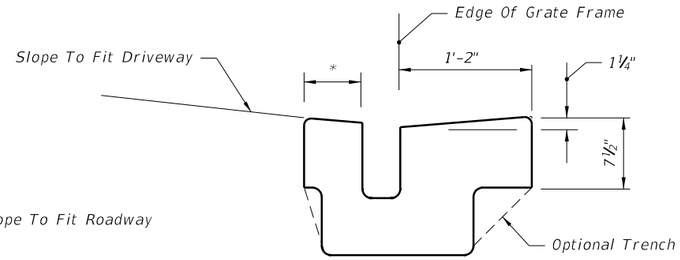

WITHIN DROP CURB

TYPICAL LOCATIONS FOR TYPE II

ROUND PIPE ALTERNATE SHOWN, BUT PREFORMED POLYETHYLENE ALTERNATE ACCEPTABLE

TYPICAL LOCATIONS FOR TYPE I

* As Necessary To Provide 6" Of Concrete
On This Side Of Drain

C:\d\projects\standards\roadway\00200-s\00206-02.dgn
rd960rh
1:51:54 PM
6/28/2012

LAST REVISION	REVISION	DESCRIPTION:			INDEX NO.	SHEET NO.
04			FDOT DESIGN STANDARDS 2013	TRENCH DRAIN	206	2

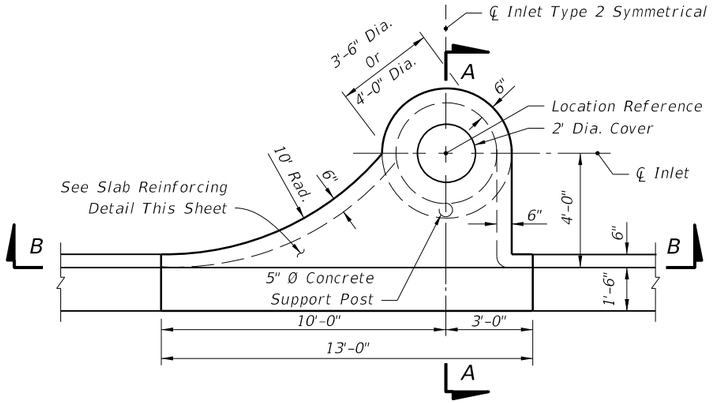

PLAN (INLET TYPE 2 SYMMETRICAL ABOUT ℄)

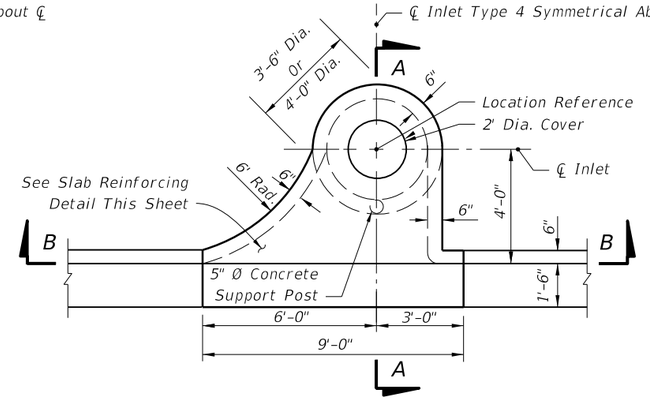

PLAN (INLET TYPE 4 SYMMETRICAL ABOUT ℄)

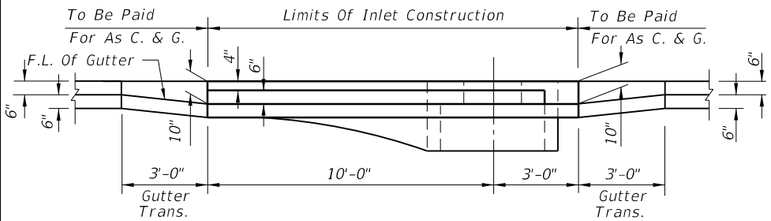

SECTION BB (INLET TYPE 2 SYMMETRICAL ABOUT ℄)

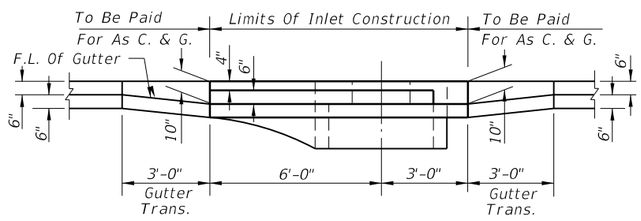

SECTION BB (INLET TYPE 4 SYMMETRICAL ABOUT ℄)

INLETS TYPES 1 AND 2

INLETS TYPES 3 AND 4

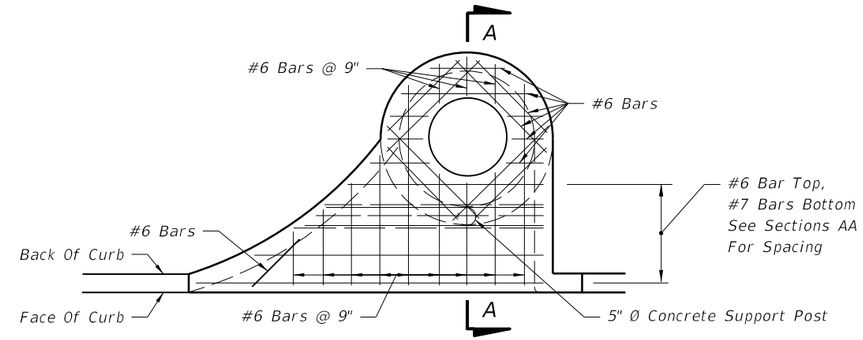

INLETS TYPES 1 AND 3

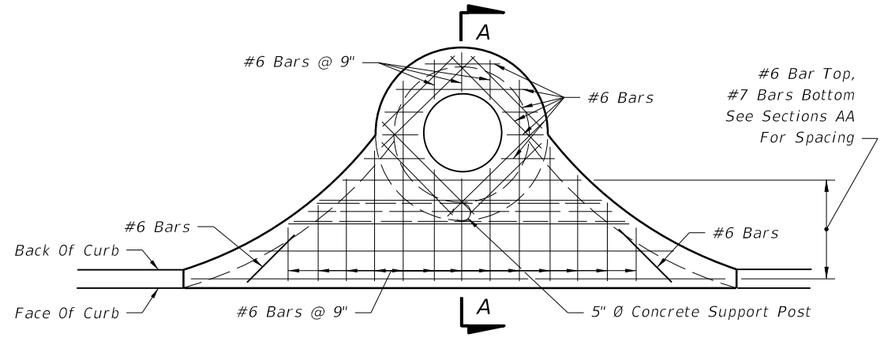

INLETS TYPES 2 AND 4

SLAB REINFORCING

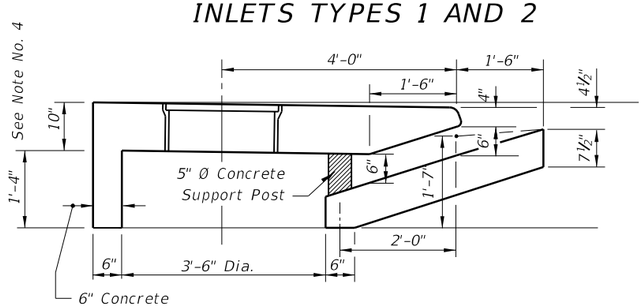

DIMENSIONAL SECTION

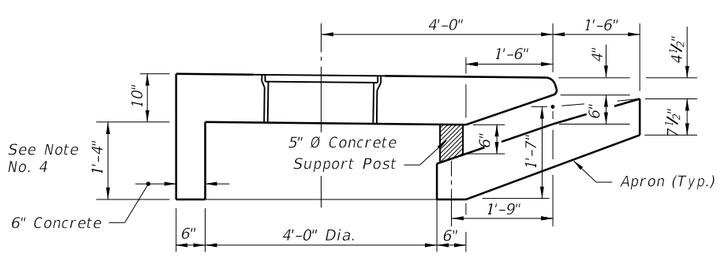

DIMENSIONAL SECTION

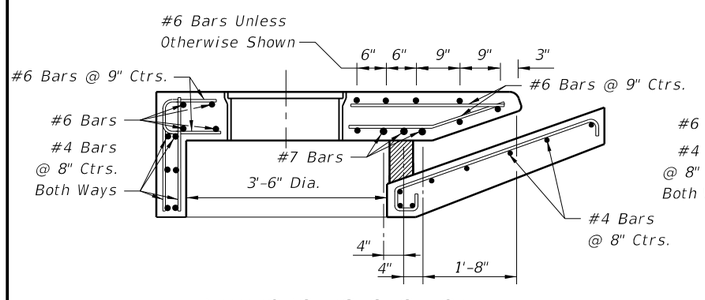

REINFORCING SECTION
3'-6" DIA. STRUCTURE BOTTOM (SECTION AA)

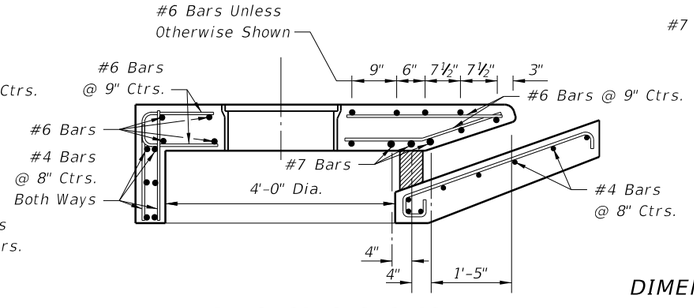

REINFORCING SECTION
4'-0" DIA. STRUCTURE BOTTOM (SECTION AA)

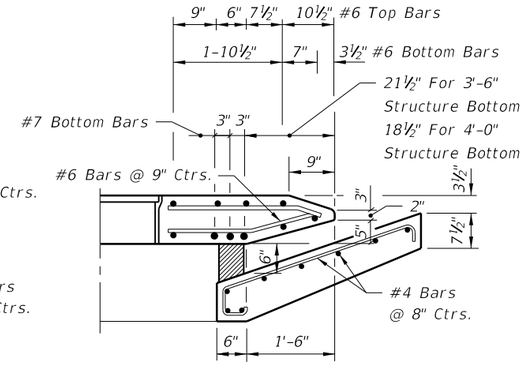

DIMENSION & REINFORCING HALF SECTION
TYPES A & E CURB (HALF SECTION AA)
(TYPE E GUTTER SHOWN)

TRANSVERSE SECTIONS FOR INLETS TYPES 1, 2, 3 & 4

GENERAL NOTES

1. The finished grade and slope of the inlet tops are to conform with the finished cross slope and grade of the proposed sidewalk and/or border.
2. When inlets are to be constructed on a curve, refer to the plans to determine the radius and, where necessary, modify the inlet details accordingly. Bend steel when necessary.
3. All steel in inlet top shall have 1¼" minimum cover unless otherwise shown. Inlet tops shall be either cast-in-place or precast concrete.
4. For precast units the rear wall and apron may be precast as a separate piece from the top slab. Provide a minimum of 7 ~ #4 dowels in accordance with Index No. 201 "OPTIONAL CONSTRUCTION JOINTS".
5. For supplemental details see Index No. 201.
6. Only round concrete support post will be acceptable.
7. These inlets are designed for use with standard curb and gutter Types E and Type F. Locate inlet outside of pedestrian crosswalks.
8. For structure bottoms see Index No. 200.
9. Inlet to be paid for under the contract unit price for inlets (Curb) (Type_), Each.

C:\d\projects\standards\roadway\00200-s\00210-01.dgn rd960rh 1:51:55 PM 6/28/2012

LAST REVISION	REVISION	DESCRIPTION:				
07/01/09			FDOT DESIGN STANDARDS 2013	CURB INLET TOPS TYPES 1, 2, 3 AND 4	INDEX NO. 210	SHEET NO. 1

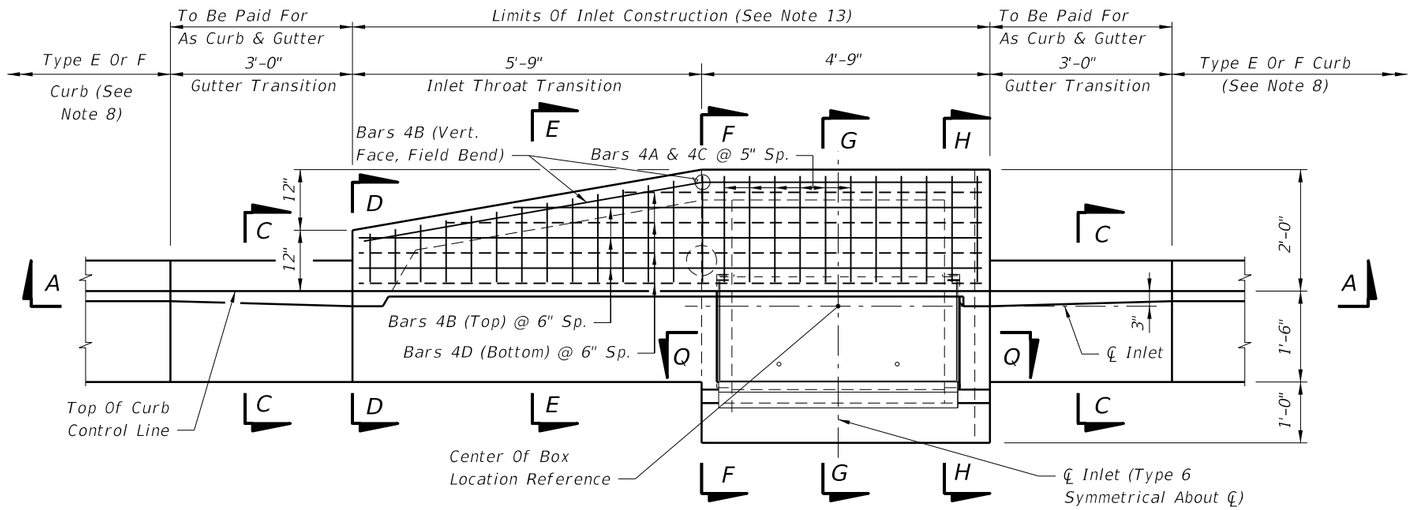

TOP VIEW

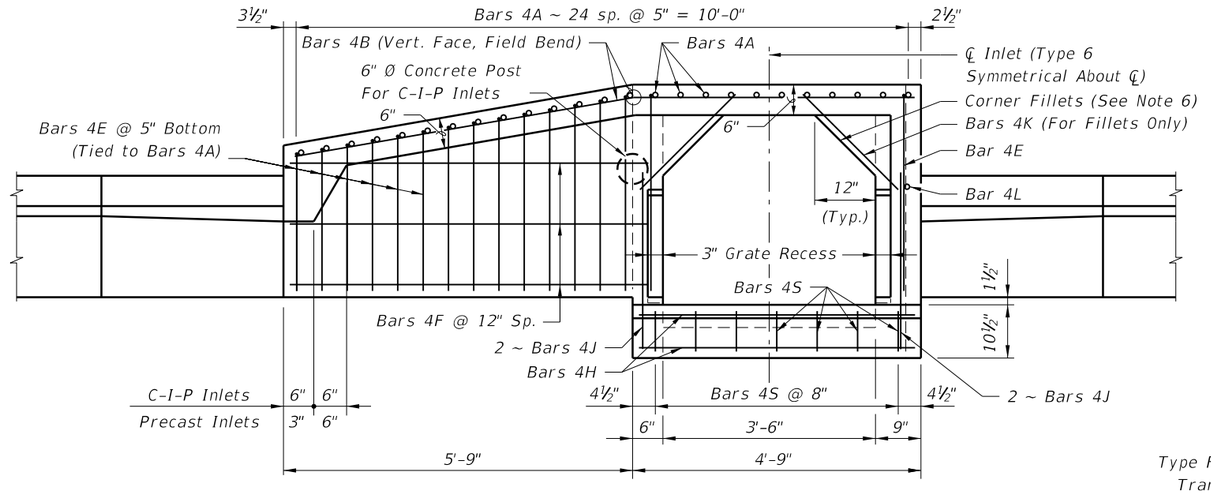

SECTION BB

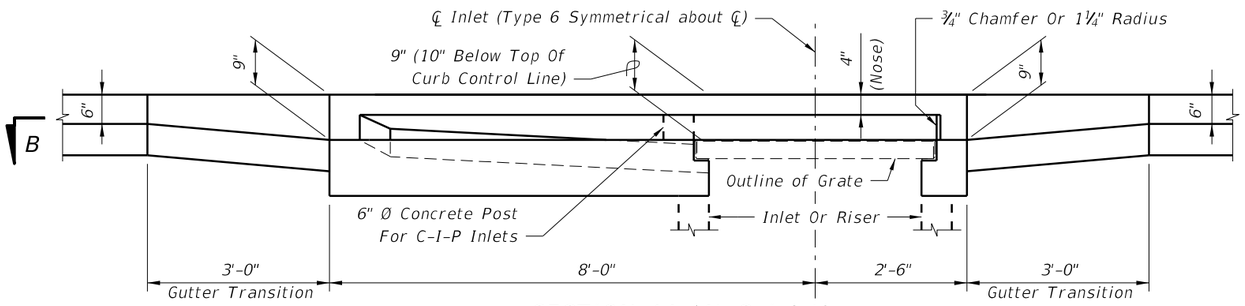

SECTION AA (At ℄ Inlet)

INLET TYPE 5 (Curb Inlet Type 6 Symmetrical With Left Half)

GENERAL NOTES

1. The finished grade and slope of the inlet tops are to conform with the finished cross slope and grade of the proposed sidewalk and/or border.
2. For inlets constructed on a curve, refer to the plans to determine the radius, and modify the inlet details accordingly. Bend steel when necessary.
3. All reinforcing steel to be Grade 60 bars with 1¼" minimum cover unless otherwise shown, see Sheet 4 for equivalent area Welded Wire Reinforcement details.
4. Inlet tops shall be either cast-in-place or precast concrete. Precast units shall conform to the dimensions shown or in accordance with approved shop drawing's. Request for shop drawing approval shall be directed to the State Drainage Engineer.
5. Concrete meeting the requirements of ASTM C478 (4,000 psi) may be used in lieu of Class II concrete for precast units, manufactured in plants which meet the requirements of Section 449 of the Specifications.
6. Corner fillets are required at inlet opening for precast units or C-I-P units used in conjunction with circular inlet bottoms or skewed rectangular inlet boxes. Finish top of fillets flush with drain throat bottom and match slope.
7. For inlet bottoms see Index No. 200. Inlet tops are to be used with Type P bottoms, or Type J bottoms with 3'-6" square (Type B), 3'-6" or 4' round (Type A) risers or top slab openings.
8. These inlet tops are designed for use with standard curb and gutter Type E and Type F. Locate inlet outside of pedestrian crosswalks. For Type E curb, transition the shape of the curb over the gutter transition length to match the face of the inlet (Type F).
9. See Index No. 201 for supplemental details.
10. All steel used for frame and grate shall meet the requirements of ASTM A36/A36M.
11. Either cast iron grates or steel grates may be used.
12. When Alternate "G" grate is specified in the plans either the cast iron grate and galvanized steel frame or the the galvanized steel grate and frame must be used. Grates are to be grouted in accordance with the grouting detail shown on Sheet 5, in lieu of tack welding.
13. Inlet to be paid for under the contract unit price for Inlets (Curb) (Type _), Each.

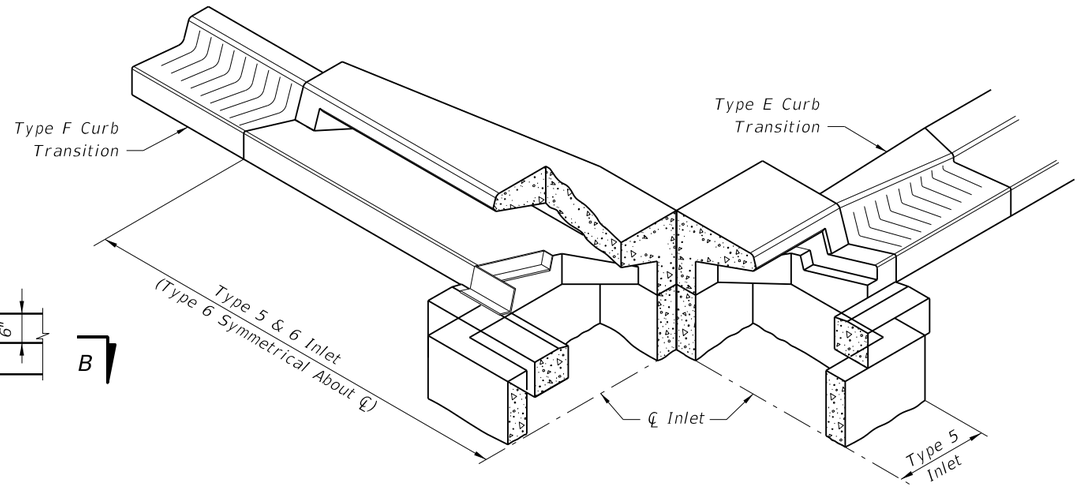

SKETCH SHOWING FRAME SEAT AND THROAT RECESS

C:\d\projects\standards\roadway\00200-s\00211.dgn rd960rh 1:51:58 PM 6/28/2012

LAST REVISION	REVISION	DESCRIPTION:				
01/01/10			FDOT DESIGN STANDARDS 2013	CURB INLET TOPS TYPES 5 AND 6	INDEX NO. 211	SHEET NO. 1

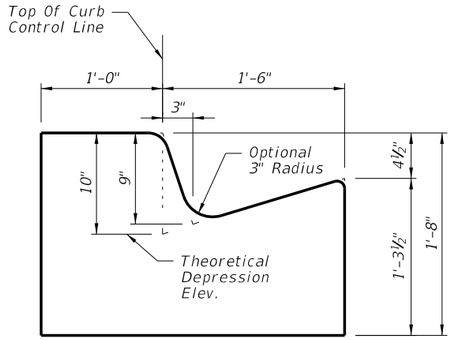

SECTION DD
(End View Of Inlet)

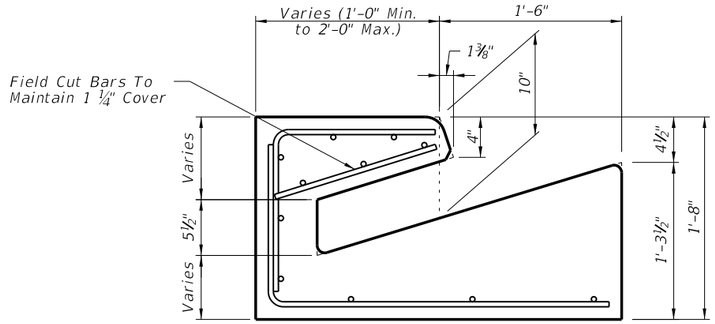

SECTION EE

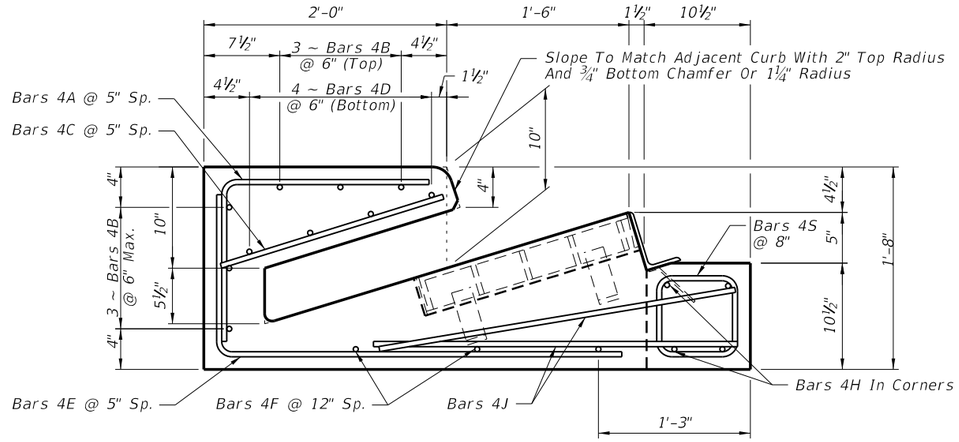

SECTION FF

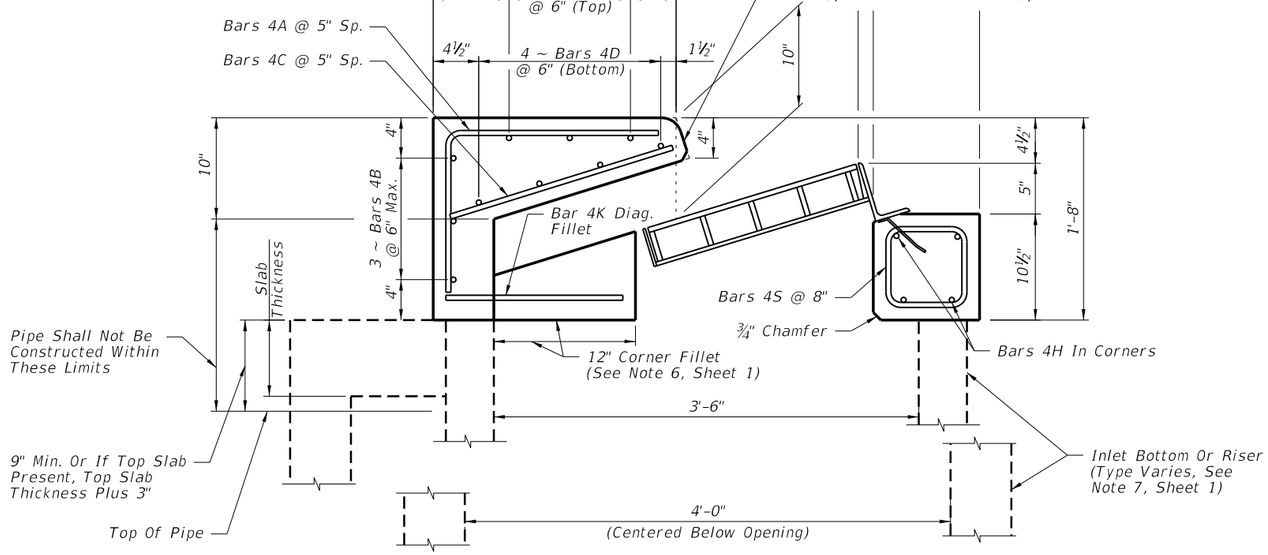

SECTION GG

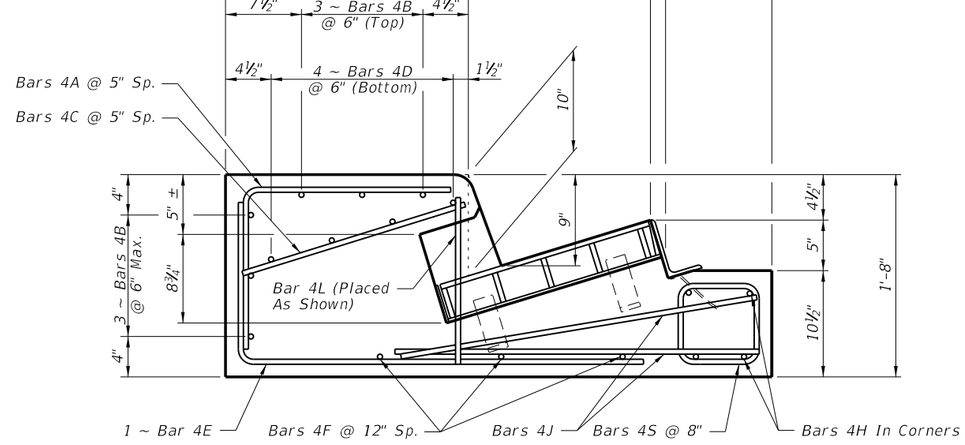

SECTION HH
(Type 5 Inlet Only)

CROSS REFRENCES:
For General Notes See Sheet 1.
For Location Of Sections DD
Thru HH See Sheet 1.

PRECAST DETAILS

LAST REVISION	REVISION	DESCRIPTION:			INDEX NO.	SHEET NO.
07/01/12			FDOT DESIGN STANDARDS 2013	CURB INLET TOPS TYPES 5 AND 6	211	2

6/28/2012 1:51:59 PM rd960rh C:\d\projects\standards\roadway\00200-s\00211.dgn

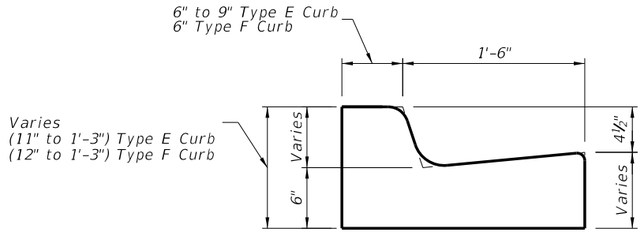

SECTION CC
(Gutter Transition
Type F Shown, Type E Similar)

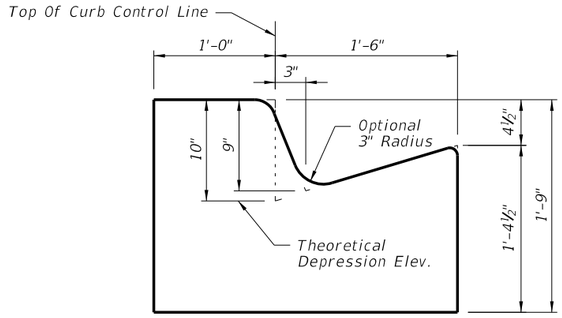

SECTION DD (OPTION A)
(End View Of Inlet)

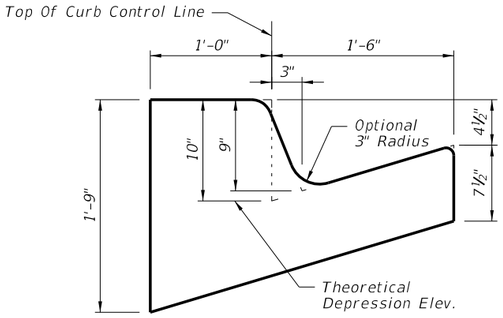

SECTION DD (OPTION B)
(End View Of Inlet)

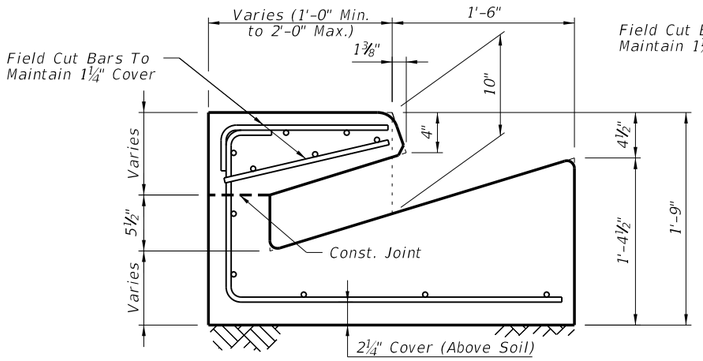

SECTION EE (OPTION A)

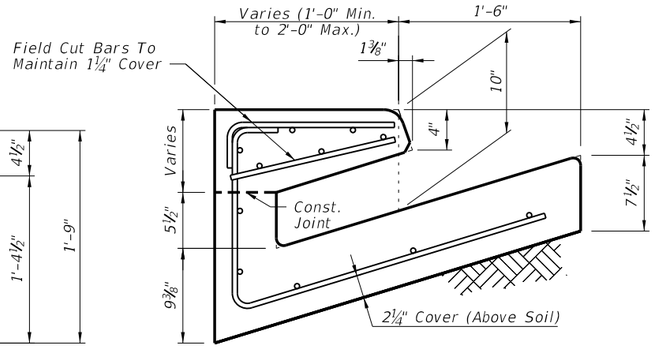

SECTION EE (OPTION B)

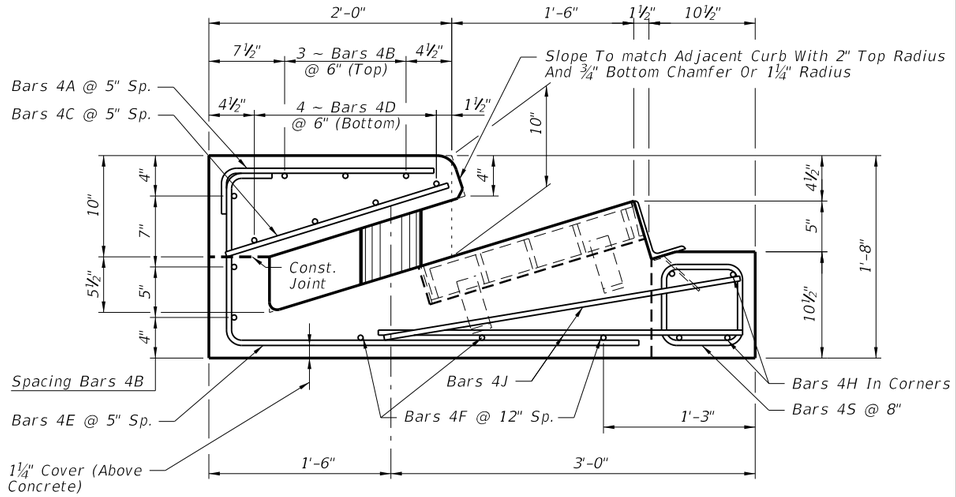

SECTION FF

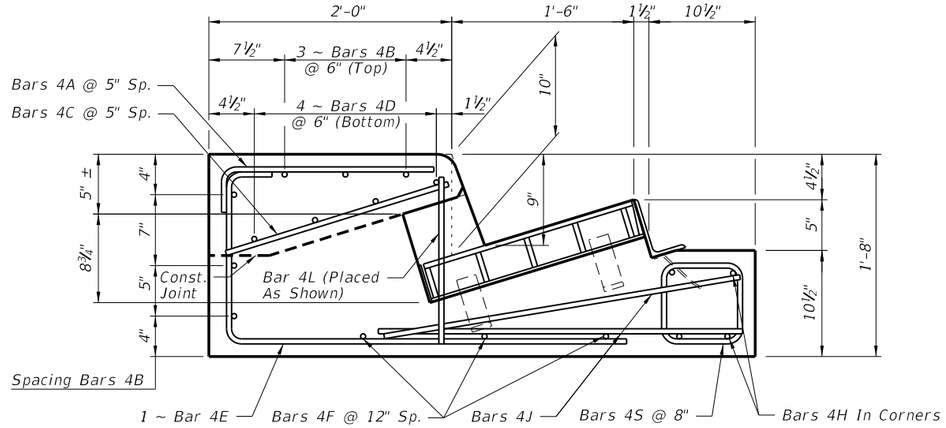

SECTION HH (Type 5 Inlet Only)

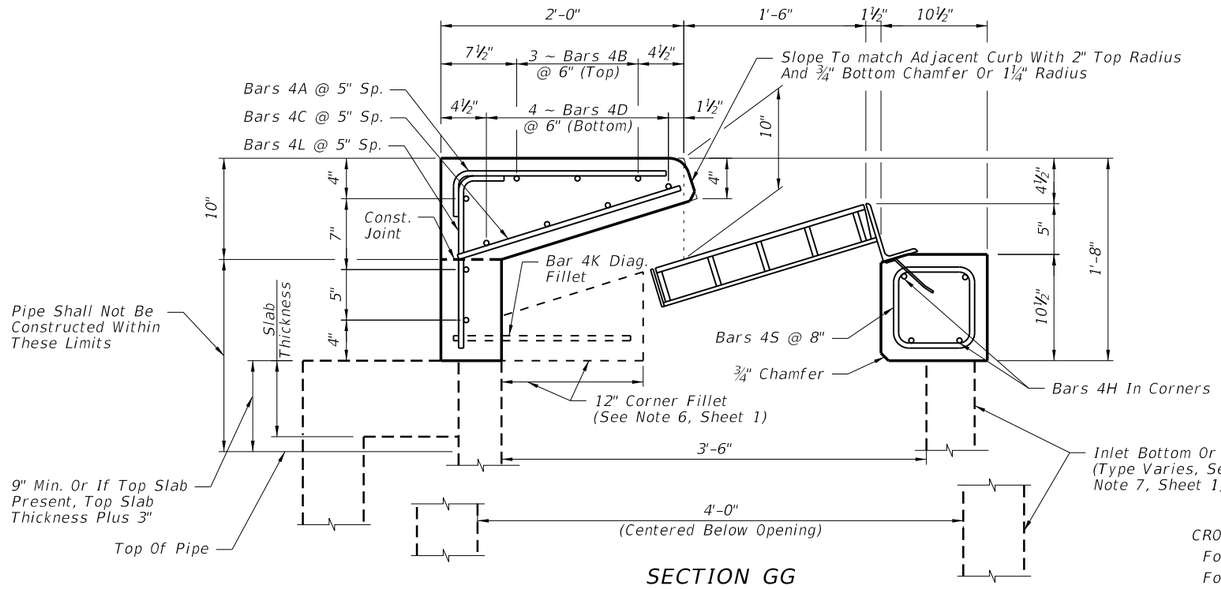

SECTION GG

CROSS REFRENCES:
For General Notes See Sheet 1.
For Location Of Sections CC Thru HH See Sheet 1.

CAST-IN-PLACE DETAILS

LAST REVISION	REVISION	DESCRIPTION:	FDOT DESIGN STANDARDS 2013	CURB INLET TOPS TYPES 5 AND 6	INDEX NO.	SHEET NO.
07/01/12					211	3

C:\d\projects\standards\roadway\00200-s\00211.dgn rd960rh 1:51:59 PM 6/28/2012

ALTERNATE REINFORCING STEEL DETAILS FOR WELDED WIRE REINFORCEMENT (WWR)

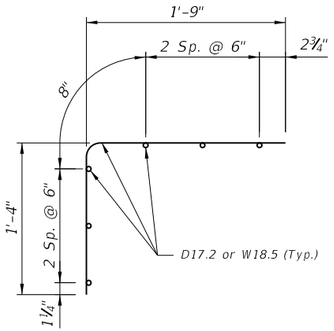

WELDED WIRE REINFORCEMENT
PIECE NO. 1

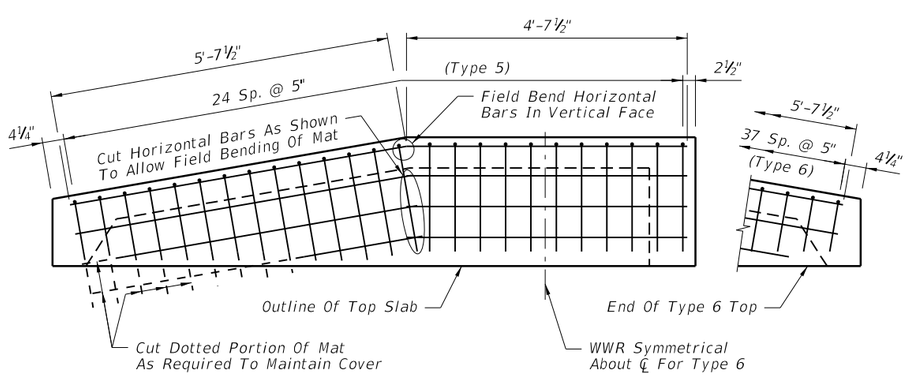

PLACEMENT SCHEMATIC FOR WELDED
WIRE REINFORCEMENT PIECE NO. 1

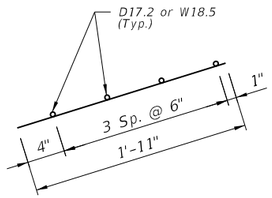

WELDED WIRE REINFORCEMENT
PIECE NO. 2

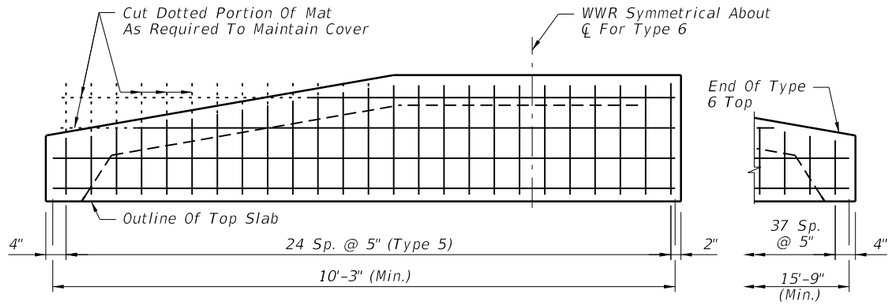

PLACEMENT SCHEMATIC FOR WELDED
WIRE REINFORCEMENT PIECE NO. 2

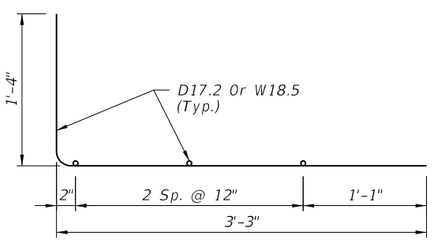

WELDED WIRE REINFORCEMENT
PIECE NO. 3

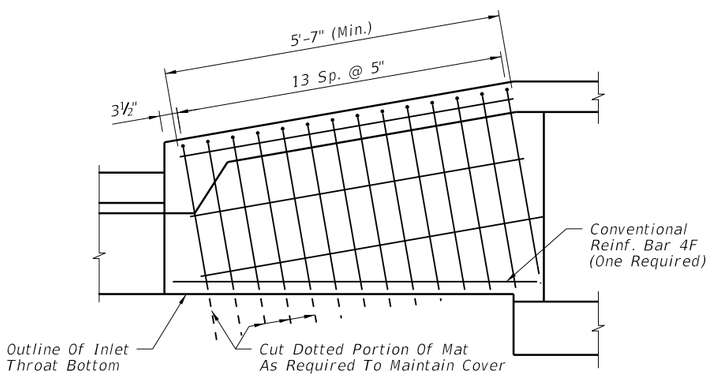

PLACEMENT SCHEMATIC FOR WELDED
WIRE REINFORCEMENT PIECE NO. 3

CONVENTIONAL REINFORCING STEEL BENDING DIAGRAMS

BILL OF REINFORCING STEEL

MARK	SIZE	TYPE 5 INLET		TYPE 6 INLET	
		NO.	LENGTH	NO.	LENGTH
A (Precast)	4	25	3'-1"	38	3'-1"
A (C-I-P)	4	25	2'-1½"	38	2'-1½"
B	4	6	10'-3"	6	15'-9"
C	4	25	11" to 1'-11"	38	11" to 1'-11"
D	4	4	10'-3"	4	15'-9"
E	4	16	4'-11½"	30	4'-11½"
F	4	3	6'-0"	6	6'-0"
H	4	4	4'-6"	4	4'-6"
J	4	4	3'-0"	4	3'-0"
K (Fillet)	4	2	2'-3"	2	2'-3"
L (Precast)	4	1	1'-4"	0	---
L (C-I-P)	4	10	1'-4"	9	1'-4"
S	4	7	3'-2"	7	3'-2"

REINFORCING STEEL NOTES:

1. All bar dimensions in the bending diagrams are out to out.
2. Bars 4A and 4E may be combined into a single bar.
3. Welded Wire Reinforcement shall comply with ASTM A185 or ASTM A497.

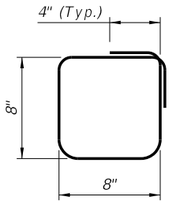

BAR 4S

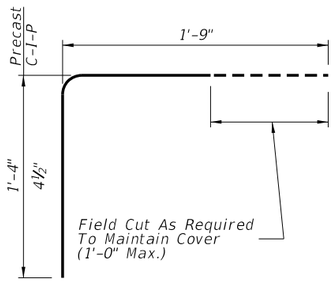

BAR 4A

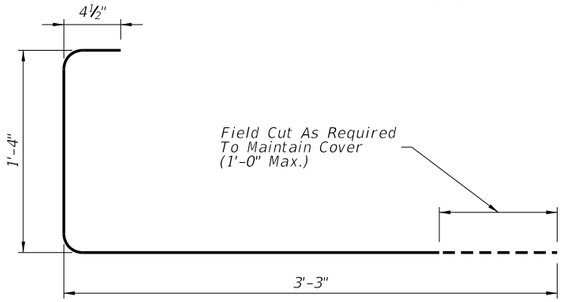

BAR 4E

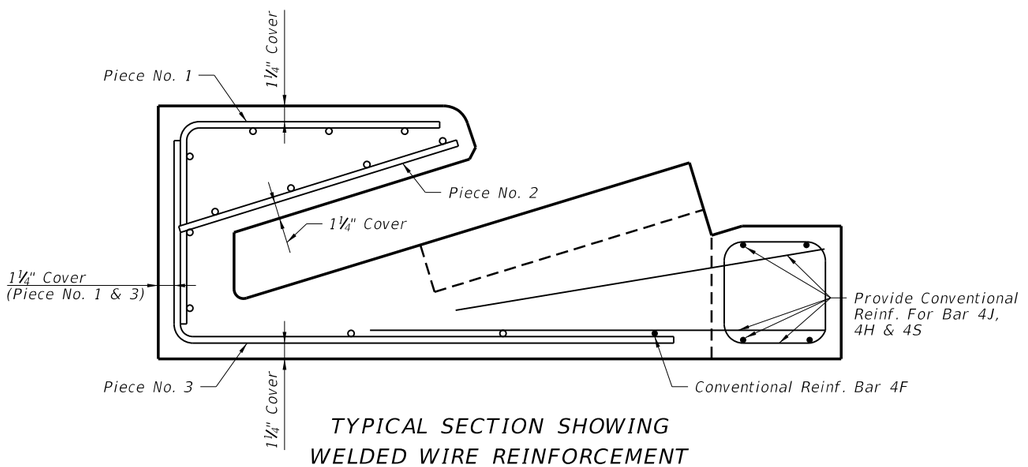

TYPICAL SECTION SHOWING
WELDED WIRE REINFORCEMENT

C:\d\projects\standards\roadway\00200-s\00211.dgn
rd960rh
1:52:00 PM
6/28/2012

LAST REVISION	REVISION	DESCRIPTION:			INDEX NO.	SHEET NO.
07/01/12			FDOT DESIGN STANDARDS 2013	CURB INLET TOPS TYPES 5 AND 6	211	4

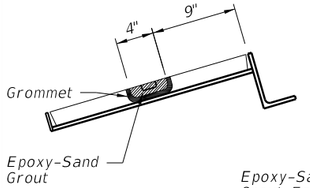

SECTION NN

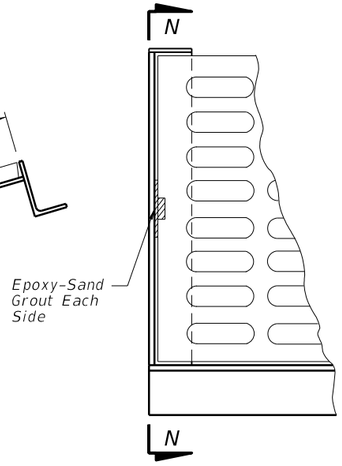

TOP VIEW
CAST IRON GRATE

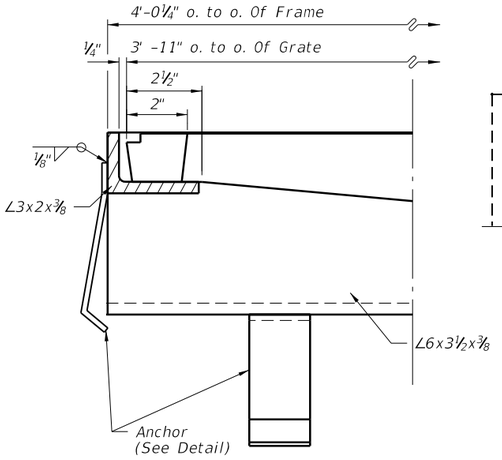

SECTION QQ

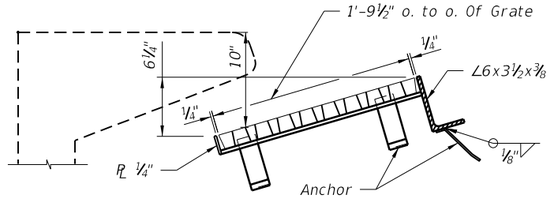

SECTION GG

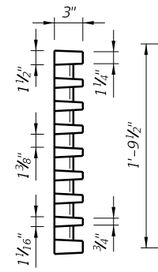

SECTION SS

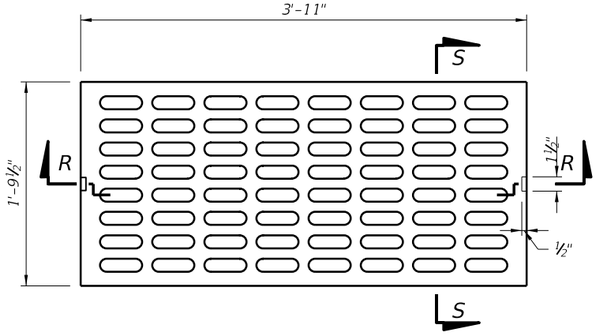

TOP VIEW

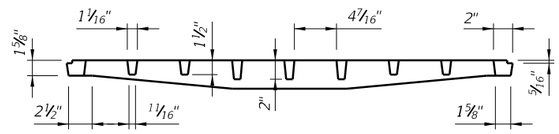

SECTION RR

CAST IRON GRATE

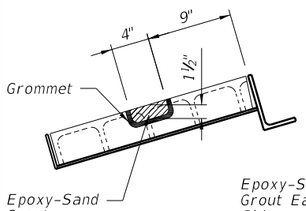

SECTION MM

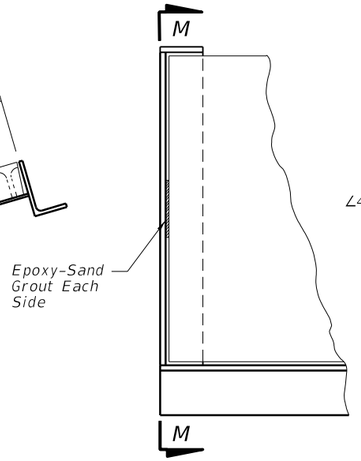

TOP VIEW
STEEL GRATE

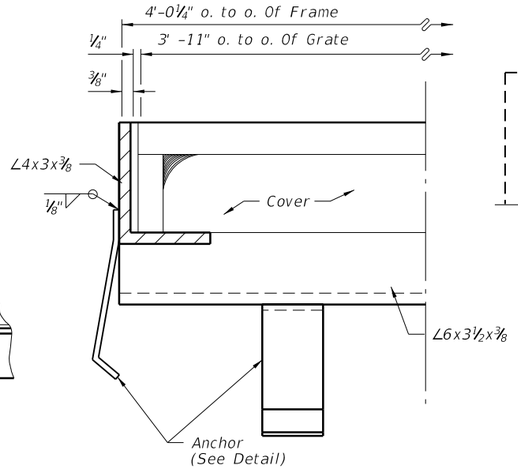

SECTION QQ

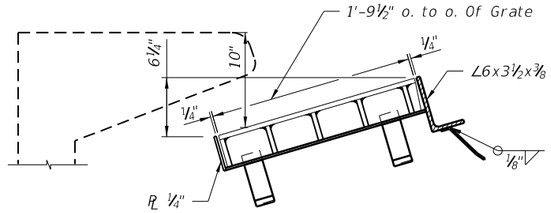

SECTION GG

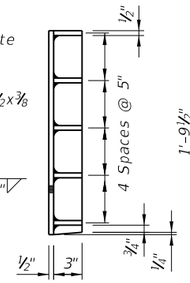

SECTION YY

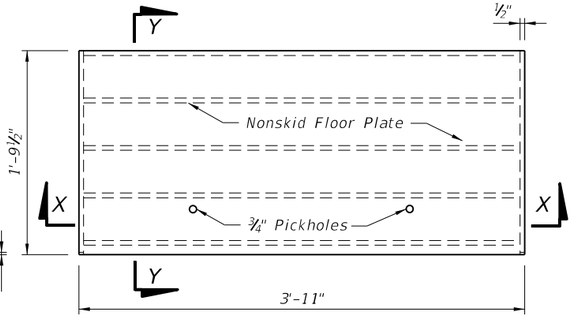

TOP VIEW

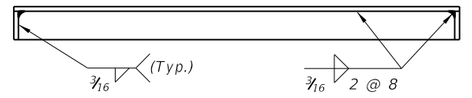

SECTION XX

GROUTING DETAILS

CROSS REFERENCES:
For Location Of Section GG and QQ
See Sheet 1.

STEEL GRATE

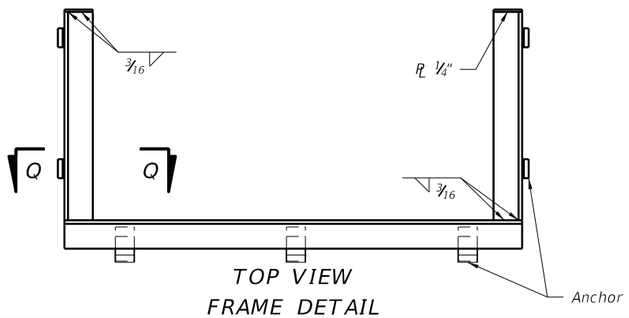

TOP VIEW
FRAME DETAIL

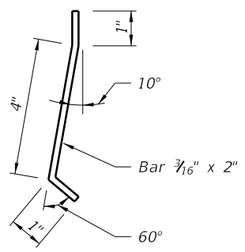

ANCHOR DETAIL

C:\d\projects\standards\roadway\00200-s\00211.dgn
rd960rh
1:52:01 PM
6/28/2012

LAST REVISION	REVISION	DESCRIPTION:				
07/01/09			FDOT DESIGN STANDARDS 2013	CURB INLET TOPS TYPES 5 AND 6	INDEX NO. 211	SHEET NO. 5

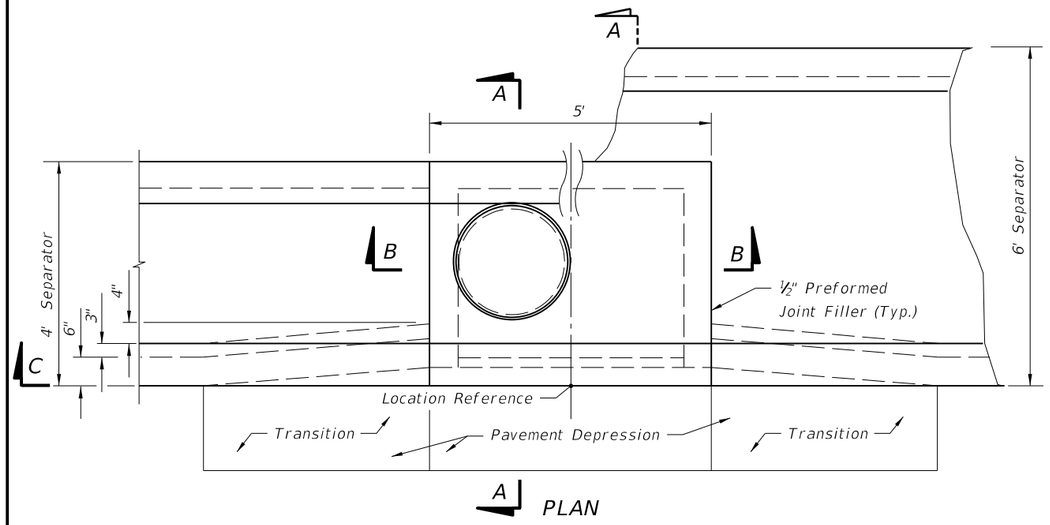

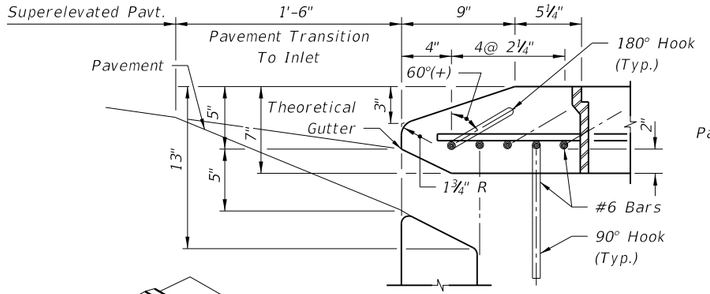

THROAT DETAIL

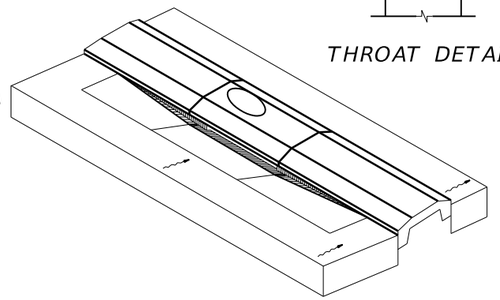

HORIZONTAL WALL REINFORCING SCHEDULE (TABLE 1)

WALL DEPTH	SCHEDULE	AREA (in.²/ft.)	MAX. SPACING	
			BARS	WWF
0' – 6'	A12	0.20	12"	8"
6' – 10'	A6	0.20	6"	5"
10' – 13'	A4	0.20	4"	3"
10' – 15'	B5.5	0.24	5½"	5"

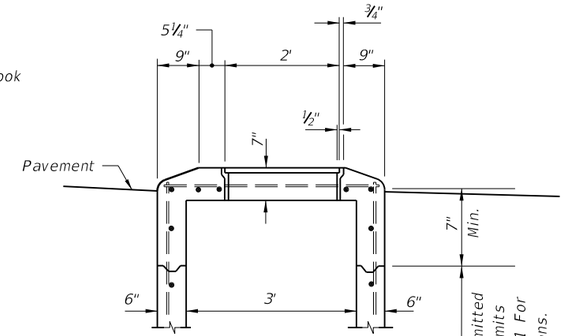

MODIFICATION WHEN USED AS A MANHOLE

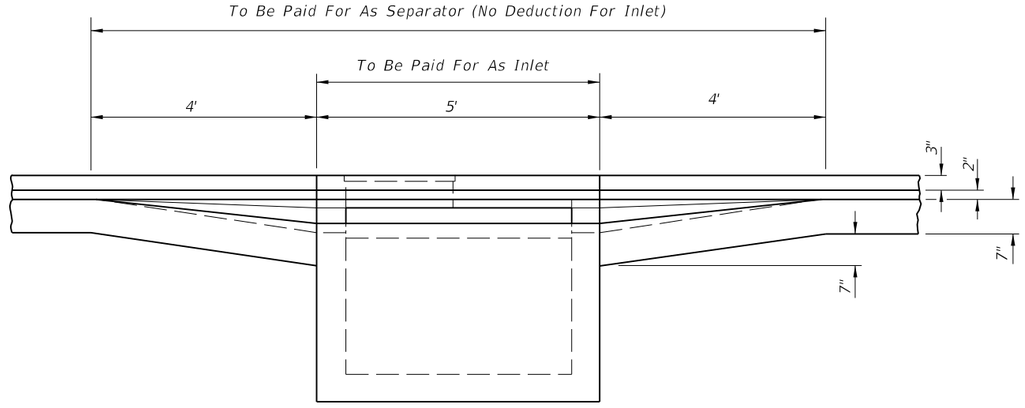

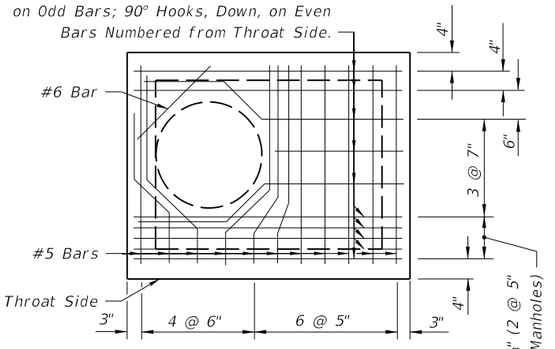

REINFORCING STEEL DIAGRAM TOP SLAB OF INLETS

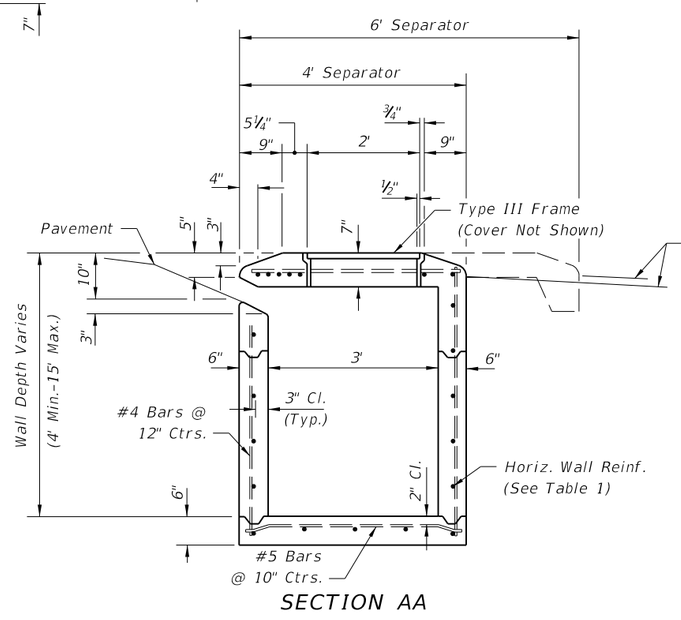

SECTION AA

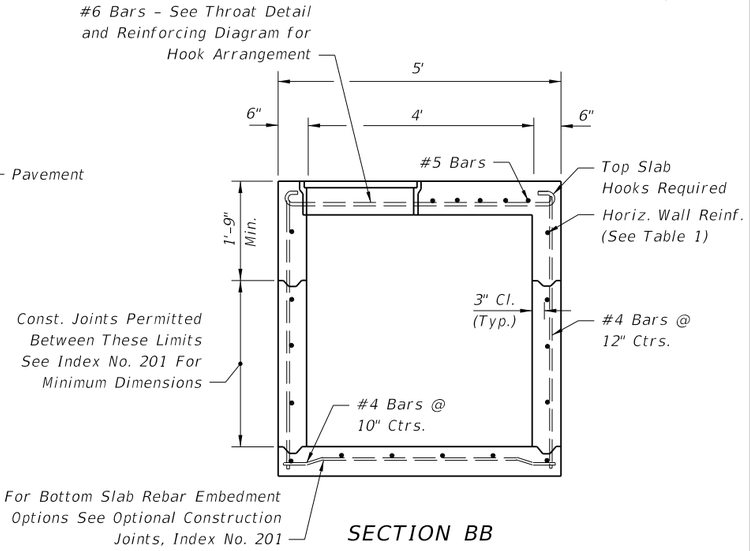

SECTION BB

GENERAL NOTES

1. This inlet is used in Traffic Separators Types I and II; or, in separators constructed with Curbs Types A, B and E and sidewalk paving, which cannot accommodate Inlets Types 1, 2, 3, 4, 5, or 6. Use of this Inlet on through traffic side of the separator is not permitted in medians with Curb Types A and B. Locate inlet outside of pedestrian way.

2. All reinforcing to be Grade 60 bars with 2" min. cover unless otherwise shown. See Index No. 201 for equivalent area of welded wire fabric. Cut or bend bars out of way of pipe when necessary. Bars to clear pipe by 1½"

3. Recommended maximum pipe sizes are 24" longitudinal and 30" transverse. For larger pipe, inlets with Alt. B bottoms, Index No. 200 are recommended.

4. For supplementary details see Index No. 201.

5. All dimensions are for both precast and cast-in-place inlets unless otherwise shown.

6. Inlet to be paid for under the contract unit price for Inlets (Curb) (Type 7), Each.

C:\d\projects\standards\roadway\00200-s\00212-01.dgn
rd960rh
1:52:03 PM
6/28/2012

LAST REVISION	REVISION	DESCRIPTION:				
07/01/10			FDOT DESIGN STANDARDS 2013	CURB INLET TYPE 7	INDEX NO. 212	SHEET NO. 1

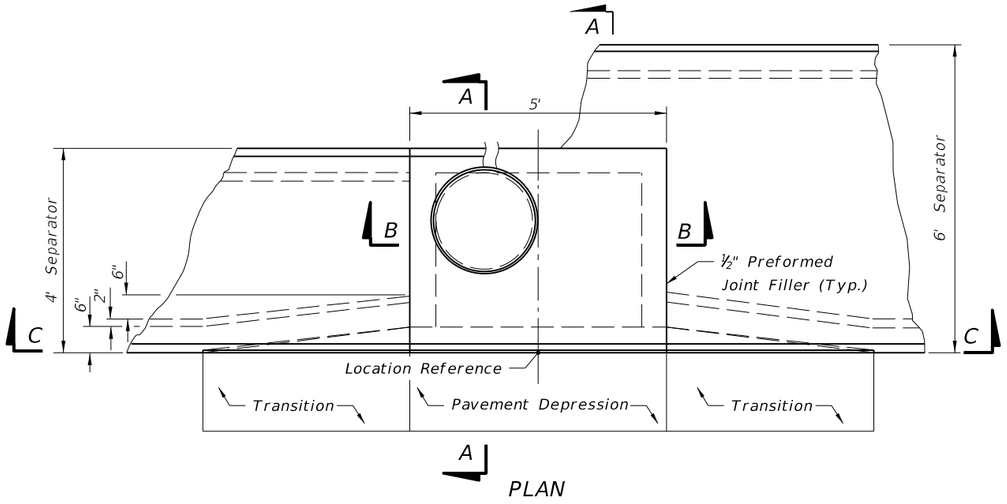

PLAN

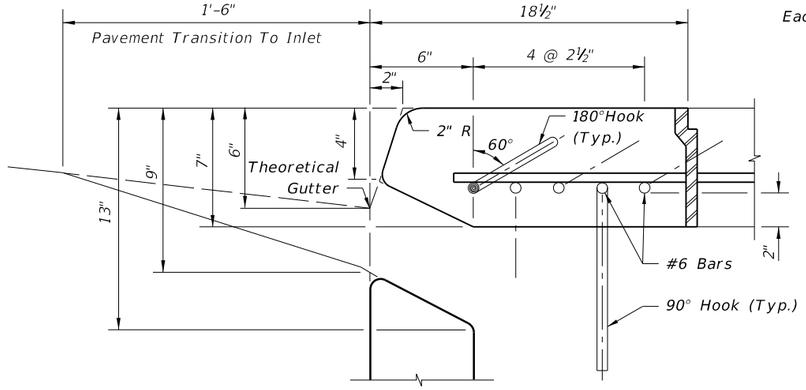

THROAT DETAIL (SECTION AA)

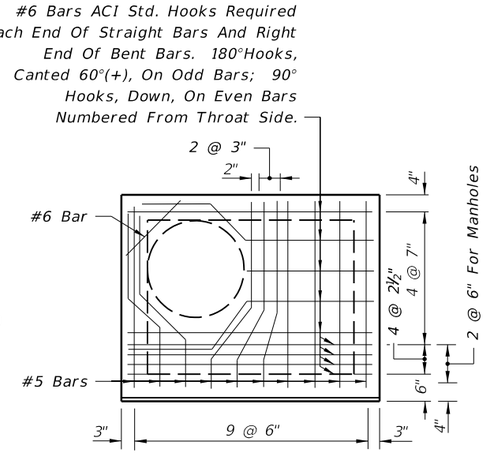

REINFORCING STEEL DIAGRAM
TOP SLAB OF INLET

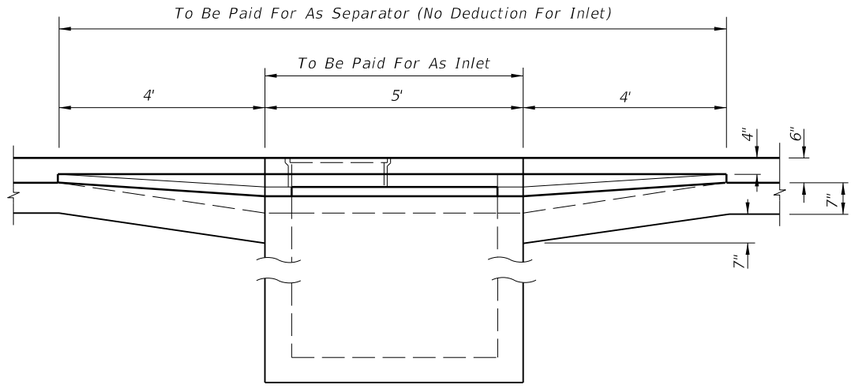

SECTION CC

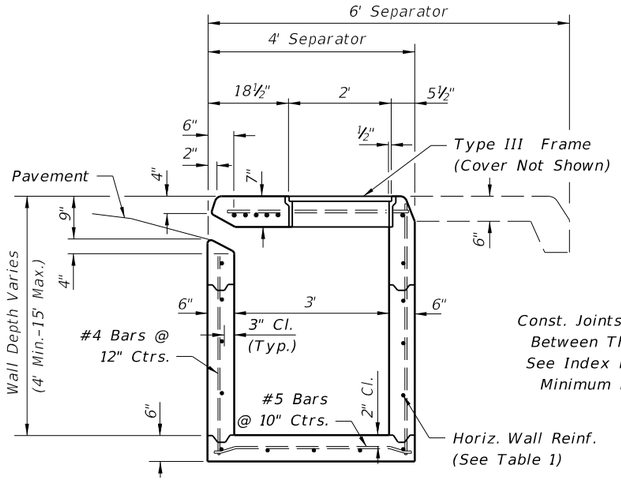

SECTION AA

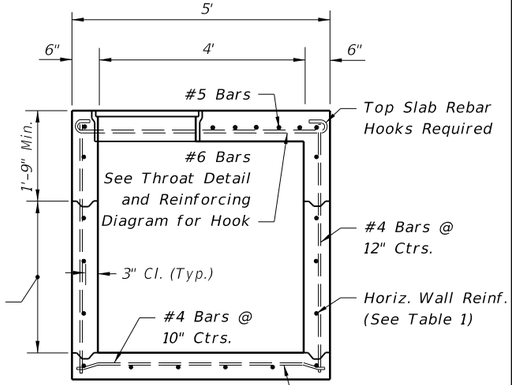

SECTION BB

GENERAL NOTES

1. This inlet is to be used only in Traffic Separators Types IV and V; or, in separators constructed with Curbs Types D and F and sidewalk paving, which cannot accommodate Inlets Types 1, 2, 3, 4, 5 or 6. Use of this inlet on the through traffic side of the separator should be avoided in medians constructed with Curb Type D (Curb inlets Types 9 or 10 are recommended). Locate inlet outside of pedestrian way.

2. All reinforcing to be Grade 60 bars with 2" min. cover unless otherwise shown. See Index No. 201 for equivalent area of welded wire fabric. Cut or bend bars out of way of pipe when necessary. Bars to clear pipe by 1½".

3. Recommended maximum pipe sizes are 24" longitudinal and 30" transverse. For larger pipe, inlets with Alt. B bottoms, Index No. 200 are recommended.

4. For supplemental details and notes see Index No. 201.

5. All dimensions are for both precast and cast-in-place inlets unless otherwise shown.

6. Inlet to be paid for under the contract unit price for Inlets (Curb) (Type 8), Each.

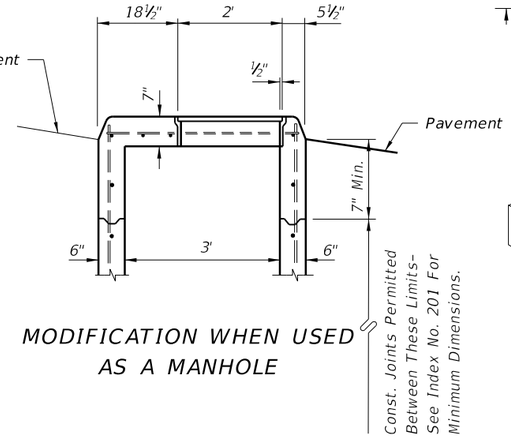

MODIFICATION WHEN USED
AS A MANHOLE

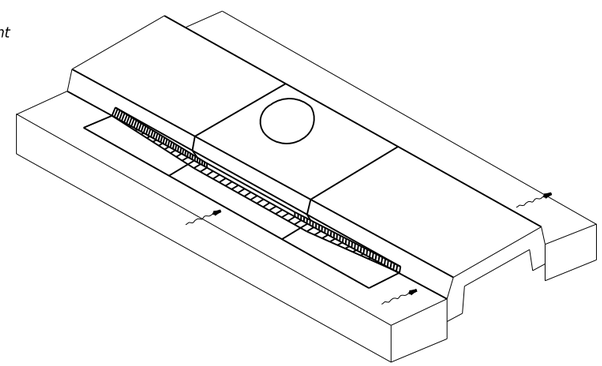

HORIZONTAL WALL REINFORCING SCHEDULE (TABLE 1)

WALL DEPTH	SCHEDULE	AREA (in.²/ft.)	MAX. SPACING	
			BARS	WWF
0' -6'	A12	0.20	12"	8"
6' -10'	A6	0.20	6"	5"
10'-13'	A4	0.20	4"	3"
10'-15'	B5.5	0.24	5½"	5"

C:\d\projects\standards\roadway\00200-s\00213-01.dgn
rd960rh
1:52:05 PM
6/28/2012

LAST REVISION	REVISION	DESCRIPTION:		FDOT DESIGN STANDARDS 2013	CURB INLET TYPE 8	INDEX NO.	SHEET NO.
07/01/10						213	1

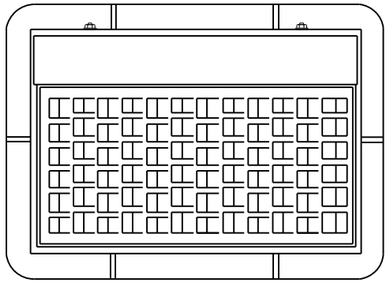

TOP VIEW

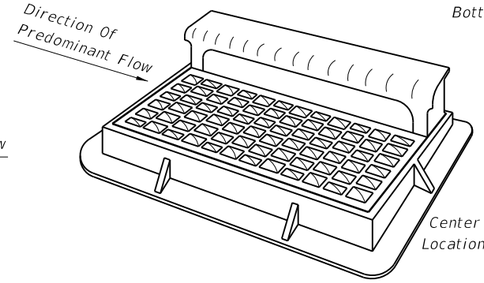

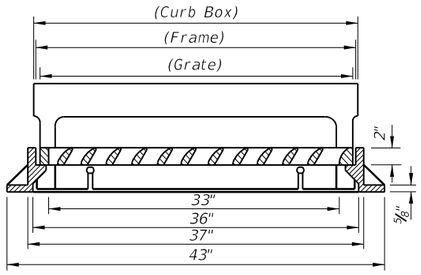

LONGITUDINAL SECTION

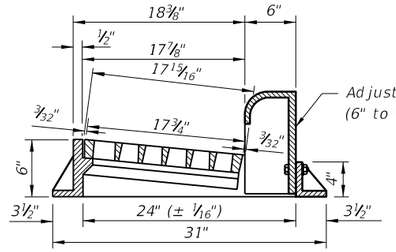

TRANSVERSE SECTION

FRAME AND GRATE

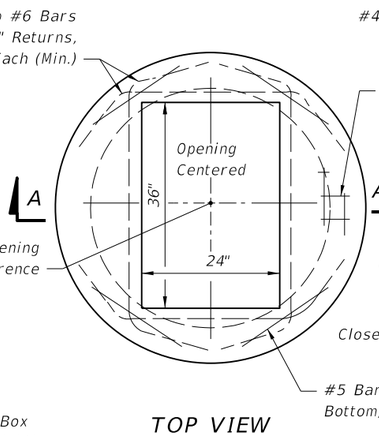

TOP VIEW

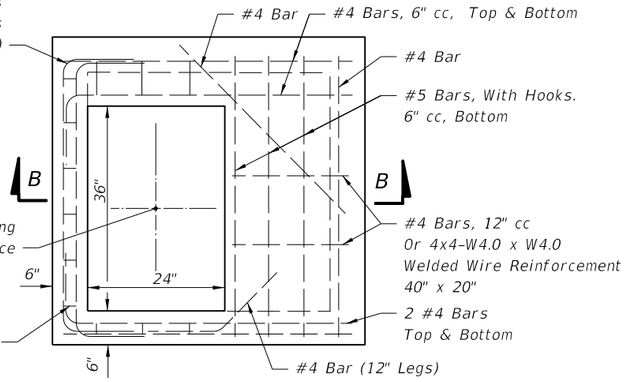

TOP VIEW

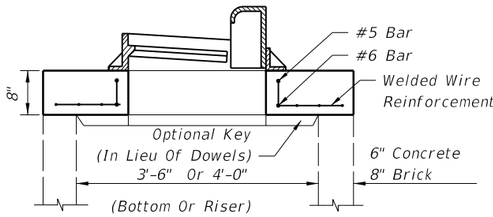

SECTION AA
(SEE NOTE 6 BELOW)

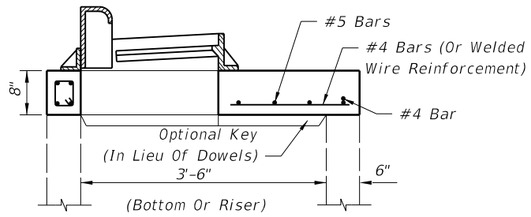

SECTION BB
(SEE NOTE 6 BELOW)

TOP SLABS

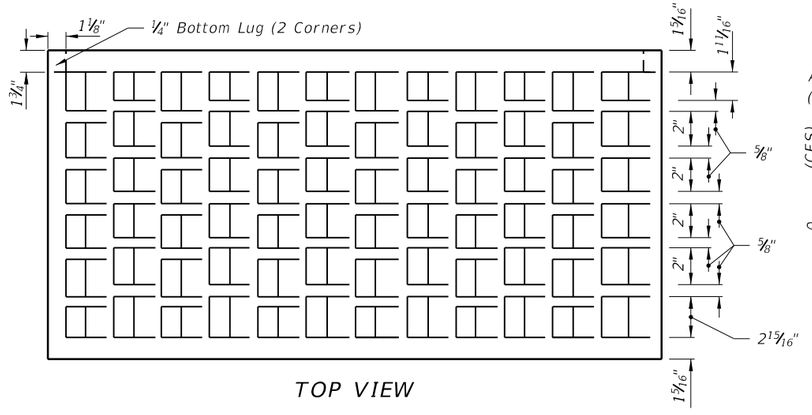

TOP VIEW

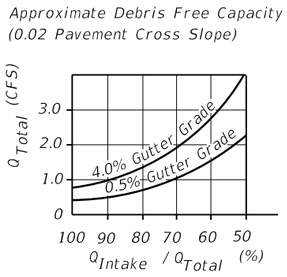

EFFICIENCY CURVE

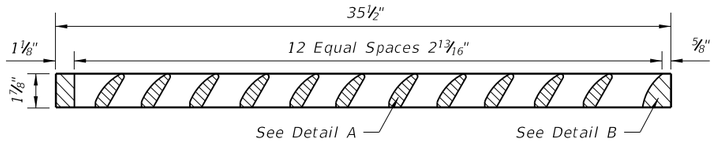

SECTION

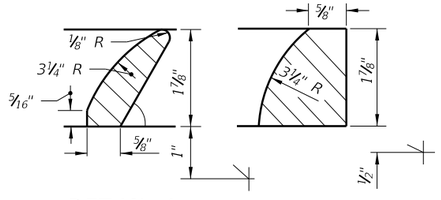

DETAIL A

DETAIL B

GRATE DETAIL

GENERAL NOTES

1. This inlet is primarily intended for locations with light to moderate flows where right of way does not permit the use of throated Curb Inlets Types 1 through 6. The typical application is on curb returns to city streets. The inlet grate is suitable for pedestrian and bicycle traffic.

2. This inlet to be located outside of curb ramp area in vertical faced curbs such as Curb and Gutter Type F. Grate shall be oriented with vanes directed toward Predominant Flow.

3. For structure bottoms see Index No. 200. For supplemental details see Index No. 201.

4. All steel in slab tops shall have 1¼" minimum cover unless otherwise shown. Tops shall be either cast-in-place or precast concrete.

5. For Alternate B applications, top slab openings shall be placed such that 2 edges of inlet frame will be located directly above bottom wall or riser wall.

6. When used on a structure with dimensions larger than those detailed above and risers are not applied, the top slab shall be constructed using Index No. 200 with the slab opening adjusted to 24"x36". The "Special Top Slab" on Index No. 200 is not permitted.

7. Frame may be adjusted with one to six courses of brick.

8. Cast iron frame grate and hood to be U.S. Foundry 5130-6016, Neenah Foundry R-3067-L, or approved equal. Inlet and grate detail shown is Neenah R-3067-L. Vaned grates with approximately equal openings will be permitted that satisfy AASHTO HS-20 loading. Grates shall be reversible, right or left.

C:\d\projects\standards\roadway\00200-s\00214-01.dgn rd960rh 1:52:07 PM 6/28/2012

LAST REVISION	REVISION	DESCRIPTION:				
07/01/05			FDOT DESIGN STANDARDS 2013	CURB INLET TOP TYPE 9	INDEX NO. 214	SHEET NO. 1

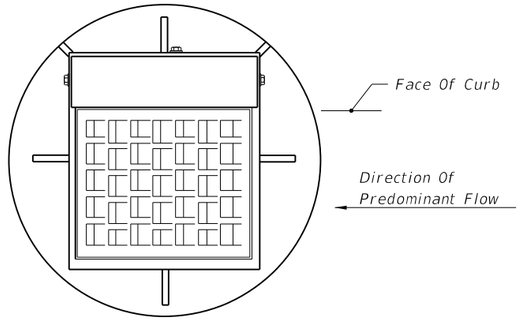

TOP VIEW

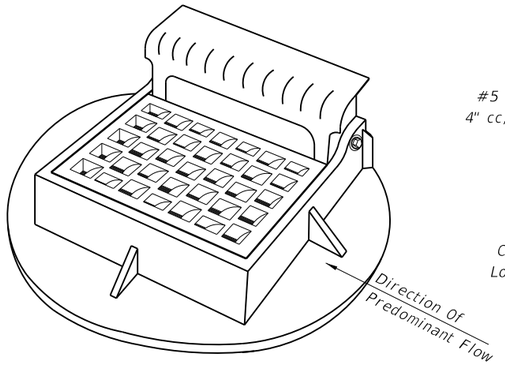

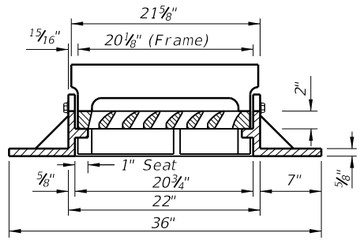

LONGITUDINAL SECTION

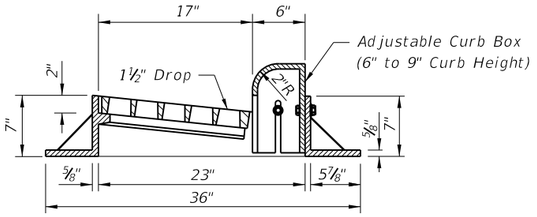

TRANSVERSE SECTION

FRAME AND GRATE

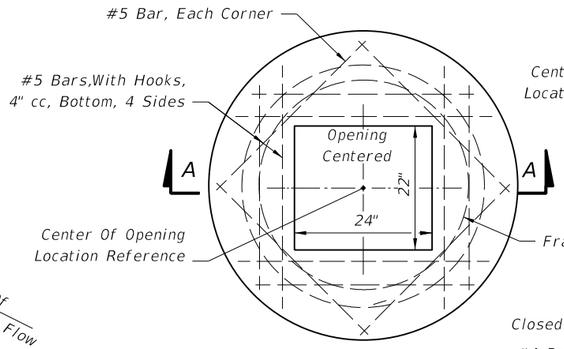

TOP VIEW

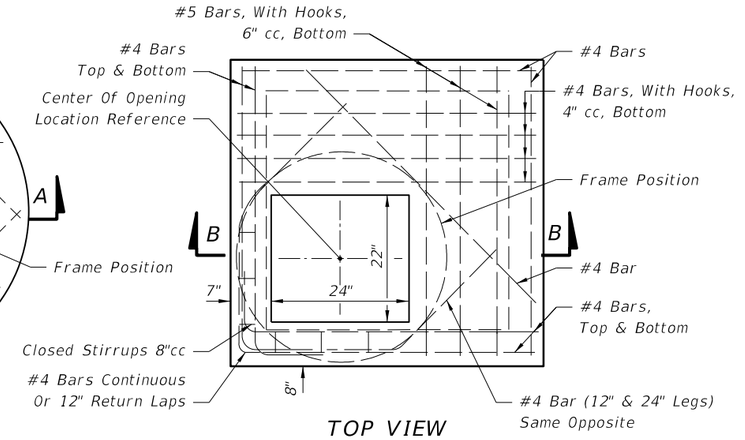

TOP VIEW

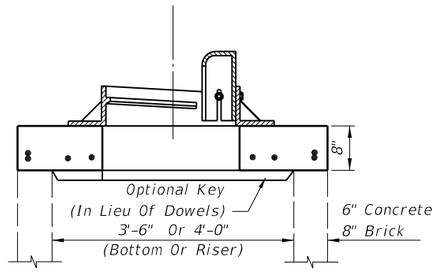

SECTION AA
(SEE NOTE 6 BELOW)

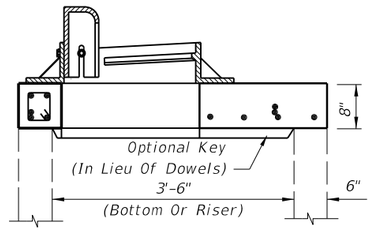

SECTION BB
(SEE NOTE 6 BELOW)

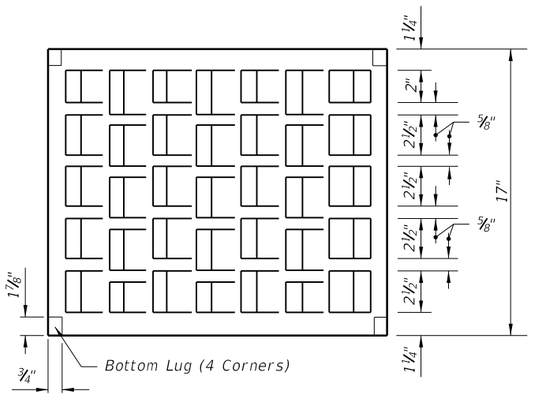

PLAN

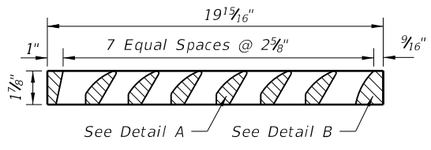

SECTION

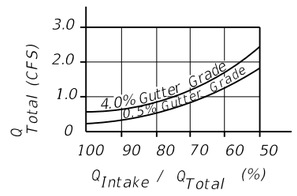

EFFICIENCY CURVE

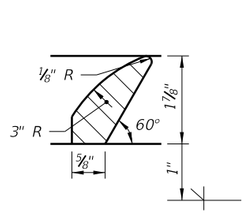

DETAIL A

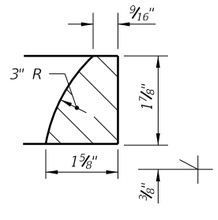

DETAIL B

GRATE DETAIL

TOP SLABS

GENERAL NOTES

1. This inlet is primarily intended for locations with light flows where right of way does not permit the use of throated Curb Inlets Types 1 through 6. The typical application is on curb returns to city streets. The inlet grate is suitable for pedestrian and bicycle traffic.

2. This inlet to be located outside of curb ramp area in vertical faced curbs such as Curb and Gutter Type F. Grate shall be oriented with vanes directed toward predominant flow.

3. For structure bottoms see Index No. 200. For supplemental details see Index No. 201.

4. All steel in slab tops shall have 1¼" minimum cover unless otherwise shown. Tops shall be either cast-in-place or precast concrete.

5. For Alternate B applications, top slab openings shall be placed such that 2 edges of inlet frame will be located directly above bottom or riser walls.

6. When used on a structure with dimensions larger than those detail above and risers are not applied, the top slab shall be constructed using Index No. 200 with the slab opening adjusted to 22"x24". The "Special Top Slab" on Index No. 200 is not permitted.

7. Frame may be adjusted with one to six courses of brick.

8. Cast iron frame grate and hood to be U.S. Foundry 5161-6019, Neenah Foundry R-3065-L, or approved equal. Inlet and grate detail shown is Neenah R-3065-L. Vaned grates with approximately equal openings will be permitted that satisfy AASHTO HL-93 loading. Grates shall be reversible.

C:\d\projects\standards\roadway\00200-s\00215-01.dgn rd960rh 1:52:09 PM 6/28/2012

LAST REVISION	REVISION	DESCRIPTION:			INDEX NO.	SHEET NO.
04			FDOT DESIGN STANDARDS 2013	CURB INLET TOP TYPE 10	215	1

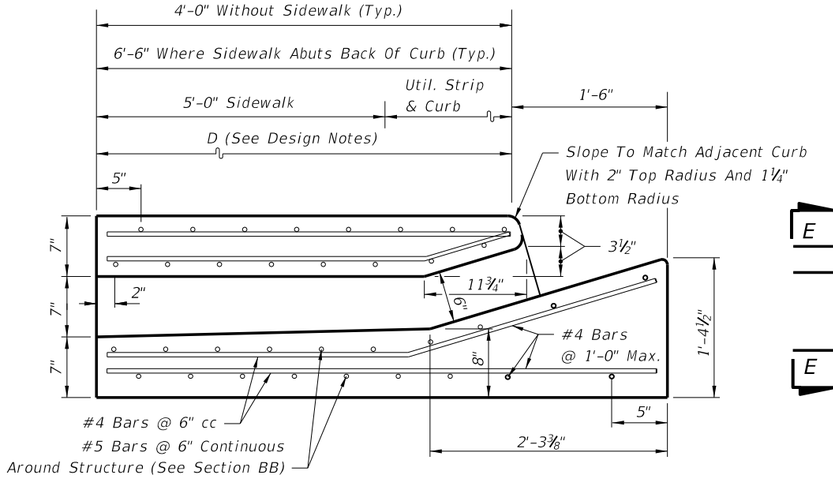

SECTION AA

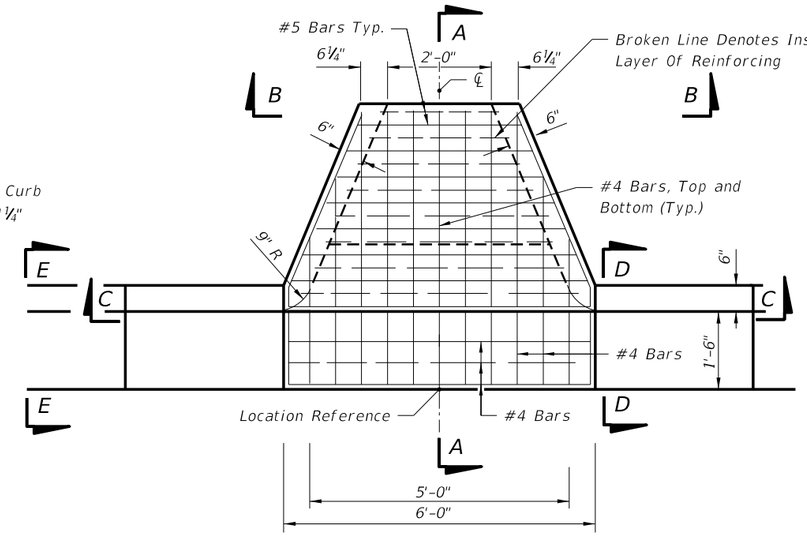

TOP VIEW

GENERAL NOTES

1. The finished grade and slope of the inlet top are to conform with the finished cross slope and grade of the proposed sidewalk and/or border.
2. When inlets are to be constructed on a curve, refer to the plans to determine the radius and, where necessary, modify the inlet details accordingly. Bend steel when necessary.
3. All steel shall have 1¼" minimum cover unless otherwise shown. Inlets can be either cast-in-place or precast concrete. Chamfer all exposed edges ¾".
4. All reinforcement is ASTM A615/A615M Grade 60 steel, either smooth or deformed. Equivalent area grade 40 steel or 65 ksi welded wire fabric may be substituted.
5. Inlets to be paid for under the contract unit price for Inlets (Closed Flume) EA.

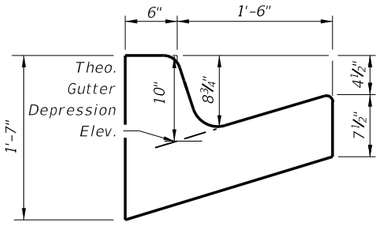

SECTION DD

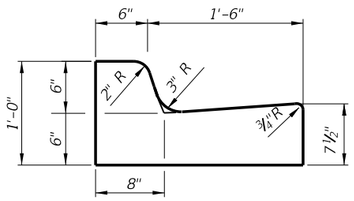

Curb And Gutter Type F
SECTION EE

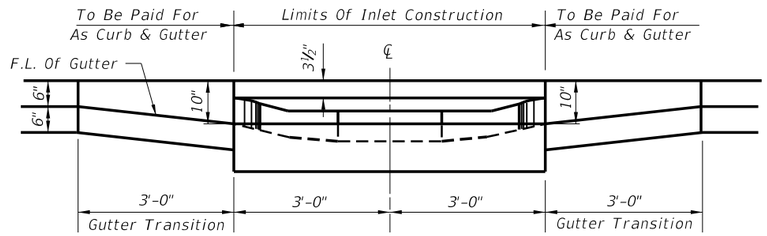

SECTION CC

SINGLE BARREL FLUME

DESIGN NOTES

1. These inlets are designed for use with Type F curb and gutter only. Locate inlet outside of curb ramp area.

   The Single Barrel Flume is intended for locations with light to moderate flows. Multiple Barrel Flumes must be selected to meet design heavy flows.
2. Designer must specify Flume Type, "D" dimension, number of barrels and guiderail requirements in plans.
3. Designer must specify where energy dissipating bricks are required.

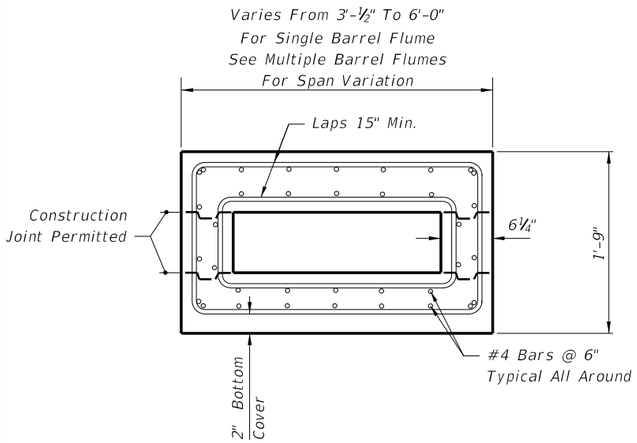

SECTION BB

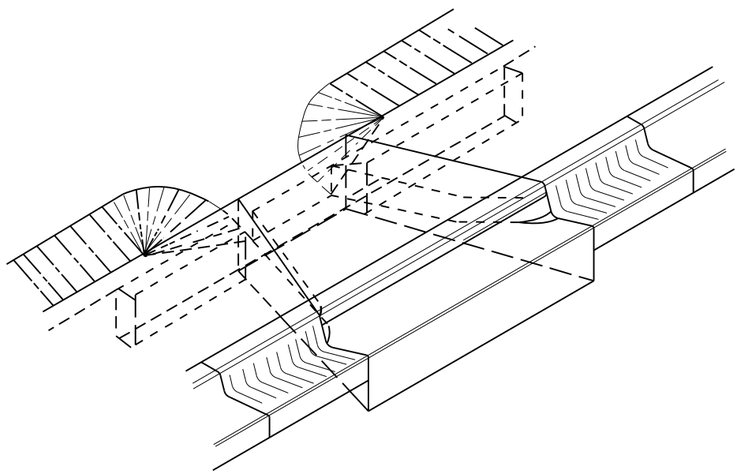

SINGLE BARREL FLUME DEPICTED

FLUME W/SIDEWALK INLET (CLOSED FLUME) TYPE I

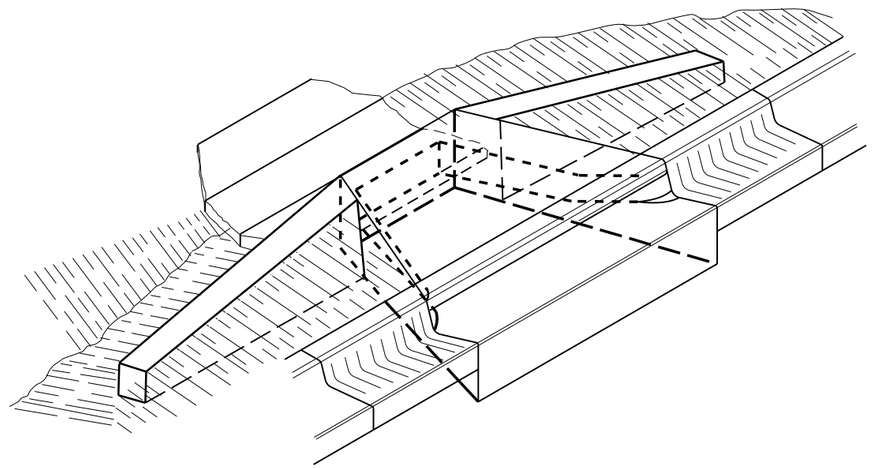

SINGLE BARREL FLUME DEPICTED

FLUME W/O SIDEWALK INLET (CLOSED FLUME) TYPE II

C:\d\projects\standards\roadway\00200-s\00216-01.dgn rd960rh 1:52:11 PM 6/28/2012

LAST REVISION	REVISION	DESCRIPTION:				
07/01/07			FDOT DESIGN STANDARDS 2013	CLOSED FLUME INLET	INDEX NO. 216	SHEET NO. 1

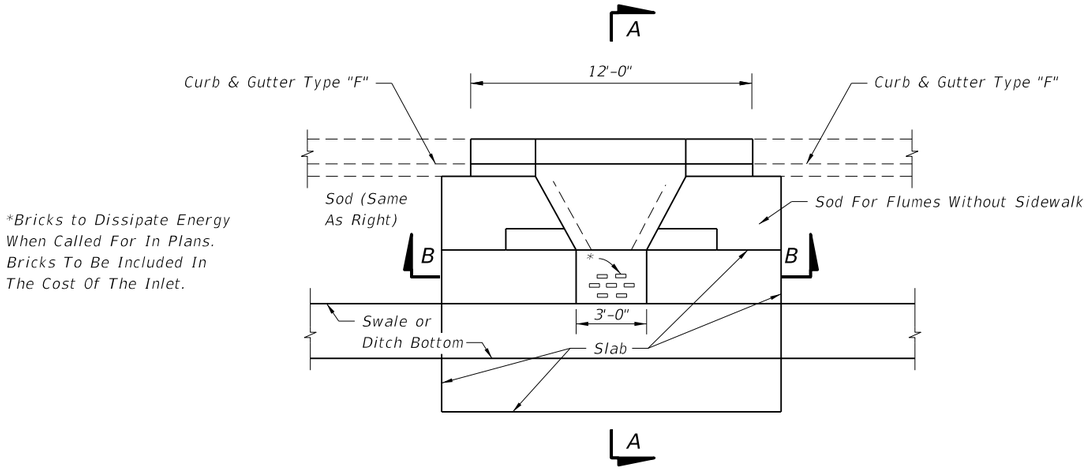

SINGLE BARREL FLUME DEPICTED

PLAN

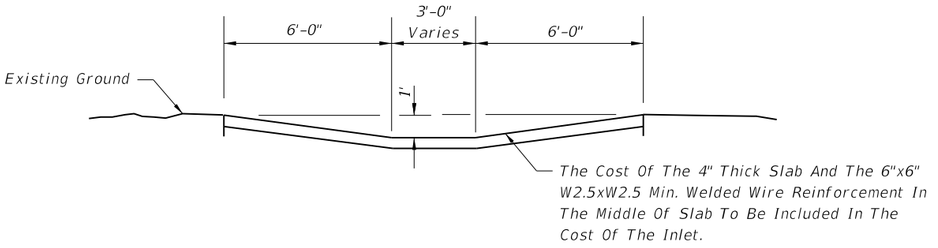

SINGLE BARREL FLUME DEPICTED

SECTION BB

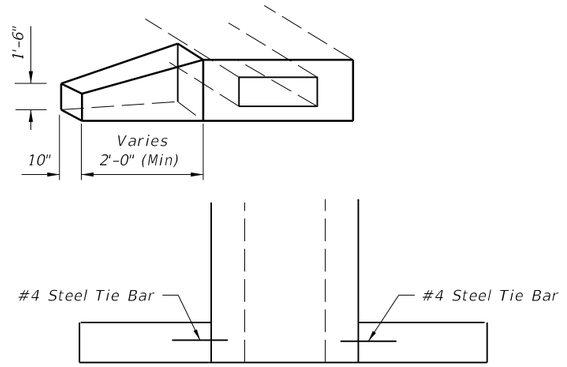

SINGLE BARREL FLUME DEPICTED

ENDWALL

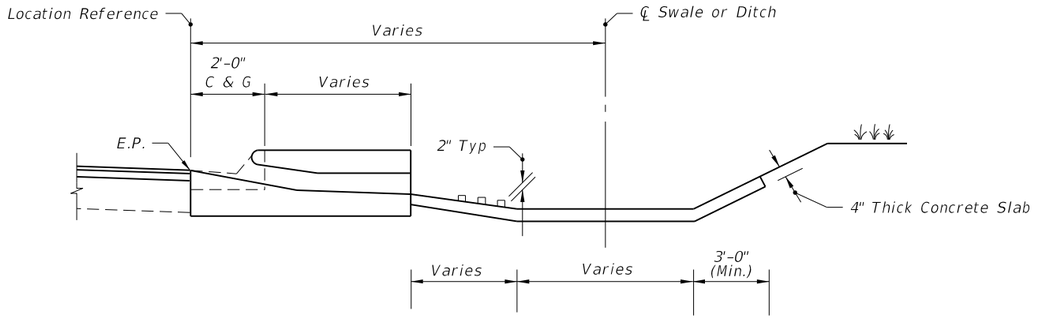

SECTION AA

SLOPES, DITCH APRON AND ENDWALLS

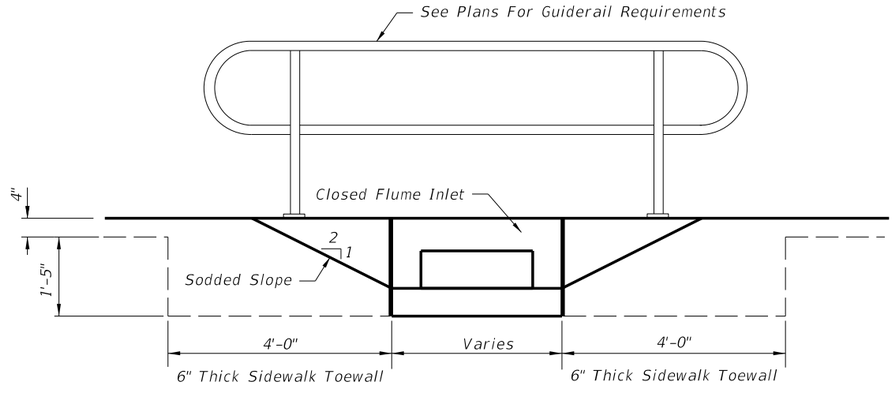

SINGLE BARREL FLUME DEPICTED

ELEVATION

GUIDERAIL FOR FLUME IN SIDEWALK

C:\d\projects\standards\roadway\00200-s\00216-02.dgn
rd960rh
1:52:13 PM
6/28/2012

LAST REVISION	REVISION	DESCRIPTION:		FDOT DESIGN STANDARDS 2013	CLOSED FLUME INLET	INDEX NO.	SHEET NO.
07						216	2

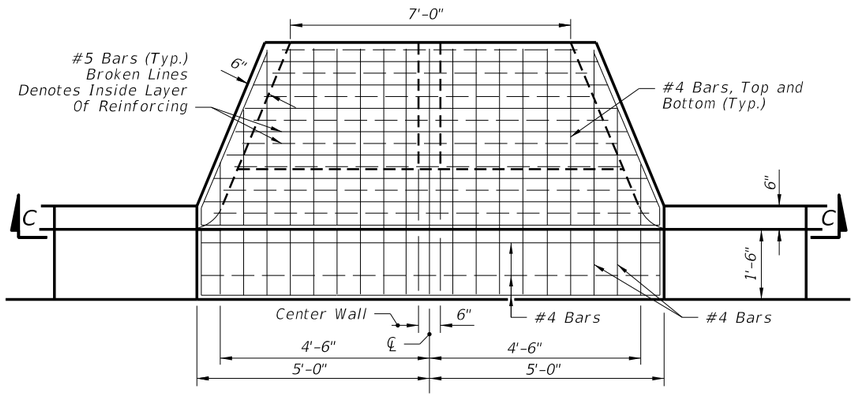

TOP VIEW

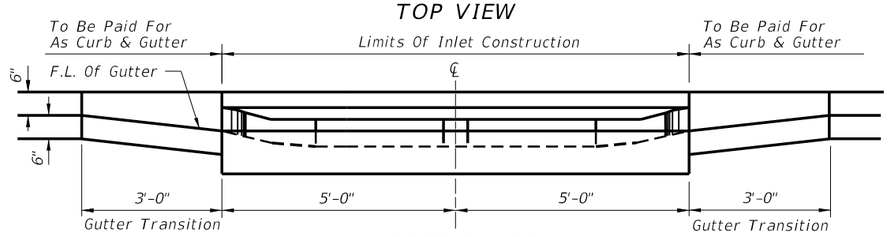

SECTION CC

DOUBLE BARREL FLUME

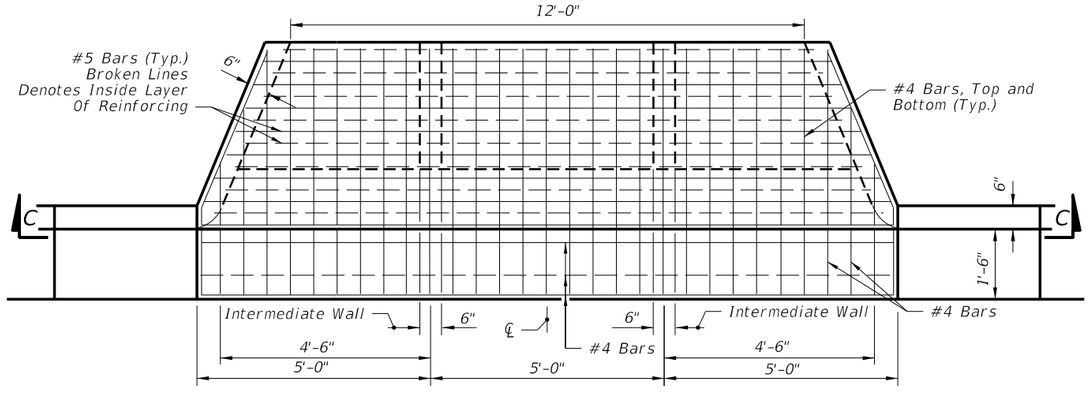

TOP VIEW

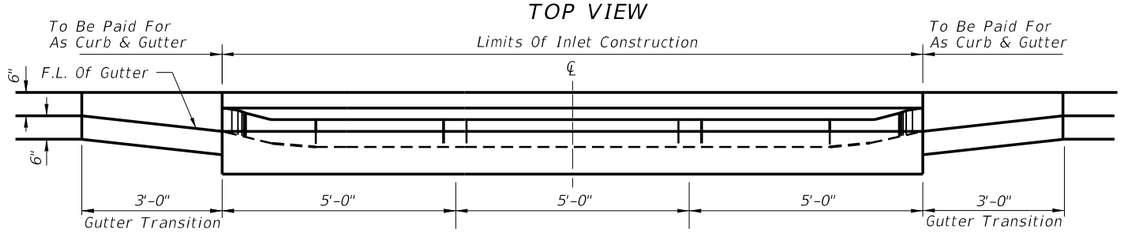

SECTION CC

TRIPLE BARREL FLUME

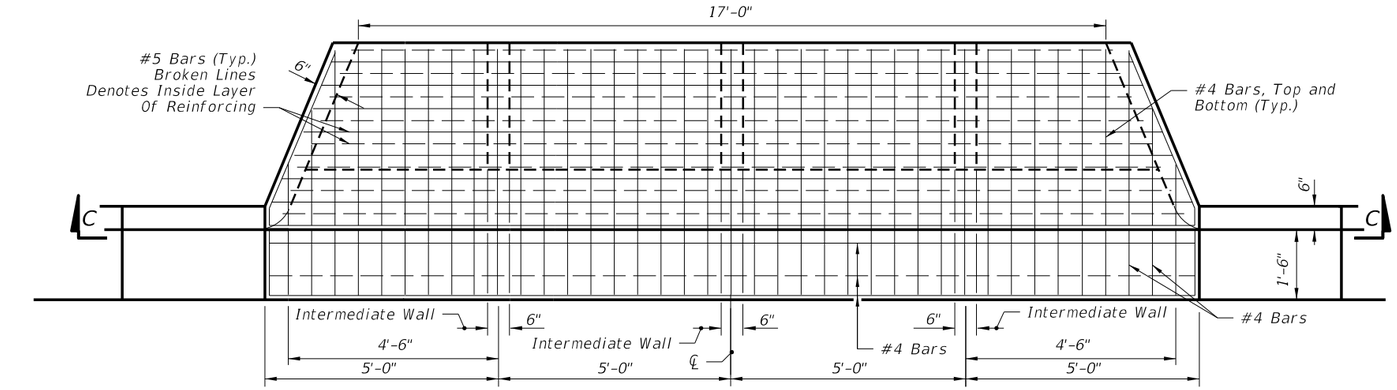

TOP VIEW

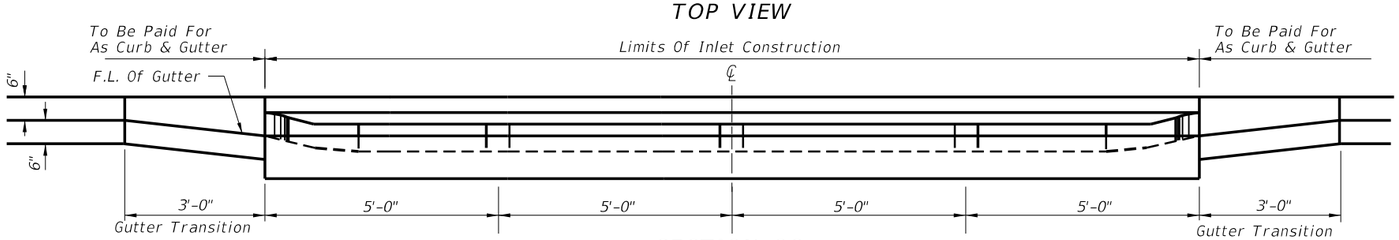

SECTION CC

QUADRUPLE BARREL FLUME

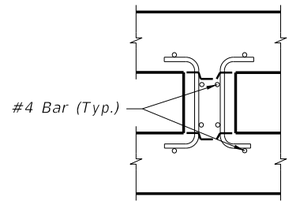

INTER-WALL REINFORCING

NOTE: See Single Barrel Flume For Base Dimensions.

C:\d\projects\standards\roadway\00200-s\00216-03.dgn
rd960rh
1:52:15 PM
6/28/2012

LAST REVISION	REVISION	DESCRIPTION:			INDEX NO.	SHEET NO.
02			FDOT DESIGN STANDARDS 2013	CLOSED FLUME INLET	216	3

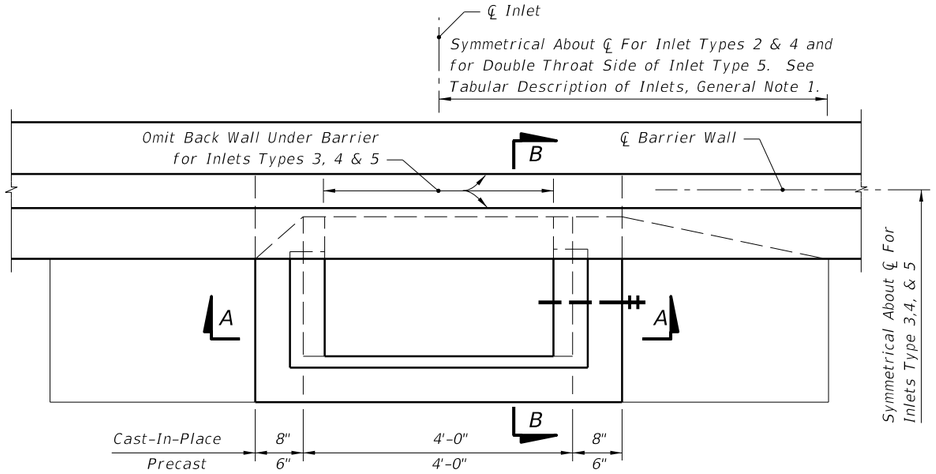

PLAN (INLETS TYPES 1 THRU 5)

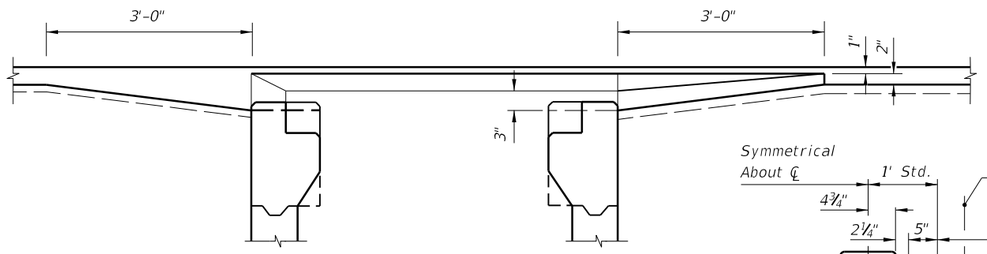

SECTION CC

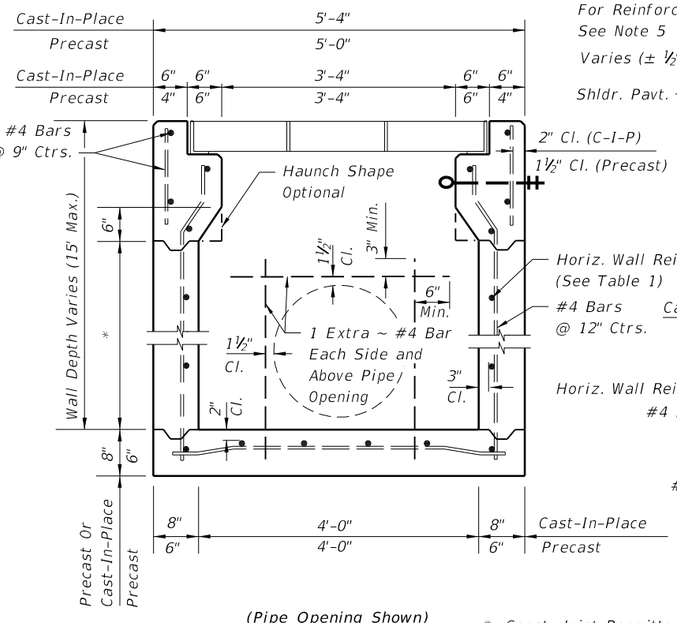

(Pipe Opening Shown)
SECTION AA

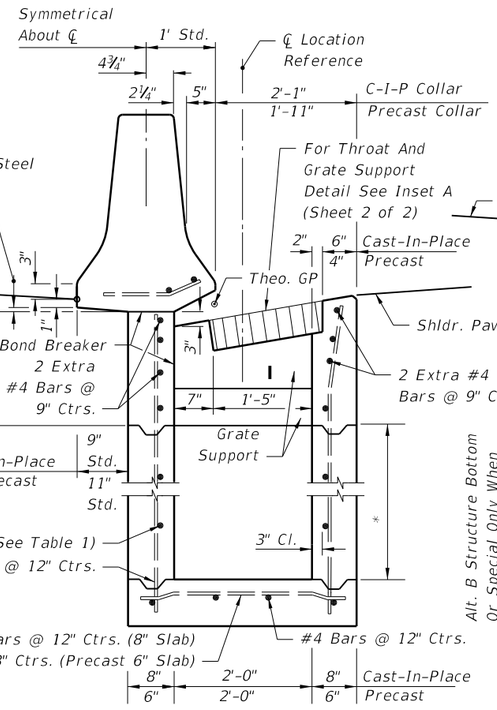

SECTION FOR INLETS TYPES 1 & 2

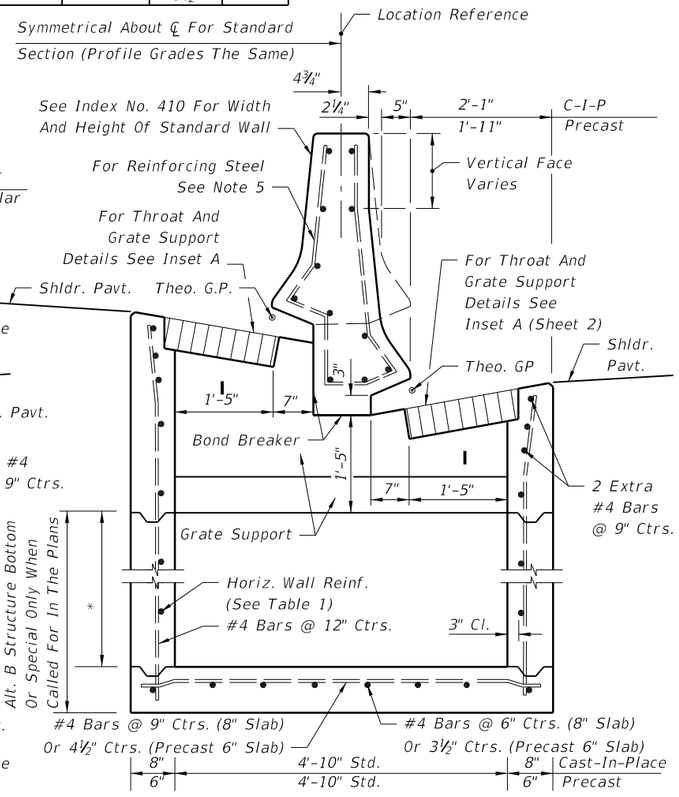

(Pipe Opening Shown)
SECTION BB

SECTION FOR INLETS TYPES 3, 4 & 5
(NON-SYMMETRICAL SECTION SHOWN)

* Const. Joint Permitted Between These Limits See Index No. 201 For Min. Dimensions

GRATE SLOPE & DROP HEIGHT

Shoulder Slope	Grate Slope Rate	Drop Height		Remarks
		CIPL	Precast	
0.03	1:6	1 9/16"	1 5/16"	Std. Median Concrete Shoulder
0.05	1:6	1 1/16"	7/8"	Std. Median Flexible Shoulder
0.06	1:6	13/16"	5/8"	
0.07	1:5	1 5/8"	1 3/8"	
0.08	1:5	1 3/8"	1 3/16"	
0.09	1:5	1 1/8"	15/16"	
0.10	1:5	7/8"	1 1/16"	e (max)

HORIZONTAL WALL REINFORCING SCHEDULE (TABLE 1)

WALL DEPTH	SCHEDULE	AREA (in.²/ft.)	MAX. SPACING	
			BARS	WWF
0'-3'	A12	0.20	12"	8"
3'-6'	A6	0.20	6"	5"
6'-9'	B5.5	0.24	5½"	5"
9'-15'	C6.5	0.37	6½"	6"

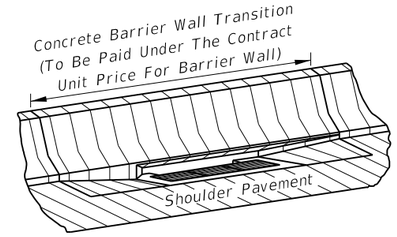

PICTORIAL VIEW (TYPE I SHOWN)

GENERAL NOTES

1. Inlet Descriptions:
   Type 1 Single throat, one side of barrier wall.
   Type 2 Double throats, one side of barrier wall.
   Type 3 Two single throats, opposite side of barrier wall.
   Type 4 Two double throats, opposite sides of barrier wall.
   Type 5 Double throats, one side of barrier wall, and single throat other side of barrier wall.

2. For grate details see Index No. 220. The parallel bar grate shall be used unless the reticuline grate is called for in the plans. The reticuline grate shall be specified where bicycle traffic is anticipated. Used in areas of occasional pedestrian traffic. Not suitable for use in pedestrian traffic or bicycle way.

3. All exposed edges and corners shall be ¾" chamfer or tooled to ¼" radius.

4. For standard concrete barrier wall dimensions, and for dimensions of concrete barrier wall incorporating light standards within the wall, see Index No. 410.

5. Reinforcing steel shall have 2" minimum cover. Horizontal wall reinforcing must be positioned 3" from the inside face unless otherwise shown.

6. All reinforcing is Grade 60 #4 bars. See Index No. 201 for equivalent area of welded wire fabric for inlet. Longitudinal steel bars extend over full length of concrete barrier wall transition. Tie bars @ 12" ctrs. Reinforcing to be paid for under the contract unit price for Concrete Barrier Wall. LF.

7. For supplemental details see Index No. 201.

8. All dimensions are for both precast and cast-in-place inlets unless otherwise noted.

9. Inlets to be paid for under the contract unit price for Inlets (Median Barrier Type_), EA. Barrier wall to be paid for under the contract unit price for Concrete Barrier Wall, LF.

C:\d\projects\standards\roadway\00200-s\00217-01.dgn rd960rh 1:52:17 PM 6/28/2012

LAST REVISION	REVISION	DESCRIPTION:				
07/01/10			FDOT DESIGN STANDARDS 2013	MEDIAN BARRIER INLETS TYPES 1, 2, 3 4 AND 5	INDEX NO. 217	SHEET NO. 1

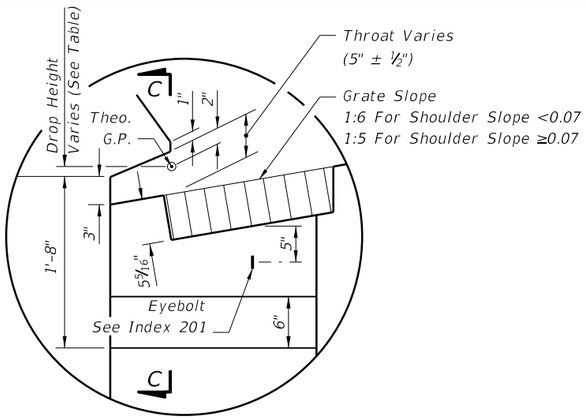

INSET A

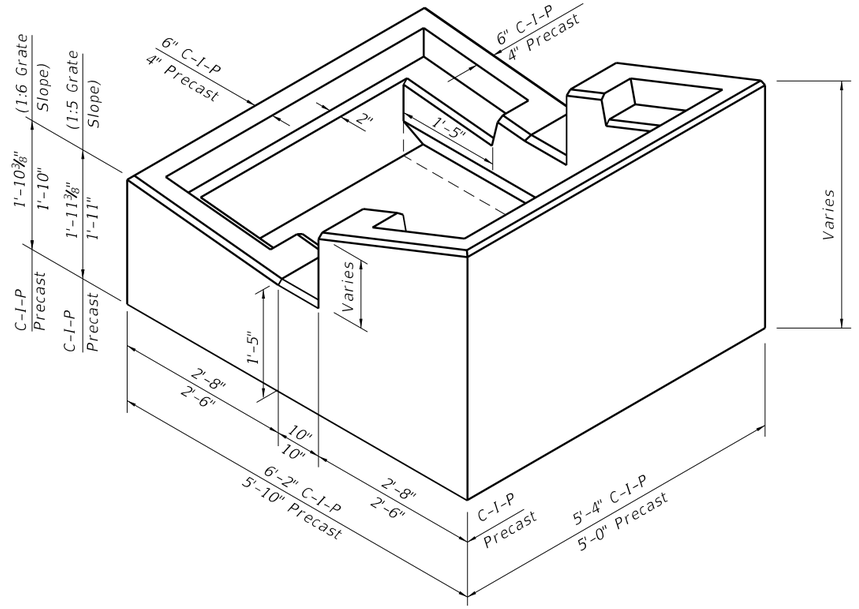

PICTORIAL VIEW OF INLET COLLAR (TYPES 3, 4, & 5)

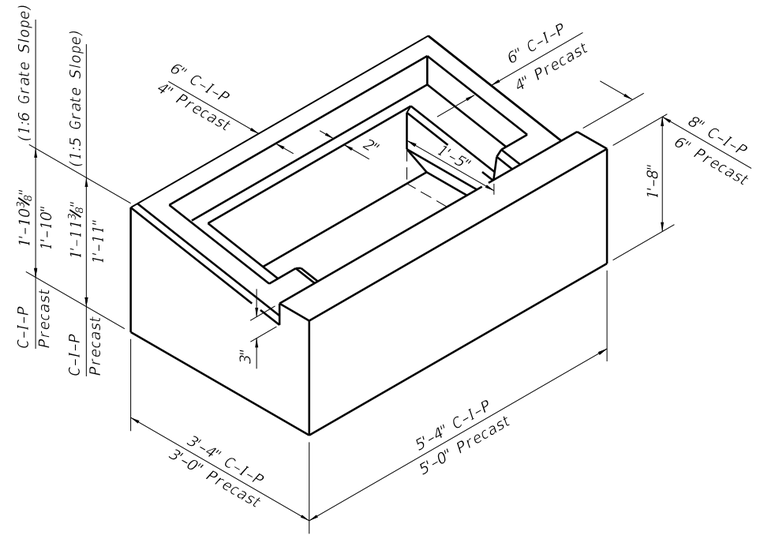

PICTORIAL VIEW OF INLET COLLAR (TYPES 1 & 2)

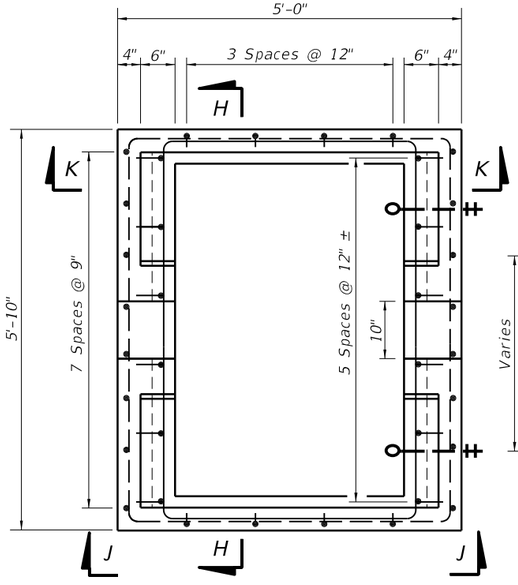

TOP VIEW OF INLET COLLAR WITHOUT GRATE

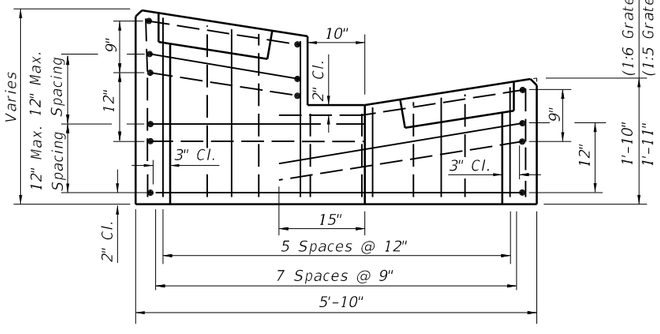

SECTION HH

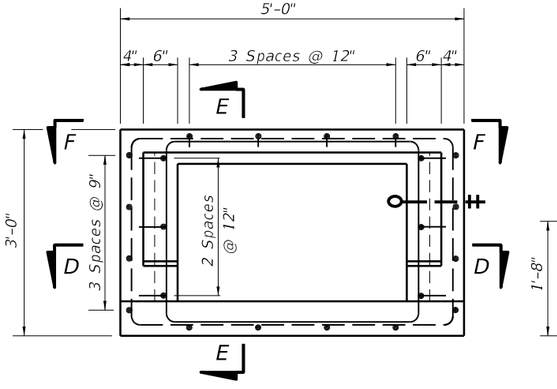

TOP VIEW OF INLET COLLAR WITHOUT GRATE

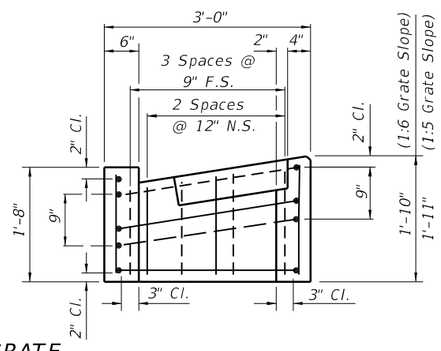

SECTION EE

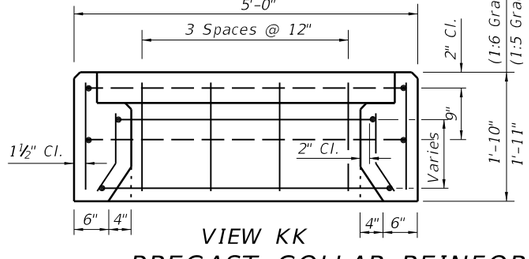

VIEW KK

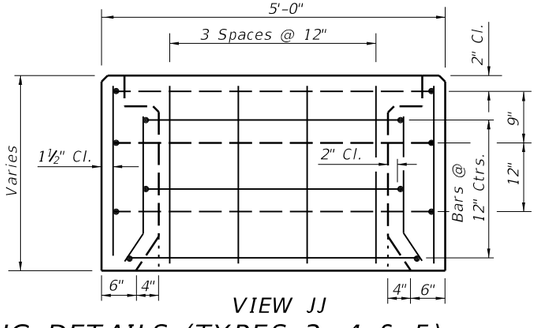

VIEW JJ

PRECAST COLLAR REINFORCING DETAILS (TYPES 3, 4 & 5)
(C-I-P COLLAR REINFORCING DETAILS SIMILAR)

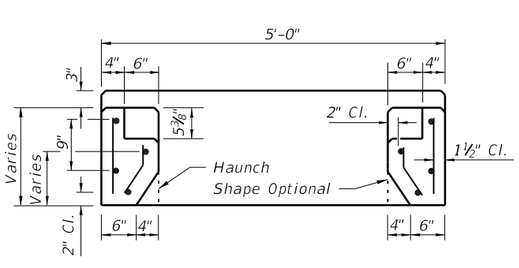

SECTION DD

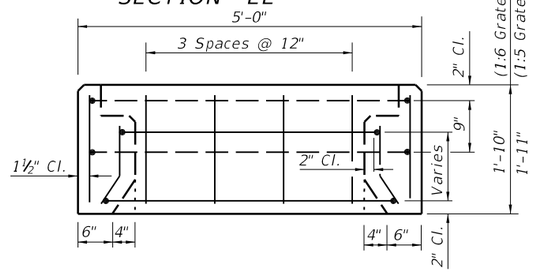

VIEW FF

PRECAST COLLAR REINFORCING DETAILS (TYPES 1 & 2)
(C-I-P COLLAR REINFORCING DETAILS SIMILAR)

LAST REVISION	REVISION	DESCRIPTION:		FDOT DESIGN STANDARDS 2013	MEDIAN BARRIER INLETS TYPES 1, 2, 3 4 AND 5	INDEX NO.	SHEET NO.
07/01/05						217	2

C:\d\projects\standards\roadway\00200-s\00217-02.dgn rd960rh 1:52:20 PM 6/28/2012

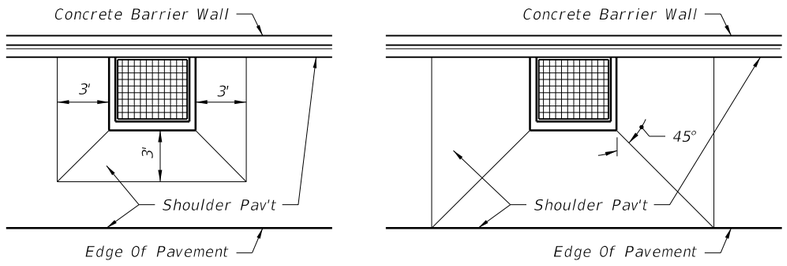

LOW SIDE SUPERELEVATION — HIGH SIDE TRANSITION

PAVEMENT WARP FOR SHOULDERS IN SUPERELEVATION

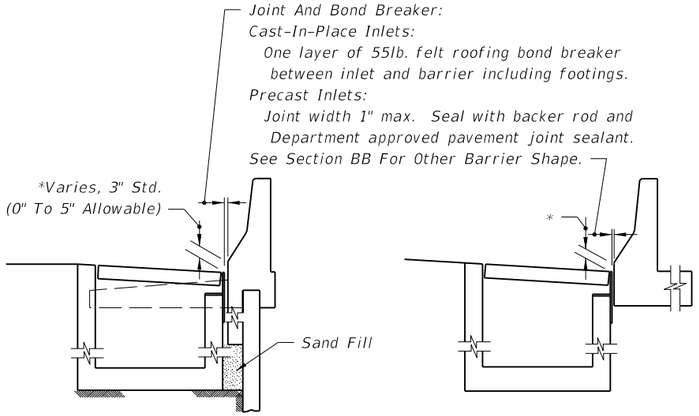

BARRIER WALL / RETAINING WALL — SINGLE FACE ROADWAY BARRIER

INLET SECTION AT WALLS

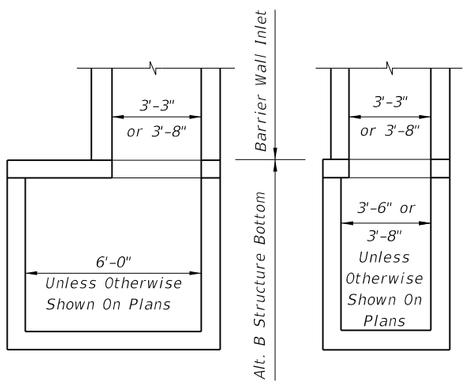

Note: Alt. B Structure Bottom Only. See Index No. 200.

INLET WITH STRUCTURE BOTTOM

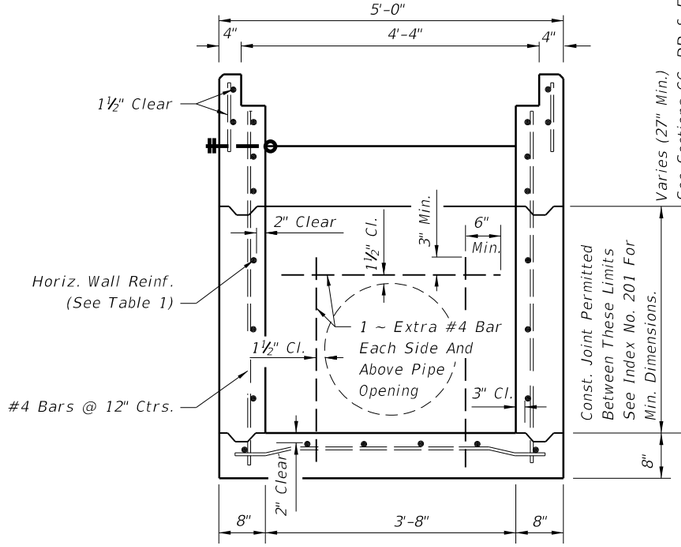

(Pipe Opening Shown)

SECTION AA (WITHOUT GRATE)

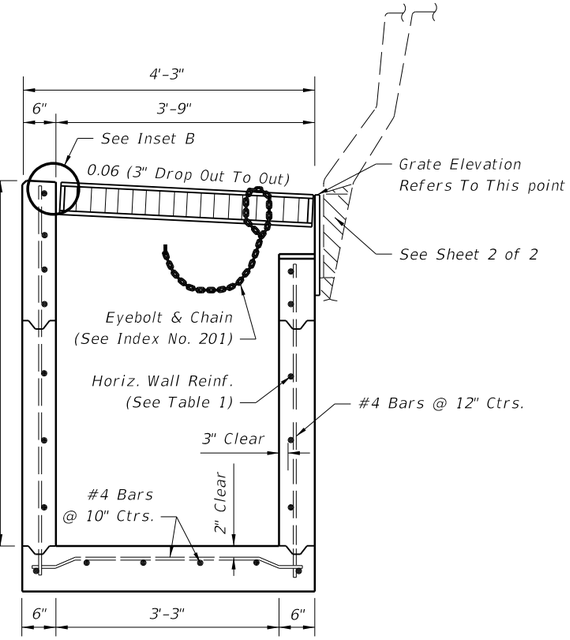

(Pipe Opening Not Shown)

SECTION BB

GENERAL NOTES

1. This inlet is primarily intended for use adjacent to concrete barrier walls on paved shoulders. Use of the inlet adjacent to other wall types shall be approved by the Drainage Engineer. The inlet is suitable for bicycle and occasional pedestrian traffic, with roller bar installation (see inset B) but should not be placed in a designated pedestrian travel way. It is not intended for use in curb and gutter or other areas where throated inlets are required, nor areas subject to high debris.

2. Inlets located in embankments constructed with earth anchored retaining wall shall be designed with minimum depths to reduce adverse impact on the anchorage system. Runs of pipe parallel to and near anchored wall shall be avoided wherever practical. Special coordination must be exercised during the design and construction of storm water systems within anchored wall systems.

3. Inlet bottoms and/or tops may be either precast or cast-in-place. Whether cast as a single unit or as multiple segments, and whether precast or cast-in-place, the upper 2'-3" of the inlet shall be reinforced in accordance with sections CC, DD and EE.

4. All exposed edges and corners shall be ¾" chamfer or tooled to ¼" radius.

5. When Alternate G grate is specified in the plans, the grate is to be hot-dip galvanized after fabrication. Field installation of the filler bar called for in Inset B will not be permitted, thereby requiring tolerance adjustment during fabrication and/or casting, or, matching grate to structure prior to galvanizing.

6. All reinforcing is Grade 60 bars. See Index No. 201 for equivalent area of welded wire fabric.

7. All dimensions are for both precast and cast-in-place inlets unless otherwise noted.

8. For supplemental details see Index Nos. 200 and 201.

9. Inlets to be paid for under the contract unit for Inlets (Barrier Wall), Each.

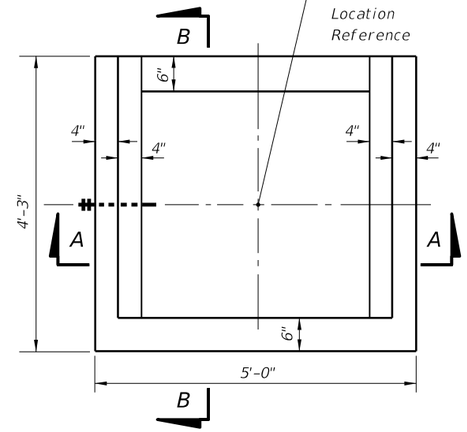

TOP VIEW (WITHOUT GRATE)

HORIZONTAL WALL REINFORCING SCHEDULE (TABLE 1)

WALL DEPTH	SCHEDULE	AREA (in.²/ft.)	MAX. SPACING	
			BARS	WWF
0'-5'	A12	0.20	12"	8"
5'-10'	A6	0.20	6"	5"
10'-15'	A4	0.20	4"	3"
10'-15'	B5.5	0.24	5½"	5"

C:\d\projects\standards\roadway\00200-s\00218-01.dgn
rd960rh
1:52:22 PM
6/28/2012

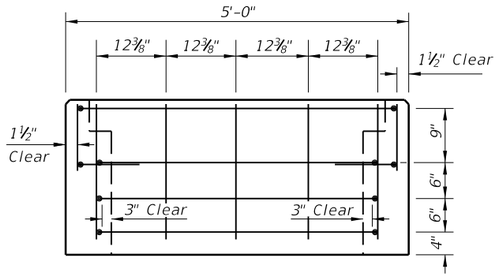

SECTION CC

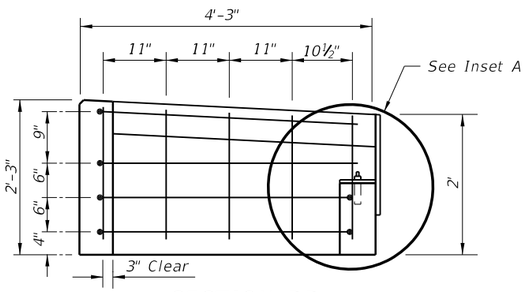

SECTION DD

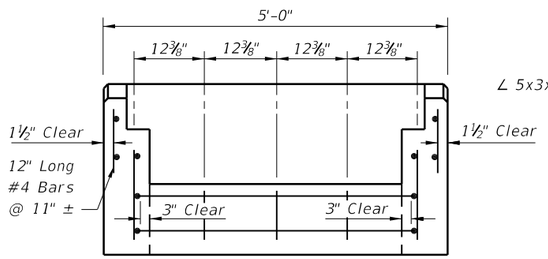

SECTION EE

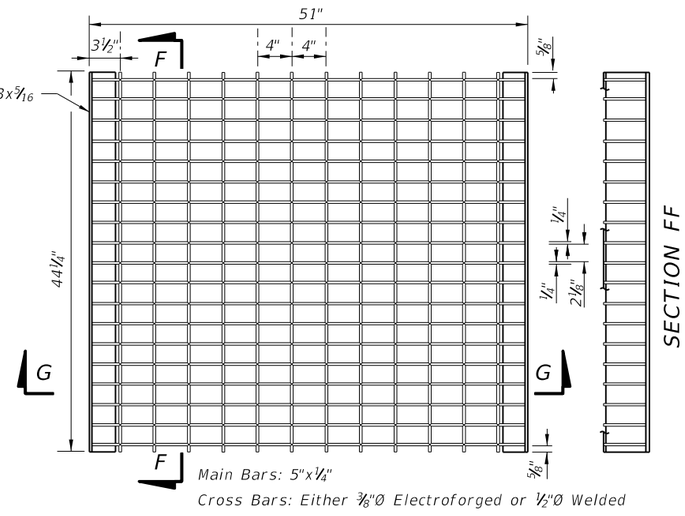

TOP VIEW

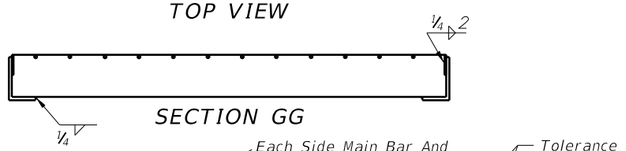

SECTION GG

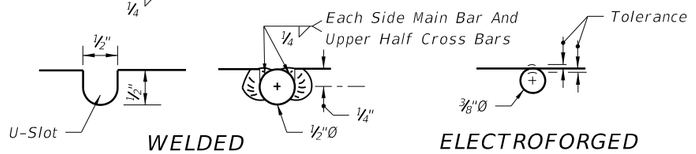

WELDED ELECTROFORGED

CROSS BAR OPTIONS

STEEL GRATE

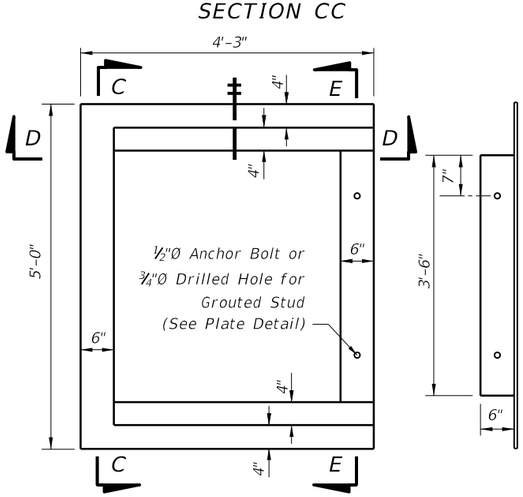

TOP VIEW OF INLET WITHOUT GRATE

TOP VIEW OF METAL PLATE

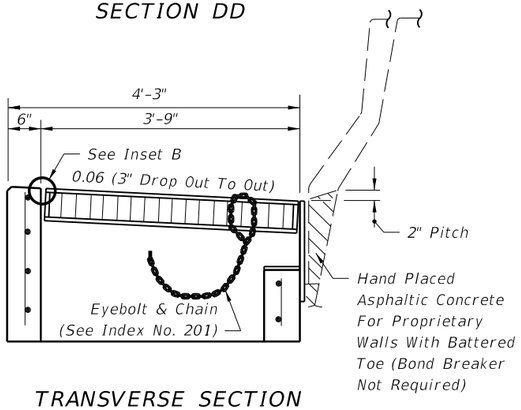

TRANSVERSE SECTION WITH GRATE & PLATE

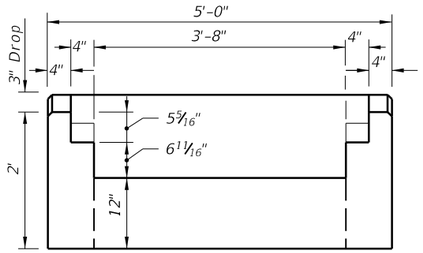

BACK VIEW WITHOUT BACK PLATE

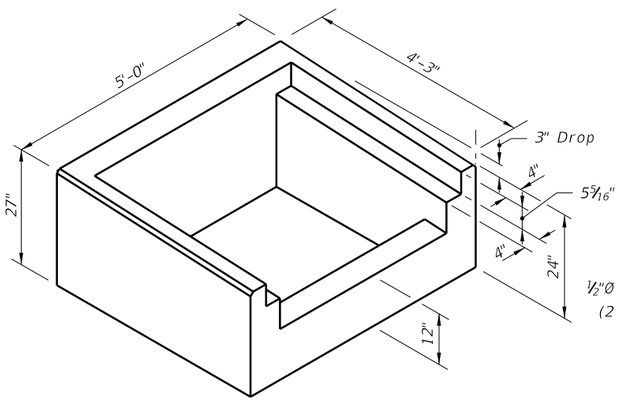

PICTORIAL VIEW OF INLET COLLAR

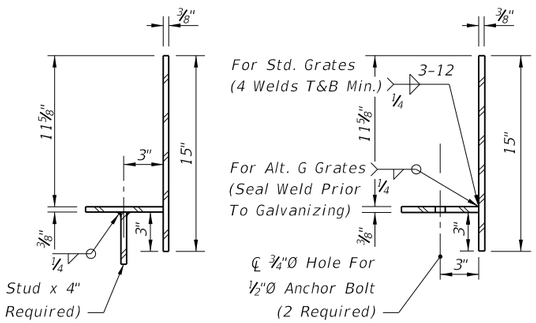

OPTION FOR GROUT STUD

OPTION FOR ANCHOR BOLT

TRANSVERSE SECTIONS THRU BACKWALL PLATE

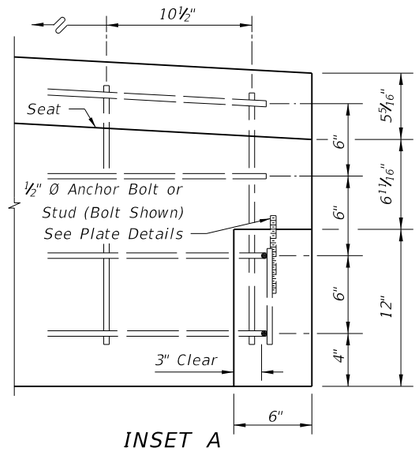

INSET A

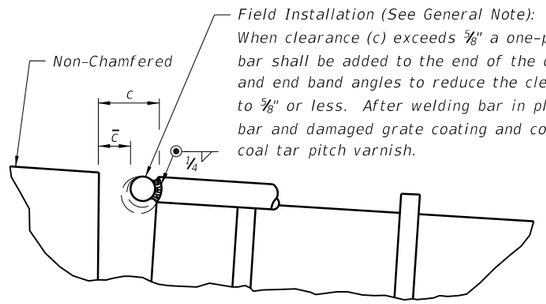

INSET B

NOTES

1. All bars #4.

2. Anchor bolts shall be either ASTM A307 hex head bolts cast-in-place, or ASTM A36 or F1554 (Grade 36) galvanized fully threaded rod, adhesive bonded anchors installed in accordance with Specification Section 416. Bolts or rods shall be 6" long (4" min. embedment) with one heavy hex head nut (ASTM 194 or A563) and one flat washer (ASTM F436) each. All anchor bolts, nuts and washers shall be hot-dip galvanized.

C:\d\projects\standards\roadway\00200-s\00218-02.dgn rd960rh 1:52:24 PM 6/28/2012

LAST REVISION	REVISION	DESCRIPTION:		INDEX NO.	SHEET NO.
07/07/09			FDOT DESIGN STANDARDS 2013	218	2

BARRIER WALL INLET

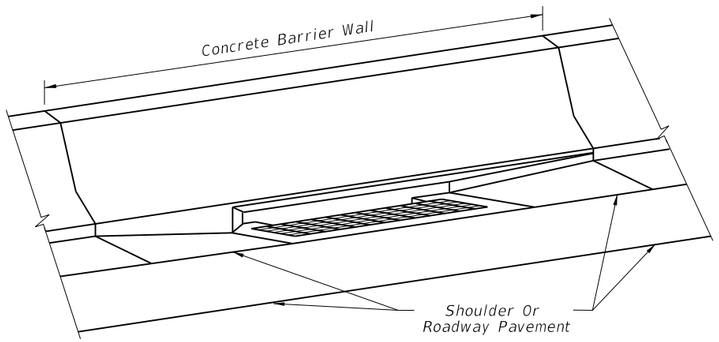

PICTORIAL VIEW

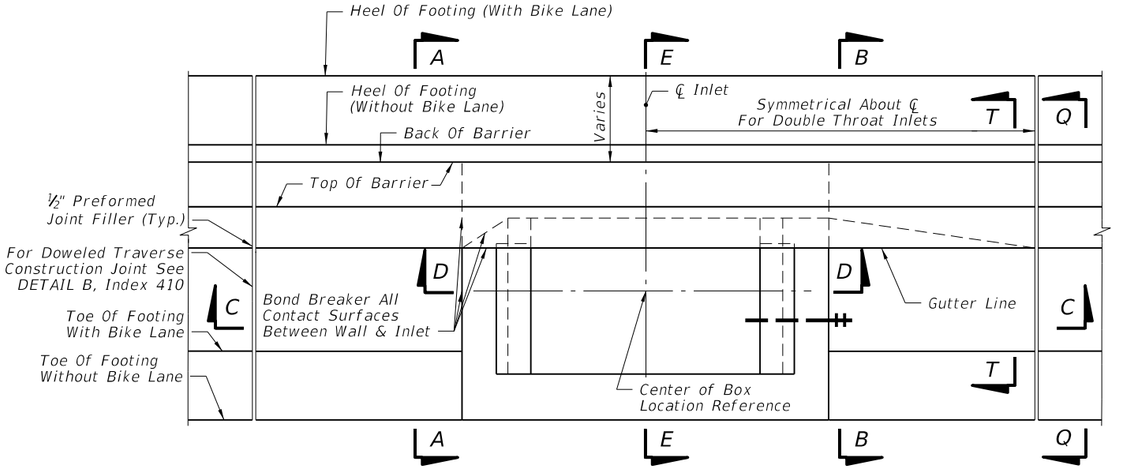

NOTE: For Sections QQ & TT, see Index 410.

PLAN VIEW

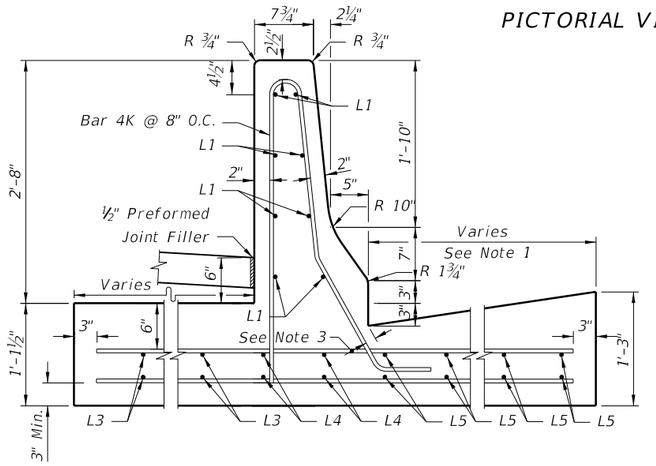

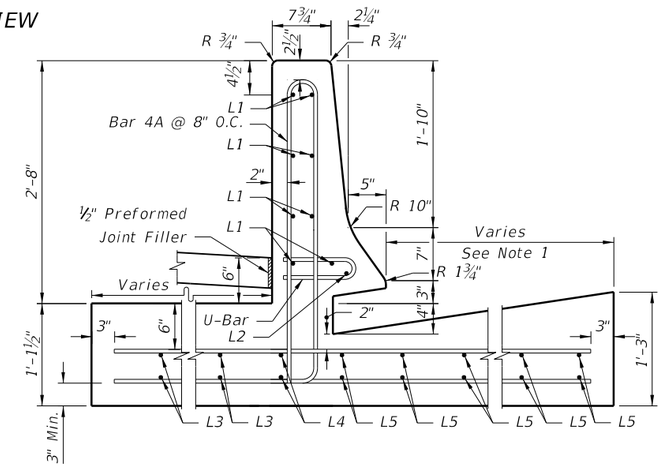

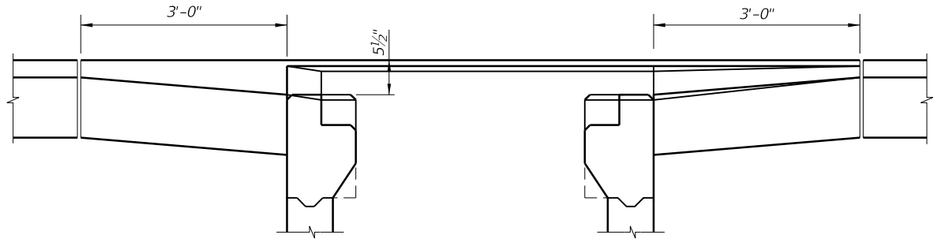

NOTES:
1. Distance = 1'-6" With Bike Lane, Or 2'-6" Without Bike Lane.
2. For Double Throat Inlet, Section BB replaces Section AA.
3. Field Bend Bar 4K To Maintain 2" Minimum Concrete Cover.

SECTION AA

SECTION BB

SECTION CC

GENERAL NOTES

1. This inlet to be used in conjunction with Concrete Barrier Wall, Curb and Gutter, Index No. 410. The inlet is suitable for bicycle and occasional pedestrian traffic with extended crossbar or bar stub (see INSETS B & B ALTERNATE). Inlet should not be placed in a pedestrian way.
2. All reinforcing is Grade 60 bars. For equivalent area of welded wire fabric for inlet, see Index No. 201. Reinforcing shall have 2" min. cover unless otherwise shown. Bars shall be trimmed or bent to provide 1½" clearance around pipe openings. Cost for additional reinforcing in barrier wall to be included in cost of concrete barrier wall.
3. Barrier wall shall be Class II Concrete, finished surface in accordance with General Note 1, Sheet 1, Index No. 410.
4. All exposed edges and corners shall be 3/4" chamfer or tooled to 1/4" radius.
5. A flat 18"x2½" drainage slot shall be constructed at the inlet centerline when the inlet is located in a curb sag. For drainage slot construction, no more than two bars shall be trimmed or deleted such as type: 4A, 4K, and U-Bar. On each side of drainage slots, vertical & horizontal bars shall be placed to provide 2" concrete cover.
6. Recommended maximum pipe sizes are 18" longitudinal and 30" transverse. For larger pipe, use Alternate B bottoms, Index No. 200.
7. Grates can be fabricated with reticuline bars or with either 1/2"∅ welded or 3/8"∅ electroforged cross bars and bearing bars as detailed on Sheet 3.
8. When Alternate G grate is specified in plans, the grate is to be hot-dip galvanized after fabrication according to Specification 962-9.
9. For Pay Item purposes, the depth of the barrier wall inlet shall be computed using the center of box grate elevation, less the flow line elevation of the lowest pipe flow line or to the top of the sump floor elevation.
10. All dimensions are for both precast and C-I-P inlets unless otherwise noted.
11. Inlets to be paid for under the contract unit price for Inlets, Barrier Wall, Rigid, Curb & Gutter, Each.
12. Concrete Barrier Wall to be paid for under the contract unit price for Shoulder Concrete Barrier Wall, Rigid-Curb & Gutter, LF.

C:\d\projects\standards\roadway\00200-s\00219-01.dgn
rd960rh
1:52:26 PM
6/28/2012

LAST REVISION	REVISION	DESCRIPTION:				
01/01/12			FDOT DESIGN STANDARDS 2013	CONCRETE BARRIER WALL INLET	INDEX NO. 219	SHEET NO. 1

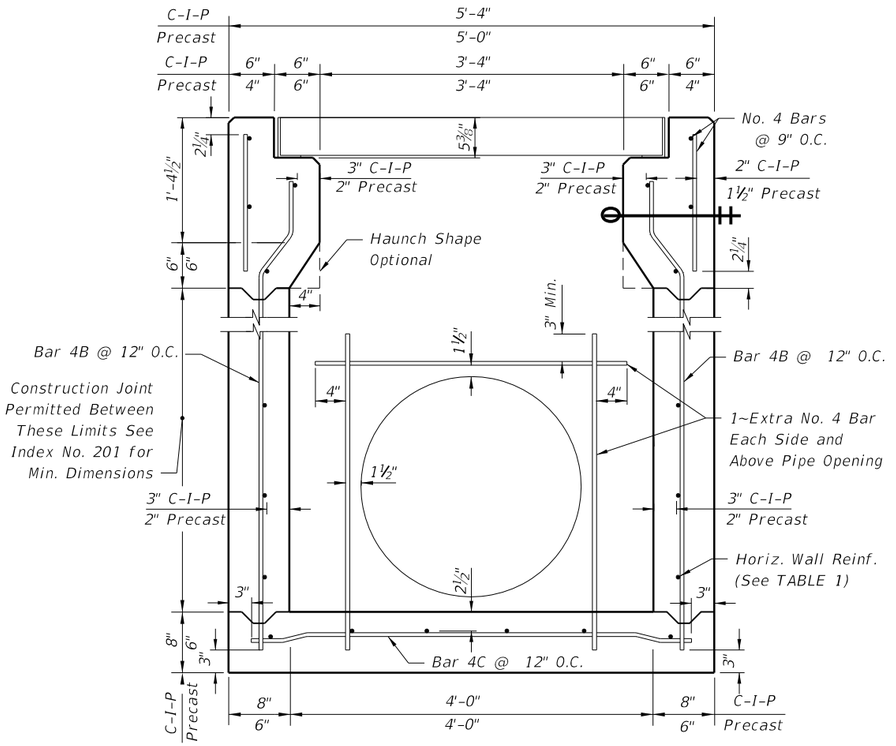

(18" Dia. Pipe Opening Shown)

SECTION DD

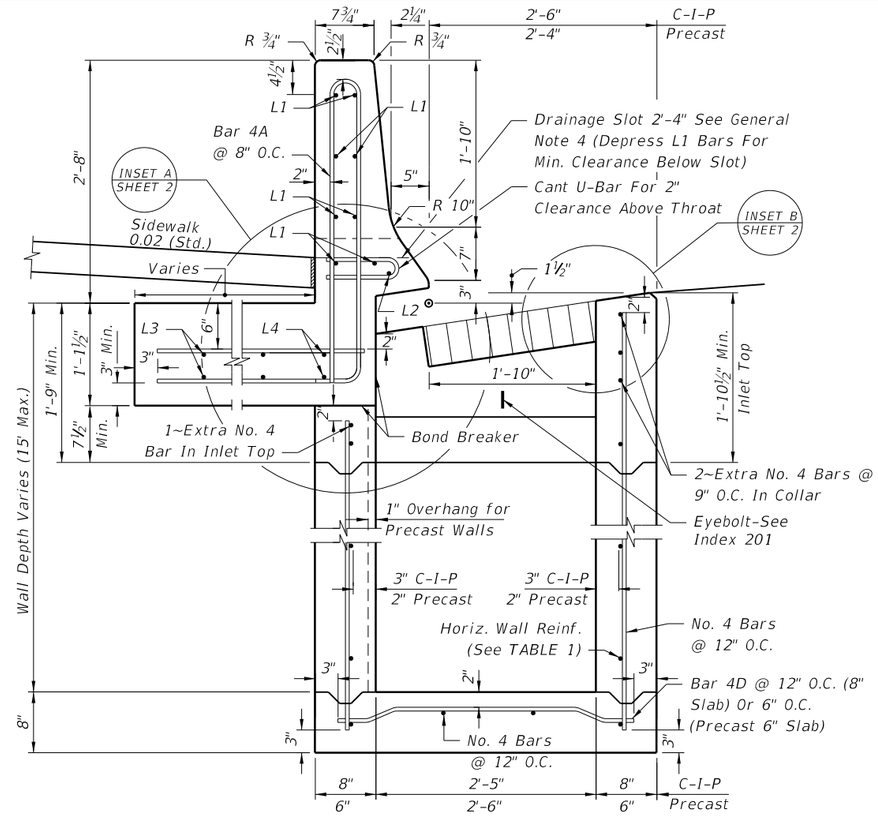

(Pipe Opening Not Shown)

SECTION EE

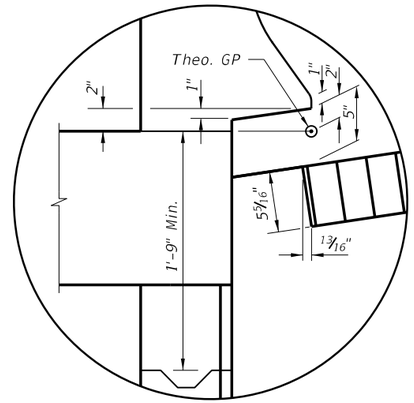

INSET A

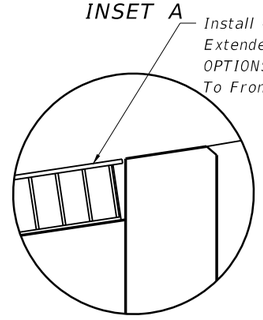

INSET B

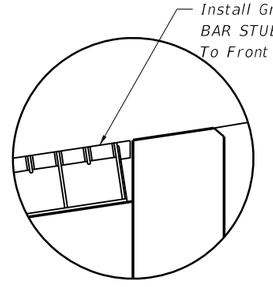

INSET B (ALTERNATE)

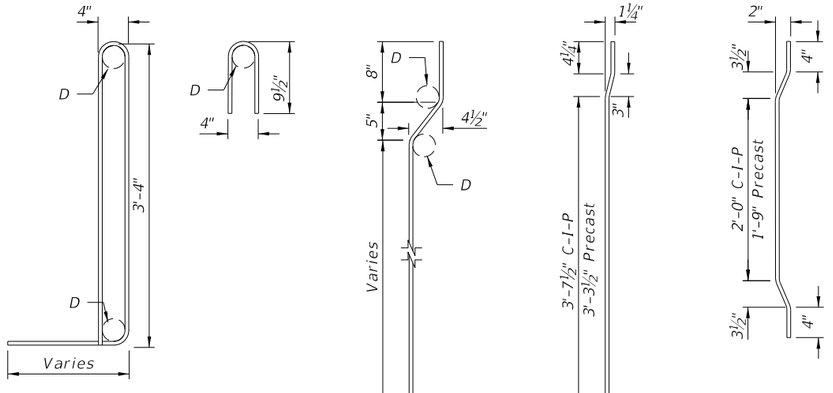

BAR 4A U-BAR BAR 4B BAR 4C BAR 4D

BAR BENDING DIAGRAMS

REINFORCING NOTES:

1. Bars L1: Length 11'-1", Straight @ 8" O.C.
2. Bars L2: Length: 8'-4" (Single Throat) 11'-0" (Double Throat) @ 8" O.C.
3. Bars L3 & L4: Length 11'-1" Field Bend For 4" Drop (Top Bars) 3" Drop (Bottom Bars) @ 8" O.C.
4. Bars L5: Length 2'-8" Field Bend For Drop Same As L3 & L4 @ 8" O.C.
5. U Bars @ 8" O.C.

WALL DEPTH		SCHEDULE	AREA (in.²/ft.)	MAX. SPACING	
C-I-P	PRECAST			BARS	WWR
0'-4'	0'-3'	A12	0.20	12"	8"
4'-9'	3'-6'	A6	0.20	6"	5"
9'-15'	6'-10'	B5.5	0.24	5½"	5"
	10'-15'	C6.5	0.37	6½"	6"

HORIZONTAL WALL REINFORCING SCHEDULE (TABLE 1)

NOTES:

1. For DOWELED TRANSVERSE CONSTRUCTION JOINT WHEN ABUTTING SEGMENT(S) LESS THAN 40' IN LENGTH, see DETAIL B, Index 410.
2. For Additional Information on "STANDARD BAR BENDING DETAILS," See Index 21300.

C:\d\projects\standards\roadway\00200-s\00219-02.dgn rd960rh 1:52:29 PM 6/28/2012

LAST REVISION	REVISION	DESCRIPTION:				
01/01/12			FDOT DESIGN STANDARDS 2013	CONCRETE BARRIER WALL INLET	INDEX NO. 219	SHEET NO. 2

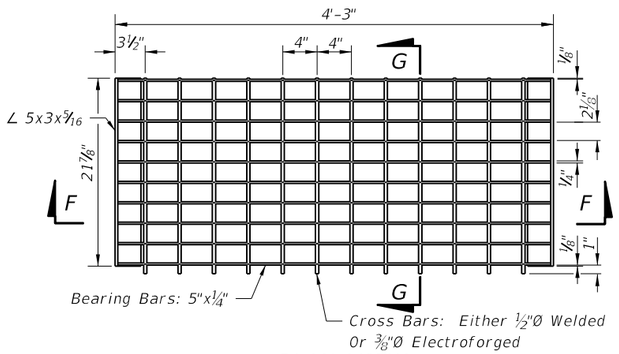

PLAN VIEW

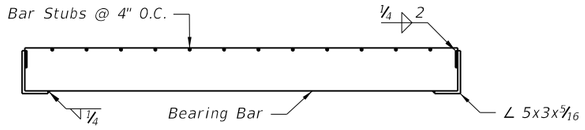

SECTION FF

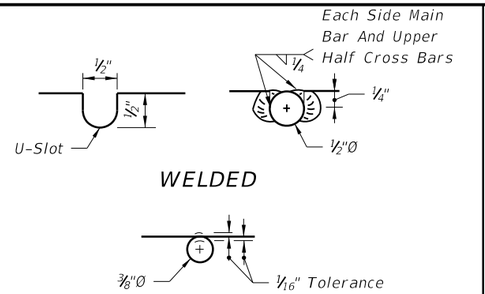

CROSS BAR OPTIONS

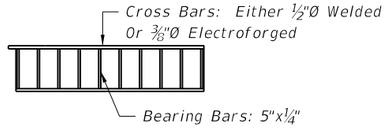

SECTION GG

CROSS BAR GRATE

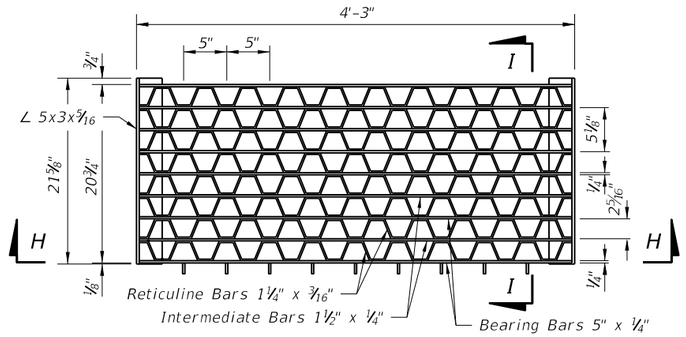

PLAN VIEW

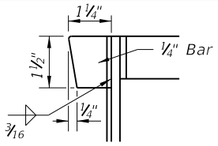

BAR STUB

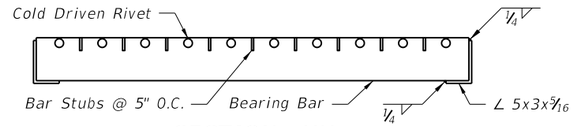

SECTION HH

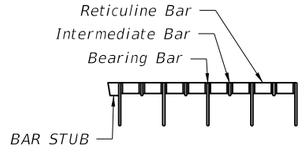

SECTION II

RETICULINE GRATE

OPTIONAL STEEL GRATES

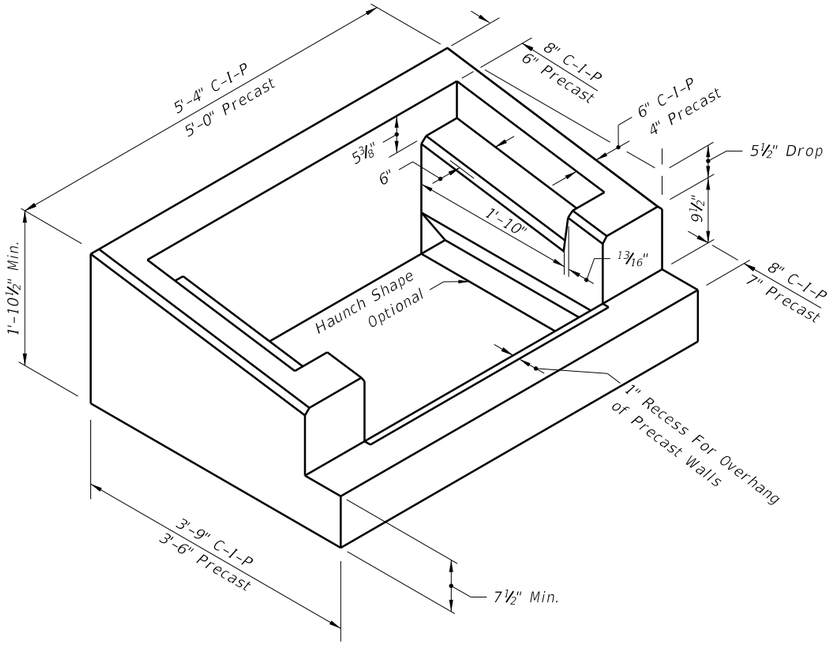

PICTORIAL VIEW OF INLET TOP

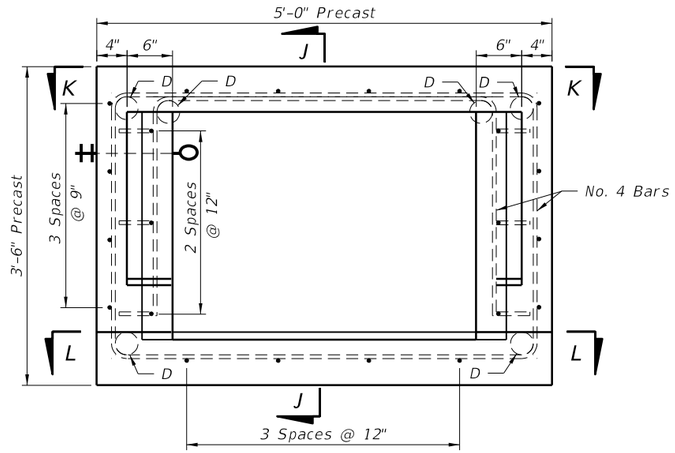

TOP VIEW OF INLET TOP WITHOUT GRATE

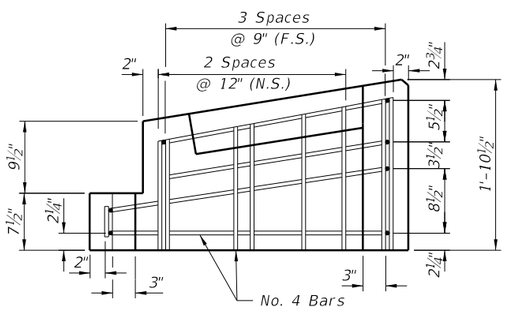

SECTION JJ

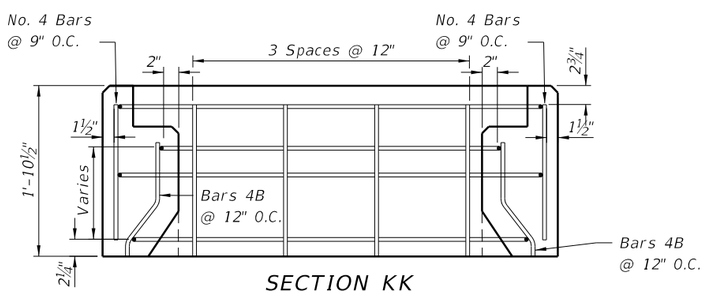

SECTION KK

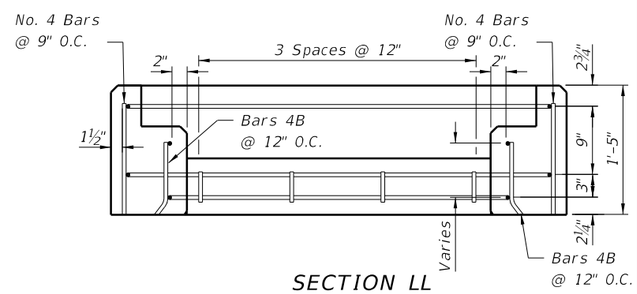

SECTION LL

NOTE:
1. For additional information on Bar 4B, see BAR BENDING DIAGRAMS (Sheet 2).
2. C-I-P Inlet Top Reinforcing Similar

PRECAST INLET TOP REINFORCING DETAILS

C:\d\projects\standards\roadway\00200-s\00219-03.dgn
rd960rh
1:52:32 PM
6/28/2012

LAST REVISION	REVISION	DESCRIPTION:				
01/01/12			FDOT DESIGN STANDARDS 2013	CONCRETE BARRIER WALL INLET	INDEX NO. 219	SHEET NO. 3

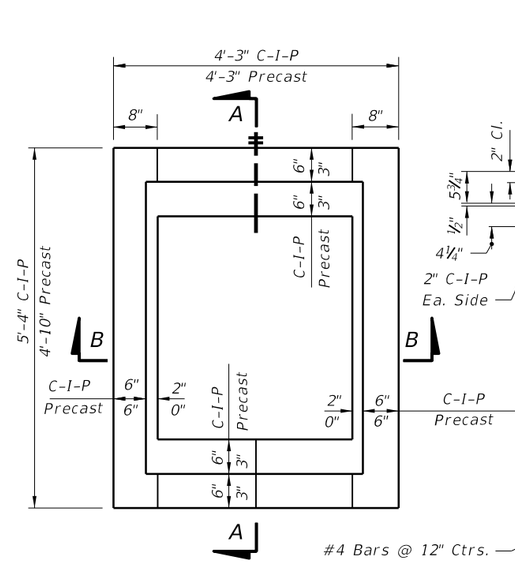

PLAN
(CAST-IN-PLACE INLET WITHOUT GRATE SHOWN, PRECAST INLET SIMILAR)

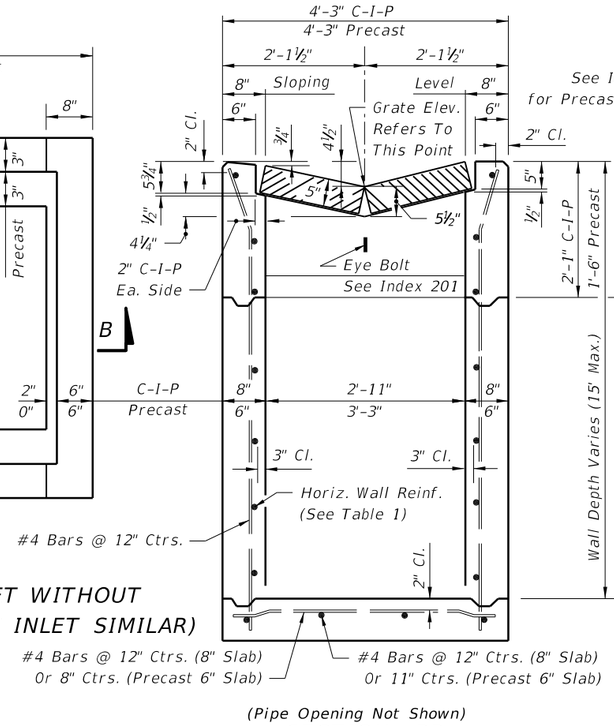

(Pipe Opening Not Shown)
SECTION BB

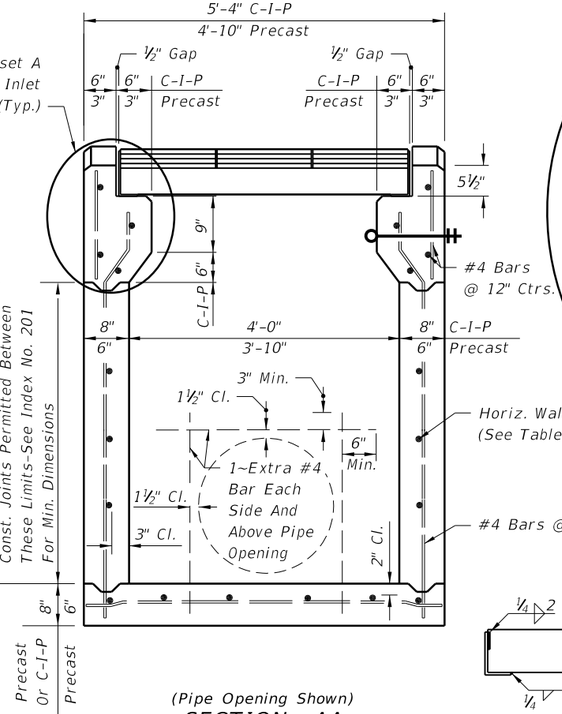

(Pipe Opening Shown)
SECTION AA

(CAST-IN-PLACE INLET SHOWN, PRECAST INLET SIMILAR)

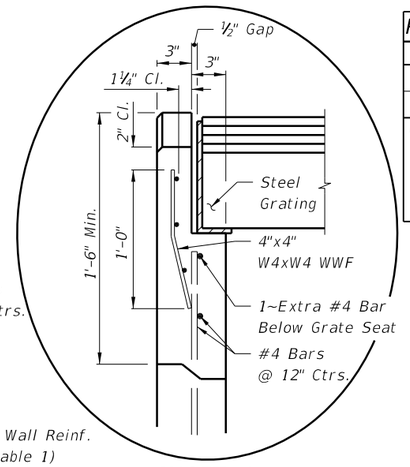

INSET A
(PRECAST OPTION)

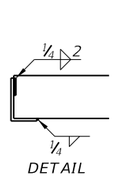

DETAIL

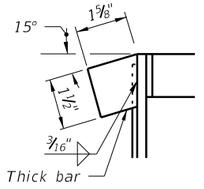

DETAIL OF BAR STUB

RECOMMENDED MAXIMUM PIPE SIZES	
INLET INSIDE WIDTH	PIPE SIZE
2'-11" or 3'-3"	24"
4'-0" or 3'-10"	30"

Note: Recommended sizes are for concrete pipe. Sizes for other types of pipe must be verified for fit in accordance with Index No. 201. For larger pipe see bottom detail below and Index No. 200.

HORIZONTAL WALL REINFORCING SCHEDULE (TABLE 1)

WALL DEPTH	SCHEDULE	AREA (in²/ft)	MAX. SPACING	
			BARS	WWF
0'-5'	A12	0.20	12"	8"
5'-9'	A6	0.20	6"	5"
9'-12'	A4	0.20	4"	3"
9'-15'	B5.5	0.24	5½"	5"

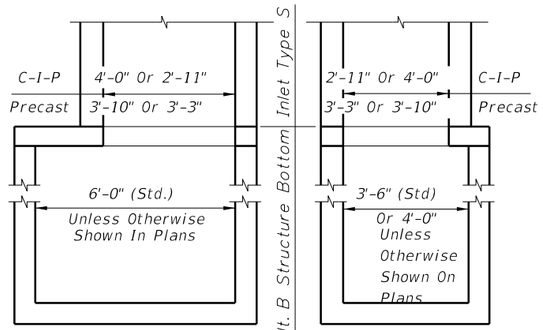

NOTE: Alt. B Structure Bottom Only. See Index No. 200 for structure bottom details and hole reinforcement.

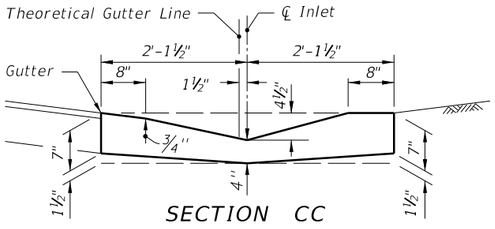

SECTION CC

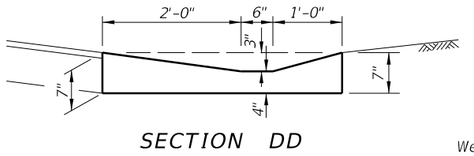

SECTION DD

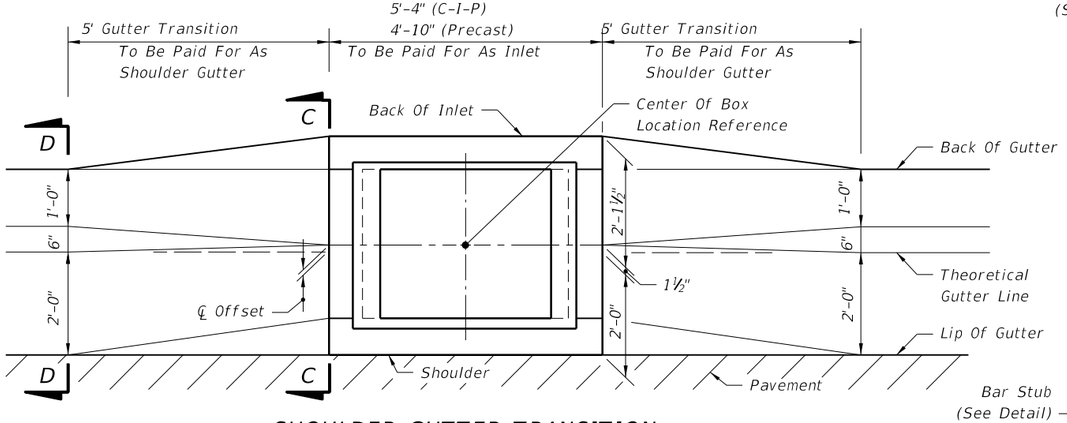

SHOULDER GUTTER TRANSITION

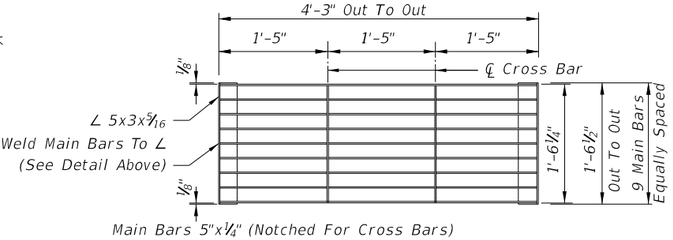

Main Bars 5"x¼" (Notched For Cross Bars)
Cross Bars 1¾"x¼" (3/16" Continuous Weld At Main Bar Notches)
Main Bars and Cross Bars Flush On Top

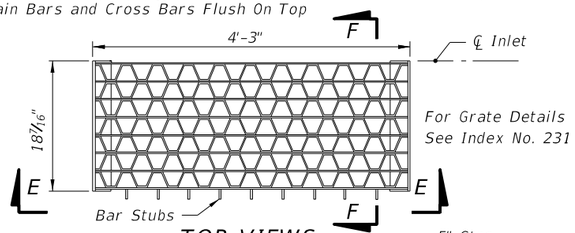

TOP VIEWS

SECTION FF

SECTION EE

STEEL GRATE

INLET WITH STRUCTURE BOTTOM

GENERAL NOTES

1. This inlet is intended for use in shoulder gutter on facilities subject to heavy wheel loads. The parallel bar grate shall be used on limited access facilities. On other facilities the reticuline grate shall be used. Locate inlet outside of pedestrian way.
2. All reinforcing is Grade 60 bars with 2" min. cover unless otherwise noted. See Index No. 201 for equivalent area of welded wire fabric. Bars to be cut or bent for 1½" minimum clearance around pipe.
3. All exposed edges and corners shall be ¾" chamfer or tooled to ¼" radius.
4. When Alternate G grate is specified in plans, the grate is to be hot-dip galvanized after fabrication.
5. For supplementary details and notes see Index Nos. 200 and 201.
6. All dimensions are for both precast and cast-in-place inlets unless otherwise noted.
7. Inlets to be paid for under the contract unit price for inlets (Gutter Type S), EA. Cost of concrete apron at terminal inlets to be included in the cost of the inlet.

C:\d*projects\standards\roadway\00200-s\00220-01.dgn rd960rh 1:52:34 PM 6/28/2012

LAST REVISION	REVISION	DESCRIPTION:				
07/01/10			FDOT DESIGN STANDARDS 2013	GUTTER INLET TYPE S	INDEX NO. 220	SHEET NO. 1

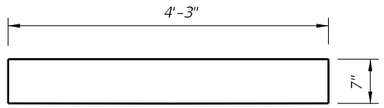

SECTION BB
(Enlarged)

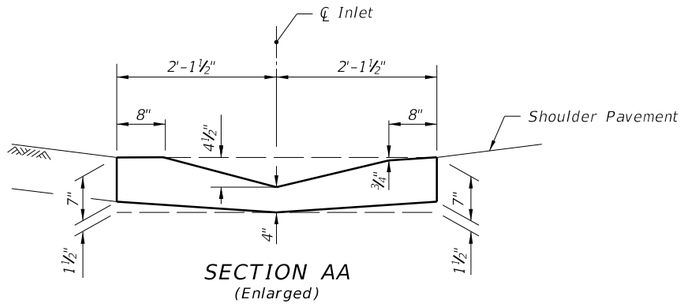

SECTION AA
(Enlarged)

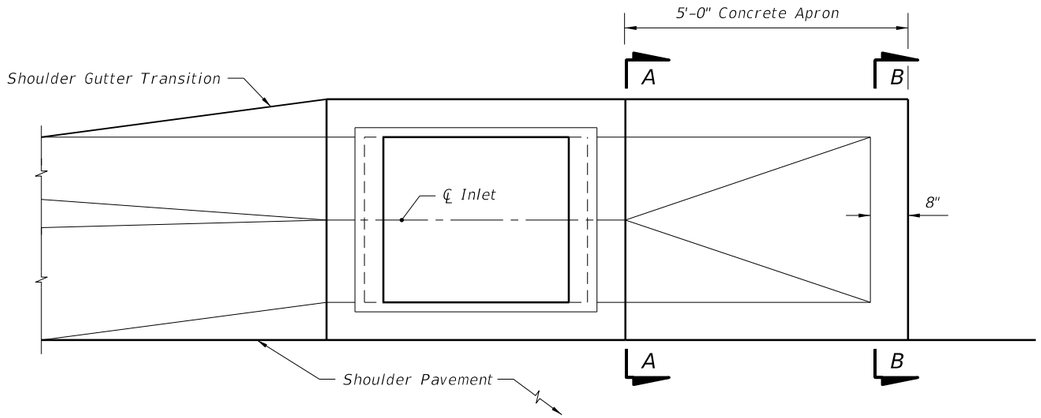

Top View

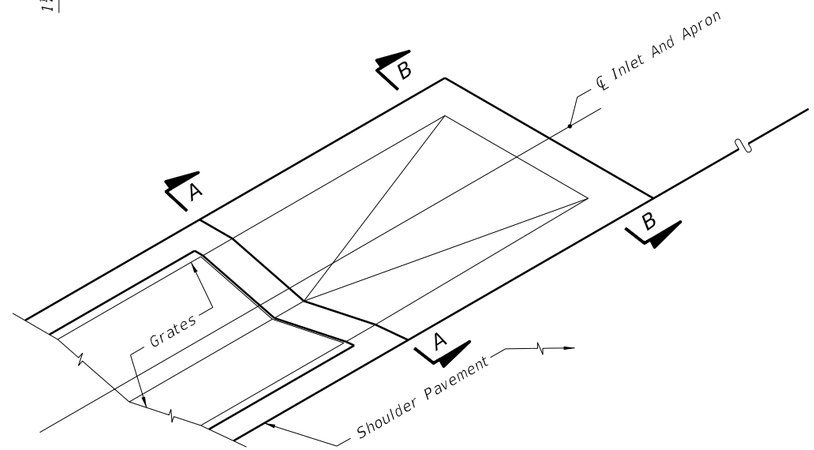

PICTORIAL VIEW

Apron To be Constructed At The Most Downstream Inlet In A Run Of Shoulder Gutter

CONCRETE APRON AT TERMINAL INLETS

6/28/2012 1:52:37 PM rd960rh C:\d\projects\standards\roadway\00200-s\00220-02.dgn

LAST REVISION	REVISION	DESCRIPTION:		FDOT DESIGN STANDARDS 2013	GUTTER INLET TYPE S	INDEX NO.	SHEET NO.
07/01/07			STATE OF FLORIDA DEPARTMENT OF TRANSPORTATION			220	2

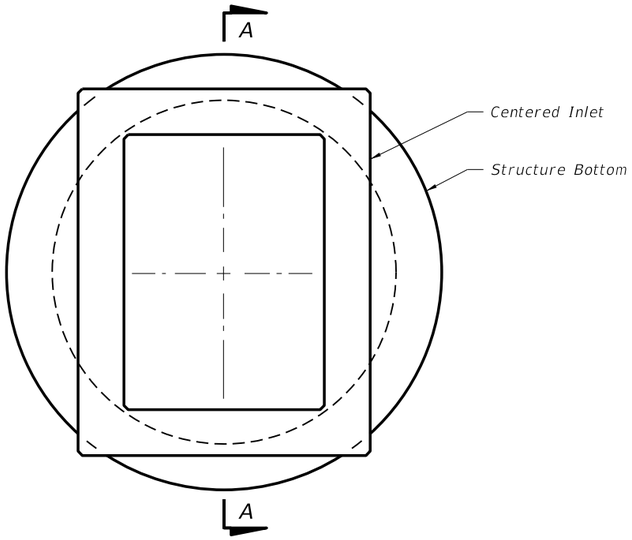

TOP VIEW

TOP SLAB OPENINGS		
DIAMETER	OPENING SIZE	
	MIN.	MAX.
5'-0" To 8'-0"	2'-11" x 4'-0"	3'-3" x 3'-10"

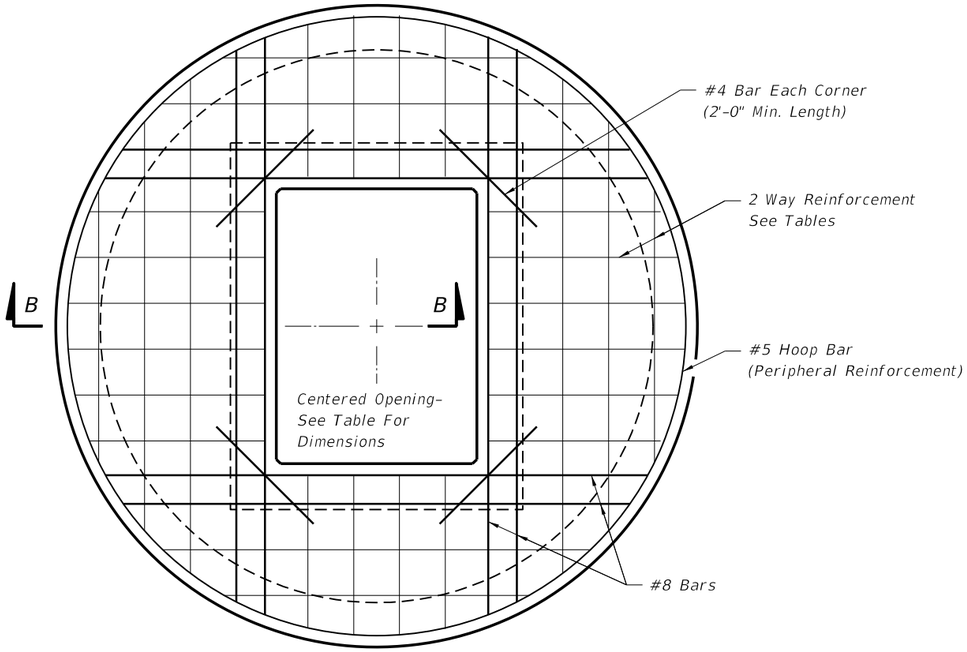

TOP SLAB REINFORCING DIAGRAM

TOP SLAB REINFORCING SCHEDULE	
SCHEDULE	GRADE 60 (BAR) OR 65 KSI & 70 KSI (WIRE FABRIC) $In^2/ft.$
A	0.20
B	0.24
C	0.37
D	0.53
E	0.73
F	1.06
G	1.45

TOP SLAB WITH CENTERED OPENING		
SLAB DEPTH	SLAB THICKNESS	REINFORCING (2 WAYS) SCHEDULE
SIZE: 5'-0"		
≥0.5'<30'	9½"	C
30'-40'	9½"	D
SIZE: 6'-0"		
≥0.5'<8'	9½"	B
8'<18'	9½"	C
18'<30'	9½"	D
30'<37'	9½"	E
37'-40'	9½"	G
SIZE: 8'-0"		
≥0.5'<9'	11½"	C
9'<15'	11½"	D
15'<23'	11½"	E
23'<33'	11½"	E
33'-40'	11½"	G

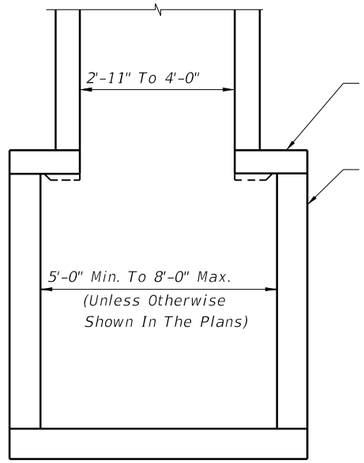

SECTION AA

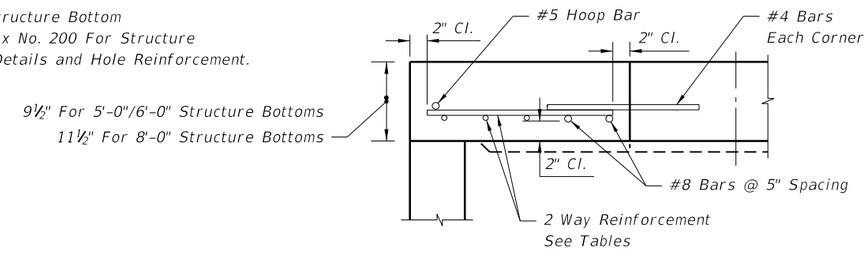

SECTION BB

ALT. A STRUCTURE BOTTOM FOR INLET TYPE S

6/28/2012 1:52:39 PM rd960rh C:\d\projects\standards\roadway\00200-s\00220-03.dgn

LAST REVISION	REVISION	DESCRIPTION:				
07/01/05			FDOT DESIGN STANDARDS 2013	GUTTER INLET TYPE S	INDEX NO. 220	SHEET NO. 3

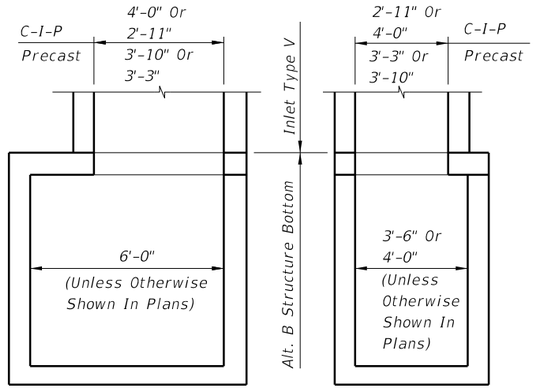

NOTE: Alt. B Structure Bottom Only. See Index No. 200 for structure bottom details and hole reinforcement.

(For Pipes 30" Dia. And Larger)

INLET WITH STRUCTURE BOTTOM

RECOMMENDED MAXIMUM PIPE SIZES	
Inlet Inside Width	Pipe Size
2'-11" Or 3'-3"	24"
4'-0" Or 3'-10"	30"
Note: Recommended sizes are for concrete pipe. Sizes for other types of pipe must be verified for fit in accordance with Index No. 201. For larger pipe see bottom detail above and Index No. 200.	

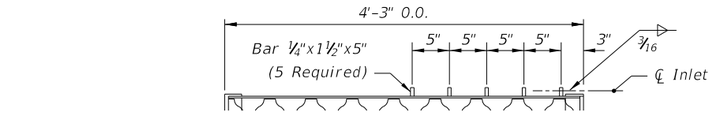

OPTIONAL BAR SPACING

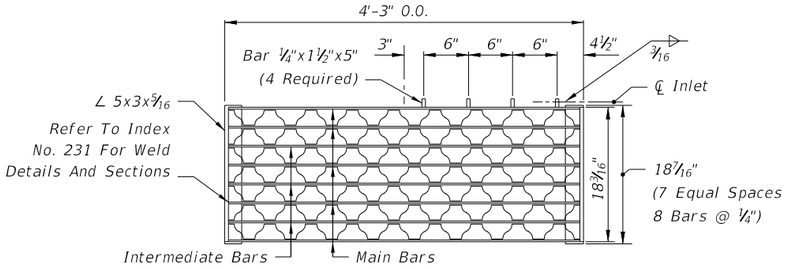

TWO REQUIRED PER INLET

5" Steel Grate: Main Bars 5"x1/4"
Intermediate Bars 1 1/2"x1/4"
Reticuline Bars 1 1/4"x3/16"

Steel Grate : Manufactured By Borden, Florida Steel, U.S. Foundry Irving, Reliance, Greulich (Or Equal).

STEEL GRATE

GENERAL NOTES

1. This inlet is suitable for village swales, ditches, or other areas subject to heavy wheel loads, minimum debris. This inlet may be placed in areas subject to occasional pedestrian traffic such as landscaped areas and pavement areas where pedestrians can walk around the inlet. This inlet is not for use in a bicycle way.
2. When alternate "G" grate is specified in plans, the grate is to be hot dip galvanized after fabrication.
3. All reinforcing is Grade 60 bars with 2" min. cover unless otherwise noted. See Index No. 201 for equivalent area of welded wire fabric. Cut or bend bars out of way of pipe to clear pipe 1 1/2".
4. All exposed edges and corners shall be 3/4" chamfer or tooled to 1/4" radius.
5. All dimensions are for both precast and cast-in-place inlets unless otherwise noted.
6. For supplementary details see Index No. 201.
7. Inlet to be paid for under the contract unit price for Inlets (Gutter Type V), EA

HORIZONTAL WALL REINFORCING SCHEDULE (TABLE 1)

WALL DEPTH	SCHEDULE	AREA (in.²/ft.)	MAX. SPACING	
			BARS	WWF
0' - 5'	A12	0.20	12"	8"
5' - 9'	A6	0.20	6"	5"
9' - 12'	A4	0.20	4"	3"
9' - 15'	B5.5	0.24	5 1/2"	5"

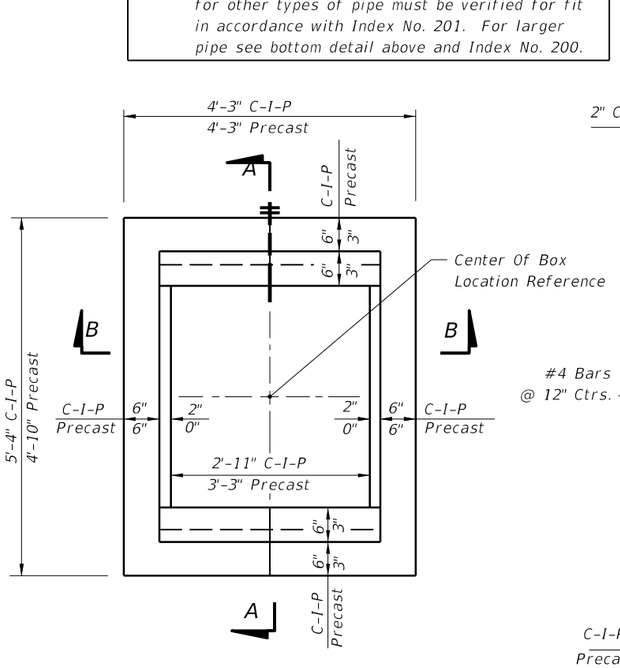

PLAN

(CAST-IN-PLACE INLET SHOWN WITHOUT GRATE; PRECAST INLET SIMILAR)

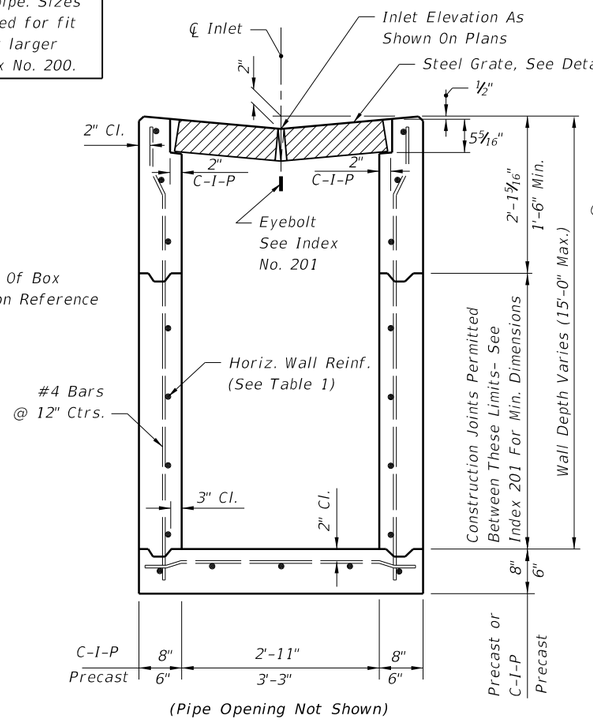

(Pipe Opening Not Shown)

SECTION BB

(CAST-IN-PLACE INLET SHOWN PRECAST INLET SIMILAR)

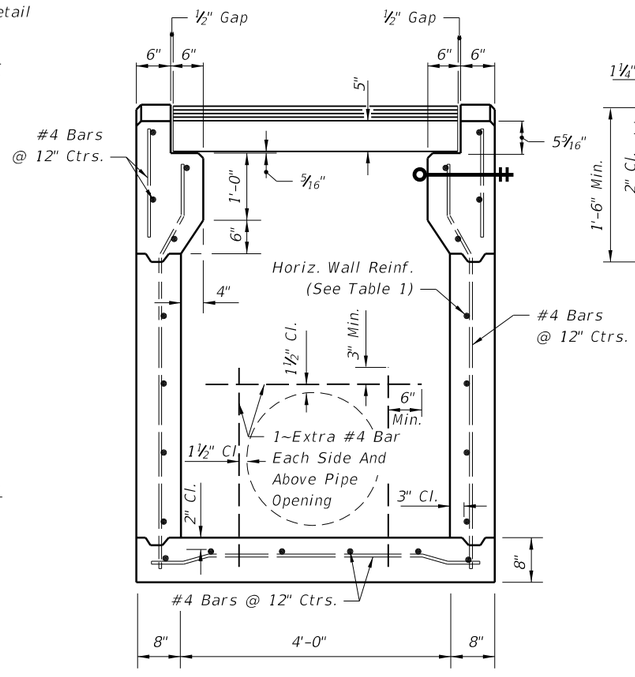

(Pipe Opening Shown)

SECTION AA

(CAST-IN-PLACE INLET)

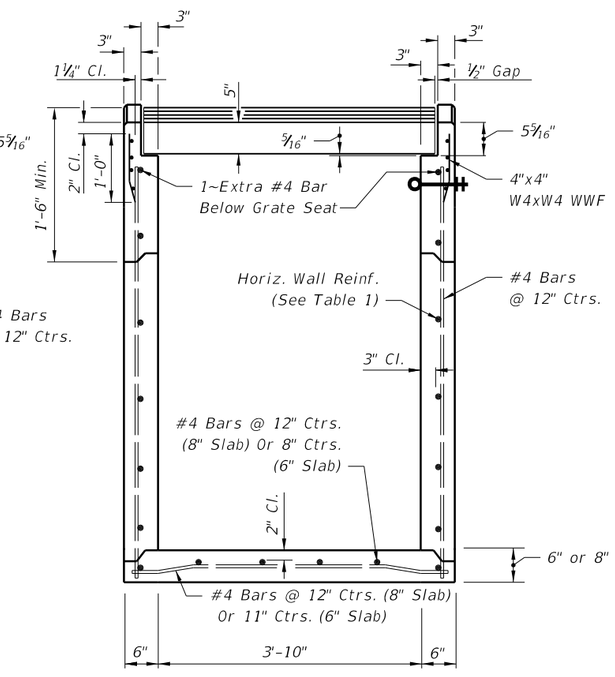

(Pipe Opening Not Shown)

SECTION AA

(PRECAST INLET)

6/28/2012 1:52:40 PM rd960rh C:\d\projects\standards\roadway\00200-s\00221-01.dgn

LAST REVISION	REVISION	DESCRIPTION:				
07/01/10			FDOT DESIGN STANDARDS 2013	GUTTER INLET TYPE V	INDEX NO. 221	SHEET NO. 1

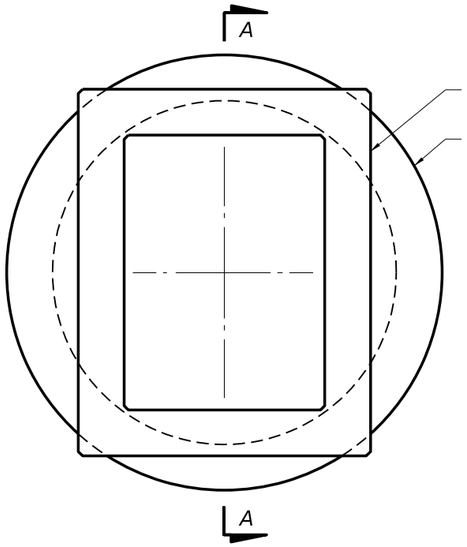

TOP SLAB OPENINGS		
DIAMETER	OPENING SIZE	
	MIN.	MAX.
5'-0" To 8'-0"	2'-11" x 4'-0"	3'-3" x 3'-10"

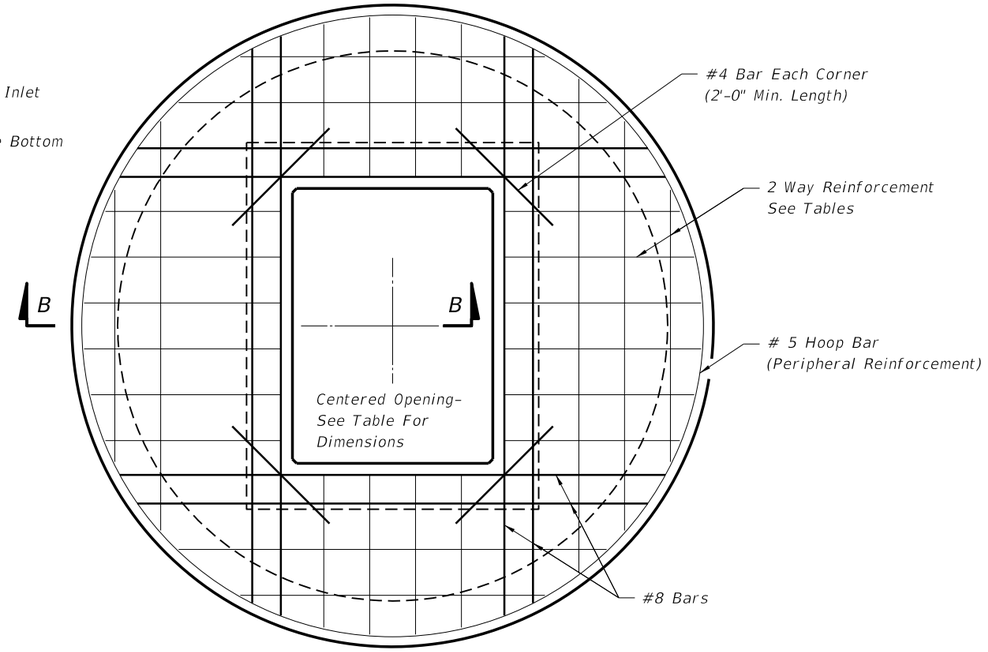

TOP SLAB REINFORCING DIAGRAM

TOP SLAB REINFORCING SCHEDULE	
SCHEDULE	GRADE 60 (BAR) OR 65 KSI & 70 KSI (WIRE FABRIC) $In.^2/ft.$
A	0.20
B	0.24
C	0.37
D	0.53
E	0.73
F	1.06
G	1.45

TOP SLAB WITH CENTERED OPENING		
SLAB DEPTH	SLAB THICKNESS	REINFORCING (2 WAYS) SCHEDULE
SIZE: 5'-0"		
≥0.5' <30'	9½"	C
30'-40'	9½"	D
SIZE: 6'-0"		
0.5' < 8'	9½"	B
8' < 18'	9½"	C
18' < 30'	9½"	D
30' < 37'	9½"	E
37'-40'	9½"	G
SIZE: 8'-0"		
≥0.5' < 9'	11½"	C
9' < 15'	11½"	D
15' < 23'	11½"	E
23' < 33'	11½"	E
33'-40'	11½"	G

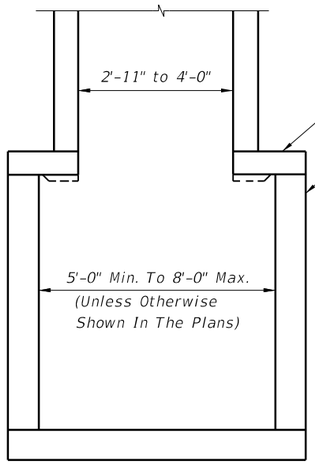

SECTION AA

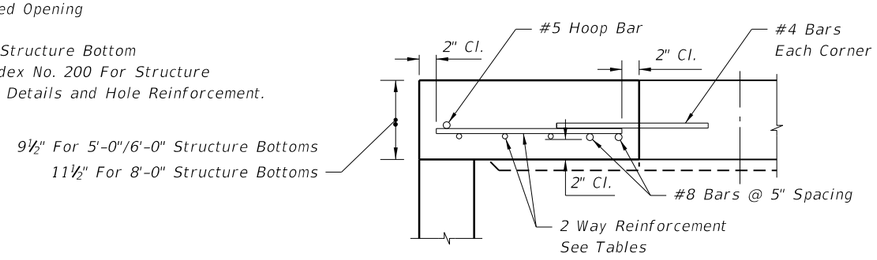

SECTION BB

ALT. A STRUCTURE BOTTOM FOR INLET TYPE V

6/28/2012 1:52:43 PM rd960rh C:\d\projects\standards\roadway\00200-s\00221-02.dgn

LAST REVISION	REVISION	DESCRIPTION:		FDOT DESIGN STANDARDS 2013	GUTTER INLET TYPE V	INDEX NO.	SHEET NO.
0701/05						221	2

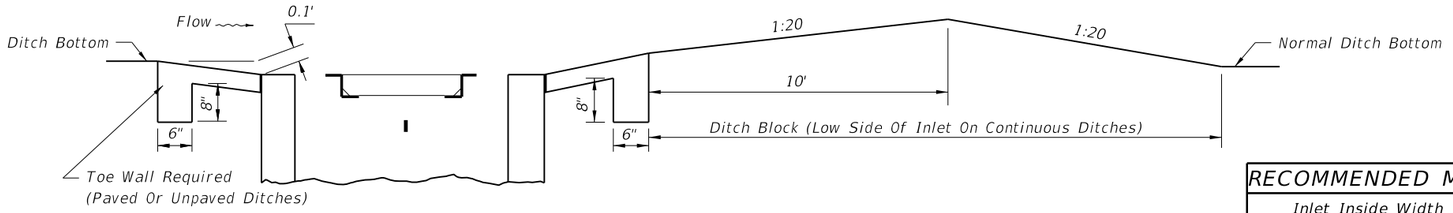

SECTION DD

RECOMMENDED MAXIMUM PIPE SIZES	
Inlet Inside Width	Pipe Size
2'-0"	18"
3'-1"	24" 18" Where An 18" pipe Enters A 2'-0" Wall
Note: Recommended sizes are for concrete pipe. Sizes for other types of pipe must be verified for fit in accordance with Index No. 201. For larger pipe see bottom detail right and Index No. 200.	

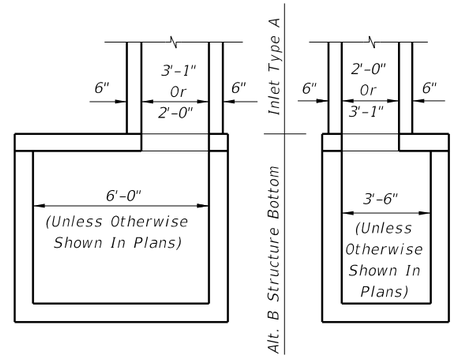

NOTE: Alt. B Structure Bottom Only. See Index No. 200 for Structure Bottom Details And Hole Reinforcement.

INLET WITH STRUCTURE BOTTOM

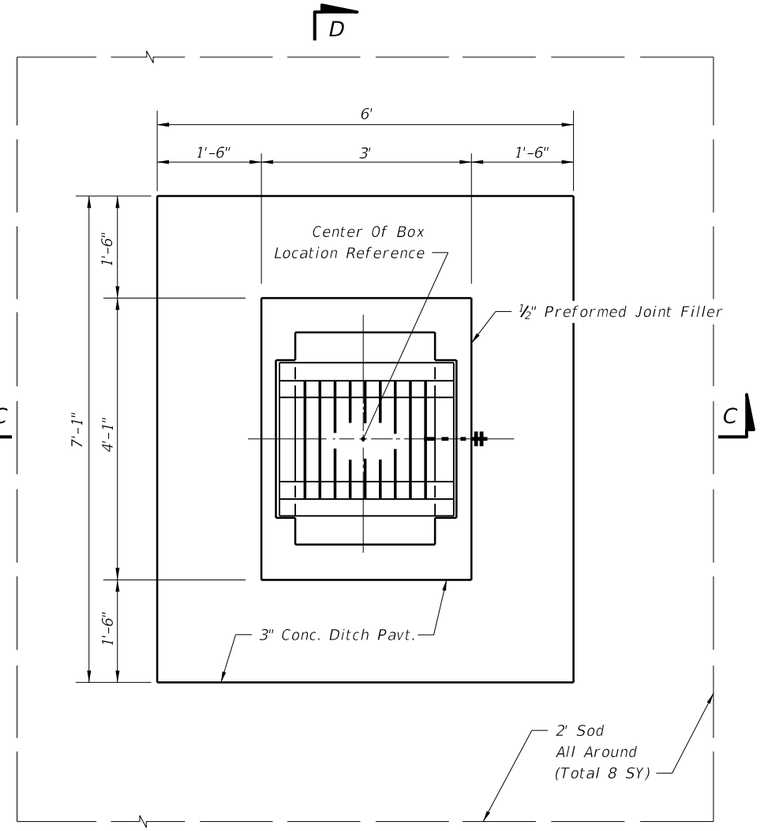

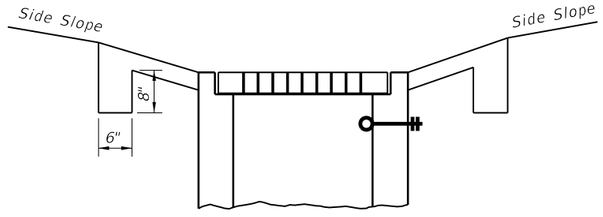

SECTION CC

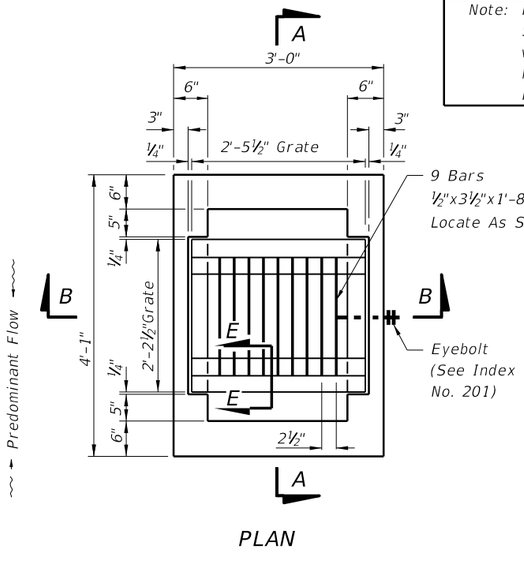

PLAN

SECTION EE

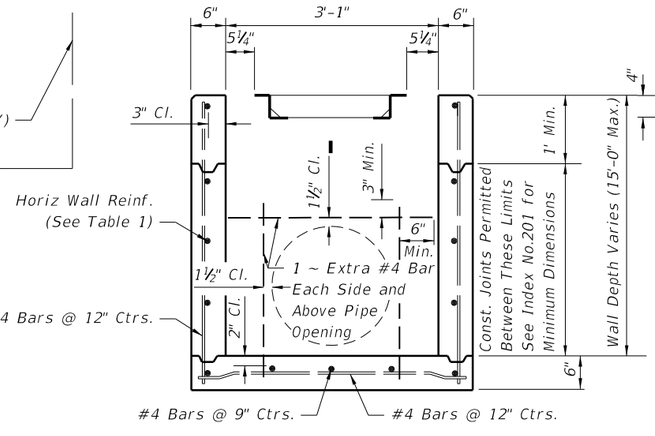

(Pipe Opening Shown)
SECTION AA

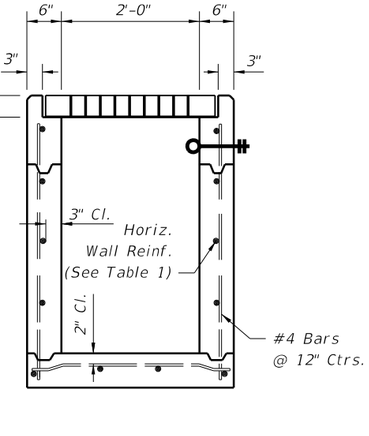

(Pipe Opening Not Shown)
SECTION BB

GENERAL NOTES

1. This inlet is designed for ditches, medians, or other area subject to heavy wheel loads on limited access facilities where debris may be a problem. This inlet is not for use in areas subject to pedestrian and/or bicycle traffic.
2. All reinforcing is Grade 60 bars with 2" min. cover unless otherwise noted. Cut or bend bars out of way of pipe to clear pipe by 1½". See Index 201 for equivalent area of welded wire fabric.
3. All exposed edges and corners shall be ¾" chamfer or tooled to ¼" radius.
4. When alternate "G" grate is specified in plans, the grate is to be hot-dip galvanized after fabrication.
5. Cost of ditch paving to be included in the cost of Inlet. Sodding to be paid for under contract unit price for Performance Turf, SY.
6. For supplemental details see Index No. 201.
7. All dimensions are for both precast and cast-in-place inlets unless otherwise noted.
8. Inlet to be paid for under the contract unit price for inlets (Dt Bot Type A), EA.

HORIZONTAL WALL REINFORCING SCHEDULE (TABLE 1)

WALL DEPTH	SCHEDULE	AREA (in.²/ft.)	MAX. SPACING	
			BARS	WWF
0' - 10'	A12	0.20	12"	8"
10' - 15'	A6	0.20	6"	5"

C:\d\projects\standards\roadway\00200-s\00230-01.dgn
rd960rh
1:52:45 PM
6/28/2012

LAST REVISION	REVISION	DESCRIPTION:			INDEX NO.	SHEET NO.
07/01/09			FDOT DESIGN STANDARDS 2013	DITCH BOTTOM INLET TYPE A	230	1

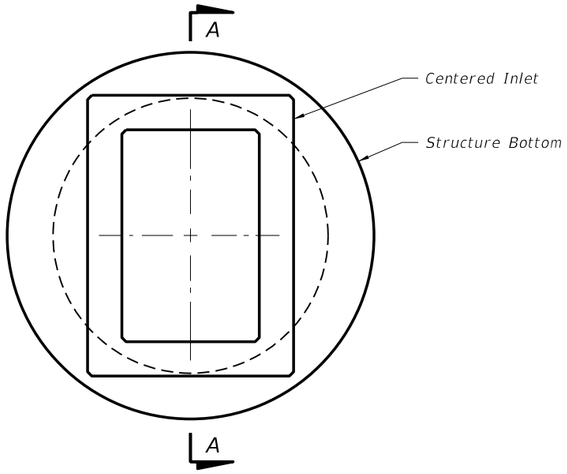

TOP VIEW

TOP SLAB OPENINGS	
DIAMETER	OPENING SIZE
	MIN.
4'-0" To 8'-0"	2'-0" x 3'-1"

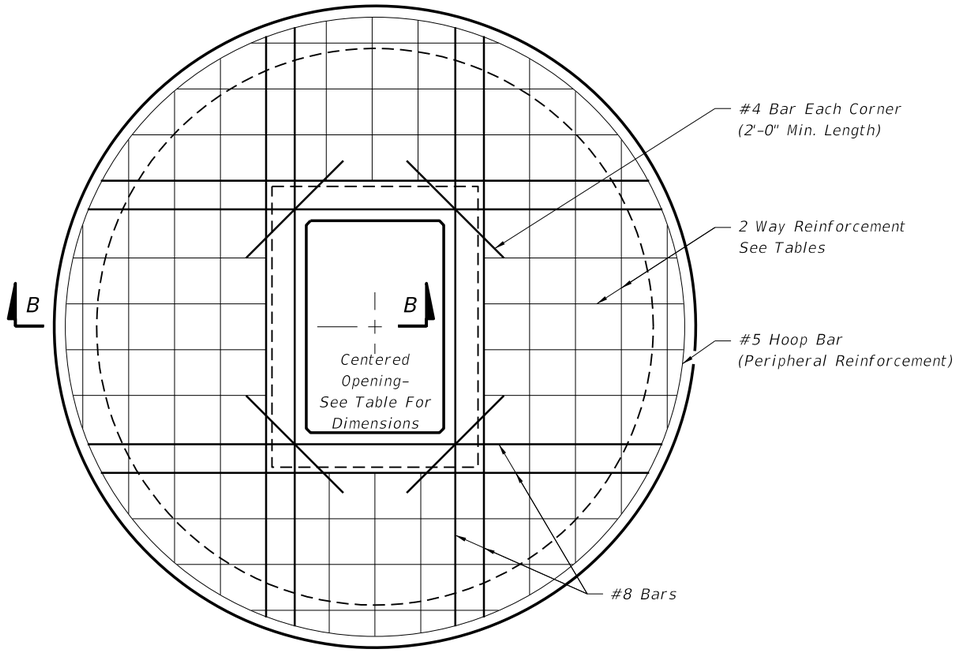

TOP SLAB REINFORCING DIAGRAM

TOP SLAB REINFORCING SCHEDULE	
SCHEDULE	GRADE 60 (BAR) OR 65 KSI & 70 KSI (WIRE FABRIC) $In.^2/ft.$
A	0.20
B	0.24
C	0.37
D	0.53
E	0.73
F	1.06
G	1.45

TOP SLAB WITH CENTERED OPENING		
SLAB DEPTH	SLAB THICKNESS	REINFORCING (2 WAYS) SCHEDULE
SIZE: 4'-0"		
≥0.5'-40'	9½"	C
SIZE: 5'-0"		
≥0.5'<30'	9½"	C
30'-40'	9½"	D
SIZE: 6'-0"		
0.5'<8'	9½"	B
8'<18'	9½"	C
18'<30'	9½"	D
30'<37'	9½"	E
37'-40'	9½"	G
SIZE: 8'-0"		
≥0.5'<9'	11½"	C
9'<15'	11½"	D
15'<23'	11½"	E
23'<33'	11½"	E
33'-40'	11½"	G

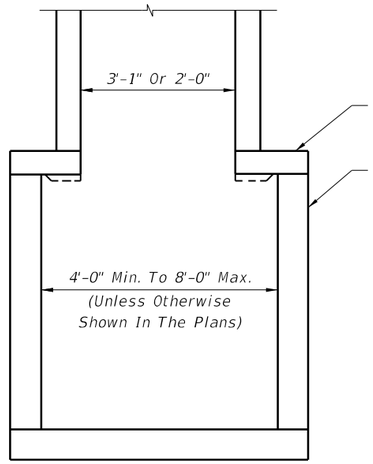

SECTION AA

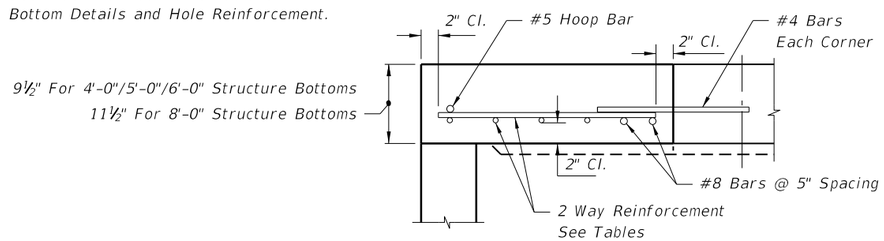

SECTION BB

ALT. A STRUCTURE BOTTOM FOR INLET TYPE A

6/28/2012 1:52:46 PM rd960rh C:\d\projects\standards\roadway\00200-s\00230-02.dgn

LAST REVISION	REVISION	DESCRIPTION:		FDOT DESIGN STANDARDS 2013	DITCH BOTTOM INLET TYPE A	INDEX NO.	SHEET NO.
07/01/07			STATE OF FLORIDA DEPARTMENT OF TRANSPORTATION			230	2

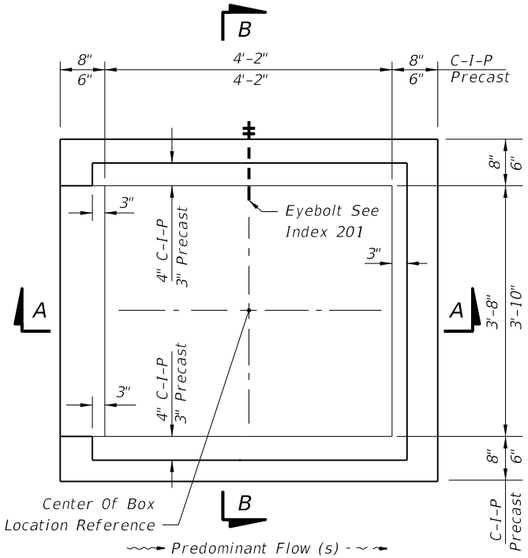

(Grate, Apron And Slot Not Shown)

PLAN

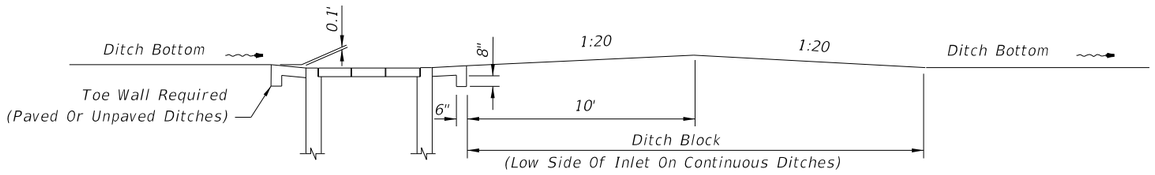

SECTION EE

DITCH BLOCK

ESTIMATED QUANTITIES For Informational Purposes Only			
SLOT TYPE	PAVEMENT		SOD
	SY	CY	SY
Single Slot	6.2	0.9	14
Double Slot	8.1	1.1	19

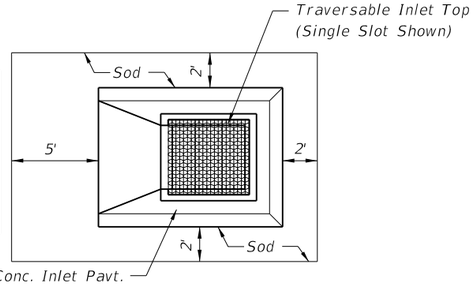

CONCRETE INLET PAVEMENT AND SODDING

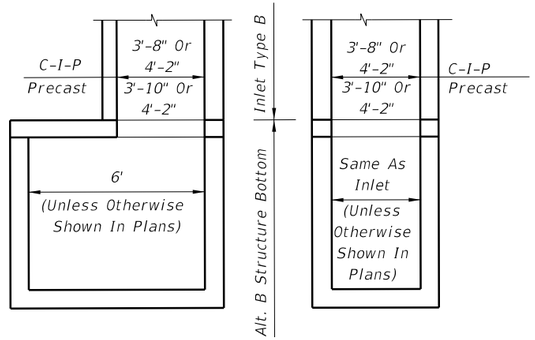

NOTE: Alt. B Structure Bottom Only. See Index No. 200 for structure bottom details and pipe opening reinforcement.

INLET WITH STRUCTURE BOTTOM

RECOMMENDED MAXIMUM PIPE SIZES	
INLET INSIDE WIDTH	PIPE SIZE
3'-8"	30"
4'-2"	36"

Note: Recommended sizes are for concrete pipe. Sizes for other types of pipe must be verified for fit in accordance with Index No. 201. For larger pipe see bottom detail above and Index No. 200.

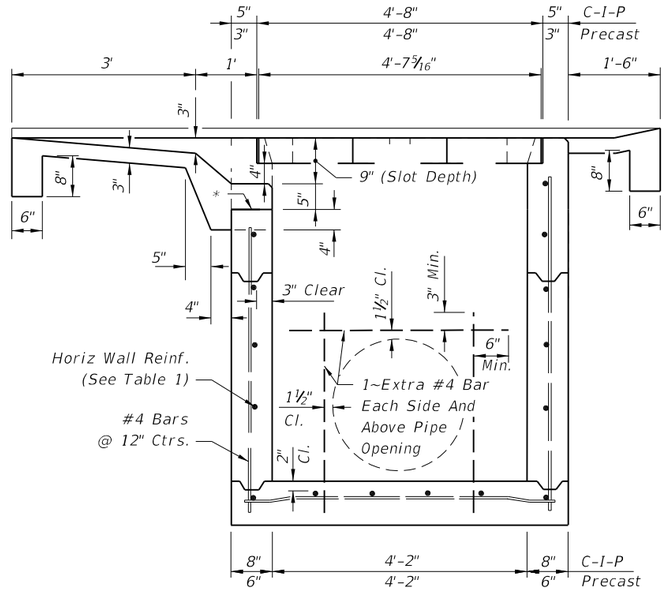

SECTION AA

*See Sheet 2 of 3

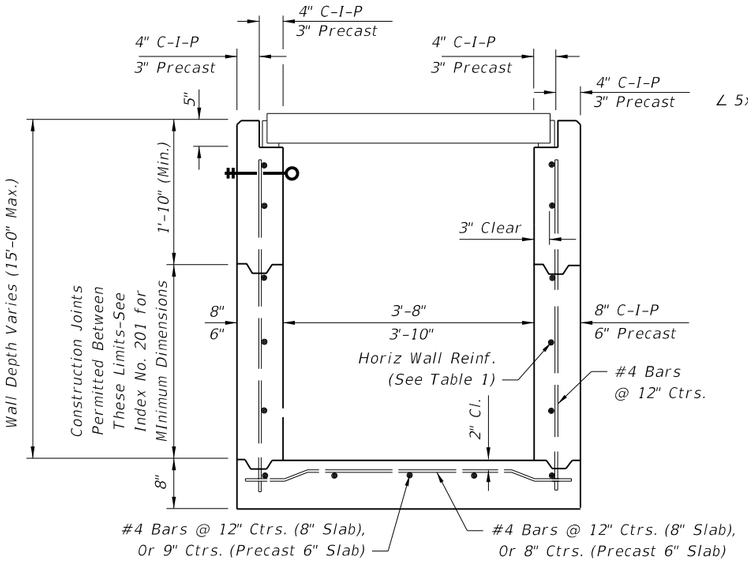

SECTION BB

HORIZONTAL WALL REINFORCING SCHEDULE (TABLE 1)

WALL DEPTH	SCHEDULE	AREA (in.²/ft.)	MAX. SPACING	
			BARS	WWF
0' – 5'	A12	0.20	12"	8"
5' – 9'	A6	0.20	6"	5"
9' – 13'	B5.5	0.24	5½"	5"
13' – 15'	Special	0.267	5"	4"

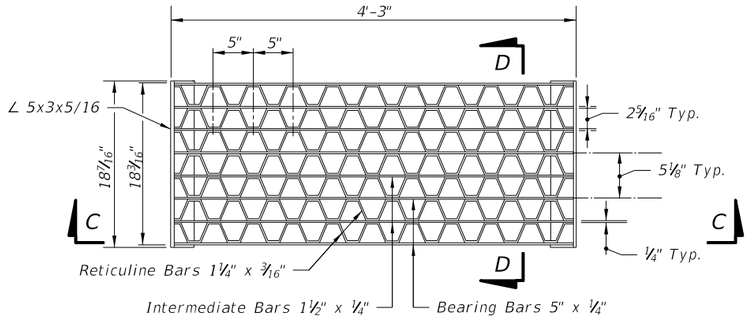

PLAN

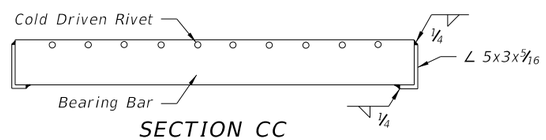

SECTION CC

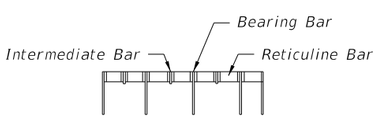

SECTION DD

STEEL GRATE

C:\d\projects\standards\roadway\00200-s\00231-01.dgn
rd960rh
1:52:48 PM
6/28/2012

LAST REVISION	REVISION	DESCRIPTION:	FDOT DESIGN STANDARDS 2013	DITCH BOTTOM INLET TYPE B	INDEX NO.	SHEET NO.
07/01/09					231	1

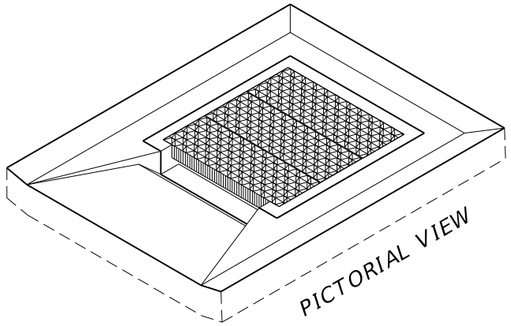

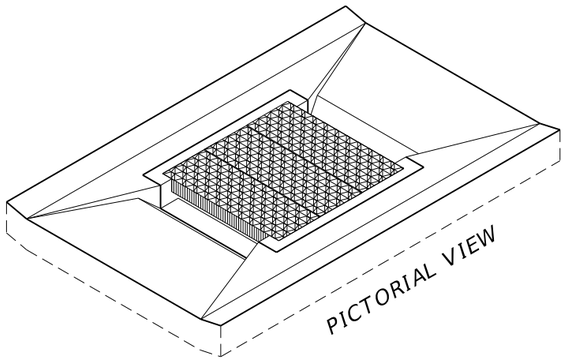

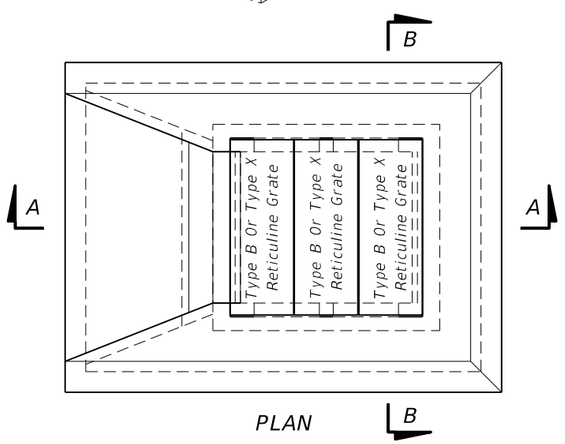

PLAN

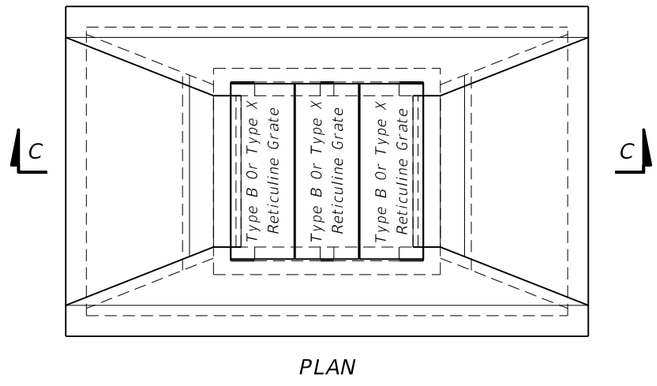

PLAN

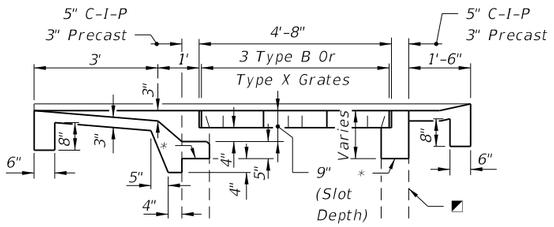

SECTION AA
SINGLE SLOT

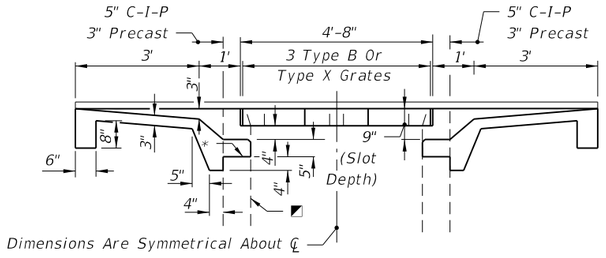

SECTION CC
DOUBLE SLOT

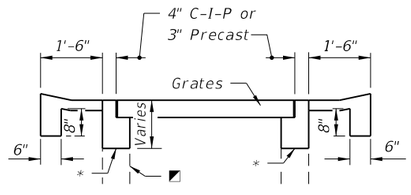

SECTION BB

◩ Inlet Box (Line Type Indicates Existing Box To Facilitate Depiction Of Partial Construction On Existing Inlets)

* On new boxes the traversable top may be cast as a monolithic unit or cast in segments, and the location of this line may be lower to facilitate handling and placement; however, the slot depth is to remain at 9 inches. See Index No. 201 for top to wall connection. For converting to traversable tops on existing inlets remove concrete to this line and expose the existing reinforcement. Reshape or splice in reinforcement to penetrate the rim and returns of the grate seat, and bend the reinforcement into the slot shelf to extend into the abutting throat pavement.

GENERAL NOTES

1. The general purpose of the inlet top designs are:
   a. For ditches, medians or other areas subject to heavy wheel loads. This inlet may be placed in areas subject to occasional pedestrian traffic such as landscaped areas and pavement areas where pedestrians can walk around the inlet. Inlet not suitable for bicycle traffic.
   b. Provide full grate and horizontal slot designs for new construction.
   c. Provide full grate and horizontal slot designs for replacing the vertical slot tops on existing Inlets Type B and Type X that are in locations subject to occasional pedestrian traffic.
2. All reinforcing is Grade 60 bars with 2" min. cover unless otherwise noted. See Index No. 201 for equivalent area of welded wire fabric. Bars to be cut or bent for min. 1½" clearance around pipe.
3. All exposed edges and corners shall be ¾" chamfer or tooled to ¼" radius.
4. When Alternate G grates are specified in the plans, the grates are to be hot-dip galvanized after fabrication.
5. Cost for constructing traversable tops on new inlet boxes shall be included in the contract unit price for Inlets (DT BOT) (Type B), EA., and shall include the cost for surrounding concrete inlet pavement. Existing Inlets Type B and Inlets Type X that are converted to traversable inlet tops shall be paid for under the contract unit price for Inlets (DT BOT) (Type B) (Partial), EA. Unit price and payment shall be full compensation for inlet conversion and shall include the removal and disposal of any existing concrete inlet pavement; the removal and stockpiling or disposal of sufficient material from the existing inlet box to facilitate construction of the required inlet top; construction of the required inlet conversion; backfill construction; construction of concrete inlet pavement; reusing, supplementing, transferring or replacing grates as required by plans or as directed by the Engineer; any required earthwork for ditch restoration within 30' of the inlet; and, restoration of disturbed turf.
6. Ditch pavement shall be paid for, separate from the inlet and concrete inlet pavement, by pavement types and units as called for in the plans.
7. Sod will be paid for under the contract unit price for Performance Turf, SY.
8. For supplementary details see Index No. 201.
9. All dimensions are for both precast and cast-in-place inlets unless otherwise noted.

DESIGN NOTES

1. The type of top (single or double slots) depends on the approach ditch configuration and the hydraulic requirements of the site. The designer will stipulate in the plans the type of top to be constructed at each individual inlet location.
2. On existing inlets, conversion grates shall be constructed at the original grate elevations unless other elevations are called for in the plans. When plans call for the inlet top to be constructed to support storm water detention, details for ditch modifications and underdrains shall be shown in the plans.

MAINTENANCE NOTES

1. Traversable inlet tops that are constructed by maintenance contract or by maintenance forces may reuse the existing grates that are determined by the Maintenance Engineer to be functionally sound, and their reuse is so directed by the Maintenance Engineer. Existing grates approved for reuse and new grates may be mixed, matched or replaced as directed by the Maintenance Engineer.

TRAVERSABLE TOPS FOR INLETS TYPE B AND FOR CONVERSIONS OF EXISTING INLETS TYPE B AND TYPE X

C:\d\projects\standards\roadway\00200-s\00231-02.dgn rd960rh 1:52:50 PM 6/28/2012

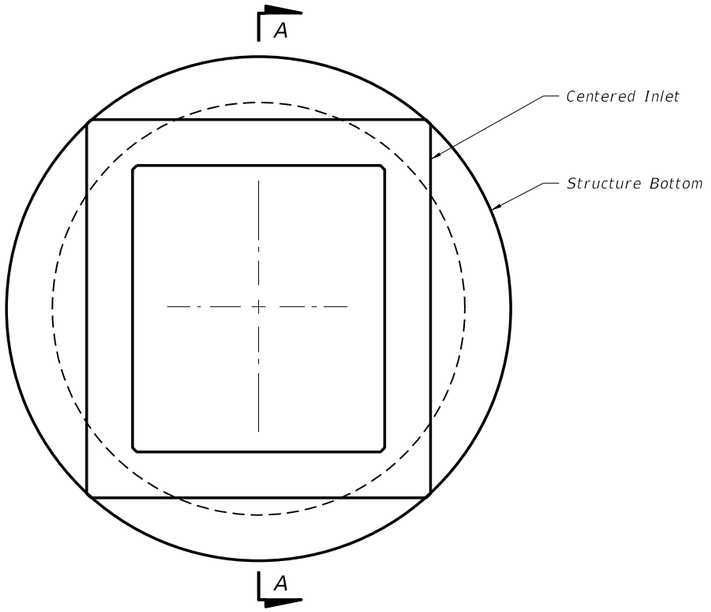

TOP VIEW

TOP SLAB OPENINGS		
DIAMETER	OPENING SIZE	
	MIN.	MAX.
6'-0" to 8'-0"	3'-8" x 4'-2"	3'-10" x 4'-2"

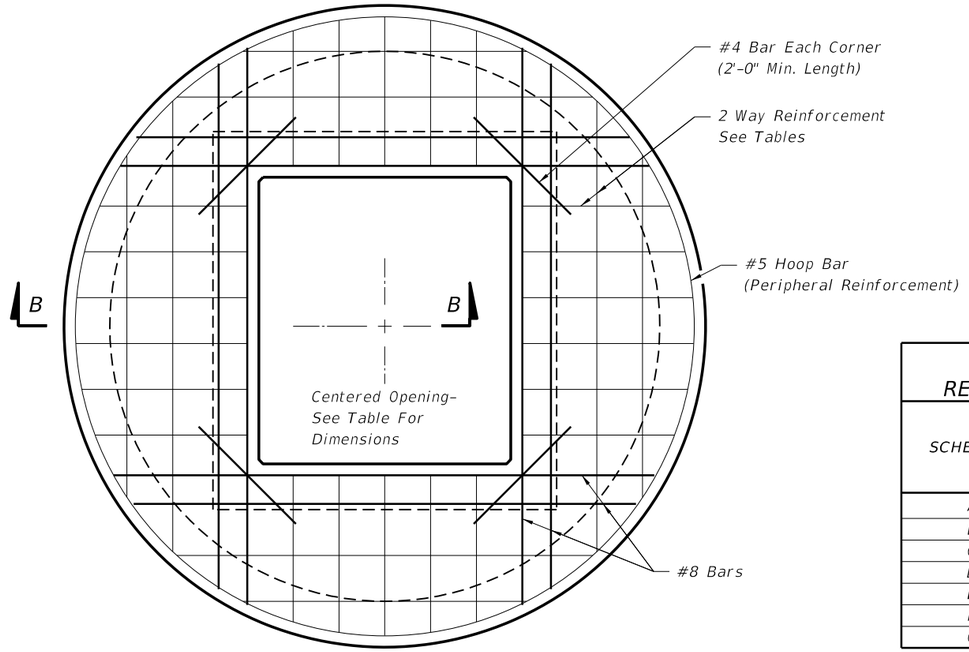

TOP SLAB REINFORCING DIAGRAM

TOP SLAB REINFORCING SCHEDULE	
SCHEDULE	GRADE 60 (BAR) OR 65 KSI & 70 KSI (WIRE FABRIC) $In^2/ft.$
A	0.20
B	0.24
C	0.37
D	0.53
E	0.73
F	1.06
G	1.45

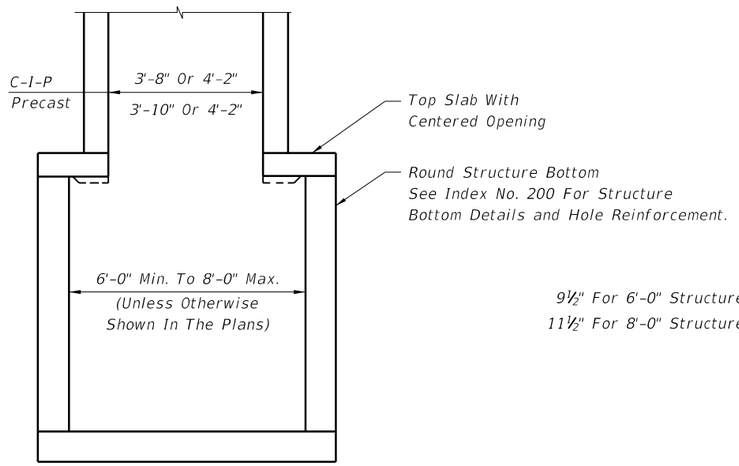

SECTION AA

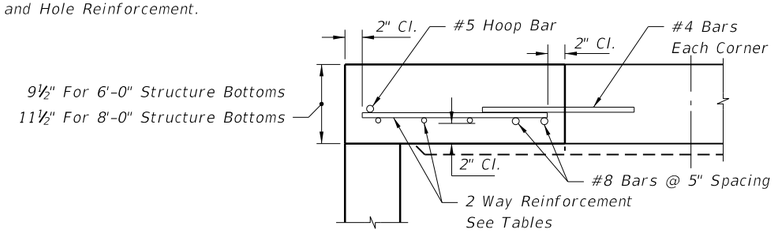

SECTION BB

TOP SLAB WITH CENTERED OPENING		
SLAB DEPTH	SLAB THICKNESS	REINFORCING (2 WAYS) SCHEDULE
SIZE: 6'-0"		
0.5' < 8'	9½"	B
8' < 18"	9½"	C
18' < 30'	9½"	D
30' < 37'	9½"	E
37'-40'	9½"	G
SIZE: 8'-0"		
≥0.5' < 9'	11½"	C
9' < 15'	11½"	D
15' < 23'	11½"	E
23' < 33'	11½"	E
33'-40'	11½"	G

ALT. A STRUCTURE BOTTOM FOR INLET TYPE B

LAST REVISION	REVISION	DESCRIPTION:		FDOT DESIGN STANDARDS 2013	DITCH BOTTOM INLET TYPE B	INDEX NO.	SHEET NO.
07/01/05						231	3

C:\d\projects\standards\roadway\00200-s\00231-03.dgn
rd960rh
1:52:53 PM
6/28/2012

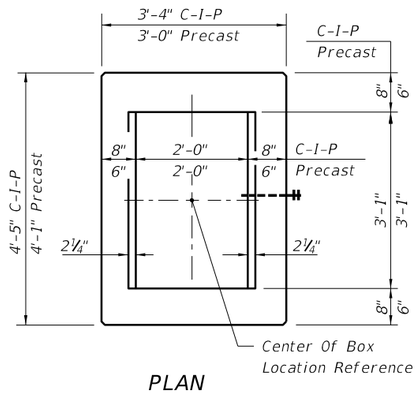

PLAN

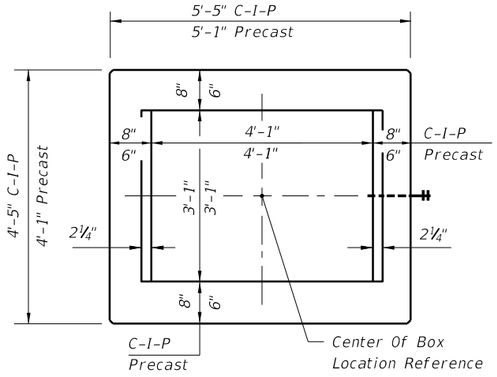

PLAN

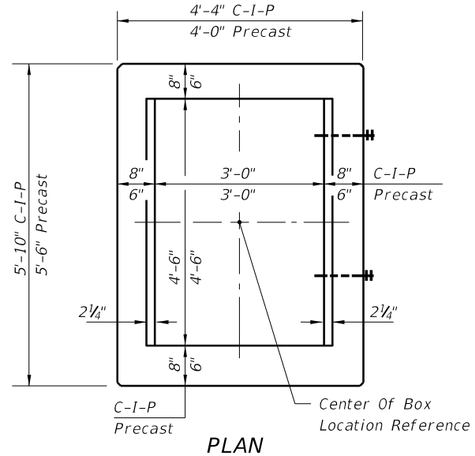

PLAN

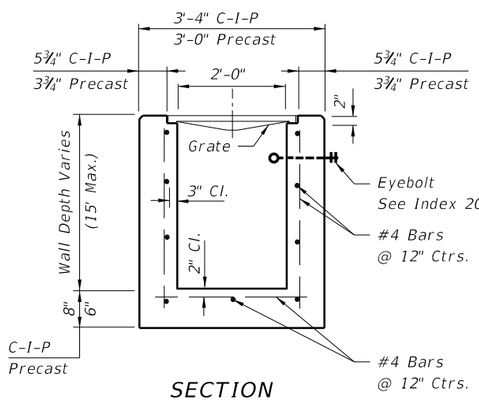

SECTION

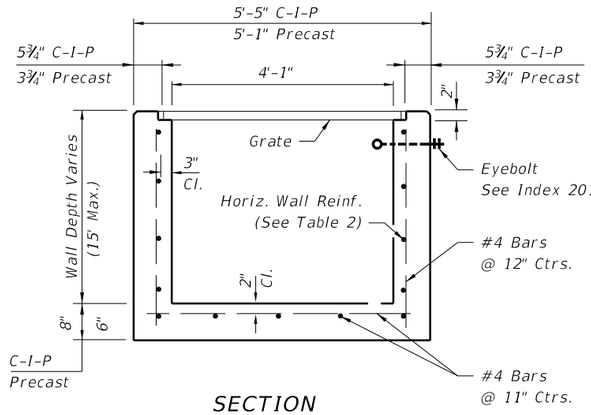

SECTION

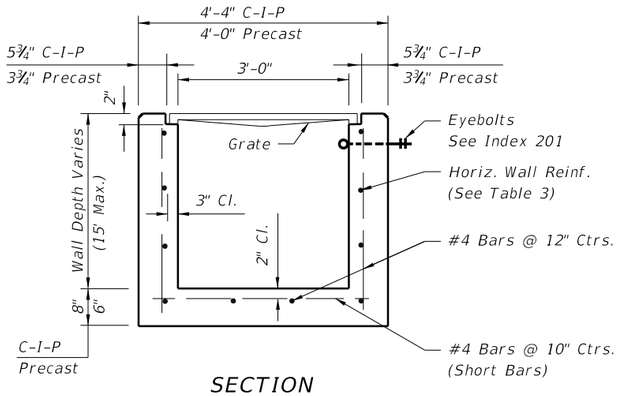

SECTION

HORIZONTAL WALL REINFORCING SCHEDULES (TABLE 1)

WALL DEPTH	SCHEDULE	AREA (in.²/ft.)	MAX. SPACING	
			BARS	WWF
0'-15'	A12	0.20	12"	8"

TYPE C

Recommended Maximum Pipe Size:

2'-0" Wall – 18" Pipe
3'-1" Wall – 24" Pipe (18" where an 18" pipe enters a 2'-0" wall)

HORIZONTAL WALL REINFORCING SCHEDULES (TABLE 2)

WALL DEPTH	SCHEDULE	AREA (in.²/ft.)	MAX. SPACING	
			BARS	WWF
0'-6'	A12	0.20	12"	8"
6'-10'	A6	0.20	6"	5"
10'-13'	A4	0.20	4"	3"
10'-15'	B5.5	0.24	5½"	5"

TYPE D

Recommended Maximum Pipe Size:

3'-1" Wall – 24" Pipe
4'-1" Wall – 36" Pipe

HORIZONTAL WALL REINFORCING SCHEDULES (TABLE 3)

WALL DEPTH	SCHEDULE	AREA (in.²/ft.)	MAX. SPACING	
			BARS	WWF
0'-5'	A12	0.20	12"	8"
0'-7.5'	A6	0.20	6"	5"
7.5'-10'	B5.5	0.24	5½"	5"
10'-15'	C6.5	0.37	6½"	6"

TYPE E

Recommended Maximum Pipe Size:

3'-0" Wall – 24" Pipe
4'-6" Wall – 36" Pipe

6/28/2012 1:52:55 PM rd960rh C:\d\projects\standards\roadway\00200-s\00232-01.dgn

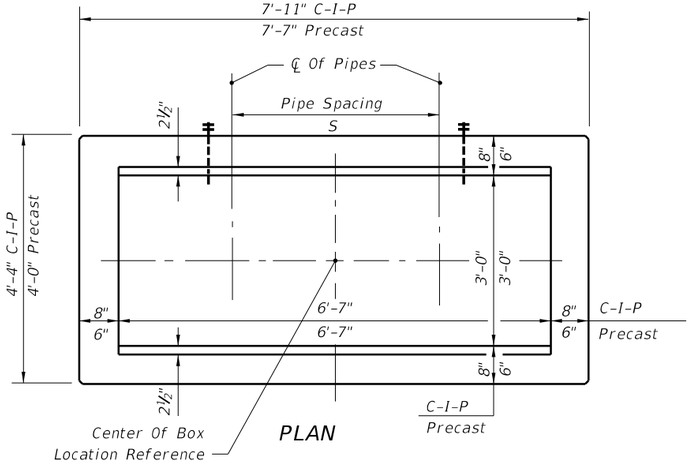

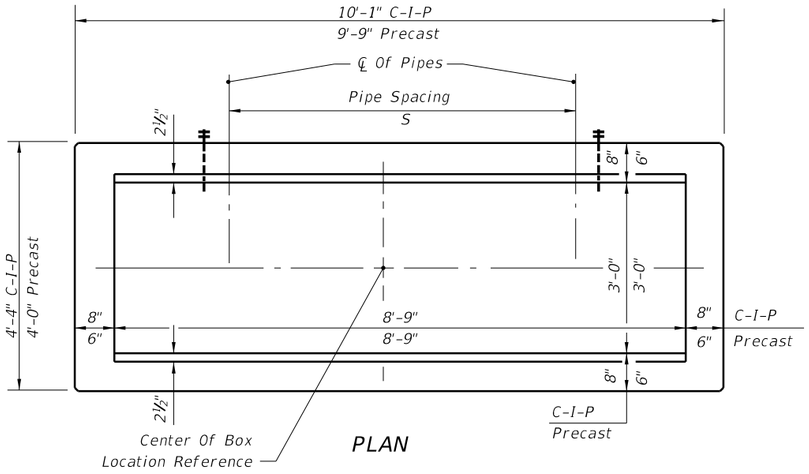

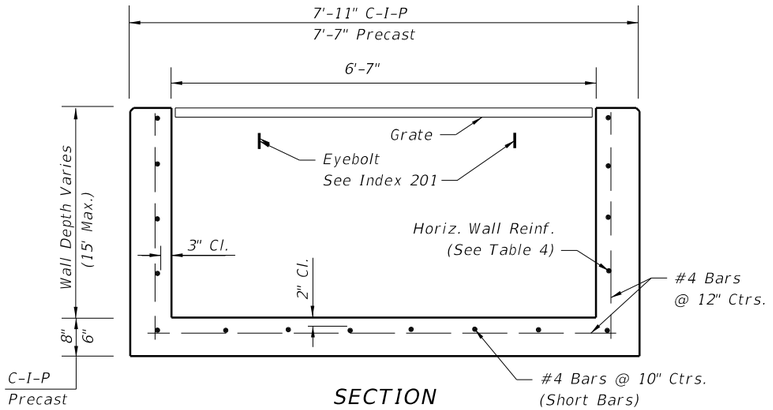

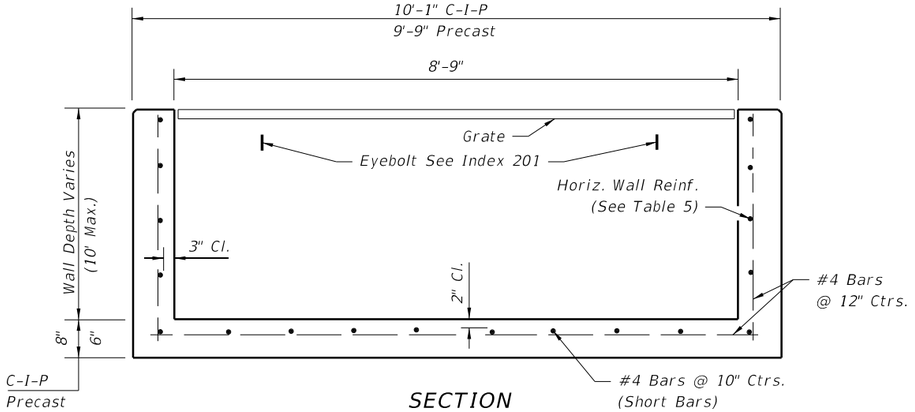

HORIZONTAL WALL REINFORCING SCHEDULES (TABLE 4)

WALL DEPTH	SCHEDULE	AREA (in.²/ft.)	MAX. SPACING	
			BARS	WWF
0'-5'	B5.5	0.24	5½"	5"
5'-7'	C6.5	0.37	6½"	6"
7'-15'	D4.5	0.53	4½"	4"

TYPE H (2 & 3-GRATE INLET)

Recommended Maximum Pipe Size:
3'-0" Wall - 24" Pipe
6'-7" Wall - 1-60" Pipe
Or 2-24" Pipe (S=3'-5")

HORIZONTAL WALL REINFORCING SCHEDULES (TABLE 5)

WALL DEPTH	SCHEDULE	AREA (in.²/ft.)	MAX. SPACING	
			BARS	WWF
0'-5'	C3.5	0.37	3½"	3"
5'-10'	D4.5	0.53	4½"	4"

TYPE H (4-GRATE INLET)

Recommended Maximum Pipe Size:
3'-0" Wall - 24" Pipe
8'-9" Wall - 1-78" Pipe
Or 2-30" Pipe (S=4'-3")

GENERAL NOTES

See Sheet 3 of 7.

C:\d\projects\standards\roadway\00200-s\00232-02.dgn
rd960rh
1:52:57 PM
6/28/2012

LAST REVISION	REVISION	DESCRIPTION:				
07/01/05			FDOT DESIGN STANDARDS 2013	DITCH BOTTOM INLET TYPES C, D, E AND H	INDEX NO. 232	SHEET NO. 2

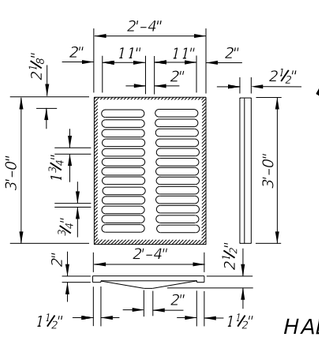

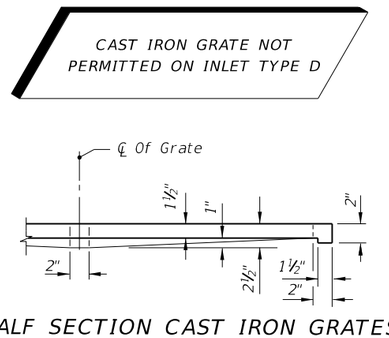

HALF SECTION CAST IRON GRATES

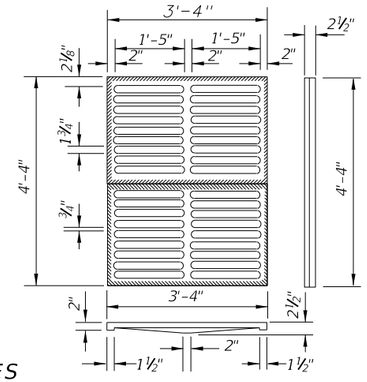

TYPE C
Approx. Weight 235 Lbs.

TYPE E
Approx. Weight 465 Lbs.

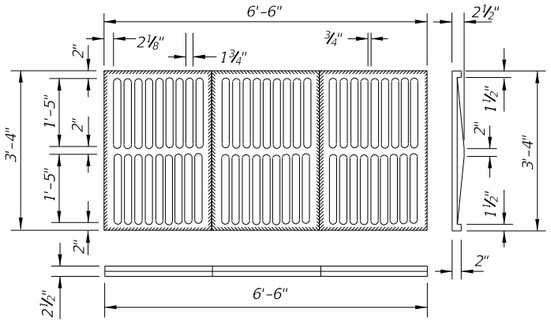

TYPE H (3-GRATE INLET)
Approx. Weight 725 Lbs.

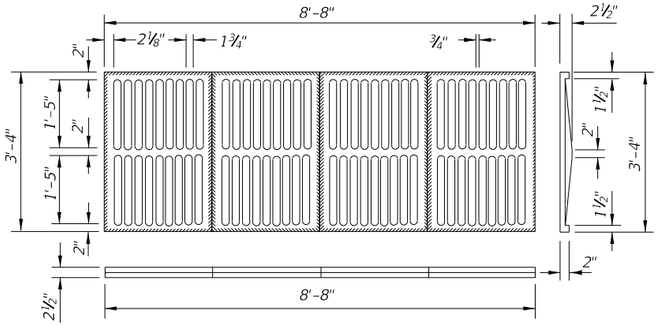

TYPE H (4-GRATE INLET)
Approx. Weight 967 Lbs.

CAST IRON GRATES

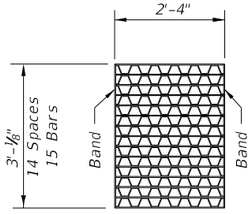

TYPE C
Straight Bars 2"x ¼"
Reticuline Bars 1¼" x 3⁄16"
Bands 2" x ¼"
Approx. Weight 104 Lbs.

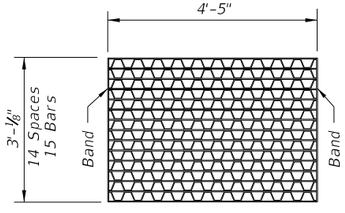

TYPE D
Straight Bars 2" x ¼"
Reticuline Bars 1¼" x 3⁄16"
Bands 2" x ¼"
Approx. Weight 190 Lbs.

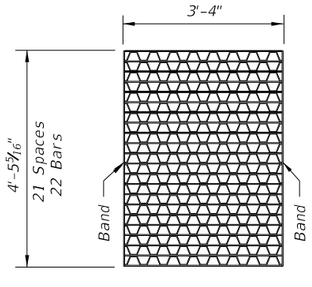

TYPE E
Straight Bars 2" x ¼"
Reticuline Bars 1¼" x 3⁄16"
Bands 2" x ¼"
Approx. Weight 215 Lbs.

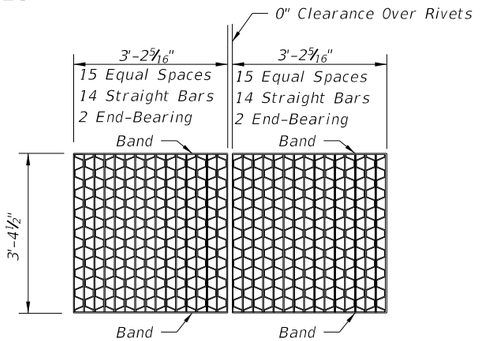

TYPE H (2-GRATE INLET)
Straight End-Bearing Bars 2" x 3⁄8"
Straight Bearing Bars 2" x ¼"
Reticuline Bars 1¼" x 3⁄16"
Banding Bars 2" x ¼"
Approx. Total Weight 310 Lbs.

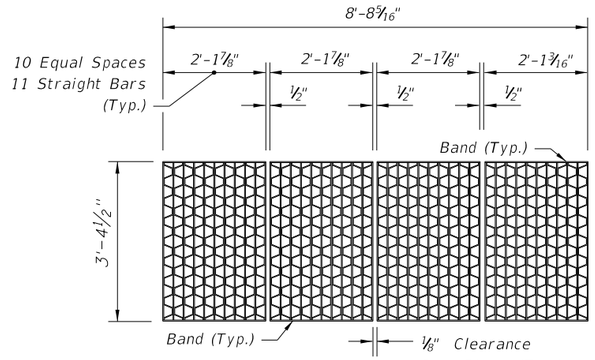

TYPE H (4-GRATE INLET)
Straight End-Bearing Bars 2" x ¼"
Reticuline Bars 1¼" x 3⁄16"
Banding Bars 2" x 3⁄16"
Approx. Total Weight 388 Lbs.

STEEL GRATES

NOTE: Steel Grates Are Required On Inlets With Traversable Slots And On Inlets where Bicycle Traffic Is Anticipated.

GENERAL NOTES

1. *These inlets are suitable for bicycle traffic and are to be used in ditches, medians and other areas subject to infrequent traffic loadings but are not to be placed in areas subject to any heavy wheel loads. These inlets may be placed in areas subject to occasional pedestrian traffic such as landscaped areas and pavement areas where pedestrians can walk around the inlet.*

2. *Inlets subject to minimal debris should be constructed without slots. Where debris is a problem inlets should be constructed with slots. Slotted inlets located within roadway clear zones and areas subject to pedestrians shall have traversable slots. The traversable slot modification is not adaptable to inlet Type H. Slots may be constructed at either or both ends as shown on plans. Traversable slots shall not be used in areas subject to occasional bicycle traffic.*

3. *Steel grates are to be used on all inlets where bicycle traffic is anticipated. Steel grates are to be used on all inlets with traversable slots. Either cast iron or steel grates may be used on inlets without slots where bicycle traffic is not anticipated. Either cast iron or steel grates may be used on all inlets with non-traversable slots. Subject to the selection described above, when Alternate G grate is specified in the plans, either the steel grate, hot dip galvanized after fabrication, or the cast iron grate may be used, unless the plans stipulate the particular type.*

4. *Recommended maximum pipe sizes shown are for concrete pipe. Size for other types of pipe must be checked for fit.*

5. *All exposed edges and corners shall be ¾" chamfer or tooled to ¼" radius.*

6. *Concrete inlet pavement to be used on inlets without slots and inlets with non-traversable slots only when called for in the plans; but required on all traversable slot inlets. Cost to be included in contract unit price for inlets. Quantities shown are for information only.*

7. *Traversable slots constructed in existing inlets shall be paid for as inlets partial. For conversion work and method of payment see 'TRAVERSABLE SLOT INLETS (PARTIAL) FOR EXISTING INLETS'.*

8. *Sodding to be used on all inlets not located in paved areas and paid for under contract unit price for Performance Turf, SY.*

9. *For supplementary details see Index No. 201.*

10. *All reinforcing is Grade 60 bars with 2" min. cover unless otherwise noted. Bars to be cut or bent for 1½" clearance around pipe opening. Provide one additional #4 bar above and at each side of pipe opening.*

C:\d\projects\standards\roadway\00200-s\00232-03.dgn rd960rh 1:52:59 PM 6/28/2012

LAST REVISION	REVISION	DESCRIPTION:				
07/01/10			FDOT DESIGN STANDARDS 2013	DITCH BOTTOM INLET TYPES C, D, E AND H	INDEX NO. 232	SHEET NO. 3

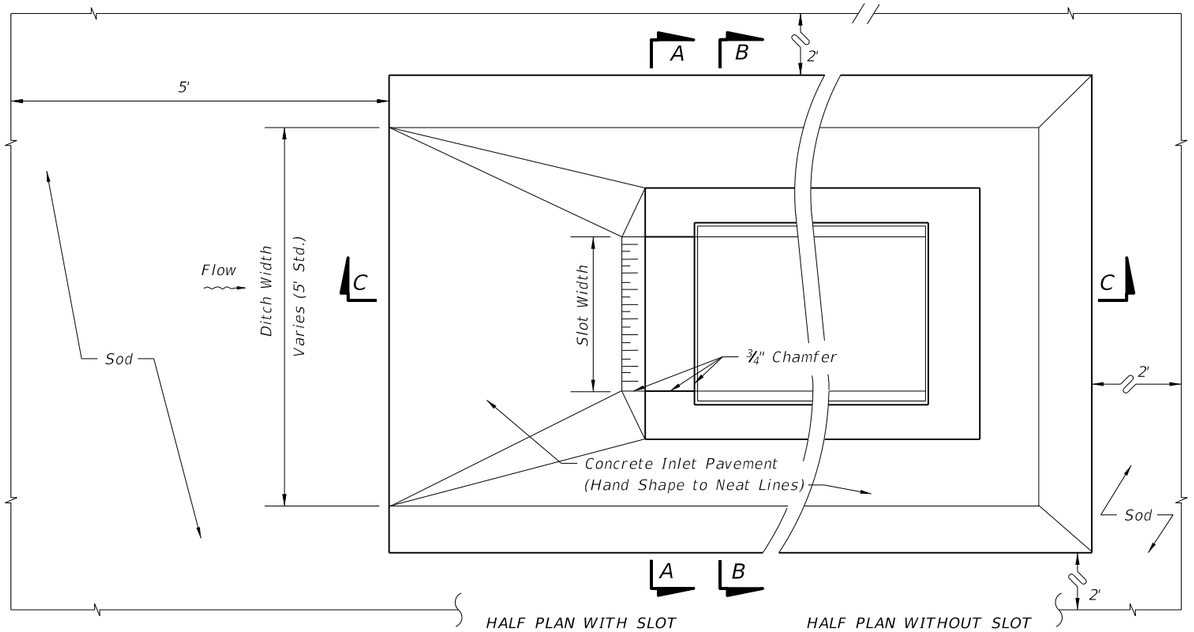

PLAN VIEW

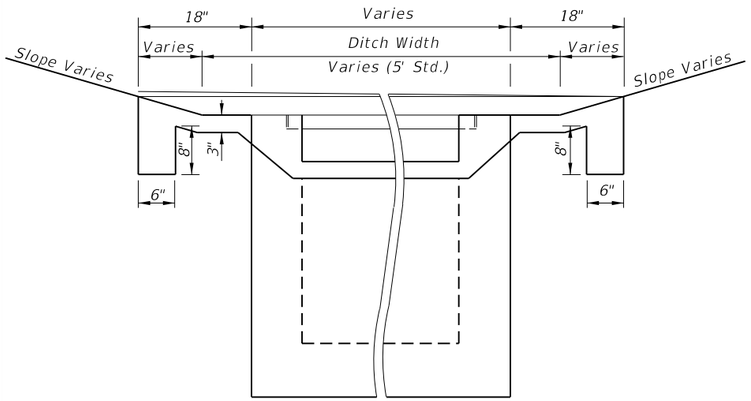

SECTION AA

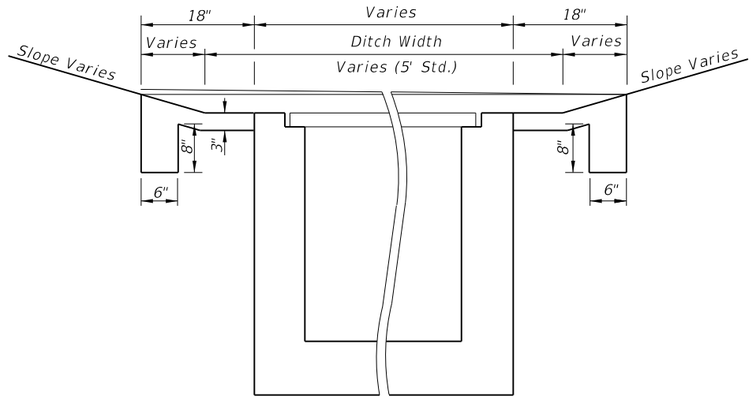

SECTION BB

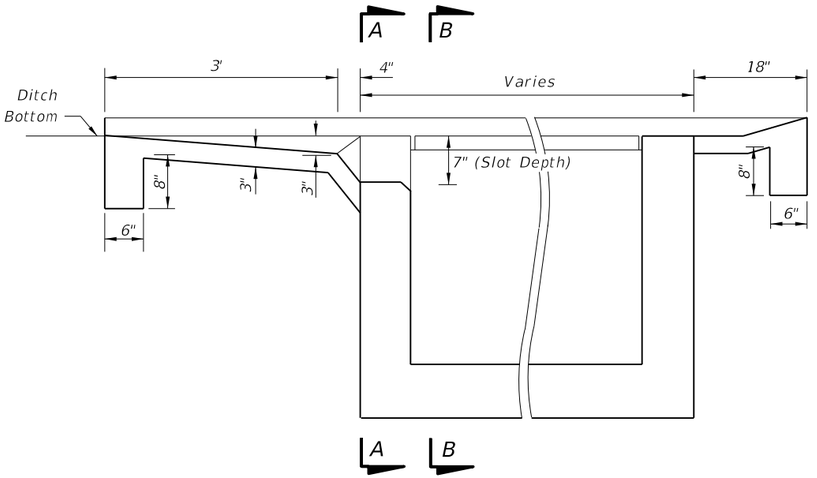

SECTION CC

PAVEMENT AND SODDING QUANTITIES FOR TRAVERSABLE SLOTS						
Inlet	Pavement				Sod	
	Single Slot		Double Slot		Single Slot	Double Slot
	SY	CY	SY	CY	SY	SY
C	4.87	0.77	6.16	0.93	12	16
D	5.99	0.91	7.70	1.10	14	19
E	5.88	0.91	7.37	1.08	14	18

TRAVERSABLE SLOTS

C:\d\projects\standards\roadway\00200-s\00232-04.dgn
6/28/2012 1:53:01 PM rd960rh

LAST REVISION	REVISION	DESCRIPTION:				
07/01/07			FDOT DESIGN STANDARDS 2013	DITCH BOTTOM INLET TYPES C, D, E AND H	INDEX NO. 232	SHEET NO. 4

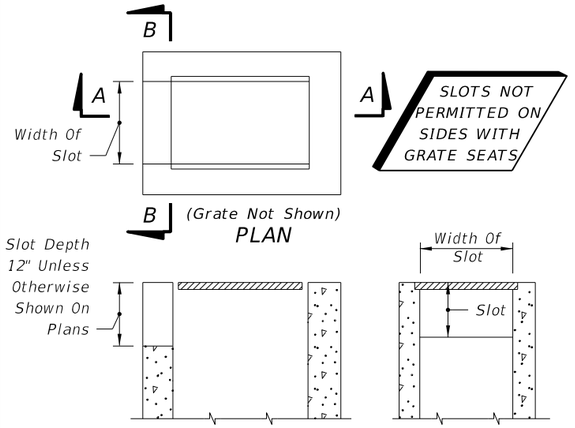

SECTION AA SECTION BB

NON-TRAVERSABLE SLOTS

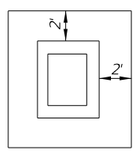

SOD ONLY

Inlet	Sod SY
C	6
D	6
E	7
H	8

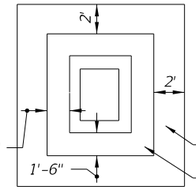

Inlet	Pavt. CY	Sod SY
C	0.30	8
D	0.36	9
E	0.37	9
H	0.45	11

PAVT. AND SOD

NOTE: See General Notes Nos. 6 and 7, Sheet 3 of 7.

SODDING AND PAVEMENT FOR INLETS WITHOUT SLOTS AND INLETS WITH NON-TRAVERSABLE SLOTS

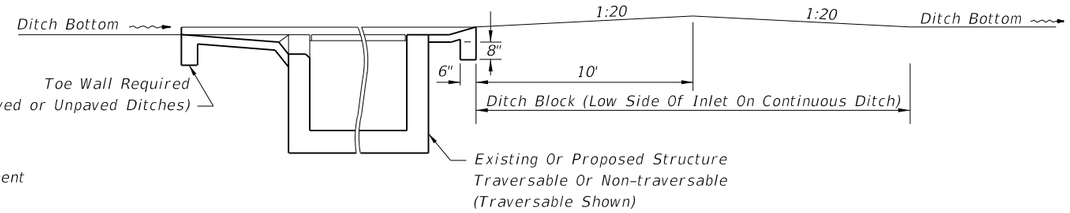

DITCH BLOCK FOR INLETS WITH OR WITHOUT SLOTS

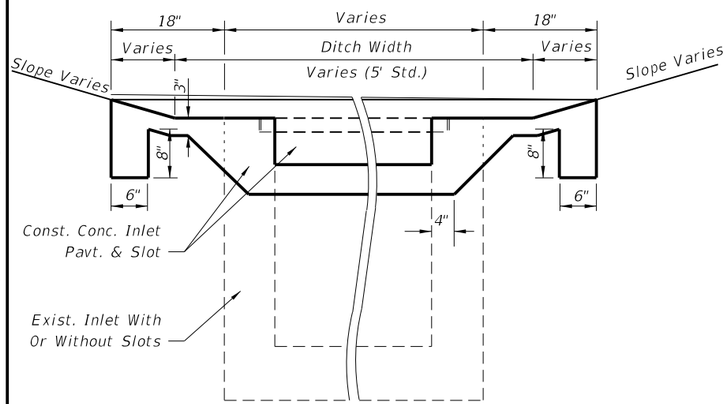

SECTION AA

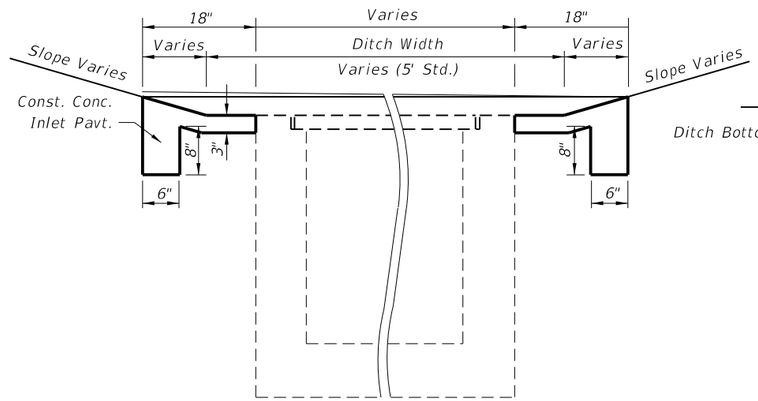

SECTION BB

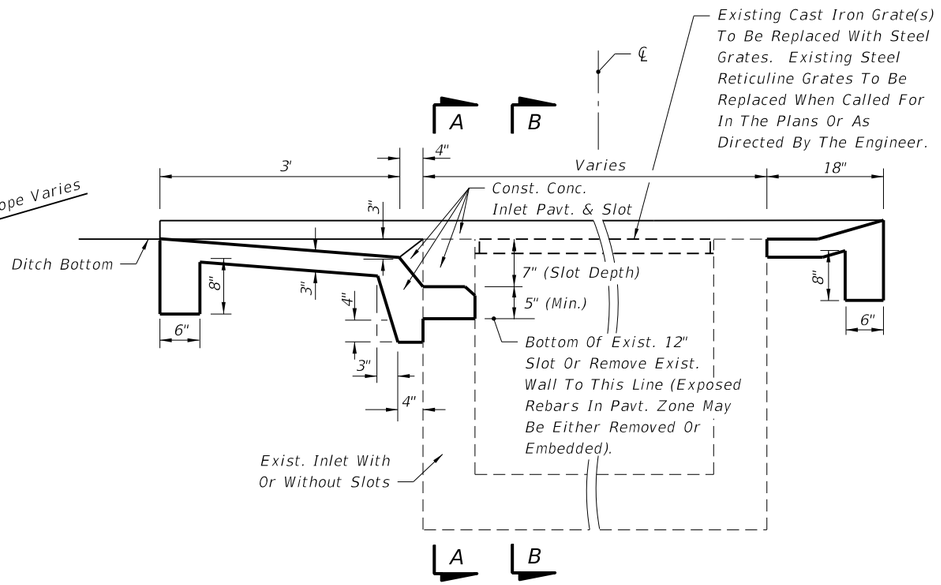

SINGLE SLOT SHOWN (DOUBLE SLOTS SYMMETRICAL ABOUT CENTERLINE)

SECTION CC (CASE I)

PAVEMENT AND SODDING QUANTITIES FOR TRAVERSABLE SLOTS

Inlet	Pavement				Sod	
	Single Slot		Double Slot		Single Slot	Double Slot
	SY	CY	SY	CY	SY	SY
C	4.87	0.83	6.16	1.05	12	16
D	5.99	1.01	7.70	1.30	14	19
E	5.88	0.99	7.37	1.24	14	18

NOTE: For plan view and additional details see Sheet 4 of 7.
For payment see General Notes Nos. 6 and 7, Sheet 3 of 7.

TRAVERSABLE SLOTS FOR EXISTING INLETS

C:\d\projects\standards\roadway\00200-s\00232-05.dgn rd960rh 1:53:03 PM 6/28/2012

LAST REVISION	REVISION	DESCRIPTION:	FDOT DESIGN STANDARDS 2013	DITCH BOTTOM INLET TYPES C, D, E AND H	INDEX NO.	SHEET NO.
00					232	5

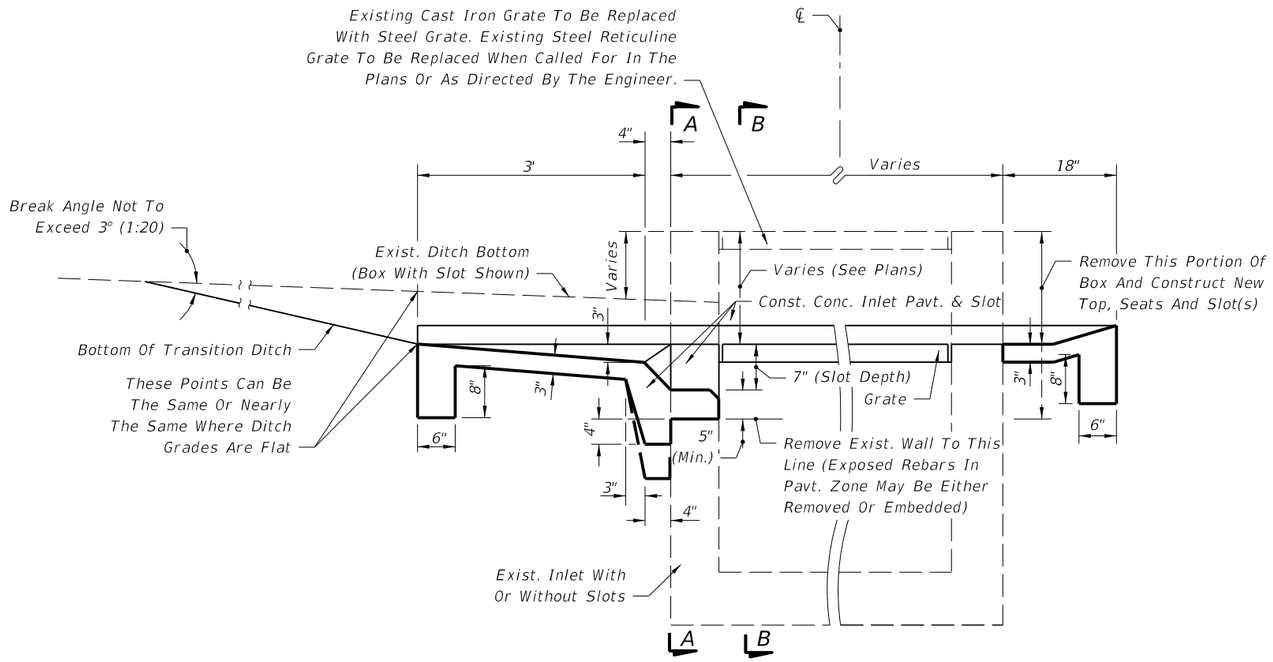

SINGLE SLOT SHOWN (DOUBLE SLOTS SYMMETRICAL ABOUT CENTERLINE) SECTION CC (CASE 2)

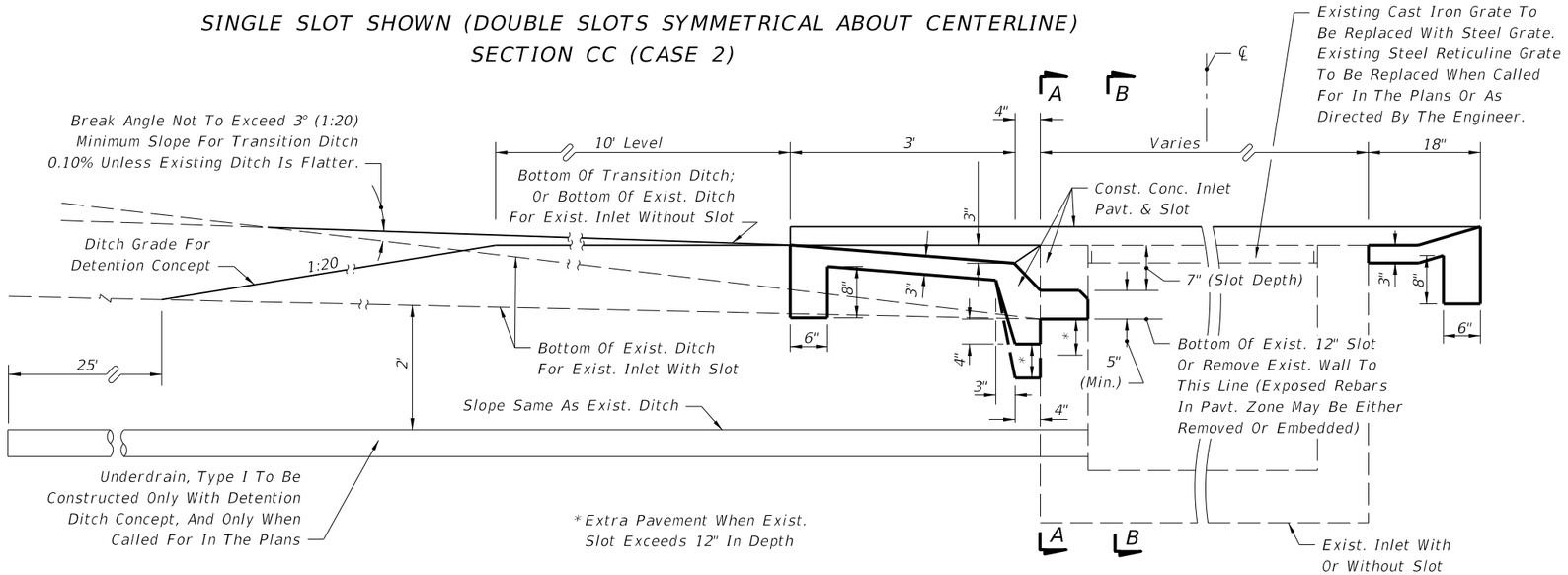

SINGLE SLOT SHOWN (DOUBLE SLOTS SYMMETRICAL ABOUT CENTERLINE) SECTION CC (CASE 3)

TRAVERSABLE SLOT INLETS (PARTIAL) FOR EXISTING INLETS

DESIGN NOTES FOR TRAVERSABLE SLOT INLETS (PARTIAL) FOR EXISTING INLETS

1. The general purpose of these conversions is to remove the hazard of the protruding inlet top, while not creating a hazard by depressing the top too deeply.

2. The corrective procedure depends on the approach ditch grade and hydraulic requirements of the site. The selection of the appropriate case depends on the relationship between inlet top and ditch elevation, and, on the vertical clearance between the top of the uppermost pipe(s) and the grate. The purpose for the Case 1 conversion is to add the traversable slot to an existing inlet where top removal, change in grate elevation and ditch transitions are not required. Case 2 will normally be applicable to ditches with flatter grades adjoining the inlet. Case 3 will normally be applicable to ditches with steeper grades adjoining the inlet where build up of the existing ditch is acceptable.

3. The designer shall stipulate in the plans which case is to be constructed at each individual inlet location.

   Where the existing inlet top is above the existing ditch (Case 2) but borrow material will be required to adjust the ditch (Case 3), and vertical clearance or other conditions do not prevent removal of the inlet top, the designer should call for Case 2. The designer shall determine if ditch reconstruction is required more than 35 feet beyond any traversable slot side and shall include separate pay items in the plans to cover the cost for that portion of required ditch reconstruction exceeding the 35 foot limit. The designer shall also determine whether ditch pavement is required for ditch restoration within the 35 foot limit and include that pavement under a pay item separate from the inlets partial.

   When the detention ditch concept is to be used with Case 3, the designer shall stipulate 'Case 3 (Detention)' in the plans.

   The designer shall determine whether tight soil or other conditions at each individual inlet indicates the need for underdrain in Case 3 conversions and shall call for Underdrain, Type I in the plans.

METHOD OF PAYMENT FOR TRAVERSABLE SLOT INLETS (PARTIAL) FOR EXISTING INLETS

1. Existing inlets converted to traversable slot tops under Cases 1, 2 and 3 shall be paid for as inlets partial, each. Case shall not be included in the pay item description.

2. All ditch reconstruction work within 35 feet of each traversable slot conversion, whether required by these details or as a direct result of the conversion, shall be included as a part of the partial cost. Reconstruction work shall include excavation and removal of surplus materials or borrow materials in place, grading, compaction, shaping and restoration of disturbed turf. Sodding, ditch pavement and underdrain are not included as part of the inlet partial cost and are to be paid for separately.

3. Concrete inlet pavement and sodding shall be in accordance with the sections on this detail and with the Plan on Sheet 4 and Sections AA, BB and CC (as Case 1) and tabular quantities on Sheet 5.

4. Unit price and payment shall constitute full compensation for inlet conversion (including concrete inlet paving and replacement grate(s)), ditch reconstruction, restoration of disturbed turf, and shall be paid for under the contract price for Inlets (DT Bot) (Type __) (Partial), each.

   Sodding shall be paid for under the contract unit price for Performance Turf, SY.

   Ditch pavement shall be paid for separate from the inlet by pavement type(s) and unit(s) as called for in the plans.

C:\d\projects\standards\roadway\00200-s\00232-06.dgn rd960rh 1:53:05 PM 6/28/2012

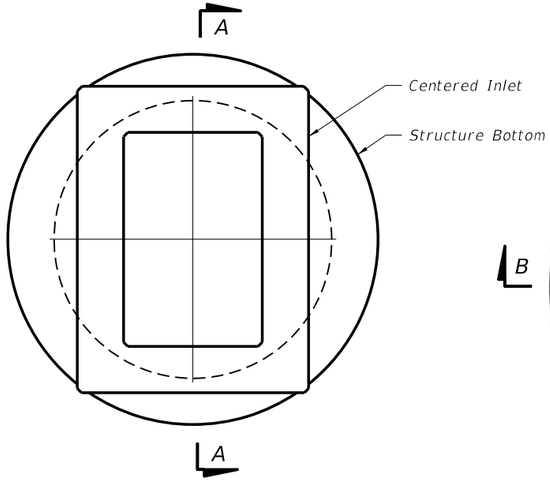

TOP VIEW

TOP SLAB OPENINGS		
DIAMETER	OPENING SIZE	
	MIN.	MAX.
4'-0"	2'-0" x 3'-1"	2'-0" x 3'-1"
5'-0"	2'-0" x 3'-1"	3'-1" x 4'-1"
6'-0"	2'-0" x 3'-1"	3'-0" x 4'-6"
8'-0"	2'-0" x 3'-1"	3'-0" x 4'-6"

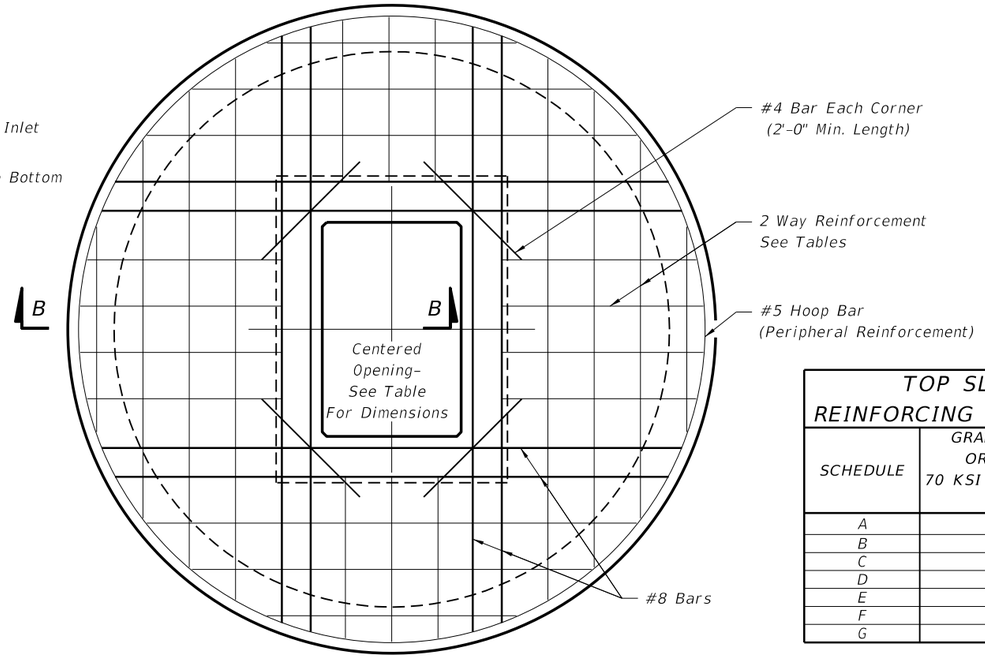

TOP SLAB REINFORCING DIAGRAM

TOP SLAB REINFORCING SCHEDULE	
SCHEDULE	GRADE 60 (BAR) OR 65 KSI & 70 KSI (WIRE FABRIC) $In.^2/ft.$
A	0.20
B	0.24
C	0.37
D	0.53
E	0.73
F	1.06
G	1.45

TOP SLAB WITH CENTERED OPENING		
SLAB DEPTH	SLAB THICKNESS	REINFORCING (2 WAYS) SCHEDULE
SIZE: 4'-0"		
≥0.5'-40'	9½"	C
SIZE: 5'-0"		
≥0.5' < 30'	9½"	C
30'-40'	9½"	D
SIZE: 6'-0"		
0.5' < 8'	9½"	B
8' < 18'	9½"	C
18' < 30'	9½"	D
30' < 37'	9½"	E
37'-40'	9½"	G
SIZE: 8'-0"		
≥0.5' < 9'	11½"	C
9' < 15'	11½"	D
15' < 23'	11½"	E
23' < 33'	11½"	E
33'-40'	11½"	G

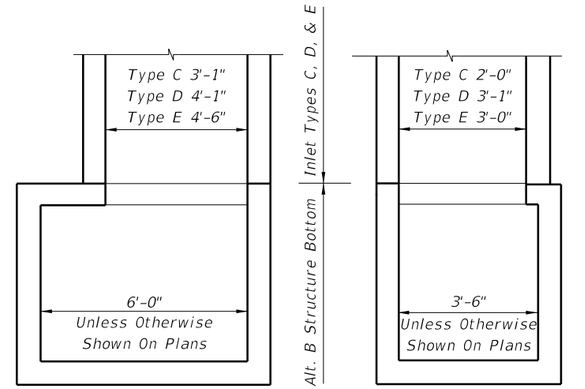

See Index No. 200 for structure bottom details and hole reinforcement.

ALT. B STRUCTURE BOTTOM FOR INLETS TYPE C, D & E

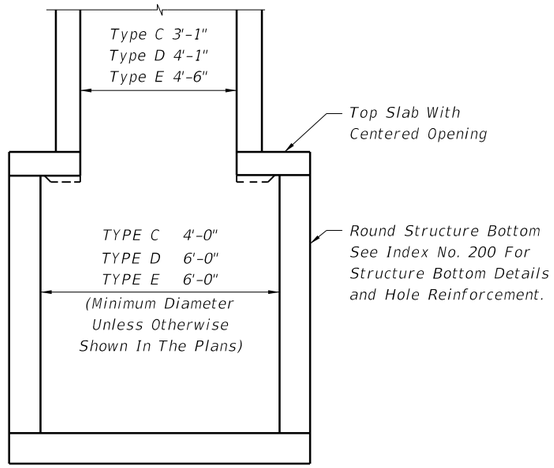

SECTION AA

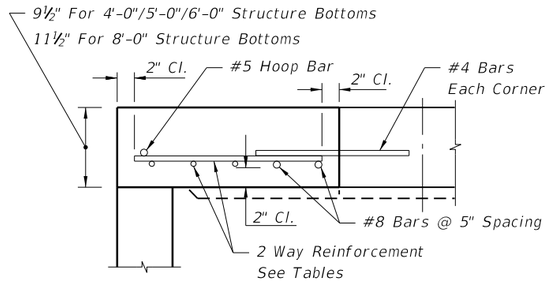

SECTION BB

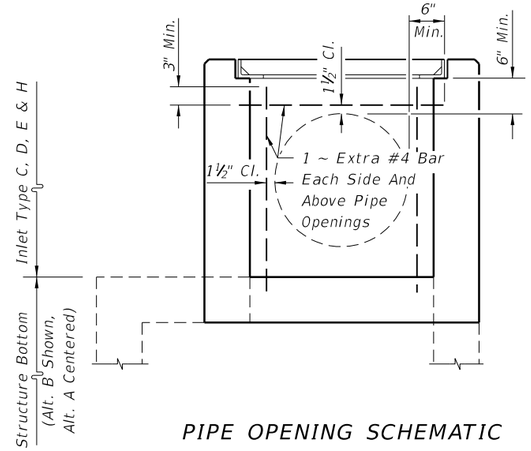

PIPE OPENING SCHEMATIC

ALT. A STRUCTURE BOTTOM FOR INLETS TYPE C, D AND E

LAST REVISION	REVISION	DESCRIPTION:				
07/01/05			FDOT DESIGN STANDARDS 2013	DITCH BOTTOM INLET TYPES C, D, E AND H	INDEX NO. 232	SHEET NO. 7

6/28/2012 1:53:07 PM rd960rh C:\d\projects\standards\roadway\00200-s\00232-07.dgn

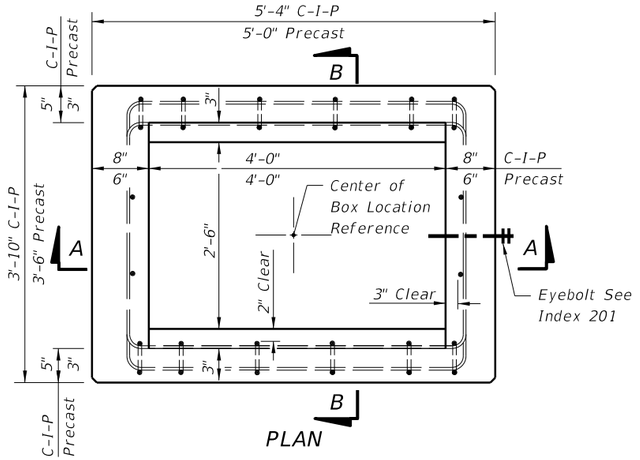

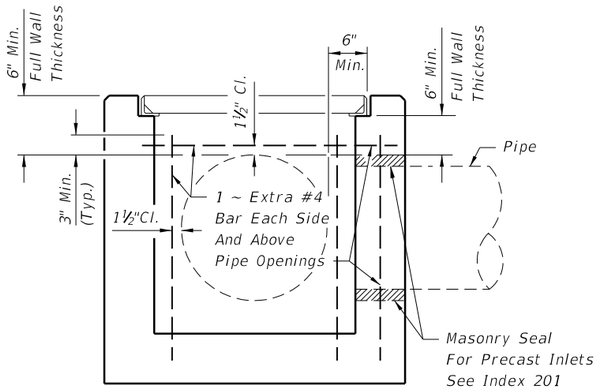

(TYPE F SHOWN, TYPE G SIMILAR)

PIPE OPENING SCHEMATIC

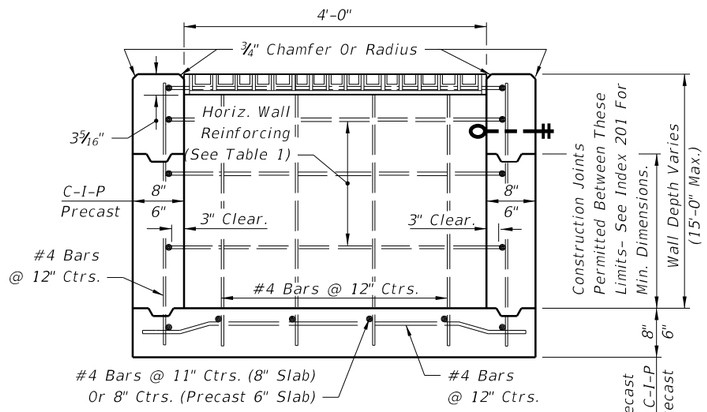

SECTION AA

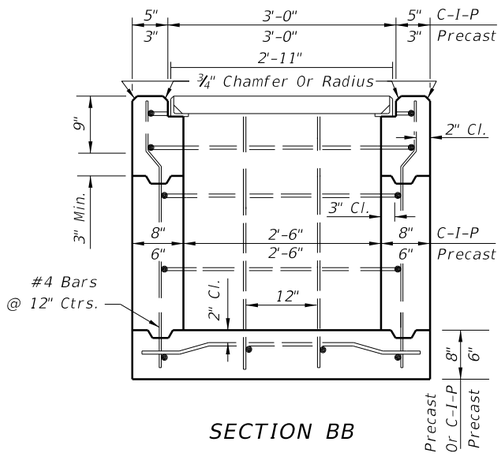

SECTION BB

SECTION CC

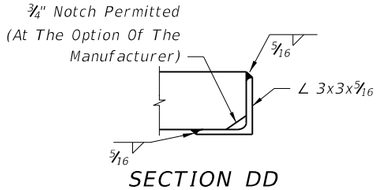

SECTION DD

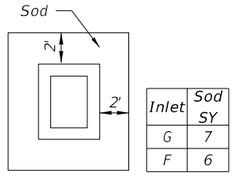

Inlet	Sod SY
G	7
F	6

SOD ONLY

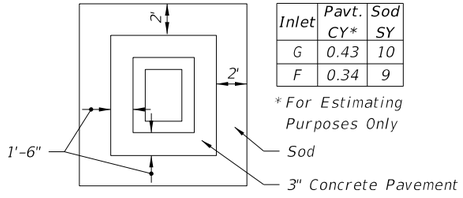

Inlet	Pavt. CY*	Sod SY
G	0.43	10
F	0.34	9

*For Estimating Purposes Only

PAVT. AND SOD

Notes:
1. Pavement and/or sod to be used only where called for in the plans.
2. Cost of paving to be included in cost of inlet.

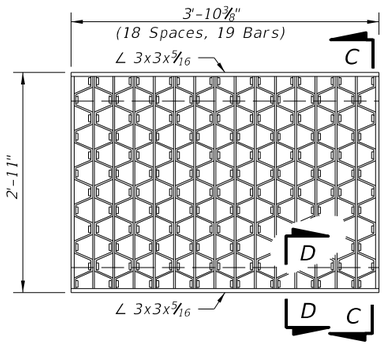

STEEL GRATE

Steel Grating, Straight Bars 3"x¼"
Reticuline Bars 2"x3/16"

TYPE F

HORIZONTAL WALL REINF. SCHEDULES
TYPE F INLET (TABLE 1)

WALL DEPTH	SCHEDULE	AREA (in²/ft)	MAX. SPACING	
			BARS	WWF
0' - 4'	A12	0.20	12"	8"
4' - 7'	A6	0.20	6"	5"
7' - 12'	B5.5	0.24	5½"	5"
12' - 15'	Special 1	0.267	5"	4"

GENERAL NOTES

1. These inlets are designed for use in ditches, medians, pavement areas, or other areas subject to heavy wheel loads, minimal debris, and bicycle traffic. This inlet may be placed in areas subject to occasional pedestrian traffic such as landscaped areas and pavement areas where pedestrians can walk around the inlet. When inlet is placed in areas subject to bicycle traffic, install filler bar when clearance or gap is greater than 1" as shown in Index 218 Inset B.
2. When Alternate G grate is specified in plans, the grate is to be hot dip galvanized after fabrication.
3. These inlets may be used with Alternate B structure bottoms, Index 200. The inlet and bottom combinations are to be paid for under the contract unit price for inlets (DT Bot) (Type F (or G)) (J Bot, Depth), Ea.
4. All exposed edges and corners shall be ¾" chamfer or tooled to ¼" radius.
5. For supplemental details, see Index 201.
6. All reinforcing is Grade 60 bars with 2" min. cover unless otherwise noted. Bars to be cut or bent for 1½" clearance around pipe opening. Provide one additional #4 bar above and at each side of pipe opening, as shown.
7. All dimensions are for both precast and cast-in-place inlets unless otherwise noted.

RECOMMENDED MAXIMUM PIPE SIZES

INLET INSIDE WIDTH	PIPE SIZE
2'-6" (Type F)	18"
4'-0" (Type F)	30"
4'-10" / 5'-0" (Type G)	42"

Note: Recommended sizes are for concrete pipe. Sizes for other types of pipe must be verified for fit in accordance with Index No. 201. For larger pipe sizes see Note 3.

PAVEMENT AND SODDING

6/28/2012 1:53:09 PM rd960rh C:\d*projects\standards\roadway\00200-s\00233-01.dgn

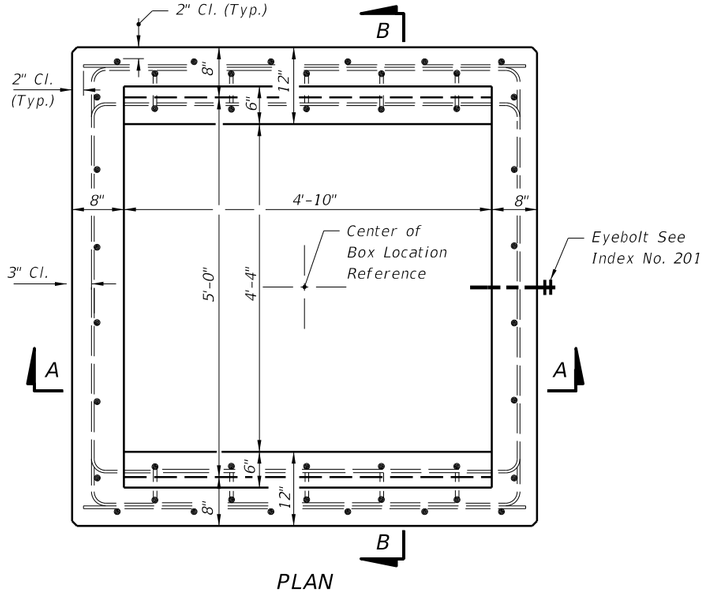

PLAN

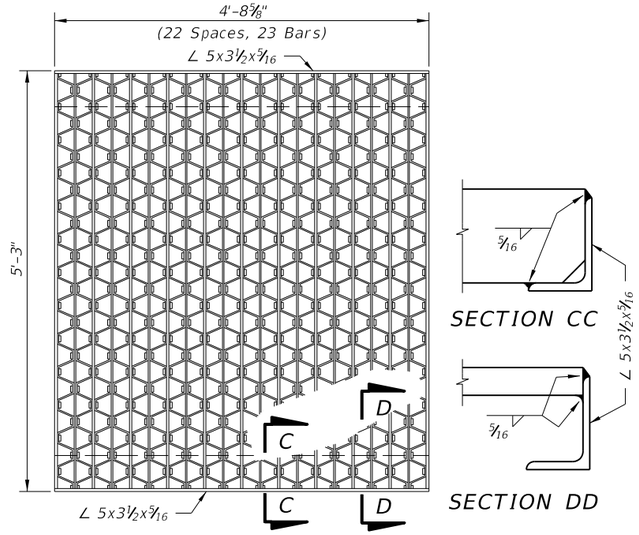

STEEL GRATE

5" Steel Decking, Weight 630 Lbs. Main Bars 5" x ¼"
Intermediate Bars 1½" x¼", Reticuline Bars 1¼" x 3⁄16"

TYPE G INLET (TABLE 2)

WALL DEPTH	SCHEDULE	AREA (in^2/ft)	MAX. SPACING	
			BARS	WWF
0' – 3'	A12	0.20	12"	8"
3' – 7'	A6	0.20	6"	5"
7' – 10'	B5.5	0.24	5½"	5"
10' – 15'	C6.5	0.37	6½"	6"

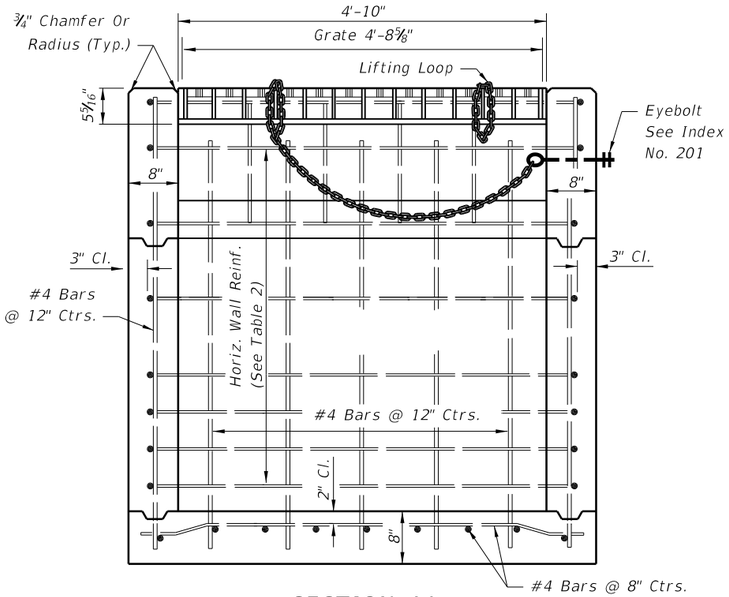

SECTION AA

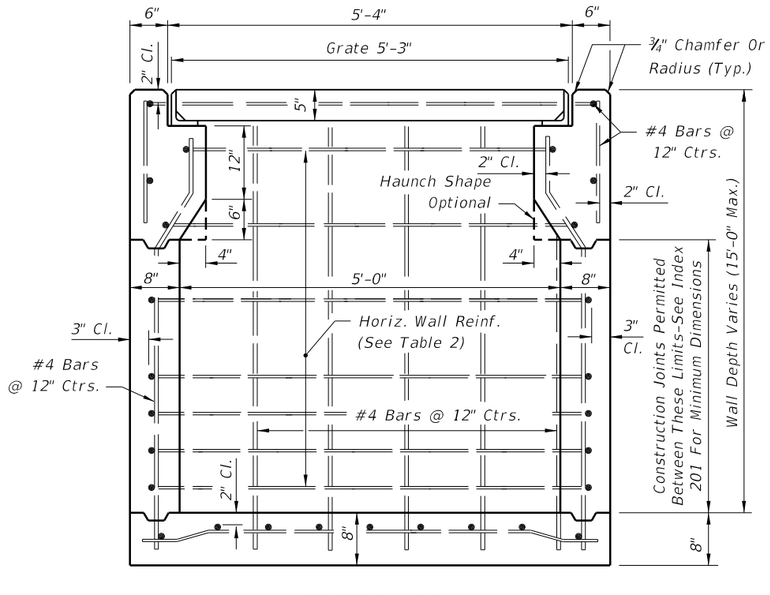

SECTION BB

TYPE G

C:\d\projects\standards\roadway\00200-s\00233-02.dgn
rd960rh
1:53:11 PM
6/28/2012

LAST REVISION	REVISION	DESCRIPTION:		FDOT DESIGN STANDARDS 2013	DITCH BOTTOM INLET TYPES F AND G	INDEX NO.	SHEET NO.
01/01/10						233	2

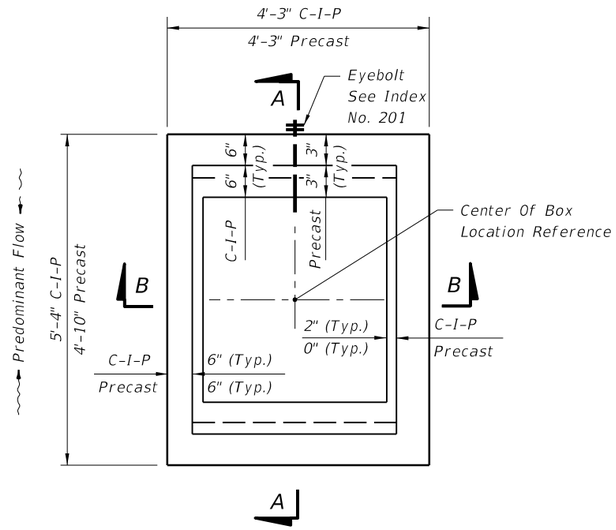

PLAN
(CAST-IN-PLACE INLET SHOWN, WITHOUT GRATE, PRECAST INLET SIMILAR)

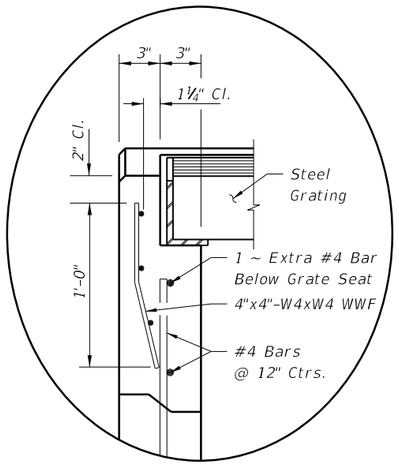

INSET A
(PRECAST OPTION)

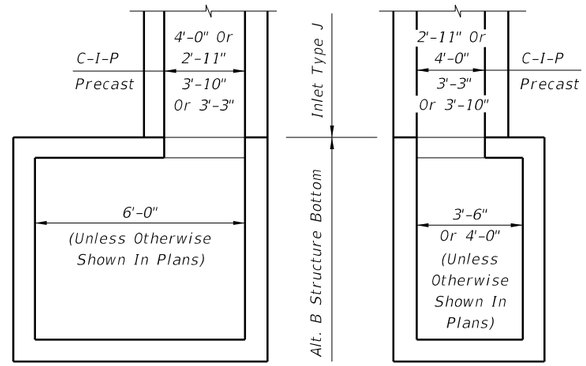

NOTE: Alt. B Structure Bottom Only. See Index No. 200 for structure bottom details and hole reinforcement.

INLET WITH STRUCTURE BOTTOM

HORIZONTAL WALL REINFORCING SCHEDULE (TABLE 1)

WALL DEPTH	SCHEDULE	AREA (In^2/ft)	MAX. SPACING	
			BARS	WWF
0' - 4'	A12	0.20	12"	8"
4' - 9'	A6	0.20	6"	5"
9' - 12'	A4	0.20	4"	3"
9' - 15'	B5.5	0.24	5½"	5"

RECOMMENDED MAXIMUM PIPE SIZES

INLET INSIDE WIDTH	PIPE SIZE
2'-11" or 3'-3"	24"
3'-10" or 4'-0"	30"

Note: Recommended sizes are for concrete pipe. Sizes for other types of pipe must be verified for fit in accordance with Index No. 201. For larger pipe, see Structure Bottom detail above and Index No. 200.

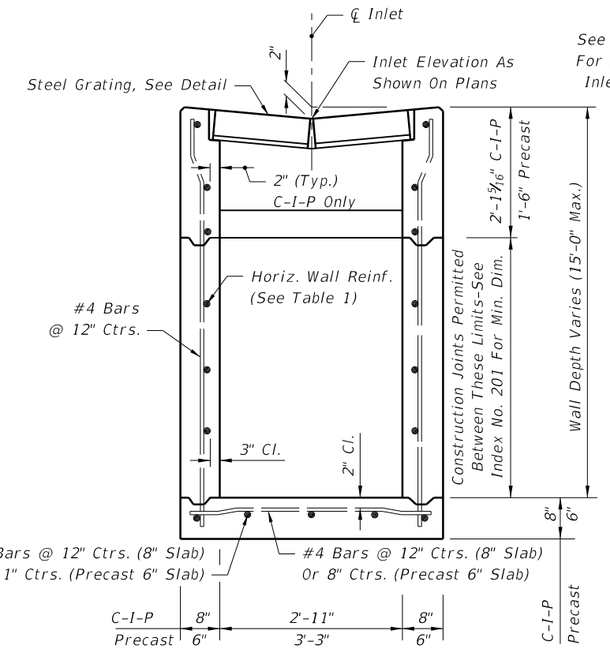

(Pipe Opening Not Shown)
SECTION BB

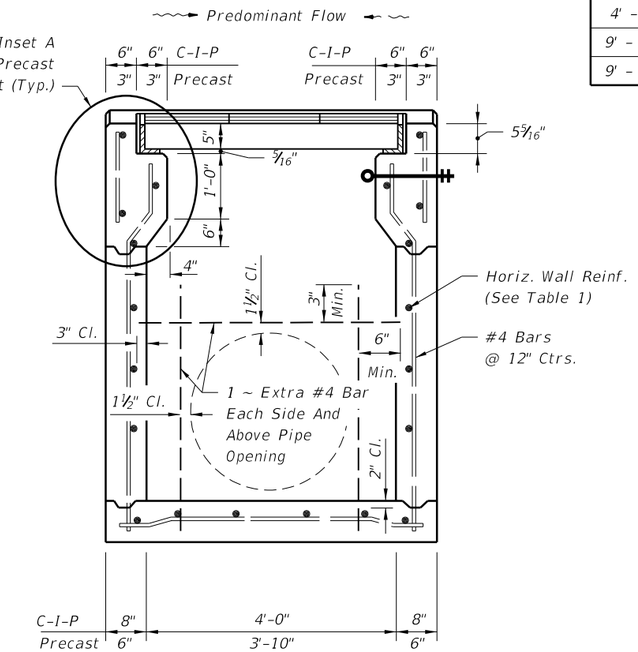

(Pipe Opening Shown)
SECTION AA

GENERAL NOTES

1. This inlet is designed for use in ditches, medians, pavement areas or other areas subject to heavy wheel loads with minimal debris. This inlet is not for use in areas subject to bicycle traffic. This inlet may be placed in areas subject to occasional pedestrian traffic such as landscaped areas and pavement areas where pedestrians can walk around the inlet.
2. All reinforcing Grade 60 bars with 2" min. cover unless otherwise noted. See Index No. 201 for equivalent area of welded wire fabric. Cut or bend bars out of way of pipe when necessary; bars to clear pipe by 1½".
3. All exposed edges and corners shall be ¾" chamfer or tooled to ¼" radius.
4. When alternate G grate is specified in plans the grate is to be hot dip galvanized after fabrication.
5. For supplemental details, see Index No. 201.
6. All dimensions are for both precast and cast-in-place inlets unless otherwise noted.
7. Cost of ditch paving to be included in cost of inlet. Sodding to be paid for under contract unit price for Performance Turf, SY.

6/28/2012 1:53:13 PM rd960rh C:\d\projects\standards\roadway\00200-s\00234-01.dgn

LAST REVISION	REVISION	DESCRIPTION:				
07/01/09			FDOT DESIGN STANDARDS 2013	DITCH BOTTOM INLET TYPE J	INDEX NO. 234	SHEET NO. 1

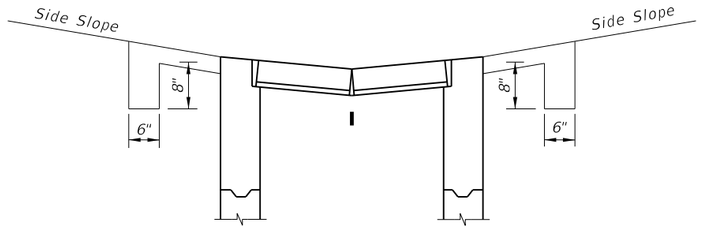

SECTION CC

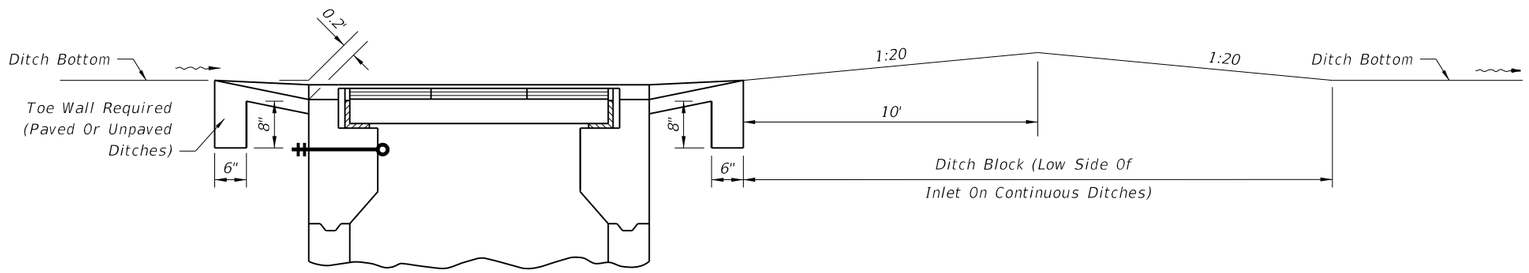

SECTION DD

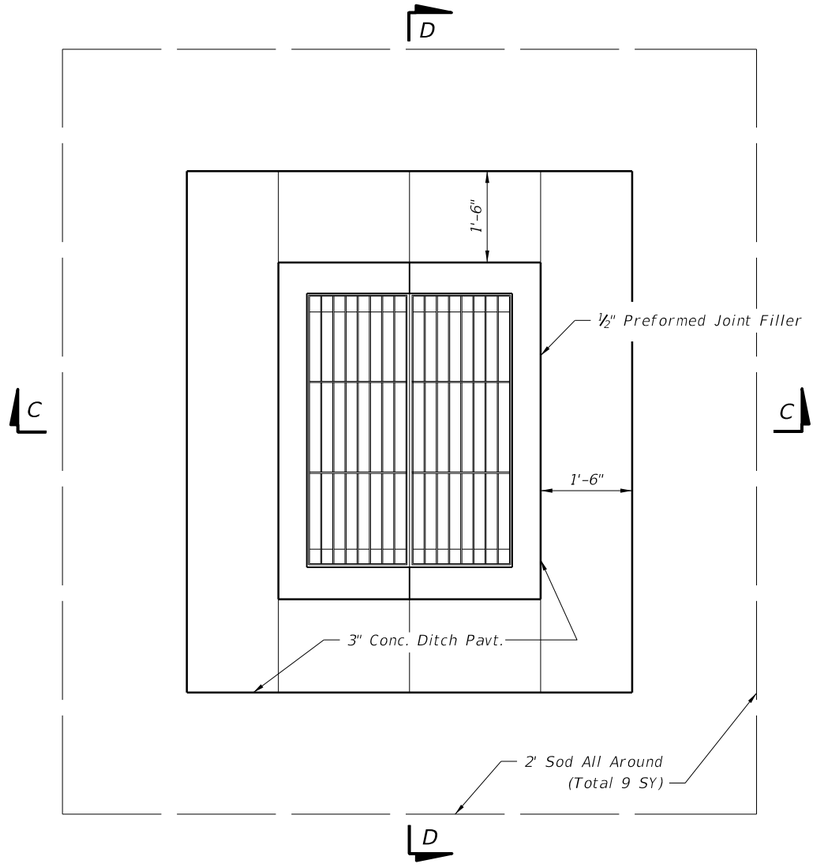

PAVEMENT & SODDING

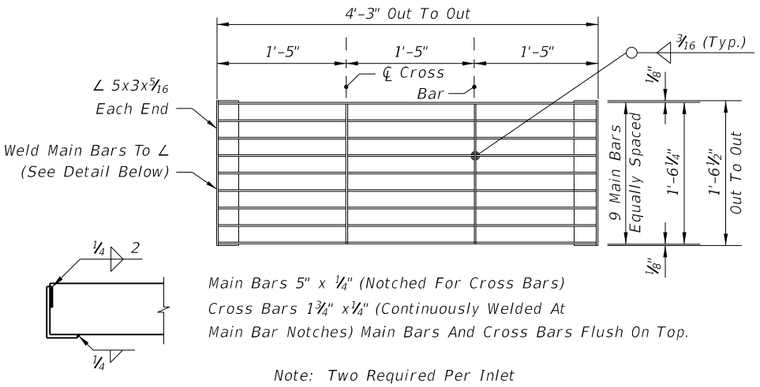

DETAIL

Main Bars 5" x ¼" (Notched For Cross Bars)
Cross Bars 1¾" x¼" (Continuously Welded At
Main Bar Notches) Main Bars And Cross Bars Flush On Top.

Note: Two Required Per Inlet

STEEL GRATING

C:\d\projects\standards\roadway\00200-s\00234-02.dgn
rd960rh
1:53:15 PM
6/28/2012

LAST REVISION	REVISION	DESCRIPTION:		FDOT DESIGN STANDARDS 2013	DITCH BOTTOM INLET TYPE J	INDEX NO.	SHEET NO.
07/01/09						234	2

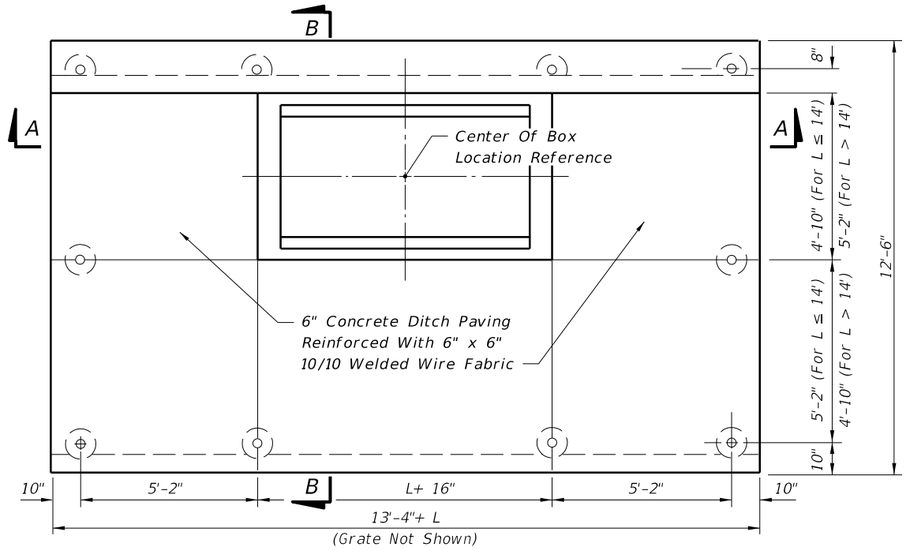

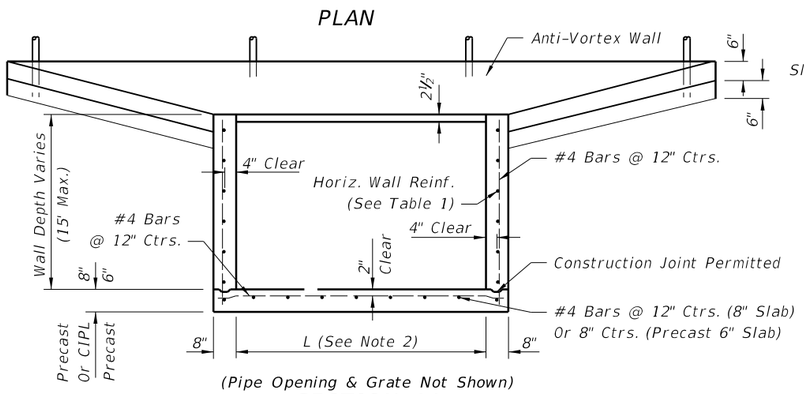

(Pipe Opening & Grate Not Shown)

SECTION AA

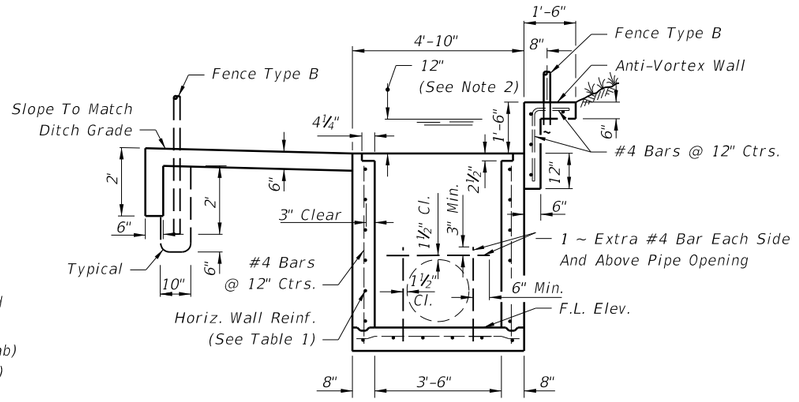

(Pipe Opening Shown, Grate Not Shown)

SECTION BB

INLET LENGTHS (L) LESS THAN OR EQUAL TO 9' (SINGLE LAYER WALL REINFORCING)

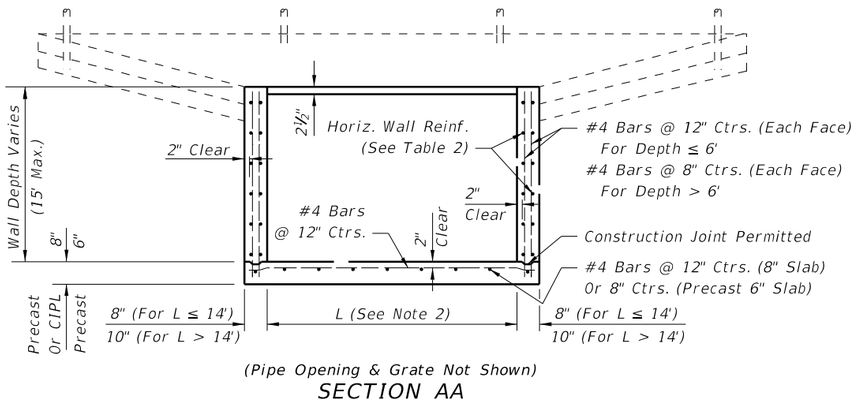

(Pipe Opening & Grate Not Shown)

SECTION AA

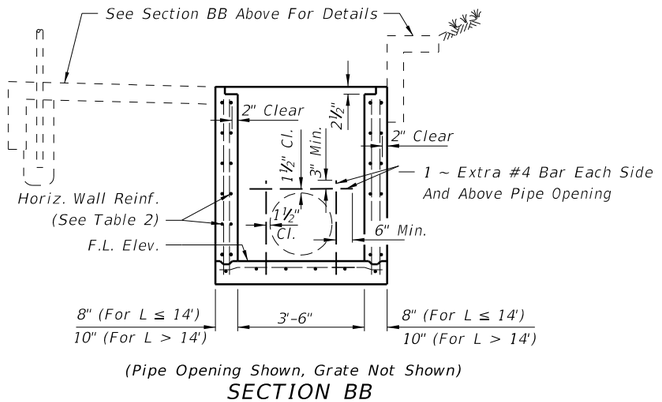

(Pipe Opening Shown, Grate Not Shown)

SECTION BB

INLET LENGTHS (L) GREATER THAN OR EQUAL TO 9' (DOUBLE LAYER WALL REINFORCING)

GENERAL NOTES

1. This inlet is to be used at locations having high flow rates, usually where an endwall could not be utilized without hazardous intake.
2. Inlet length (L) shall be set by the designer for the greater of either culvert requirement or inlet pool not to exceed 12" depth. Structures over 6 feet in depth are to be checked for flotation by the designer of project drainage.
3. This inlet is not intended for use with Index 200 structure bottoms.
4. All exposed edges and corners shall be ¾" chamfer or tooled to ¼" radius.
5. Inlet and anti-vortex wall to be Class II Concrete.
6. All reinforcing is Grade 60 with 2" min. cover unless otherwise noted. See Index No. 201 for equivalent area of welded wire fabric (WWF). Bars to be cut or bent for 1½" clearance around pipe opening. Bend top and corner bars to clear anchor holes.
7. Channel section C 3x6 at 14" max. bar spacing may be used as an alternate for the C 4x5.4 channel at 15" bar spacing.
8. Channels and bars for grate shall be ASTM A242/A242M, A572/A572M or A588/A588M, Grade 50 steel, and galvanized in accordance with Specification Section 975.
9. Fence enclosure shall be Fence Type B (Index No. 802). All posts to be set in concrete. A minimum of 10 posts required. Corner and approach side posts to be 3" nominal diameter.
10. Cost of ditch paving, anti-vortex wall, grate, concrete, reinforcing steel and fence enclosure to be included in the cost of inlet. Inlet to be paid for under the contract unit price for Inlets (DT Bot) (Type K), Each.
11. Anchor Bolts shall be ASTM F1554 Grade 36 fully threaded headless bolts, installed in accordance with Specification Sections 416 and 937. Nuts shall be ASTM A563 or A194 and washers shall be ASTM F436 or Type A plain washers. All nuts, bolts and washers shall be galvanized.

LAST REVISION	REVISION	DESCRIPTION:				
07/01/09			FDOT DESIGN STANDARDS 2013	DITCH BOTTOM INLET TYPE K	INDEX NO. 235	SHEET NO. 1

6/28/2012 1:53:17 PM rd960rh C:\d\projects\standards\roadway\00200-s\00235-01.dgn

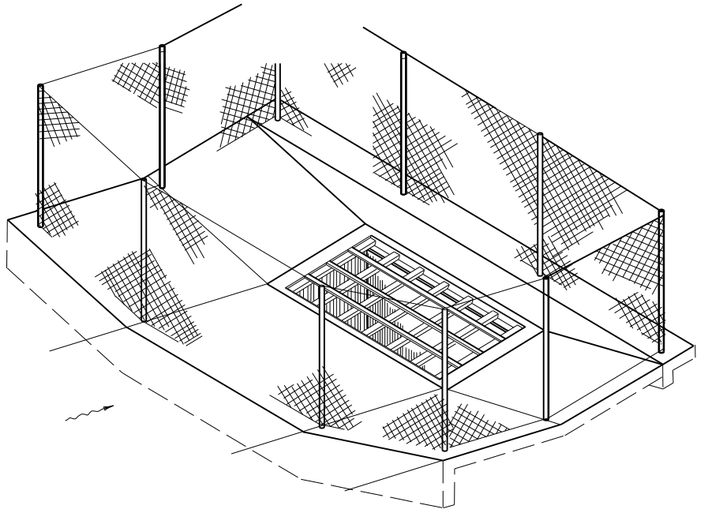

ISOMETRIC OF INLET FENCE ENCLOSURE

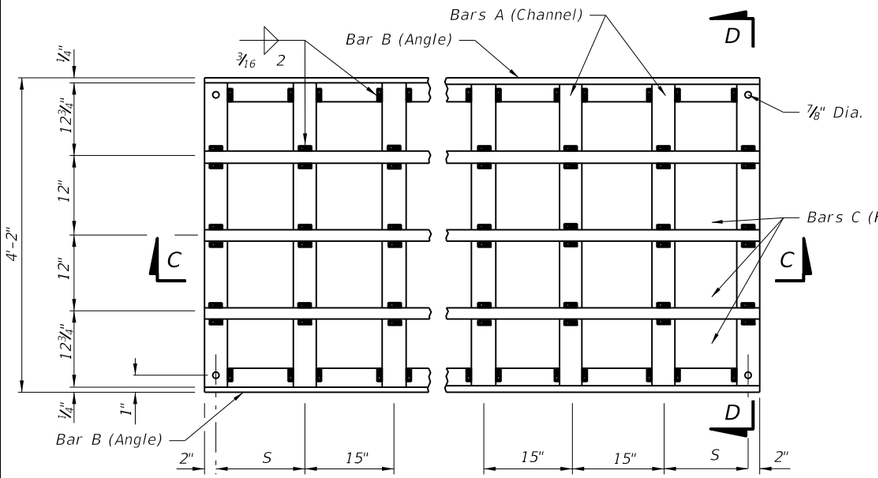

PLAN

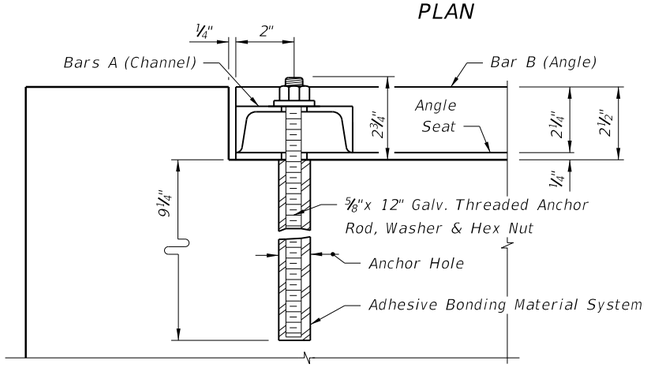

SECTION FF

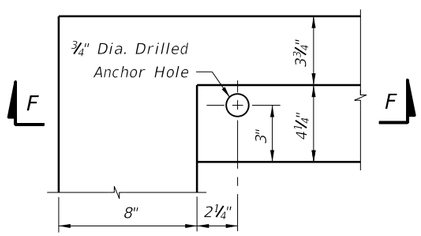

GRATE SEAT AND ANCHOR HOLE PLAN

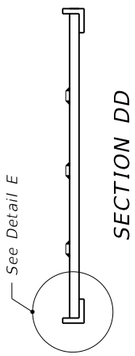

SECTION DD

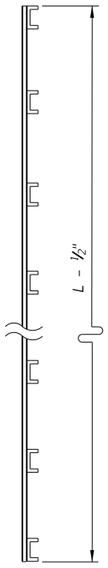

SECTION CC

STEEL GRATE

HORIZONTAL WALL REINFORCING SCHEDULES

WALL DEPTH	SCH.	AREA (in²/ft)	MAX. SPACING BARS	MAX. SPACING WWF
SIZE: L = 5'-0"				
0'-5'	A12	0.20	12"	8"
5'-8'	A6	0.20	6"	5"
8'-15'	B5.5	0.24	5 1/2"	5"
SIZE: L = 6'-0"				
0'-4'	A12	0.20	12"	8"
4'-6'	B5.5	0.24	5 1/2"	5"
6'-9'	C6.5	0.37	6 1/2"	6"
9'-15'	C3.5	0.37	3 1/2"	3"
SIZE: L = 7'-0"				
0'-4'	B5.5	0.24	5 1/2"	5"
4'-7'	C6.5	0.37	6 1/2"	6"
7'-15'	D4.5	0.53	4 1/2"	4"
SIZE: L = 8'-0"				
0'-3'	B5.5	0.24	5 1/2"	5"
3'-5'	C6.5	0.37	6 1/2"	6"
5'-9'	D4.5	0.53	4 1/2"	4"
9'-15'	E5	0.73	5"	4"
SIZE: L = 9'-0"				
0'-4'	C6.5	0.37	6 1/2"	6"
4'-7'	D4.5	0.53	4 1/2"	4"
7'-15'	E3	0.73	3"	3"

SINGLE LAYER REINFORCING (TABLE 1)

WALL DEPTH	SCH.	AREA (in²/ft)	MAX. SPACING BARS	MAX. SPACING WWF
SIZE: L = 9'-0"				
0'-4'	A12	0.20	12"	8"
4'-6'	A6	0.20	6"	5"
6'-8'	B5.5	0.24	5 1/2"	5"
8'-15'	C6.5	0.37	6 1/2"	6"
SIZE: L = 10'-0"				
0'-3'	A12	0.20	12"	8"
3'-5'	A6	0.20	6"	5"
5'-8'	C6.5	0.37	6 1/2"	6"
8'-15'	C3.5	0.37	3 1/2"	3"
SIZE: L = 12'-0"				
0'-4'	B5.5	0.24	5 1/2"	5"
4'-6'	C6.5	0.37	6 1/2"	6"
6'-15'	D4.5	0.53	4 1/2"	4"
SIZE: L = 14'-0"				
0'-4'	C6.5	0.37	6 1/2"	6"
4'-7'	D4.5	0.53	4 1/2"	4"
7'-15'	E5	0.73	5"	4"
SIZE: L = 16'-0" x 10" WALL THICK				
0'-4'	C6.5	0.37	6 1/2"	6"
4'-8'	D4.5	0.53	4 1/2	4"
8'-15'	E5	0.73	5"	4"
SIZE: L = 18'-0" x 10" WALL THICK				
0'-3'	C6.5	0.37	6 1/2"	6"
3'-5'	D4.5	0.53	4 1/2"	4"
5'-8'	E5	0.73	5"	4"
8'-15'	F5	1.06	5"	4"

DOUBLE LAYER REINFORCING (TABLE 2)

GRATE QUANTITIES

PIPE SIZE	L	S	BILL OF STEEL BAR	BILL OF STEEL No. REQD.	BILL OF STEEL LENGTH	STEEL WEIGHT CHANNEL 4"x 5.4 lb	STEEL WEIGHT ANGLE 3"x 2½"x ¼" (4.5 lb/ft)	STEEL WEIGHT FLAT 2" x ½" (3.4 lb/ft)
30"&36"	5'-0"	12 3/4"	A	5	4'-1½"	111		
			B	2	4'-11½"		45	
			C	3	4'-11½"			51
42"&48"	6'-0"	11¼"	A	6	4'-1½"	134		
			B	2	5'-11½"		54	
			C	3	5'-11½"			61
54"&60"	7'-0"	9¾"	A	7	4'-1½"	156		
			B	2	6'-11½"		63	
			C	3	6'-11½"			71
66"&72"	8'-0"	8¼"	A	8	4'-1½"	178		
			B	2	7'-11½"		72	
			C	3	7'-11½"			81
84"	9'-0"	14¼"	A	8	4'-1½"	178		
			B	2	8'-11½"		81	
			C	3	8'-11½"			91
SPECIAL	10'-0"	12 3/4"	A	9	4'-1½"	201		
			B	2	9'-11½"		90	
			C	3	9'-11½"			102
SPECIAL	12'-0"	9¾"	A	11	4'-1½"	245		
			B	2	11'-11½"		108	
			C	3	11'-11½"			122
SPECIAL	14'-0"	14¼"	A	12	4'-1½"	267		
			B	2	13'-11½"		126	
			C	3	13'-11½"			142
SPECIAL	16'-0"	11¼"	A	14	4'-1½"	312		
			B	2	15'-11½"		144	
			C	3	15'-11½"			163
SPECIAL	18'-0"	8¼"	A	16	4'-1½"	356		
			B	2	17'-11½"		162	
			C	3	17'-11½"			183

Table Notes:
See Sheet No. 1 of 2 for dimension "L" location.
See steel grate Plan View for dimension "S" location.

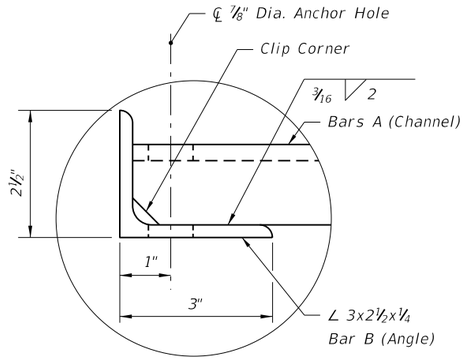

DETAIL E

C:\d\projects\standards\roadway\00200-s\00235-02.dgn rd960rh 1:53:20 PM 6/28/2012

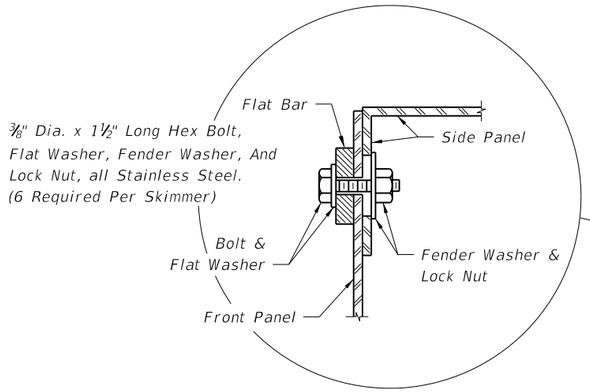

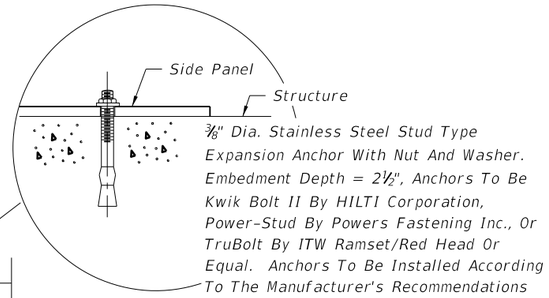

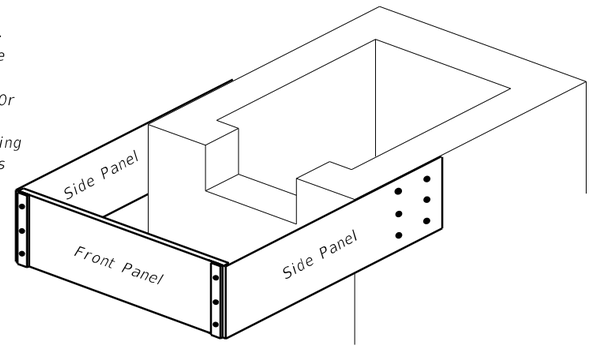

PICTORIAL VIEW

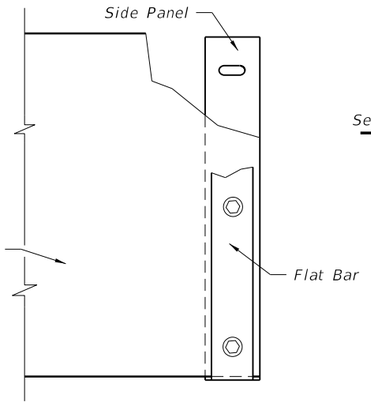

VIEW A

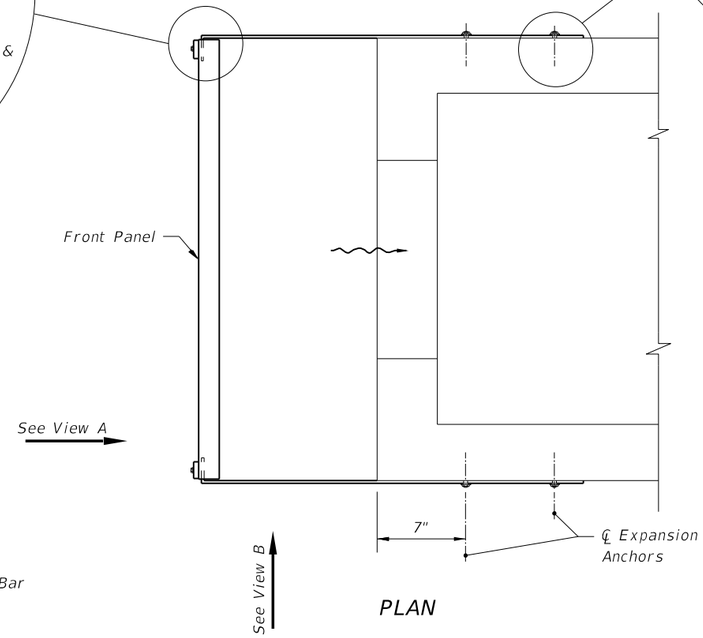

PLAN

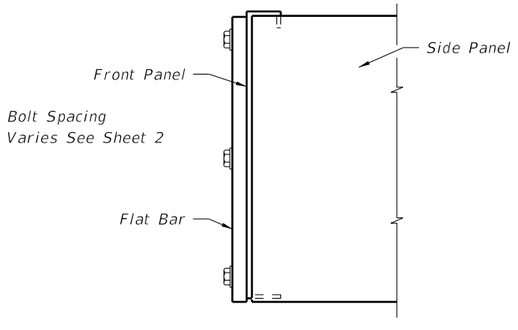

VIEW B

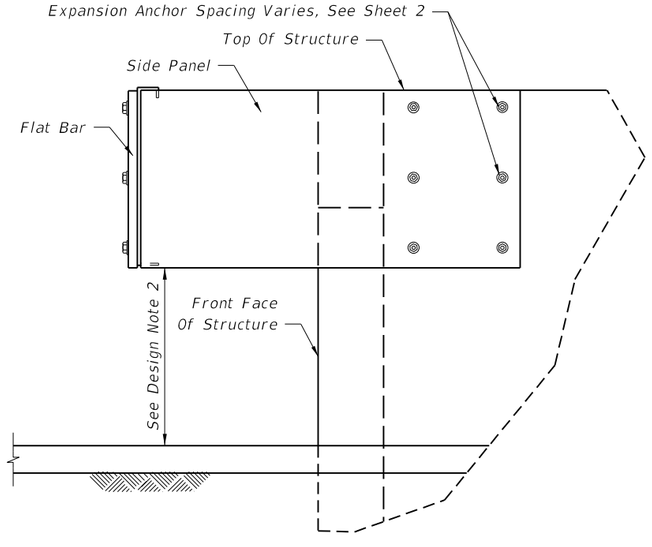

SIDE VIEW

GENERAL NOTES

1. This skimmer is intended for use on Type C, D, or E Ditch Bottom Inlets that are used as outlet control structures of stormwater management facilities.
2. The side panels are dimensionally symmetric, therefore they may be used on either side of the structure.
3. Two (2) skimmers may be constructed on one structure provided they are on opposite ends.
4. The width of the front panel (dimension W) shall be the same as the outside dimension across the front of the structure.
5. The front panel, side panels, and flat bars are to be hot dip galvanized after fabrication.
6. The location of the reinforcing steel in these structures must conform to the applicable standards to avoid conflict with the expansion anchors used to attach the skimmer.
7. Grates to be used on the inlets unless otherwise specified in the plans.
8. A skimmer consists of two (2) side panels, one front panel, two (2) flat bars, and accessory hardware. The cost of skimmers is to be included in the cost of the inlet.

DESIGN NOTES

1. The designer must specify, in the plans, the skimmer height (dimension H) and the sides where the weir slots and skimmers are located. The skimmer height must be one of the dimensions shown in the table on Sheet 2. The skimmer should not be used on structure sides with outside dimensions greater than 6'-4".
2. To minimize hydraulic losses across the skimmer, the flow area under the skimmer should be three times larger than the flow area of the weir slot. The distance between the pond bottom at the structure and the skimmer shall be not less than 1 foot.
3. The configuration of skimmers may be subject to regulatory requirements. The designer should coordinate the outlet control structure details with the permitting agencies.
4. Where this skimmer is used, the designer should reference this index with the outlet control structure details. Where a different skimmer design is needed, the designer should provide skimmer details in the plans.
5. The designer shall evaluate if a grate is needed for safety reasons. Where a grate is not needed for safety reasons and is not desirable for hydraulic or other reasons, the designer may omit the grate by stating so in the outlet control structure details.
6. The designer must show the configuration of the weir slots in the outlet control structure detail.

C:\d*projects\standards\roadway\00200-s\00240-01.dgn rd960rh 1:53:22 PM 6/28/2012

LAST REVISION	REVISION	DESCRIPTION:		FDOT DESIGN STANDARDS 2013	SKIMMER FOR OUTLET CONTROL STRUCTURES	INDEX NO.	SHEET NO.
00						240	1

DIMENSIONS				
Skimmer Height as Specified in the Plans				Bolt Spacing
H	D	E	L	S
Inches				
12	3 3/16	3	28	3
14	3 3/16	3	28	4
16	3 3/16	3	28	5
18	3 3/16	3	28	6
20	4 3/16	4	31	6
22	4 3/16	4	31	7
24	4 3/16	4	31	8
26	4 3/16	4	31	9
28	4 3/16	4	31	10
30	5 3/16	5	31	10
32	5 3/16	5	31	11
34	5 3/16	5	31	12
36	6 3/16	6	31	12
38	6 3/16	6	31	13
40	6 3/16	6	31	14

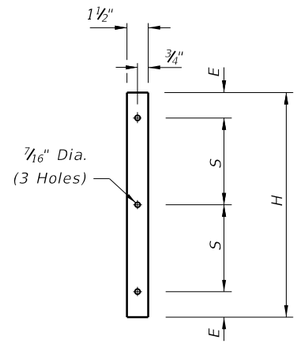

¼" Thick x 1½" Wide

FLAT BAR

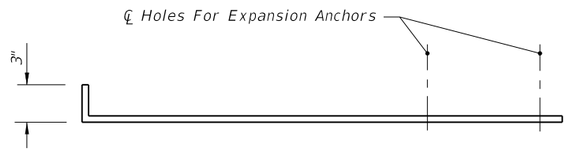

TOP VIEW

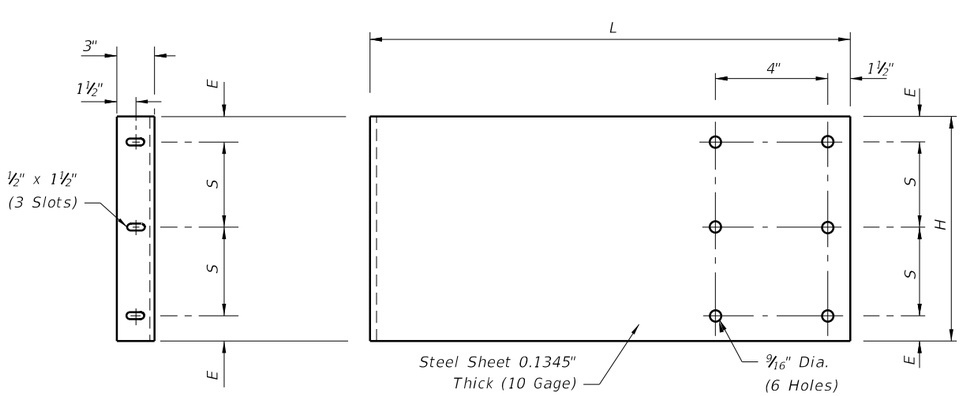

END VIEW (FRONT) SIDE VIEW

SIDE PANEL

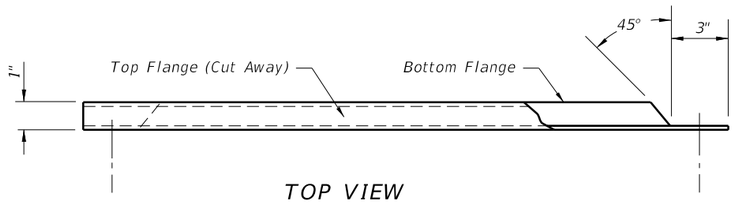

TOP VIEW

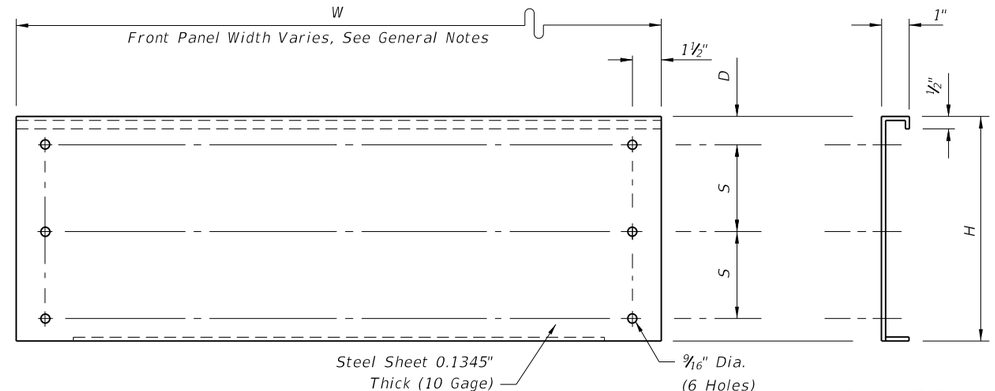

FRONT VIEW END VIEW

FRONT PANEL

C:\d\projects\standards\roadway\00200-s\00240-02.dgn
rd960rh
1:53:24 PM
6/28/2012

LAST REVISION	REVISION	DESCRIPTION:			INDEX NO.	SHEET NO.
01/01/12			FDOT DESIGN STANDARDS 2013	SKIMMER FOR OUTLET CONTROL STRUCTURES	240	2

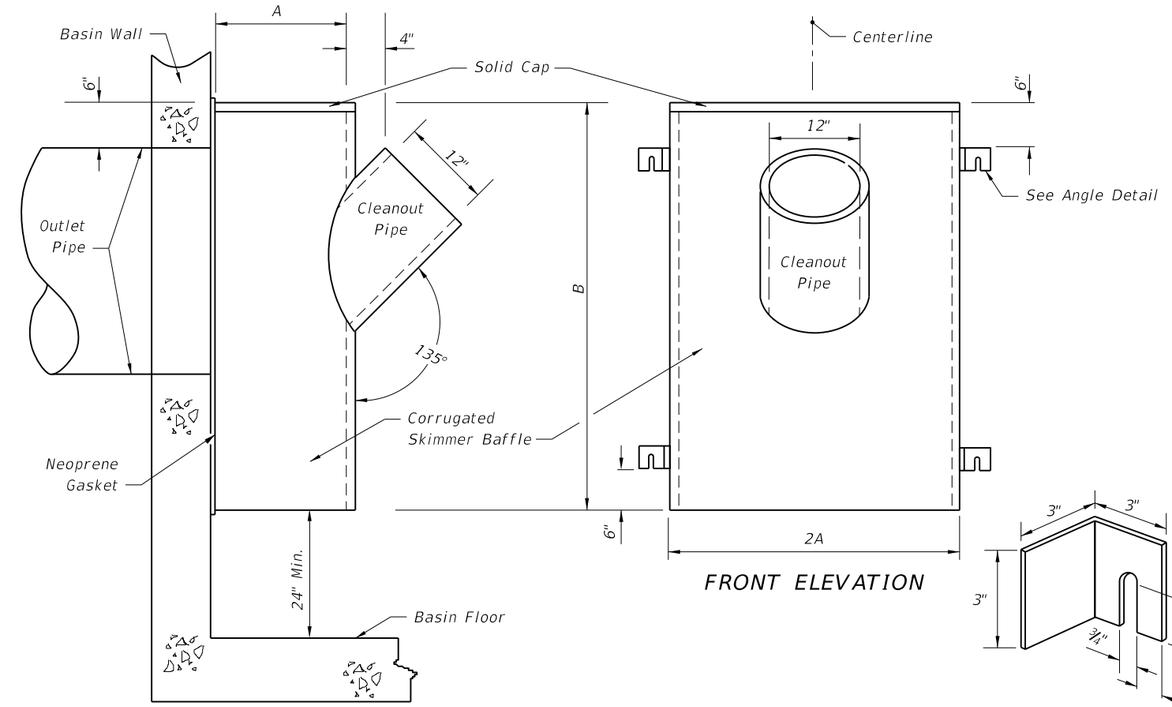

SIDE ELEVATION

FRONT ELEVATION

TYPE I SKIMMER

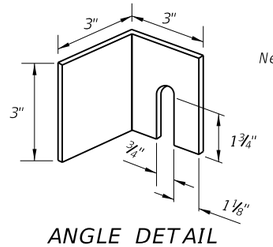

ANGLE DETAIL

Angles on other side of skimmer are mirror image.

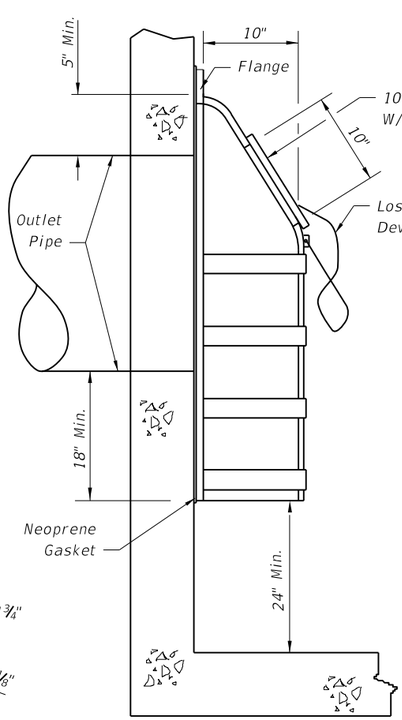

SIDE ELEVATION

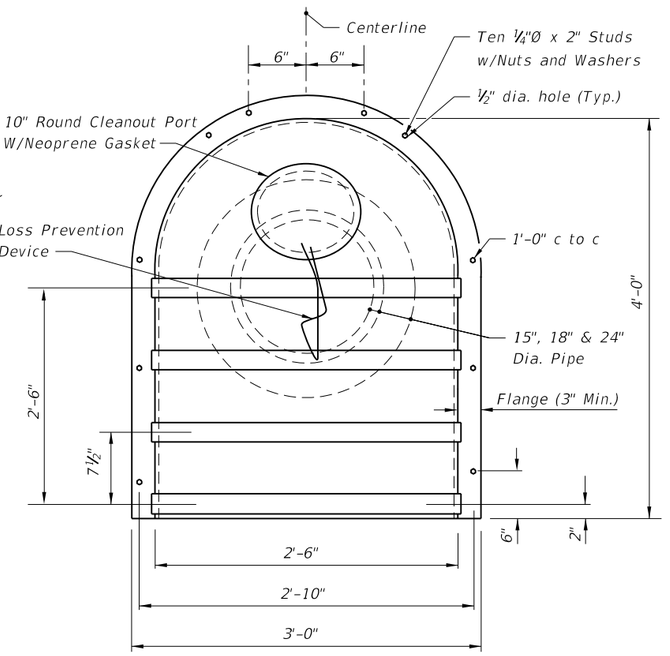

FRONT ELEVATION

Note: The cleanout port for the Type II skimmer shall be gasketed, with either a threaded screw-in lid or a lid secured by four stainless steel quick-release latches.

TYPE II SKIMMER

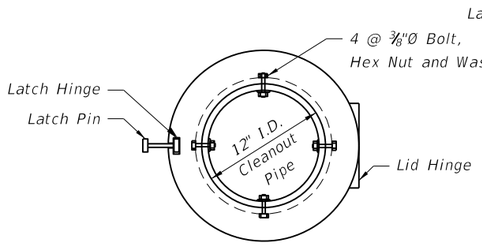

PLAN

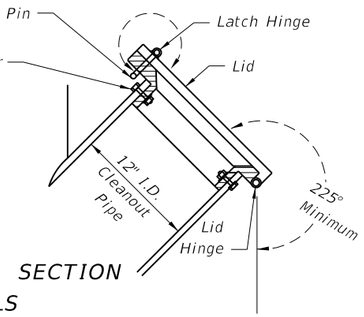

SECTION

LID DETAILS

TYPE I SKIMMER DIMENSION TABLE		
OUTLET PIPE	A	B
18"	12"	42"
24"	15"	48"
30"	18"	54"
36"	21"	60"

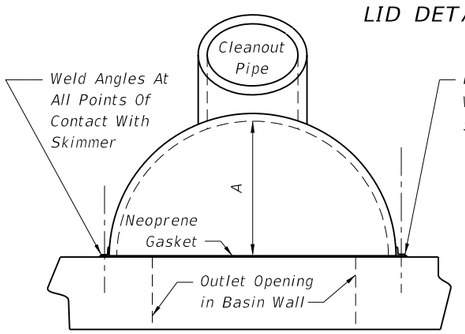

TOP VIEW

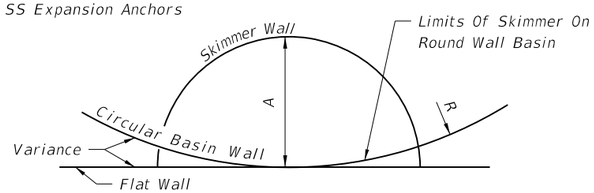

TOP VIEW SCHEMATIC

The backs of skimmers must conform to the shape of the basin walls on which they are mounted. Show, in the plans, the radii required for curved-back skimmers. Applies to both skimmer types.

GENERAL NOTES

1. The Frenchdrain Skimmer is a hooded cover, mounted over an outlet in a catchbasin, that prevents oil and floating debris from exiting the basin. Use this skimmer in Frenchdrain Catchbasins and in other locations where there is a need to prevent oil, debris or other floating contaminants from exiting Catchbasins through outlet pipes.
2. Place neoprene gasket material between the skimmer and the catchbasin at all points of contact. Trim the gasket neatly to extend ½ inch beyond the joint on all sides.
3. Skimmer baffle, cleanout pipe and angles shall be primarily constructed of either galvanized steel, aluminum, polyvinyl chloride, polyethylene, fiberglass or acrylonitrite butadiene styrene. All steel components, other than stainless, shall be hot-dip galvanized.
4. Mounting hardware, hinges and latches shall all be stainless steel. Loss prevention device shall be either stainless steel chain or riveted nylon strap.
5. Material used in construction of skimmer bodies (baffles) and cleanout pipe shall comply with Standard Specification 943 for steel, 945 for aluminum or 948 for plastics.
6. All costs for furnishing and installing a frenchdrain skimmer shall be included in the cost of the basin in which it is installed. Retrofit skimmers shall be paid for as 'modify existing structure'.
7. Plastic Skimmers shall contain a minimum of 1.5% by weight of carbon black for UV protection.

DESIGN NOTES

1. The contractor may submit an alternative design prefabricated Frenchdrain Skimmer for approval by the Engineer.
2. Show, in the plans, the location of the basin and indicate the interior side(s) of the basin on which a skimmer will be installed.
3. Type I Skimmer dimensions shall be based on the outlet pipe diameter as shown in the dimension table.
4. Type II Skimmers are to be used only with outlet pipe diameters of 15", 18", and 24".

C:\d\projects\standards\roadway\00200-s\00241-01.dgn
rd960rh
1:53:26 PM
6/28/2012

LAST REVISION	REVISION	DESCRIPTION:				
04			FDOT DESIGN STANDARDS 2013	SKIMMERS FOR FRENCHDRAIN OUTLETS	INDEX NO. 241	SHEET NO. 1

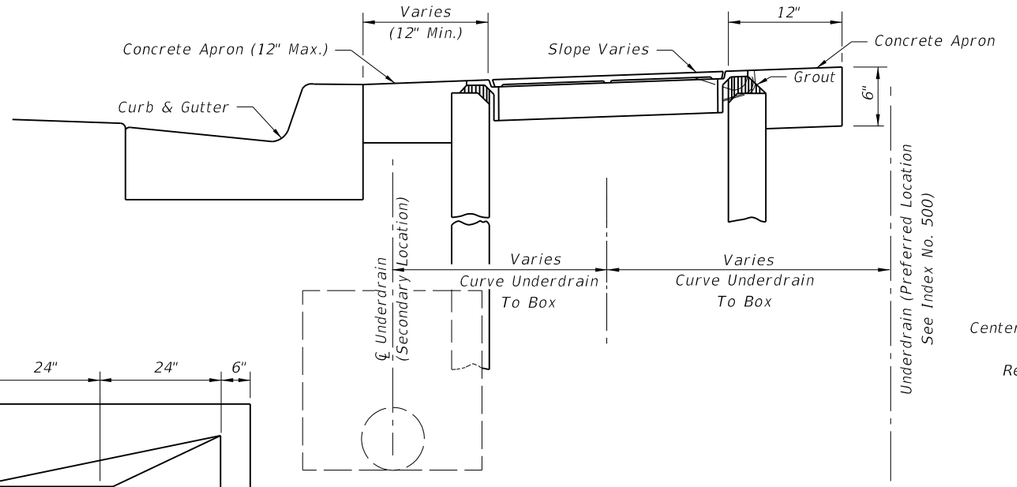

TYPICAL URBAN INSTALLATION

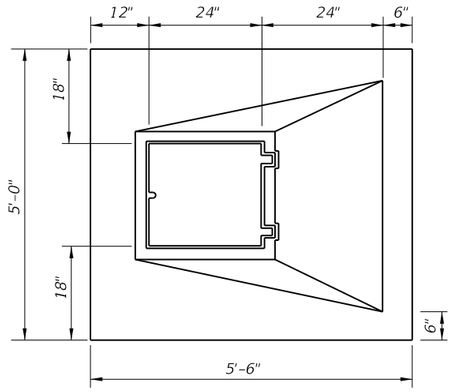

TOP VIEW

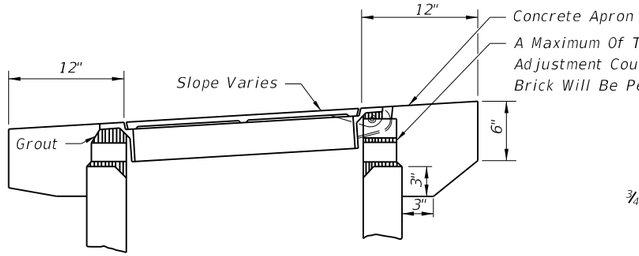

PERMISSIBLE TOP ADJUSTMENT

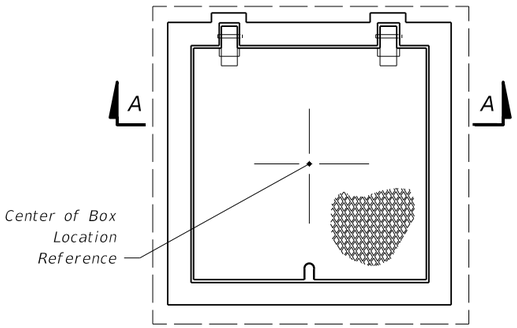

TOP VIEW

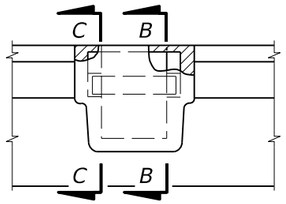

BACK VIEW

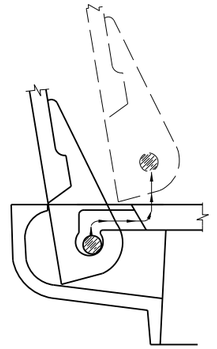

COVER REMOVAL

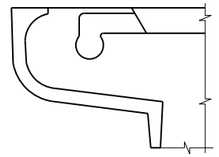

SECTION CC

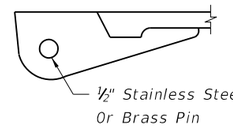

SECTION BB

HINGE DETAIL

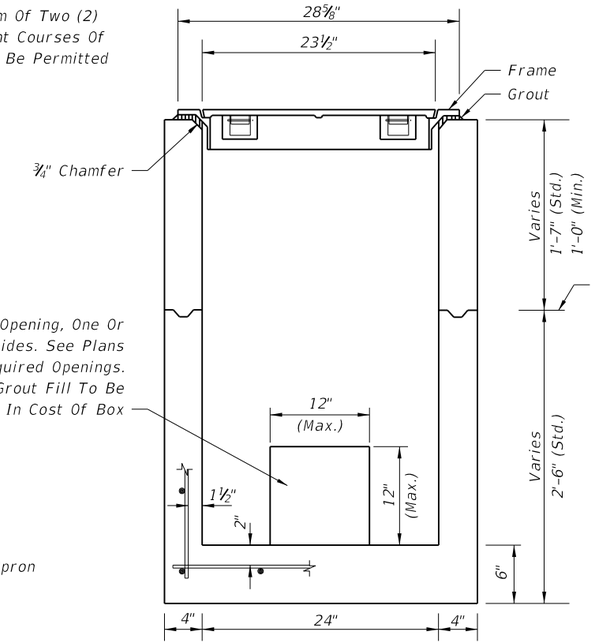

SECTION AA

BOX AND TOP

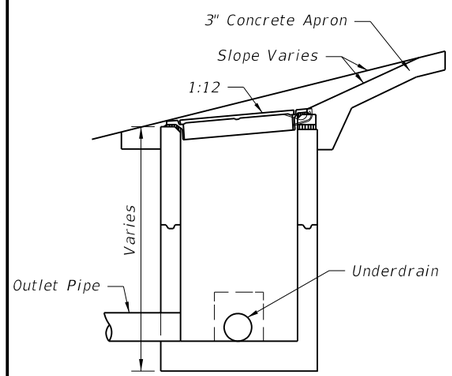

SECTION

TYPICAL INSTALLATION ON SLOPES

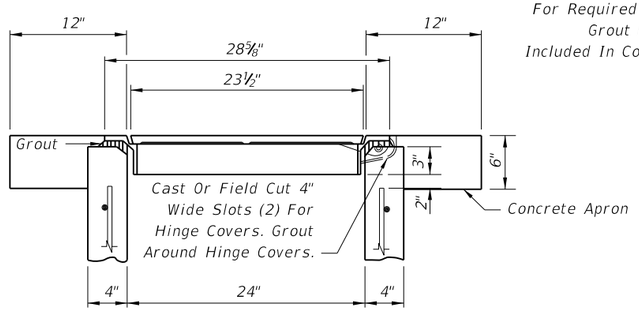

TYPICAL TOP AND APRON

GENERAL NOTES

1. Cast iron cover and frame to be Neenah Foundary Company R-6660-JH, U.S. Foundary & Manufacturing Corporation No. 7640-JK or equal. Neenah R-6660-JH detailed this index.
2. Concrete shall be Class I, except ASTM C478 (4000 psi) concrete may be substituted for precast items manufactured in plants meeting the requirements of Section 449 of the Specifications. Box shall be reinforced with No. 3 bars (Grade 60) on 8" centers both ways, sides and bottom.
3. Concrete apron to be included in the contract unit price for Underdrain Inspection Box.
4. All covers shall be furnished with pick holes. Fitted lifts or handles are not permitted.
5. Manhole Type P Alternate A, Index No. 200, with Type I Frame and Cover, Index No. 201, may be used in lieu of the box detailed on this sheet, and is recommended when high ADT increases chance of the repeated vehicle loadings.

C:\d\projects\standards\roadway\00200-s\00245-01.dgn rd960rh 1:53:28 PM 6/28/2012

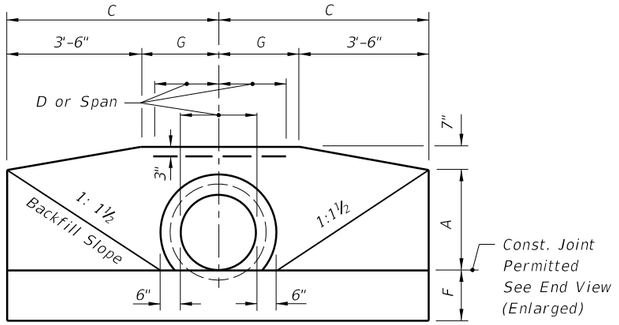

FRONT VIEW

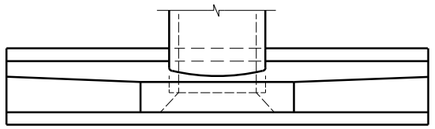

TOP VIEW

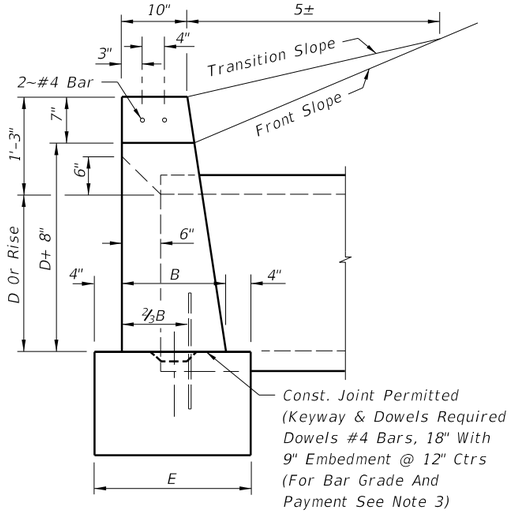

END VIEW (ENLARGED)

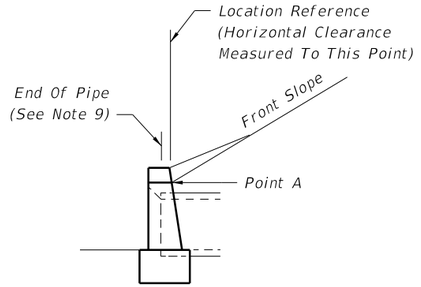

END VIEW

1. Position is set by the intersection of the front slope and Point A where this intersection falls outside the clear zone.

2. Where the front slope and Point A intersects inside the clear zone, the endwall is positioned so the location reference point is at the clear zone limit. The front slope is transitioned to the endwall as shown in Index No. 280.

STANDARD LOCATION CONTROL

ENDWALL DIMENSIONS (EXCLUSIVE OF MULTIPLE PIPE SPACING)

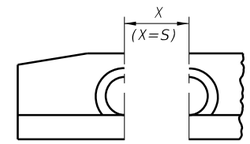

FRONT VIEW

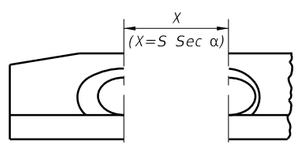

FRONT VIEW

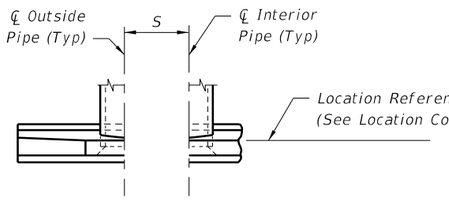

TOP VIEW

NORMAL PIPE

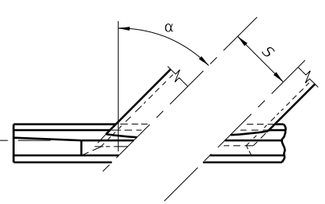

TOP VIEW

SKEWED PIPE

LEGEND

α Pipe Skew
S Center To Center Pipe Spacing
X Centerline To Centerline Dimension At Face Of Headwall

PIPE AND SPACING FOR MULTIPLE PIPE ENDWALL POSITIONS FOR SINGLE AND MULTIPLE

GENERAL NOTES

1. Endwall dimensions, locations and positions are for round and elliptical concrete pipe and for round and pipe-arch corrugated metal pipe. Round concrete pipe shown.

2. Front slope and ditch transitions shall be in accordance with Index No. 280.

3. Endwalls may be cast in place or precast concrete. Reinforcing steel shall be Grades 40 or 60. Additional reinforcement necessary for handling precast units shall be determined by the Contractor or the supplier. Cost of reinforcement shall be included in the contract unit price for Concrete, (Endwalls).

4. All exposed corners and edges of concrete are to be chamfered ¾".

5. Concrete shall be Class I, except ASTM C478 (4000 psi) concrete may be substituted for precast items manufactured in plants meeting the requirements of Section 449 of the Specifications.

6. On outfall ditches with side slopes flatter than 1:1½ provide 20' transitions from the endwall to the flatter side slopes, right of way permitting.

7. For sodding around endwalls see Index No. 281.

8. Payment for concrete quantities for endwalls skewed to the pipe shall be made on the following basis:

Endwall Skew to Pipe	Use Tabulated Value
0° to 5°	0°
6°	15°
16°	30°
31° or over	45°

9. Pipe length plan quantities shall be based on the pipe end locations shown in the standard location control end view, or lengths based on special endwall locations called for in the plans.

10. Payment for pipe in pipe culverts shall be based on plan quantities, adjusted for endwall locations subsequently established by the Engineer.

11. Endwalls to be paid for under the contract unit price for Class I Concrete (Endwalls), CY.

6/28/2012 1:53:30 PM rd960rh C:\d\projects\standards\roadway\00200-s\00250-01.dgn

LAST REVISION	REVISION	DESCRIPTION:		FDOT DESIGN STANDARDS 2013	STRAIGHT CONCRETE ENDWALLS SINGLE AND MULTIPLE PIPE	INDEX NO.	SHEET NO.
07/01/09						250	1

DATA AND ESTIMATED QUANTITIES FOR ONE ENDWALL

ROUND CONCRETE AND CORRUGATED METAL PIPE

D	Opening Area (SF)				Dimensions												Class I Concrete (CY)																				D
																	Number And Type Of Pipe And Skew Angle Of Pipe																				
															Single		Double								Triple								Quadruple								
	Number Of Pipes												X				Conc	Metal	Concrete				Metal				Concrete				Metal				Concrete				Metal				
	1	2	3	4	A	B	C	E	F	G	S	0°	15°	30°	45°	0°	0°	0°	15°	30°	45°	0°	15°	30°	45°	0°	15°	30°	45°	0°	15°	30°	45°	0°	15°	30°	45°	0°	15°	30°	45°	
15"	1.23	2.46	3.69	4.92	1'-11"	1'-2"	4'-0"	1'-10"	1'-2"	0'-6"	2'-7"	2'-7"	2'-8"	3'-0"	3'-8"	1.23	1.24	1.59	1.60	1.65	1.74	1.62	1.63	1.68	1.78	1.94	1.96	2.05	2.23	1.99	2.02	2.11	2.30	2.30	2.34	2.47	2.74	2.37	2.41	2.75	2.84	15"
18"	1.77	3.54	5.31	7.08	2'-2"	1'-3"	4'-6"	1'-11"	1'-3"	1'-0"	2'-10"	2'-10"	2'-11"	3'-3"	4'-0"	1.56	1.59	1.99	2.01	2.06	2.17	2.04	2.06	2.11	2.23	2.43	2.46	2.56	2.79	2.51	2.54	2.65	2.89	2.86	2.91	3.06	3.40	2.96	3.01	3.17	3.53	18"
21"	2.41	4.82	7.23	9.64	2'-5"	1'-4"	5'-0"	2'-0"	1'-4"	1'-6"	3'-2"	3'-2"	3'-3"	3'-8"	4'-6"	1.97																										21"
24"	3.14	6.28	9.42	12.56	2'-8"	1'-4"	5'-6"	2'-0"	1'-4"	2'-0"	3'-5"	3'-5"	3'-6"	3'-11"	4'-10"	2.24	2.29	2.82	2.84	2.91	3.06	2.91	2.93	3.01	3.17	3.39	3.43	3.57	3.87	3.52	3.56	3.71	4.03	3.97	4.03	4.24	4.69	4.14	4.20	4.43	4.91	24"
27"	3.98	7.96	11.94	15.92	2'-11"	1'-5"	6'-0"	2'-1"	1'-5"	2'-6"	3'-10"	3'-10"	4'-0"	4'-5"	5'-5"	2.73																										27"
30"	4.91	9.82	14.73	19.64	3'-2"	1'-6"	6'-6"	2'-2"	1'-6"	3'-0"	4'-3"	4'-3"	4'-5"	4'-11"	6'-0"	3.26	3.34	4.13	4.16	4.26	4.49	4.28	4.31	4.43	4.67	4.98	5.04	5.25	5.69	5.20	5.27	5.49	5.97	5.84	5.93	6.24	6.91	6.13	6.23	6.56	7.29	30"
36"	7.07	14.14	21.21	28.28	3'-8"	1'-8"	7'-6"	2'-4"	1'-8"	4'-0"	5'-1"	5'-1"	5'-3"	5'-10"	7'-2"	4.53	4.64	5.73	5.77	5.92	6.23	5.95	6.00	6.15	6.49	6.92	7.00	7.29	7.91	7.25	7.34	7.65	8.33	8.13	8.26	8.69	9.62	8.57	8.71	9.18	10.20	36"
42"	9.62	19.24	28.86	38.48	4'-2"	1'-10"	8'-6"	2'-6"	2'-0"	5'-0"	6'-0"	6'-0"	6'-3"	6'-11"	8'-6"	6.33	6.49	8.11	8.17	8.39	8.85	8.43	8.50	8.73	9.23	9.90	10.02	10.45	11.38	10.38	10.52	10.98	11.99	11.68	11.87	12.51	13.89	12.32	12.52	13.22	14.73	42"
48"	12.57	25.14	37.71	50.28	4'-8"	2'-1"	9'-6"	2'-9"	2'-0"	6'-0"	6'-9"	6'-9"	7'-0"	7'-10"	9'-7"	8.15	8.38	10.40	10.48	10.75	11.33	10.85	10.94	11.23	11.87	12.64	12.80	13.34	14.50	13.34	13.51	14.11	15.39	14.89	15.13	15.93	17.68	15.82	16.08	16.97	18.90	48"
54"	15.90	31.80	47.70	63.60	5'-2"	2'-6"	10'-6"	3'-2"	2'-3"	7'-0"	7'-8"	7'-8"	7'-11"	8'-10"	10'-10"	11.71	11.77	15.23	15.35	15.78	16.69	15.35	15.48	15.90	16.83	18.77	19.02	19.86	21.69	18.93	19.18	20.04	21.89	22.29	22.66	23.93	26.67	22.51	22.89	24.17	26.96	54"

CORRUGATED METAL PIPE ARCH

Span	Rise	Opening Area (SF)				Dimensions											Class I Concrete (CY)												Span	Rise	Approx. Equiv. Round Pipe
																	Number Of Pipe And Skew Angle Of Pipe														
		Number Of Pipes											X				Single	Double				Triple				Quadruple						
		1	2	3	4	A	B	C	E	F	G	S	0°	15°	30°	45°	0°	0°	15°	30°	45°	0°	15°	30°	45°	0°	15°	30°	45°			
17"	13"	1.1	2.2	3.3	4.4	1'-9"	1'-2"	3'-10"	1'-10"	1'-2"	0'-4"	2'-6"	2'-6"	2'-7"	2'-11"	3'-6"	1.16	1.47	1.48	1.52	1.60	1.78	1.80	1.88	2.04	2.09	2.12	2.23	2.48	17"	13"	15"
21"	15"	1.6	3.2	4.8	6.4	1'-11"	1'-2"	4'-3"	1'-10"	1'-2"	0'-9"	2'-10"	2'-10"	2'-11"	3'-3"	4'-0"	1.33	1.69	1.70	1.75	1.84	2.04	2.06	2.15	2.33	2.40	2.44	2.57	2.84	21"	15"	18"
28"	20"	2.8	5.6	8.4	11.2	2'-4"	1'-3"	5'-2"	1'-11"	1'-3"	1'-8"	3'-5"	3'-5"	3'-6"	3'-11"	4'-10"	1.78	2.31	2.33	2.39	2.53	2.83	2.87	2.99	3.26	3.36	3.42	3.60	4.01	28"	20"	24"
35"	24"	4.3	8.6	12.9	17.2	2'-8"	1'-4"	5'-11½"	2'-0"	1'-4"	2'-5½"	4'-0"	4'-0"	4'-2"	4'-7"	5'-8"	2.34	3.03	3.05	3.14	3.32	3.72	3.77	3.93	4.29	4.40	4.47	4.72	5.25	35"	24"	30"
42"	29"	5.9	11.8	17.7	23.6	3'-1"	1'-5"	6'-10½"	2'-1"	1'-5"	3'-4½"	4'-9"	4'-9"	4'-11"	5'-6"	6'-9"	3.13	4.06	4.09	4.20	4.45	4.99	5.06	5.28	5.76	5.93	6.03	6.36	7.09	42"	29"	36"
49"	33"	8.4	16.8	25.2	33.6	3'-5"	1'-6"	7'-8"	2'-2"	1'-6"	4'-2"	5'-6"	5'-6"	5'-8"	6'-4"	7'-9"	3.83	5.00	5.04	5.18	5.48	6.16	6.24	6.52	7.12	7.32	7.44	7.86	8.76	49"	33"	42"
57"	38"	10.6	21.2	31.8	42.4	3'-10"	1'-7"	8'-7½"	2'-3"	1'-7"	5'-1½"	6'-4"	6'-4"	6'-7"	7'-4"	8'-11"	4.87	6.31	6.36	6.53	6.91	7.74	7.84	8.18	8.93	9.18	9.33	9.85	10.96	57"	38"	48"
64"	43"	13.2	26.4	39.6	52.8	4'-3"	1'-8"	9'-6½"	2'-4"	1'-8"	6'-0½"	7'-1"	7'-1"	7'-4"	8'-2"	10'-0"	5.88	7.64	7.70	7.91	8.37	9.40	9.52	9.94	10.86	11.15	11.33	11.97	13.33	64"	43"	54"
71"	47"	16.9	33.8	50.7	67.6	4'-7"	1'-10"	10'-4"	2'-6"	2'-0"	6'-10"	7'-10"	7'-10"	8'-1"	9'-1"	11'-1"	7.80	10.15	10.23	10.51	11.12	12.49	12.65	13.22	14.43	14.85	15.10	15.94	17.77	71"	47"	60"

CONCRETE ELLIPTICAL PIPE

Rise	Span	Opening Area (SF)				Dimensions											Class I Concrete (CY)												Rise	Span	Approx. Equiv. Round Pipe
																	Number Of Pipe And Skew Angle Of Pipe														
		Number Of Pipes											X				Single	Double				Triple				Quadruple						
		1	2	3	4	A	B	C	E	F	G	S	0°	15°	30°	45°	0°	0°	15°	30°	45°	0°	15°	30°	45°	0°	15°	30°	45°			
12"	18"	1.3	2.6	3.9	5.2	1'-8"	1'-2"	3'-9"	1'-10"	1'-2"	0'-3"	2'-10"	2'-10"	2'-11"	3'-3"	4'-0"	1.09	1.45	1.46	1.51	1.60	1.80	1.82	1.91	2.09	2.16	2.20	2.33	2.60	12"	18"	15"
14"	23"	1.8	3.6	5.4	7.2	1'-10"	1'-3"	4'-2½"	1'-11"	1'-3"	8½"	3'-5"	3'-5"	3'-6"	3'-11"	4'-10"	1.36	1.82	1.84	1.89	2.01	2.29	2.32	2.43	2.68	2.75	2.80	2.97	3.33	14"	23"	18"
19"	30"	3.3	6.6	9.9	13.2	2'-3"	1'-4"	5'-1½"	2'-0"	1'-4"	1'-7½"	4'-2"	4'-2"	4'-4"	4'-10"	5'-11"	1.89	2.55	2.57	2.65	2.82	3.22	3.27	3.43	3.77	3.88	3.95	4.19	4.70	19"	30"	24"
24"	38"	5.1	10.2	15.3	20.4	2'-8"	1'-5"	6'-3"	2'-1"	1'-5"	2'-9"	5'-2"	5'-2"	5'-4"	6'-0"	7'-4"	2.64	3.55	3.58	3.69	3.93	4.48	4.54	4.77	5.24	5.39	5.49	5.82	6.53	24"	38"	30"
29"	45"	7.4	14.8	22.2	29.6	3'-1"	1'-6"	7'-0"	2'-2"	1'-6"	3'-6"	6'-0"	6'-0"	6'-3"	6'-11"	8'-6"	3.32	4.48	4.52	4.66	4.96	5.64	5.72	6.00	6.60	6.80	6.92	7.34	8.24	29"	45"	36"
34"	53"	10.2	20.4	30.6	40.8	3'-6"	1'-7"	7'-11½"	2'-3"	1'-7"	4'-5½"	7'-1"	7'-1"	7'-4"	8'-2"	10'-0"	4.24	5.76	5.81	6.00	6.39	7.29	7.40	7.76	8.55	8.81	8.97	9.52	10.70	34"	53"	42"
38"	60"	12.9	25.8	38.7	51.6	3'-10"	1'-8"	8'-9"	2'-4"	1'-8"	5'-3"	7'-11"	7'-11"	8'-2"	9'-2"	11'-2"	5.22	7.16	7.23	7.46	7.96	9.10	9.24	9.70	10.71	11.05	11.25	11.95	13.46	38"	60"	48"
43"	68"	16.6	33.2	49.8	66.4	4'-3"	1'-10"	9'-8½"	2'-6"	1'-10"	6'-2½"	8'-10"	8'-10"	9'-2"	10'-2"	12'-6"	6.63	9.01	9.09	9.38	10.00	11.39	11.56	12.13	13.36	13.77	14.02	14.88	16.73	43"	68"	54"
48"	76"	20.5	41.0	61.5	82.0	4'-8"	2'-1"	10'-8"	2'-9"	2'-0"	7'-2"	9'-9"	9'-9"	10'-1"	11'-3"	13'-9"	8.66	11.74	11.85	12.22	13.02	14.82	15.04	15.77	17.37	17.91	18.23	19.34	21.74	48"	76"	60"
53"	83"	24.8	49.6	74.4	99.2	5'-1"	2'-6"	11'-7"	3'-2"	2'-6"	8'-1"	10'-7"	10'-7"	10'-11"	12'-3"	15'-0"	12.50	16.98	16.98	17.67	18.83	21.47	21.78	22.86	25.18	25.97	26.44	28.06	31.55	53"	83"	66"
58"	91"	29.5	59.0	88.5	118.0	5'-6"	2'-10"	12'-6½"	3'-6"	2'-10"	9'-0½"	11'-4"	11'-4"	11'-9"	13'-1"	16'-0"	16.46	22.26	22.46	23.16	24.66	28.05	28.46	29.85	32.85	33.85	34.46	36.55	41.05	58"	91"	72"

Note: Use the guidelines of General Note No. 8 for selecting tabular quantities.

C:\d\projects\standards\roadway\00200-s\00250-02.dgn
rd960rh
1:53:33 PM
6/28/2012

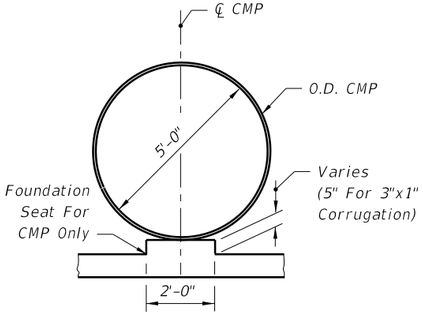

SECTION BB

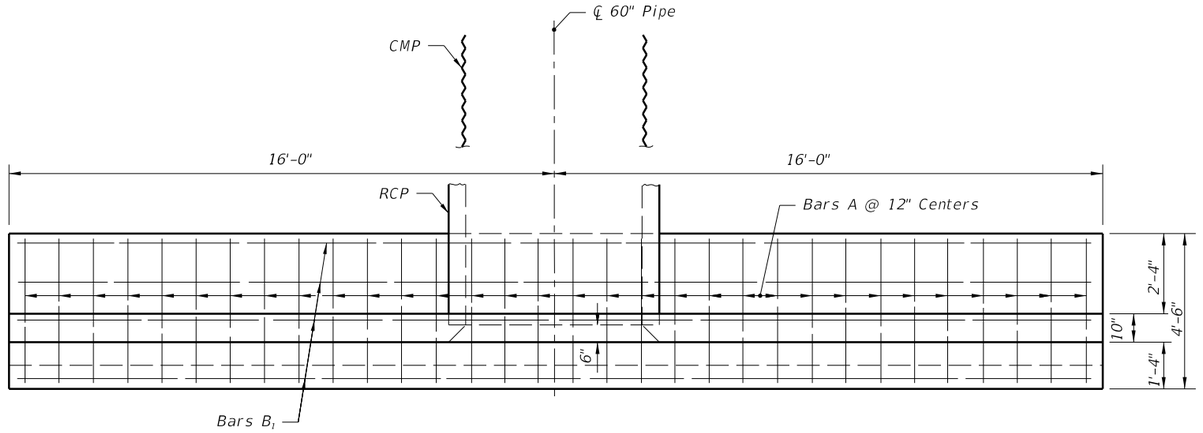

PLAN
(Showing Bar In Footing)

BILL OF REINFORCING STEEL

MARK	SIZE	NO. REQD.	LENGTH	LOCATION	BENDING
A	#4	32	4'-2"	Footing	Straight
B_1	#4	13	31'-8"	Footing & Wall	Straight
B_2	#4	4	12'-4"	Wall	Straight
B_3	#4	4	13'-9"	Wall	Straight
C	#4	26	9'-4"	Wall	Bend
D	#4	18	7'-6"	Wall	Straight
E	#4	8	1'-8"	Footing & Wall	Straight

BENDING DIAGRAM

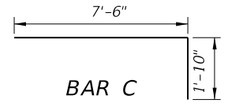

BAR C

NOTE: All bar dimensions are out to out

ESTIMATED QUANTITIES

ITEM	UNIT	RCP	CMP
Class II Concrete	Cu. Yd.	11.3	11.4
Reinforcing Steel	Lb.	695	695

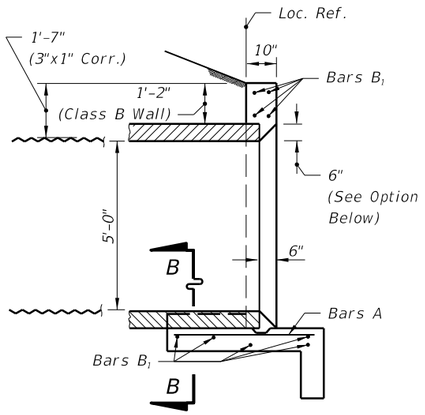

SECTION AA

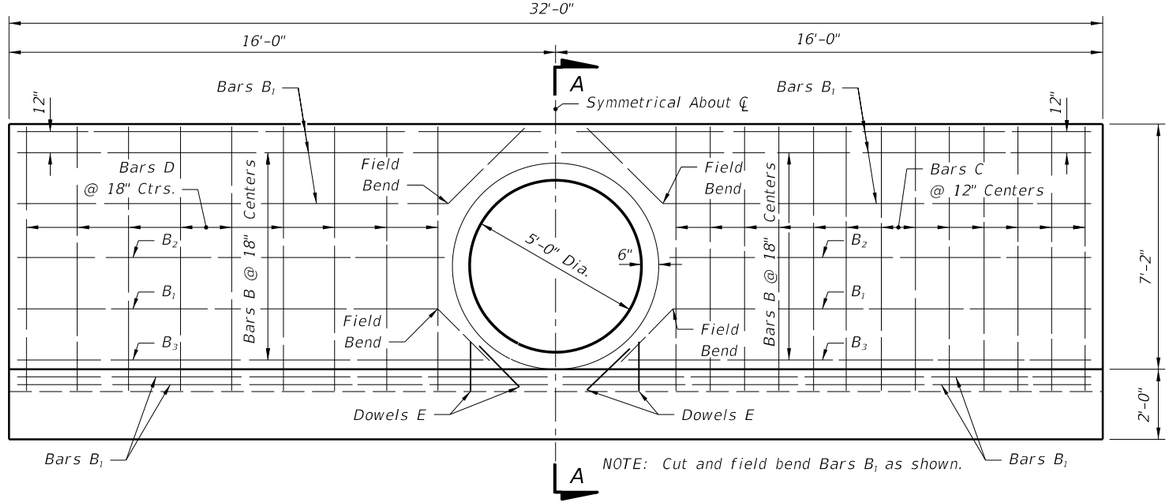

HALF ELEVATION
(Showing Bars In Front Face Of Wall)

HALF ELEVATION
(Showing Bars In Back Face Of Wall)

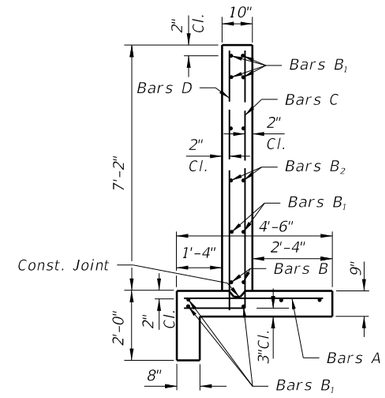

TYPICAL SECTION
THRU ENDWALL

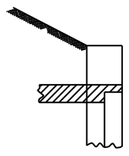

OPTIONAL ENTRANCE
FOR CONCRETE PIPE

GENERAL NOTES

1. Straight concrete endwalls are intended for use outside the clear zone.
2. Endwalls may be cast-in-place or precast construction. Cast-in-place endwalls shall conform to the details on this index, design specifications AASHTO 1989. Precast construction which adheres to this Index, including any additional reinforcement required for handling which shall be determined by the Contractor or supplier, does not require additional approvals. Deviations from this Index, for precast units, shall require the approval of the State Drainage Engineer prior to construction. For precast construction, see Index No. 201 for opening and grouting details.
3. Reinforcing steel shall be either Grade 40 or 60.
4. Concrete shall be Class II, except ASTM C478 (4000 psi) concrete may be substituted for precast items manufactured in plants meeting the requirements of Section 449 of the Specifications.
5. Chamfer: All exposed edges and corners to be chamfered ¾" unless otherwise shown.
6. That portion of corrugated metal pipe in direct contact with the concrete slab and extending 12" beyond shall have a continuous bituminous coating of .004" minimum thickness applied prior to placing of the concrete.
7. Sodding shall be in accordance with Index No. 281 and paid for under the contract unit price for Performance Turf, SY.
8. Basis of payment for either cast-in-place or precast construction shall be the estimated quantities tabulated on the Index. Concrete and reinforcing steel shall be paid for under the contract unit prices for Class II Concrete (Endwalls), CY and Reinforcing Steel (Roadway), LB.

C:\d\projects\standards\roadway\00200-s\00251-01.dgn
rd960rh
1:53:35 PM
6/28/2012

LAST REVISION	REVISION	DESCRIPTION:				
07/01/09			FDOT DESIGN STANDARDS 2013	STRAIGHT CONCRETE ENDWALLS SINGLE AND DOUBLE 60" PIPE	INDEX NO. 251	SHEET NO. 1

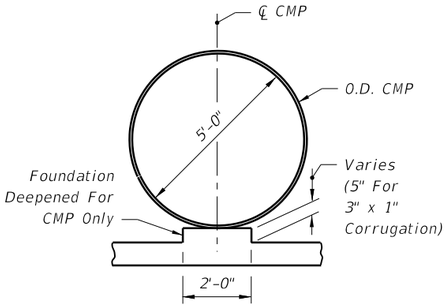

SECTION BB

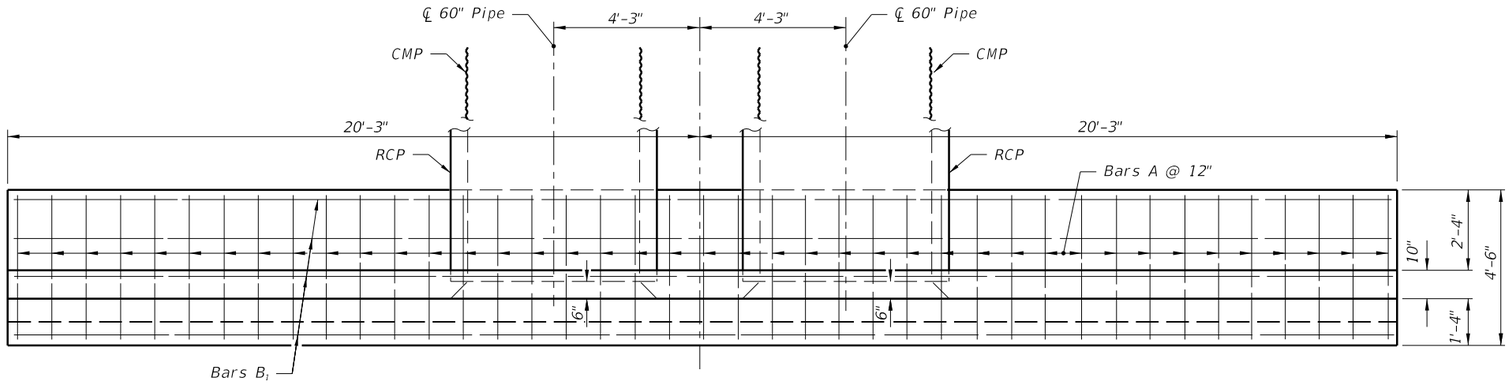

PLAN

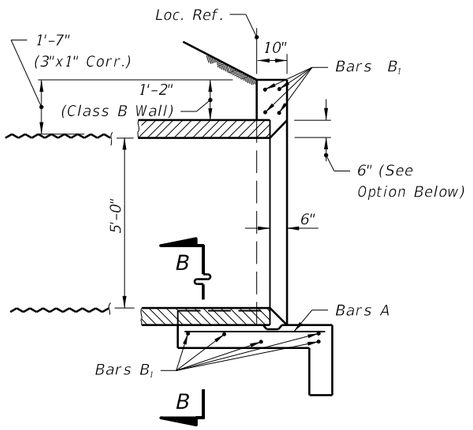

SECTION AA

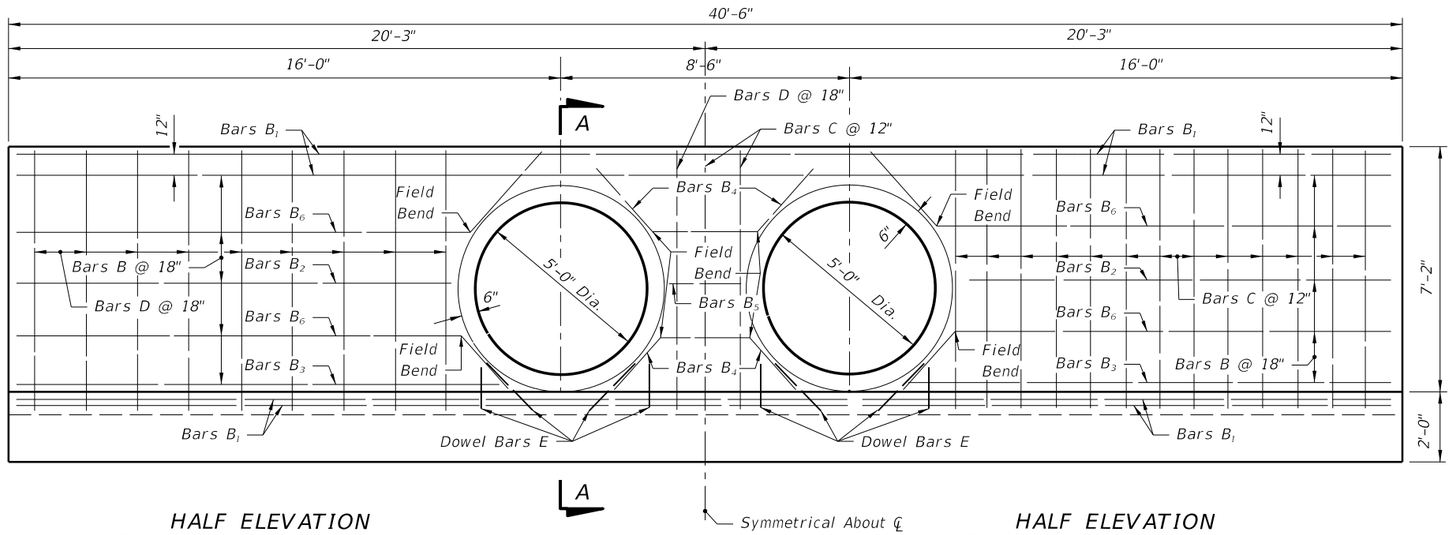

HALF ELEVATION
(Showing Bars In Front Face Of Wall)

HALF ELEVATION
(Showing Bars In Back Face Of Wall)

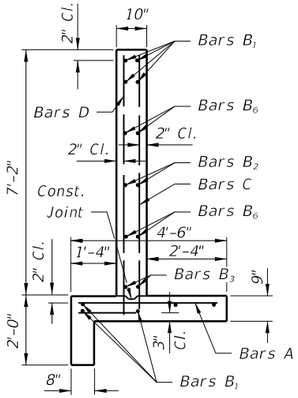

TYPICAL SECTION
THRU ENDWALL

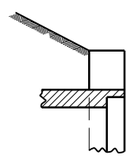

OPTIONAL ENTRANCE
FOR CONCRETE PIPE

BILL OF REINFORCING STEEL

MARK	SIZE	NO. REQD.	LENGTH	LOCATION	BENDING
A	#4	41	4'-2"	Footing	Straight
B_1	#4	9	40'-2"	Footing & Wall	Straight
B_2	#4	4	12'-6"	Wall	Straight
B_3	#4	4	13'-9"	Wall	Straight
B_4	#4	4	6'-0"	Wall	Field Bend
B_5	#4	2	2'-2"	Wall	Straight
B_6	#4	8	15'-0"	Wall	Field Bend
C	#4	29	9'-4"	Footing & Wall	Bend
D	#4	20	7'-6"	Footing & Wall	Straight
E	#4	16	1'-8"	Footing & Wall	Straight

BENDING DIAGRAM

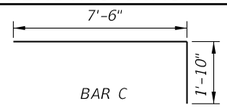

NOTE: All bar dimensions are out to out

ESTIMATED QUANTITIES

ITEM	UNIT	RCP	CMP
Class II Concrete	Cu. Yd.	13.7	13.8
Reinforcing Steel	Lb.	824	824

NOTE: See Sheet 1 of 2 For General Notes.

C:\d\projects\standards\roadway\00200-s\00251-02.dgn
rd960rh
1:53:38 PM
6/28/2012

LAST REVISION	REVISION	DESCRIPTION:			INDEX NO.	SHEET NO.
00			FDOT DESIGN STANDARDS 2013	STRAIGHT CONCRETE ENDWALLS SINGLE AND DOUBLE 60" PIPE	251	2

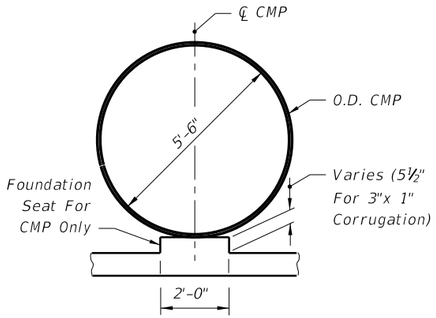

SECTION BB

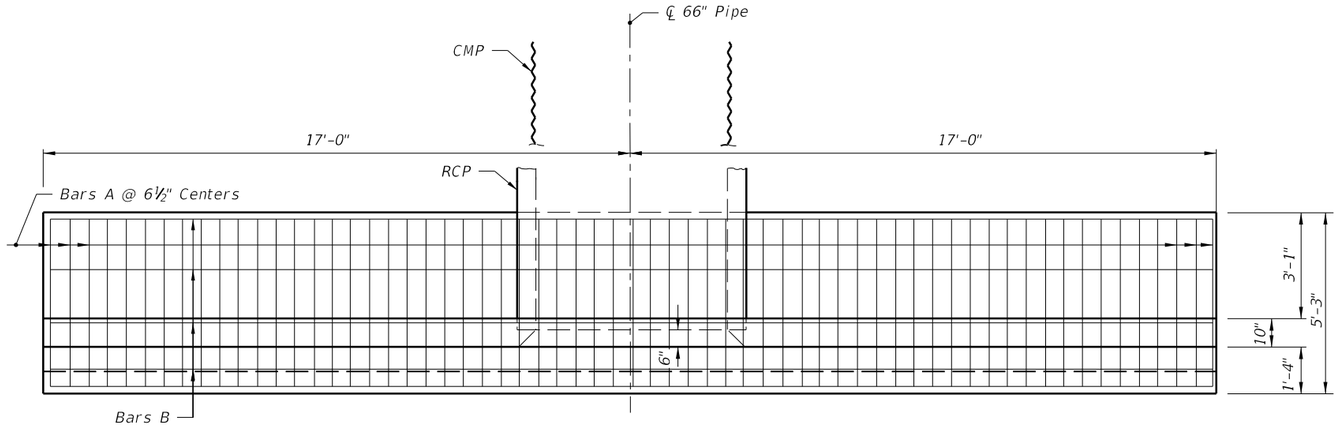

PLAN
(Showing Bars In Footing)

BILL OF REINFORCING STEEL

MARK	SIZE	NO. REQD.	LENGTH	LOCATION	BENDING
A	5	63	4'-11"	Footing	Straight
B	4	17	33'-8"	Footing & Wall	Straight
C	5	34	9'-11"	Wall	Bend
D	4	20	8'-1"	Wall	Straight
E	4	4	1'-8"	Wall	Straight

BENDING DIAGRAM

BAR C

NOTE: All bar dimensions are out to out

ESTIMATED QUANTITIES

ITEM	UNIT	RCP	CMP
Class II Concrete	Cu. Yd.	13.2	13.3
Reinforcing Steel	Lb.	1170	1170

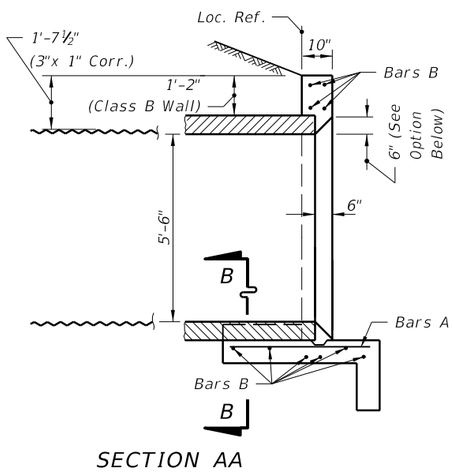

SECTION AA

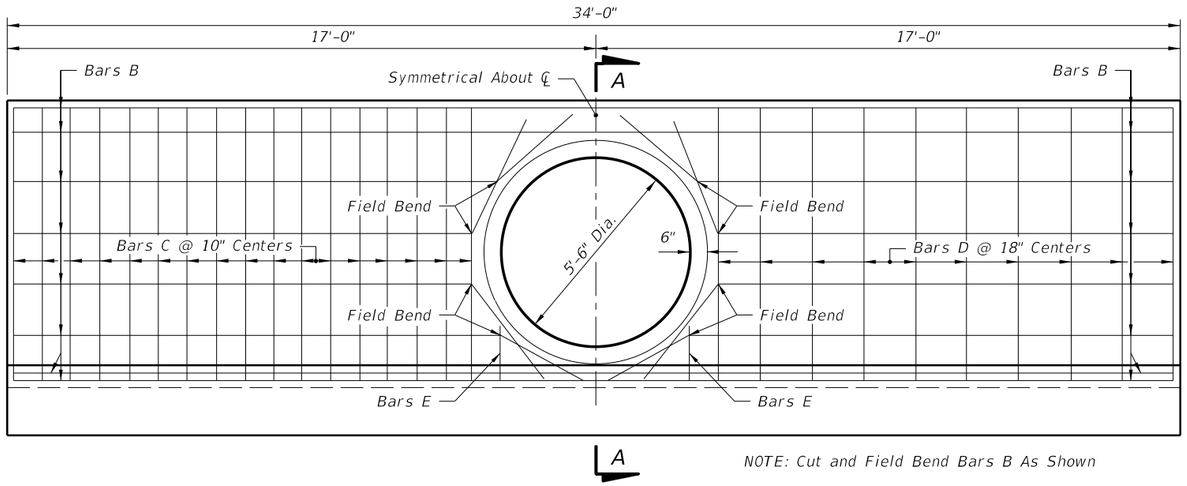

HALF ELEVATION
(Showing Bars In Back Face Of Wall)

NOTE: Cut and Field Bend Bars B As Shown

HALF ELEVATION
(Showing Bars In Front Face Of Wall)

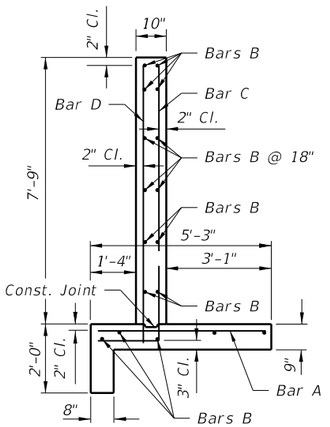

TYPICAL SECTION
THRU ENDWALL

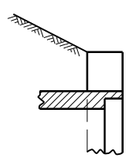

OPTIONAL ENTRANCE
FOR CONCRETE PIPE

GENERAL NOTES

1. Straight concrete endwalls are intended for use outside the clear zone.
2. Endwalls may be cast-in-place or precast construction. Cast-in-place endwalls shall conform to the details on this index, design specifications AASHTO 1989. Precast construction which adheres to this Index, including any additional reinforcement required for handling which shall be determined by the Contractor or supplier, does not require additional approvals. Deviations from this Index, for precast units, shall require the approval of the State Drainage Engineer prior to construction. For precast construction, see Index No. 201 for opening and grouting details.
3. Reinforcing steel shall be either Grade 40 or 60.
4. Concrete shall be Class II except ASTM C478 (4000 psi) concrete may be substituted for precast items manufactured in plants meeting the requirements of Section 449 of the Specifications.
5. Chamfer: All exposed edges and corners to be chamfered ¾" unless otherwise shown.
6. That portion of corrugated Metal pipe in direct contact with the concrete slab and extending 12" beyond shall have a continuous bituminous coating of 0.004" minimum thickness applied prior to placing of the concrete.
7. Sodding shall be in accordance with Index No. 281 and paid for under the contract unit price for Performance Turf, SY.
8. Basis of payment for either cast-in-place or precast construction shall be the estimated quantities tabulated on the Index. Concrete and reinforcing steel shall be paid for under the contract unit prices for Class II Concrete (Endwalls), CY and Reinforcing Steel (Roadway), LB.

C:\d*\projects\standards\roadway\00200-s\00252-01.dgn
rd960rh
1:53:40 PM
6/28/2012

LAST REVISION	REVISION	DESCRIPTION:	FDOT DESIGN STANDARDS 2013	STRAIGHT CONCRETE ENDWALLS SINGLE AND DOUBLE 66" PIPE	INDEX NO.	SHEET NO.
07/01/09					252	1

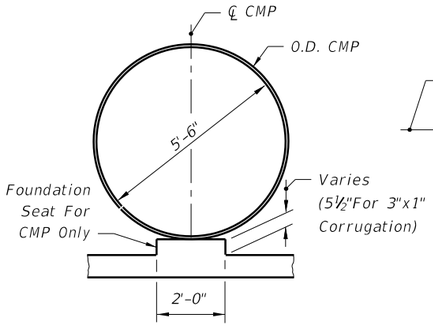

SECTION BB

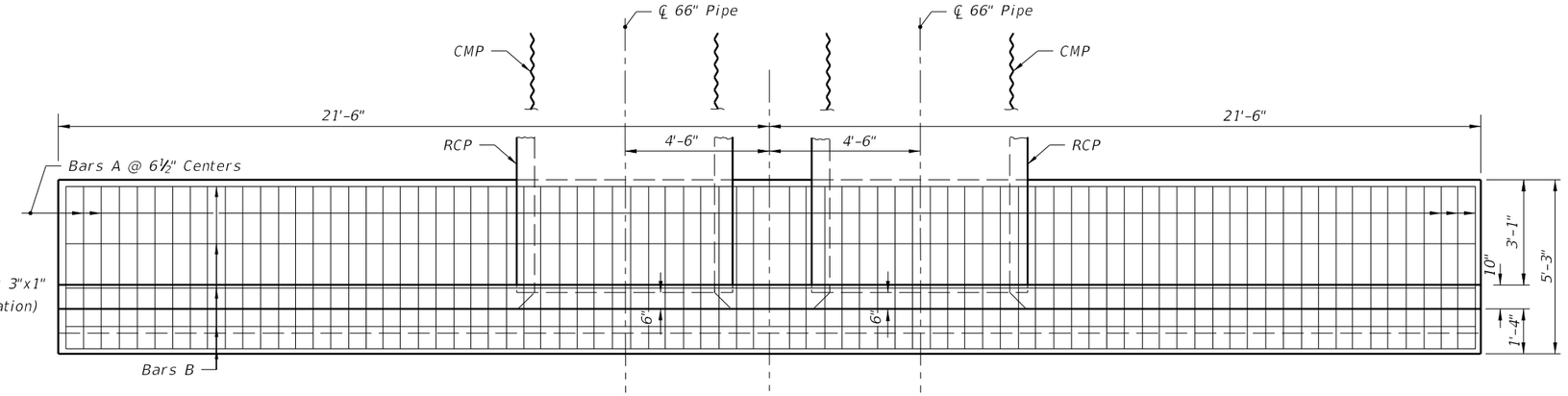

PLAN
(Showing Bars In Footing)

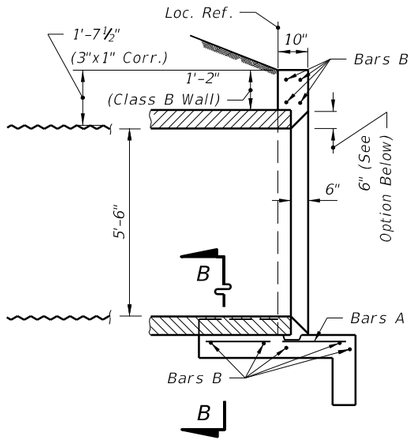

SECTION AA

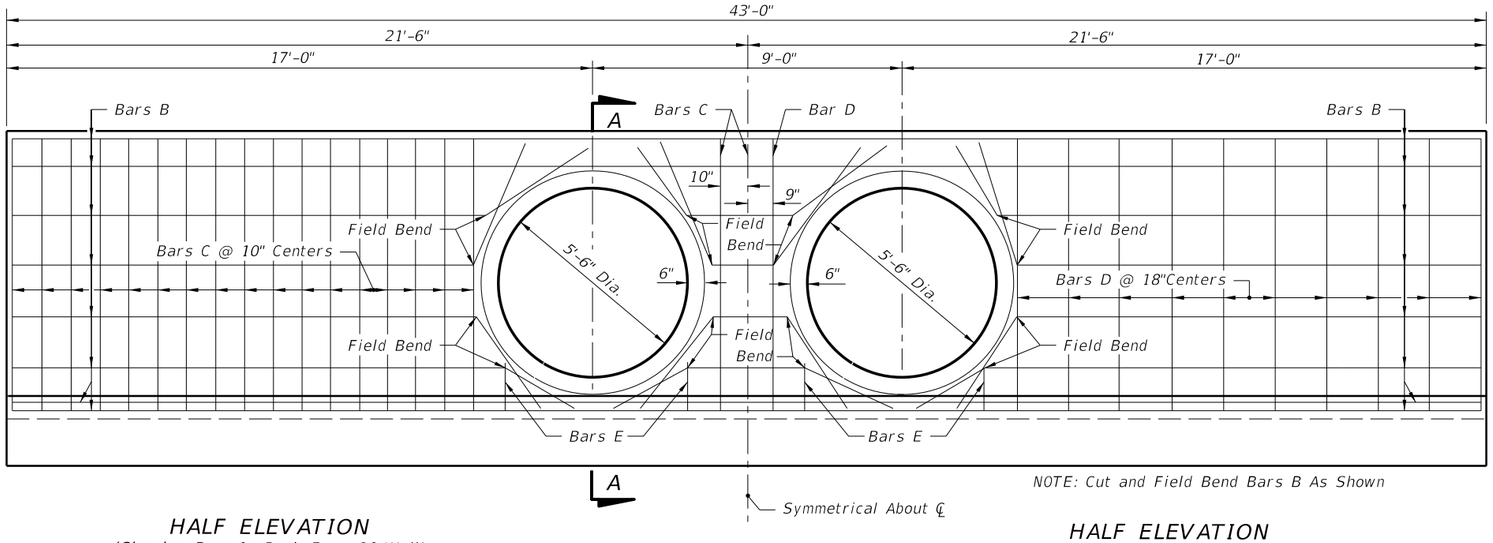

HALF ELEVATION
(Showing Bars In Back Face Of Wall)

NOTE: Cut and Field Bend Bars B As Shown

HALF ELEVATION
(Showing Bars In Front Face Of Wall)

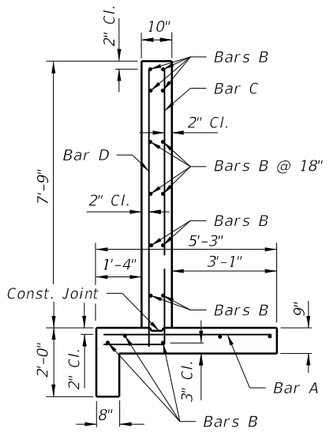

TYPICAL SECTION
THRU ENDWALL

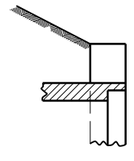

OPTIONAL ENTRANCE
FOR CONCRETE PIPE

BILL OF REINFORCING STEEL

MARK	SIZE	NO. REQD.	LENGTH	LOCATION	BENDING
A	5	80	4'-11"	Footing	Straight
B	4	17	42'-8"	Footing & Wall	Straight
C	5	37	9'-11"	Wall	Bend
D	4	22	8'-1"	Wall	Straight
E	4	8	1'-8"	Wall	Straight

BENDING DIAGRAMS

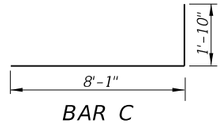

BAR C

Note: All bar dimensions are out to out

ESTIMATED QUANTITIES

ITEM	UNIT	RCP	CMP
Class II Concrete	Cu. Yd.	16.0	16.2
Reinforcing Steel	Lb.	1,406	1,406

NOTE: See Sheet 1 of 2 for General Notes.

C:\d\projects\standards\roadway\00200-s\00252-02.dgn rd960rh 1:53:42 PM 6/28/2012

LAST REVISION	REVISION	DESCRIPTION:				
00			FDOT DESIGN STANDARDS 2013	STRAIGHT CONCRETE ENDWALLS SINGLE AND DOUBLE 66" PIPE	INDEX NO. 252	SHEET NO. 2

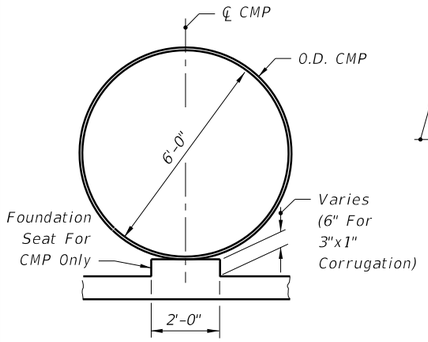

SECTION BB

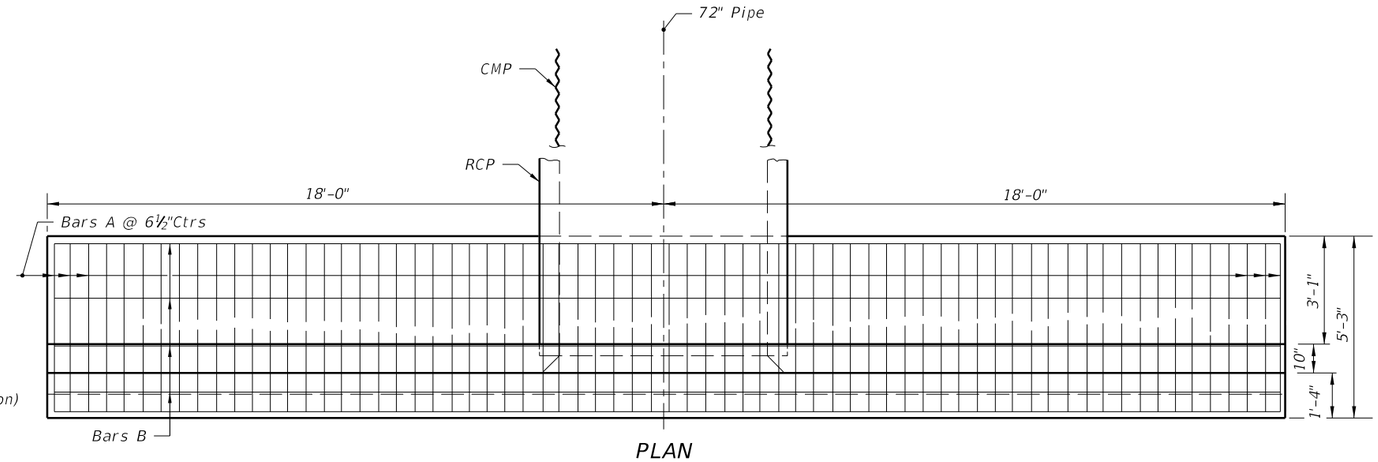

PLAN
(Showing Bars In Footing)

BILL OF REINFORCING STEEL

MARK	SIZE	NO. REQD.	LENGTH	LOCATION	BENDING
A	5	68	4'-11"	Footing	Straight
B	4	17	35'-8"	Footing & Wall	Straight
C	5	34	10'-5"	Wall	Bend
D	4	20	8'-7"	Wall	Straight
E	4	4	2'-6"	Wall	Straight
F	4	4	1'-6"	Wall	Straight

BENDING DIAGRAM

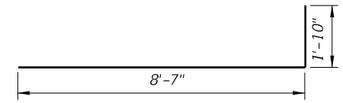

BAR C

NOTE: All bar dimensions are out to out

ESTIMATED QUANTITIES

ITEM	UNIT	RCP	CMP
Class II Concrete	Cu. Yd.	14.4	14.5
Reinforcing Steel	Lb.	1249	1249

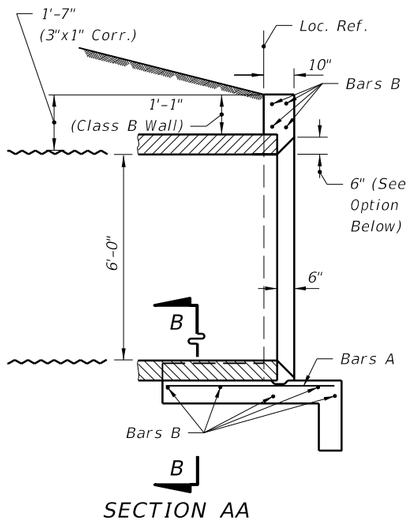

SECTION AA

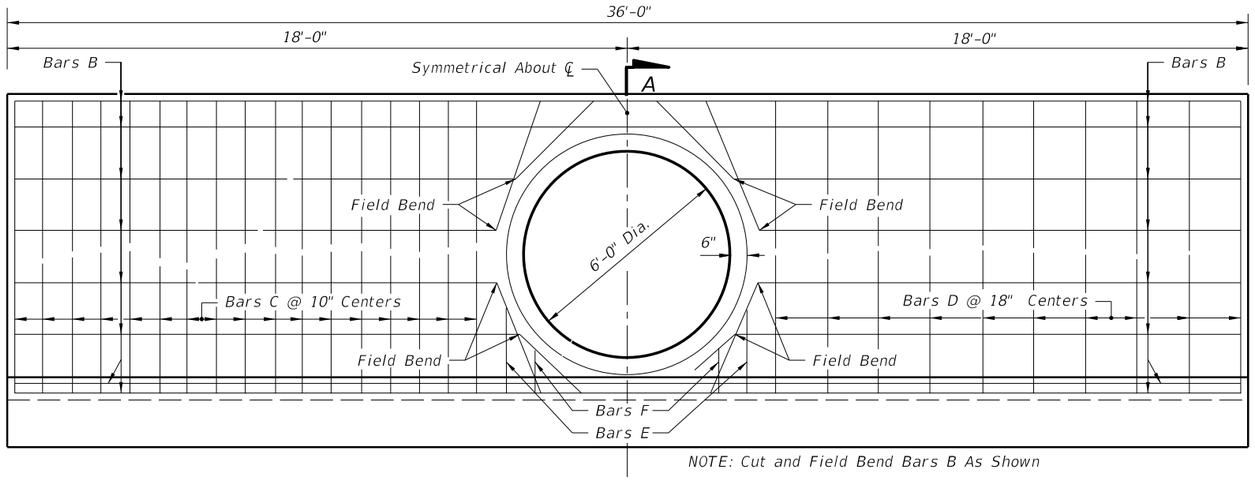

NOTE: Cut and Field Bend Bars B As Shown

HALF ELEVATION
(Showing Bars In Back Face Of Wall)

A

HALF ELEVATION
(Showing Bars In Front Face Of Wall)

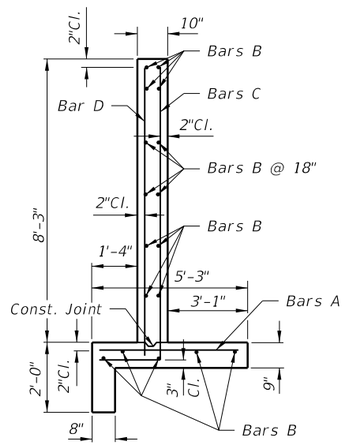

TYPICAL SECTION
THRU ENDWALL

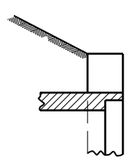

OPTIONAL ENTRANCE
FOR CONCRETE PIPE

GENERAL NOTES

1. Straight concrete endwalls are intended for use outside the clear zone.
2. Endwalls may be cast-in-place or precast construction. Cast-in-place endwalls shall conform to the details on this index, design specifications AASHTO 1989. Precast construction which adheres to this Index, including any additional reinforcement required for handling which shall be determined by the Contractor or supplier, does not require additional approvals. Deviations from this Index, for precast units, shall require the approval of the State Drainage Engineer prior to construction. For precast construction, see Index No. 201 for opening and grouting details.
3. Reinforcing steel shall be either Grade 40 or 60.
4. Concrete shall be Class II, except ASTM C478 (4000 psi) concrete may be substituted for precast items manufactured in plants meeting the requirements of Section 449 of the Specifications.
5. Chamfer: All exposed edges and corners to be chamfered ¾" unless otherwise shown.
6. That portion of corrugated Metal pipe in direct contact with the concrete slab and extending 12" beyond shall have a continuous bituminous coating of 0.004" minimum thickness coated applied prior to placing of the concrete.
7. Sodding shall be in accordance with Index No. 281 and paid for under the contract unit price for Performance Turf, SY.
8. Basis of payment for either cast-in-place or precast construction shall be the estimated quantities tabulated on the Index. Concrete and reinforcing steel shall be paid for under the contract unit prices for Class II Concrete (Endwalls), CY and Reinforcing Steel (Roadway), LB.

LAST REVISION	REVISION	DESCRIPTION:				
07/01/09			FDOT DESIGN STANDARDS 2013	STRAIGHT CONCRETE ENDWALLS SINGLE AND DOUBLE 72" PIPE	INDEX NO. 253	SHEET NO. 1

C:\d*projects\standards\roadway\00200-s\00253-01.dgn rd960rh 1:53:44 PM 6/28/2012

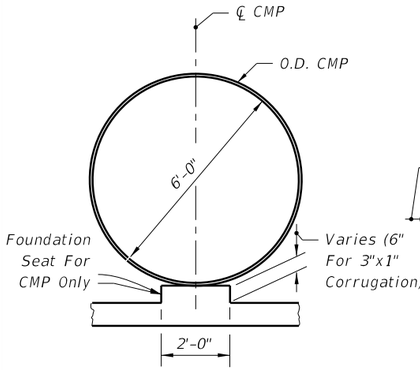

SECTION BB

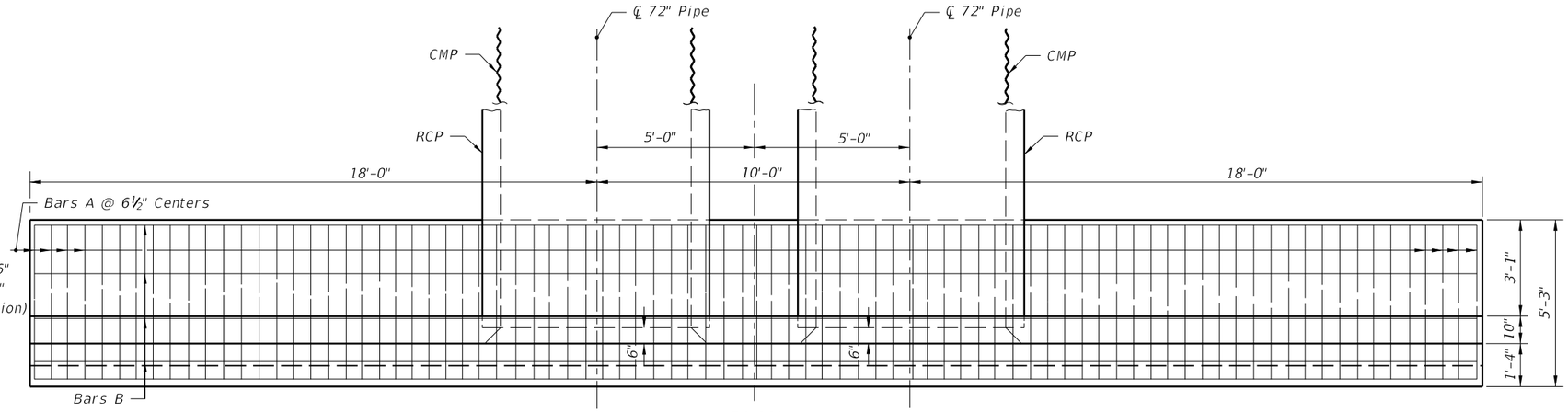

PLAN
(Showing Bars In Footing)

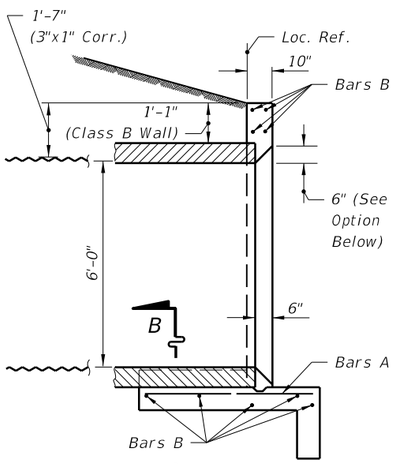

SECTION AA

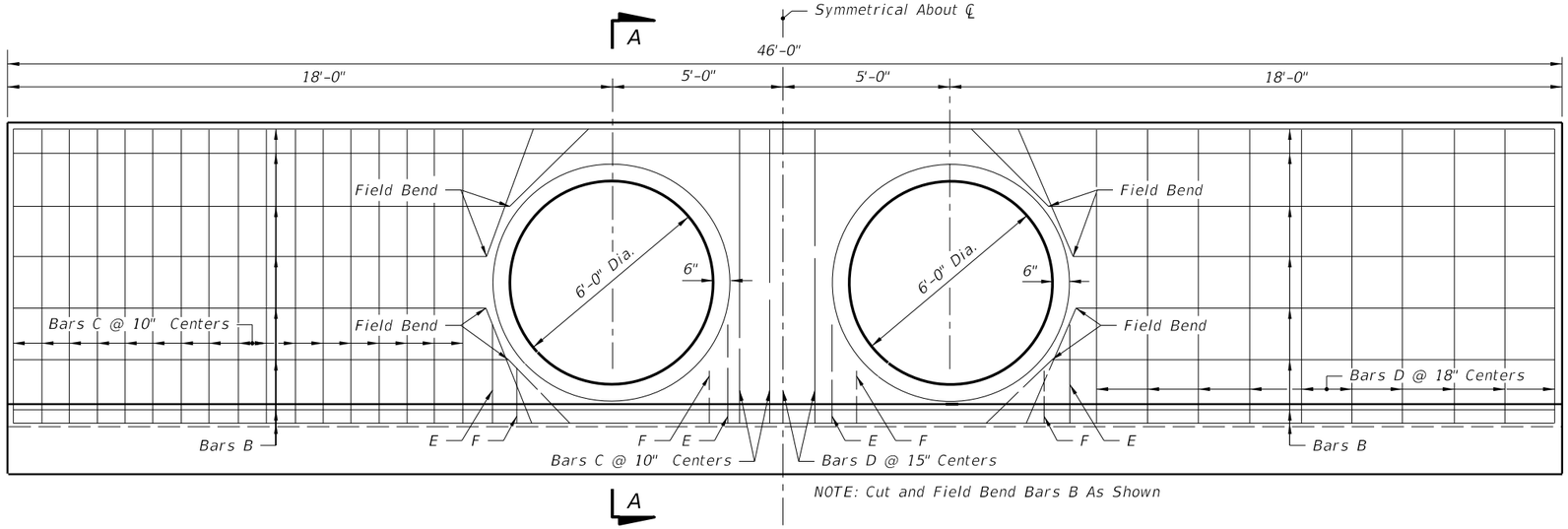

HALF ELEVATION
(Showing Bars In Back Face Of Wall)

HALF ELEVATION
(Showing Bars In Front Face Of Wall)

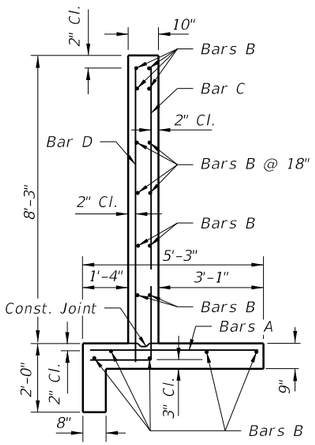

TYPICAL SECTION
THRU ENDWALL

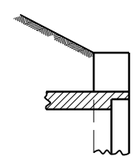

OPTIONAL ENTRANCE
FOR CONCRETE PIPE

BILL OF REINFORCING STEEL

MARK	SIZE	NO. REQD.	LENGTH	LOCATION	BENDING
A	5	85	4'-11"	Footing	Straight
B	4	17	45'-8"	Footing & Wall	Straight
C	5	38	10'-5"	Wall	Bend
D	4	23	8'-7"	Wall	Straight
E	4	8	2'-6"	Wall	Straight
F	4	8	1'-6"	Wall	Straight

BENDING DIAGRAM

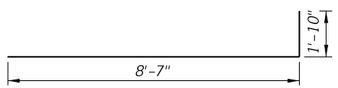

BAR C

NOTE: All bar dimensions are out to out

ESTIMATED QUANTITIES

ITEM	UNIT	RCP	CMP
Concrete Class II	Cu. Yd.	17.5	17.8
Reinforcing Steel	Lb.	1519	1519

NOTE: See Sheet 1 of 2 for General Notes.

C:\d\projects\standards\roadway\00200-s\00253-02.dgn
rd960rh
1:53:46 PM
6/28/2012

LAST REVISION	REVISION	DESCRIPTION:			INDEX NO.	SHEET NO.
07/01/07			FDOT DESIGN STANDARDS 2013	STRAIGHT CONCRETE ENDWALLS SINGLE AND DOUBLE 72" PIPE	253	2

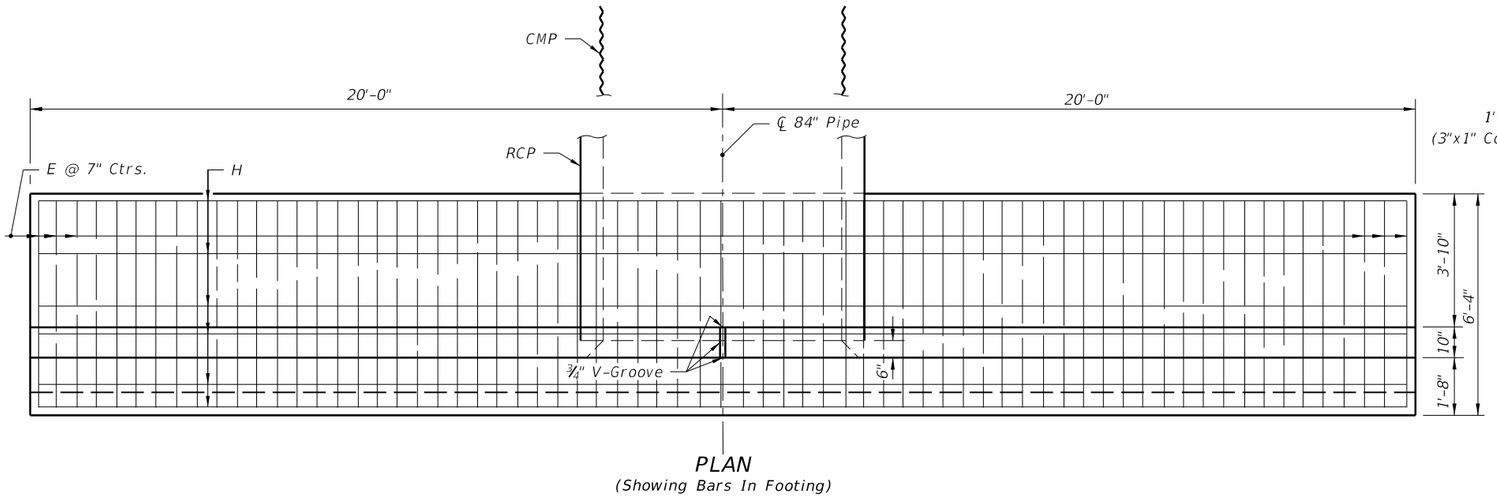

PLAN
(Showing Bars In Footing)

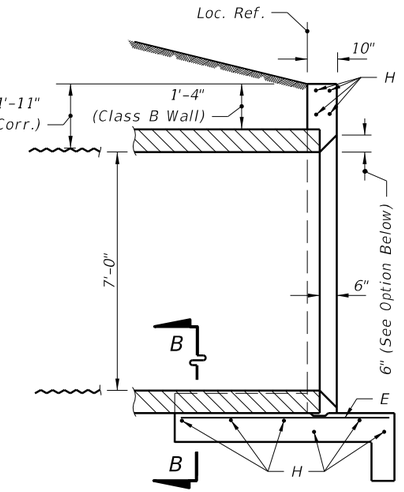

SECTION AA

BILL OF REINFORCING STEEL

MARK	SIZE	NO. REQD.	LENGTH
E	6	69	6'-0"
H	4	20	39'-8"
V_1	6	26	12'-4"
V_2	6	26	7'-10"
V_3	4	22	10'-2"
V_4	4	4	2'-0"

BENDING DIAGRAM

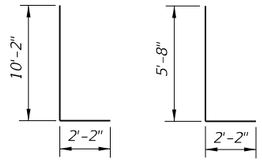

BAR V_1 BAR V_2

NOTE: All bar dimensions are out to out

ESTIMATED QUANTITIES

ITEM	UNIT	RCP	CMP
Class II Concrete	Cu. Yd.	20.0	20.2
Reinforcing Steel	Lb.	2,095	2,095

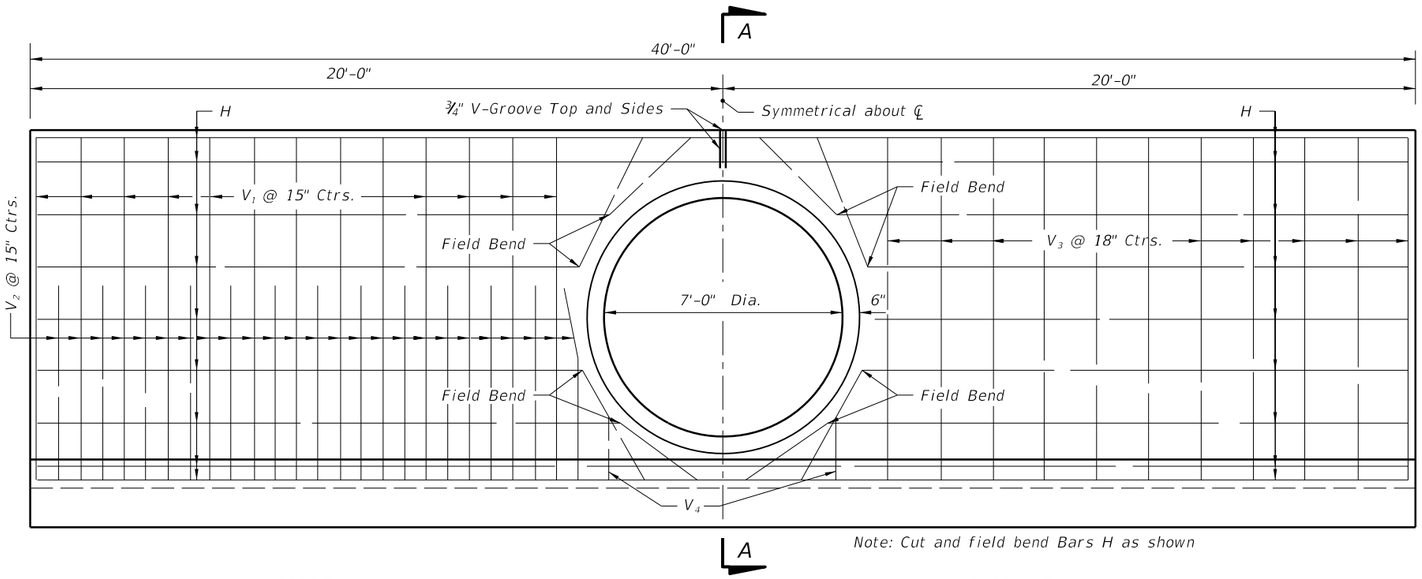

Note: Cut and field bend Bars H as shown

HALF ELEVATION
(Showing Bars In Back Face Of Wall)

HALF ELEVATION
(Showing Bars In Front Face Of Wall)

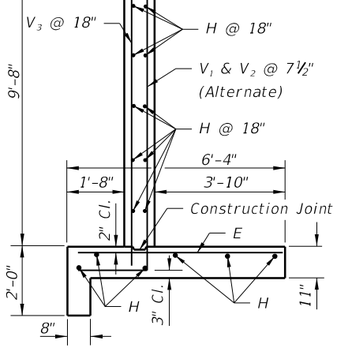

TYPICAL SECTION
THRU ENDWALL

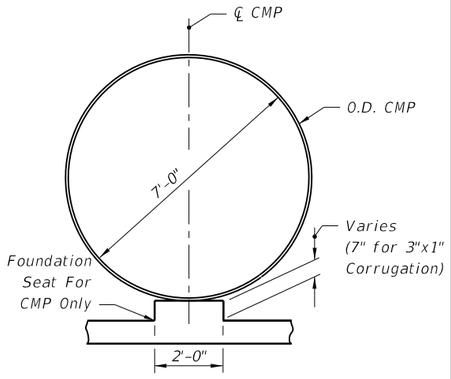

SECTION BB

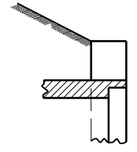

OPTIONAL ENTRANCE
FOR CONCRETE PIPE

GENERAL NOTES

1. Straight concrete endwalls are intended for use outside the clear zone.
2. Endwalls may be cast-in-place or precast construction. Cast-in-place endwalls shall conform to the details on this index, design specifications AASHTO 1989. Precast construction which adheres to this Index, including any additional reinforcement required for handling which shall be determined by the Contractor or supplier, does not require additional approvals. Deviations from this Index, for precast units, shall require the approval of the State Drainage Engineer prior to construction. For precast construction, see Index No. 201 for opening and grouting details.
3. Reinforcing steel shall be either Grade 40 or 60.
4. Concrete shall be Class II, except ASTM C478 (4000 psi) concrete may be substituted for precast items manufactured in plants meeting the requirements of Section 449 of the Specifications.
5. Chamfer: All exposed edges and corners to be chamfered ¾" unless otherwise shown.
6. That portion of corrugated metal pipe in direct contact with the concrete slab and extending 12" beyond shall have a continuous bituminous coating of 0.004" minimum thickness applied prior to placing of the concrete.
7. Sodding shall be in accordance with Index No. 281 and paid for under the contract unit price for Performance Turf, SY.
8. Basis of payment for either cast-in-place or precast construction shall be the estimated quantities tabulated on the Index. Concrete and reinforcing steel shall be paid for under the contract unit prices for Class II Concrete (Endwalls), CY and Reinforcing Steel (Roadway), LB.

C:\d*projects\standards\roadway\00200-s\00255-01.dgn
rd960rh
1:53:49 PM
6/28/2012

LAST REVISION	REVISION	DESCRIPTION:				
07/01/09			FDOT DESIGN STANDARDS 2013	STRAIGHT CONCRETE ENDWALLS SINGLE 84" PIPE	INDEX NO. 255	SHEET NO. 1

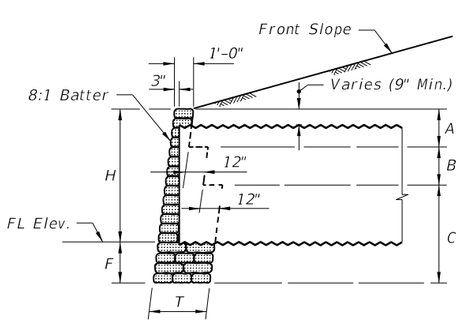

CORRUGATED METAL PIPE

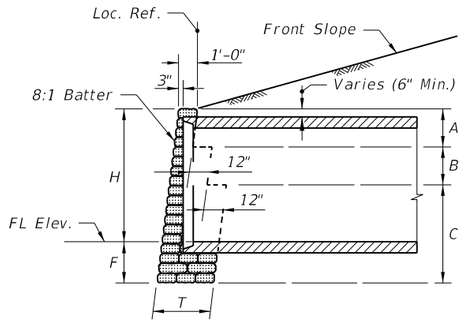

CONCRETE PIPE

SECTION YY

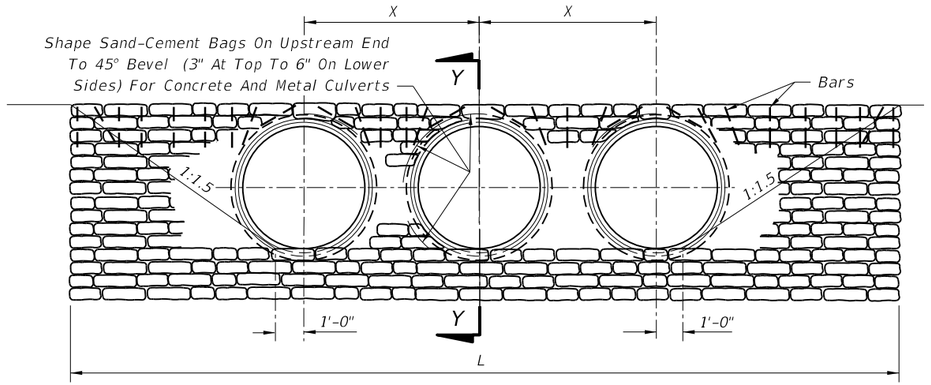

Note:

1. *For concrete and corrugated metal pipes. Concrete pipe shown.*
2. *The top row of riprap bags shall be secured by pinning, using #4 reinforcing bars 18 inches in length, as follows:*
   - *a. The end bags shall be secured using two bars per bag, one vertical and one diagonal as shown.*
   - *b. The next to last bag on each end shall be secured with two bars vertically.*
   - *c. Bags located over the pipe shall be secured by a bar which is driven diagonally except that for concrete pipe two bars shall be used for single bags above the pipe.*
   - *d. Intermediate bags shall be secured with a single bar.*

Bars shall be driven to one inch below the surface of the bag. The cost of furnishing and installing the bars shall be included in the cost of the riprap.

FRONT ELEVATION

TABLE OF DIMENSIONS AND QUANTITIES FOR ONE ENDWALL

SIZE OF PIPE	H	T	A	B	C	F	X	ONE PIPE CULVERTS			TWO PIPE CULVERTS			THREE PIPE CULVERTS			FOUR PIPE CULVERTS		
								L	RIPRAP CY		L	RIPRAP CY		L	RIPRAP CY		L	RIPRAP CY	
									CP	CMP		CP	CMP		CP	CMP		CP	CMP
18"	2'-3"	1'-0"	4'-0"	0'-0"	0'-0"	1'-9"	2'-10"	8'-9"	1.2	1.2	11'-7"	1.5	1.6	14'-5"	1.8	1.9	17'-3"	2.1	2.3
24"	2'-9"	2'-0"	2'-0"	2'-6"	0'-0"	1'-9"	3'-5"	10'-3"	2.4	2.5	13'-8"	3.0	3.2	17'-1"	3.7	4.0	20'-6"	4.3	4.7
30"	3'-4"	2'-0"	2'-0"	3'-2"	0'-0"	1'-10"	4'-3"	12'-0"	3.3	3.4	16'-3"	4.2	4.5	20'-6"	5.1	5.5	24'-9"	6.0	6.5
36"	3'-10"	2'-0"	2'-0"	3'-8"	0'-0"	1'-10"	5'-1"	13'-6"	4.0	4.2	18'-7"	5.2	5.7	23'-8"	6.3	6.9	28'-9"	7.4	8.2
42"	4'-5"	3'-0"	2'-0"	2'-0"	2'-4"	1'-11"	6'-0"	15'-3"	6.4	6.7	21'-3"	8.3	8.9	27'-3"	10.2	11.2	33'-3"	12.3	13.4
48"	4'-11"	3'-0"	2'-0"	2'-0"	2'-10"	1'-11"	6'-9"	16'-9"	7.7	8.1	23'-6"	10.0	10.8	30'-3"	12.3	13.5	37'-0"	14.5	16.2
54"	5'-6"	3'-0"	2'-0"	2'-0"	3'-6"	2'-0"	7'-8"	18'-6"	9.5	10.1	26'-2"	12.4	13.5	33'-10"	15.3	17.0	41'-6"	18.2	20.4
60"	6'-0"	3'-0"	2'-0"	2'-0"	4'-0"	2'-0"	8'-6"	20'-0"	11.0	11.7	28'-6"	14.4	15.8	37'-0"	17.8	19.8	45'-6"	21.1	23.8
66"	6'-7"	3'-0"	2'-0"	2'-0"	4'-8"	2'-1"	9'-3"	21'-9"	13.2	14.1	31'-0"	17.2	18.9	40'-3"	21.2	23.7	49'-6"	25.1	28.5
72"	7'-1"	3'-0"	2'-0"	2'-0"	5'-2"	2'-1"	10'-0"	23'-3"	15.0	16.0	33'-3"	19.4	21.4	43'-3"	23.9	26.8	53'-3"	28.3	32.3
78"	7'-8"	3'-0"	2'-0"	2'-0"	5'-10"	2'-2"	10'-9"	25'-0"	17.5	18.7	35'-9"	22.6	25.0	46'-6"	27.8	31.3	57'-3"	32.9	37.6
84"	8'-2"	3'-0"	2'-0"	2'-0"	6'-4"	2'-2"	11'-8"	26'-6"	19.5	20.9	38'-2"	25.3	28.1	49'-10"	31.1	35.2	61'-6"	36.9	42.4

GENERAL NOTES

1. *Straight sand-cement endwalls are intended for use outside the clear zone.*

C:\d\projects\standards\roadway\00200-s\00258-01.dgn
rd960rh
1:53:51 PM
6/28/2012

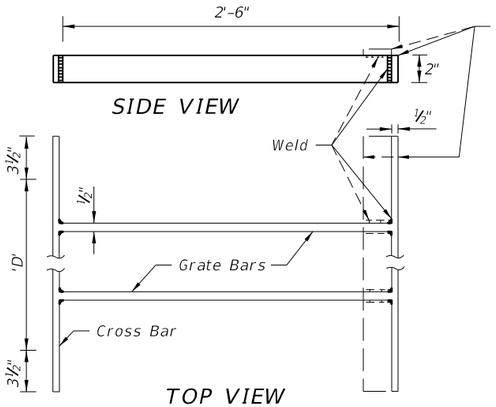

GRATE TYPE NO. 1

Pipe Size	Grate Bars Reqd.	Grate (lb)
15"	2	28.93

Bars to be evenly spaced across dimension 'D'
All bars ½" x 2"

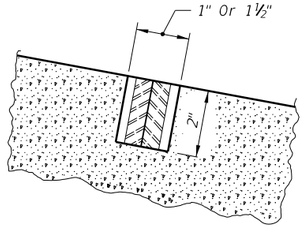

SECTION AA

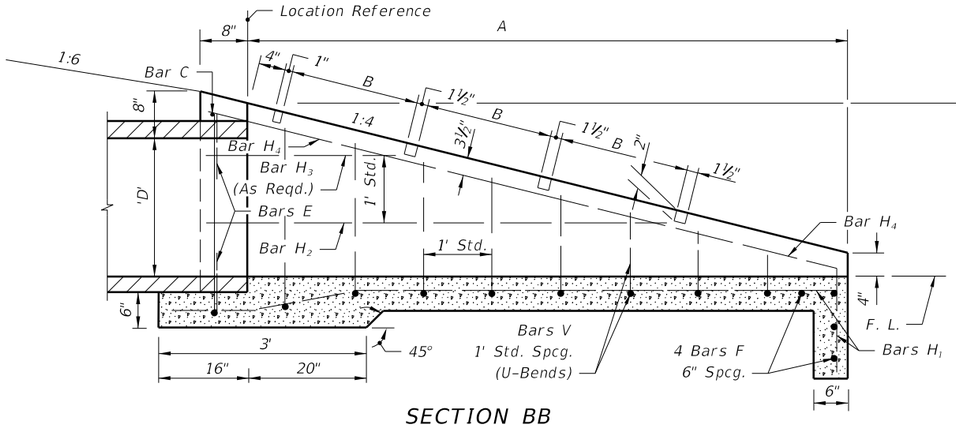

SECTION BB

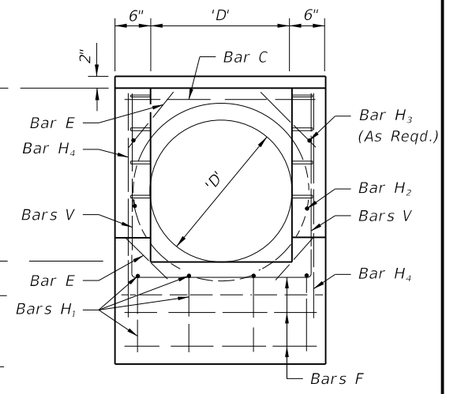

END VIEW

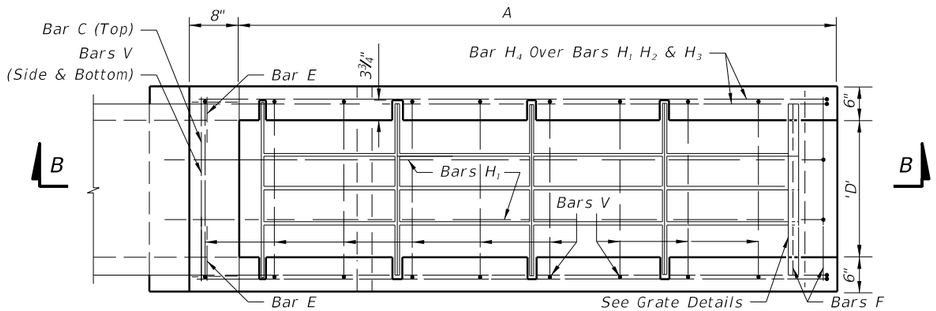

TOP VIEW

TABLE OF DIMENSIONS AND QUANTITIES											
	Pipe Size D	A	B	Class I Conc. (CY)	Reinf. Steel (lb)	Number Of Grates Reqd.		Total Grate Wt. (lb)	Sodding (SY)	Slope Transition	
						Type No. 1	Type No. 2			Offset	L
Slope 1:4	15"	5.67'	2.38'	0.85	56	2	0	57.86	15	4.2'	42'
	18"	6.67'	1.875'	1.01	73	0	3	101.08	16	4.8'	48'
	24"	8.67'	1.875'	1.65	97	0	4	174.52	19	5.8'	58'
	30"	10.67'	1.875'	2.33	129	0	5	267.75	21	6.9'	69'

FRONT SLOPE
TRANSITION AT ENDWALL

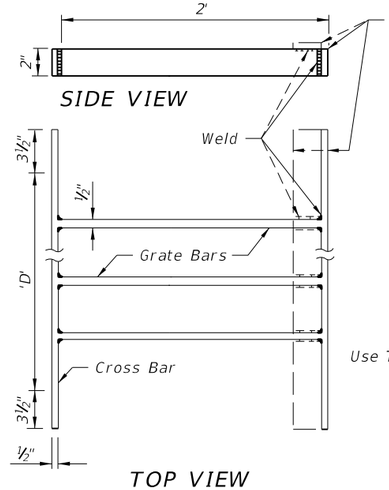

GRATE TYPE NO. 2

Pipe Size	Grate Bars Reqd.	Grate (lb)
18"	3	33.69
24"	4	43.63
30"	5	53.55

Bars to be evenly spaced across dimension 'D'.
All bars ½" x 2".

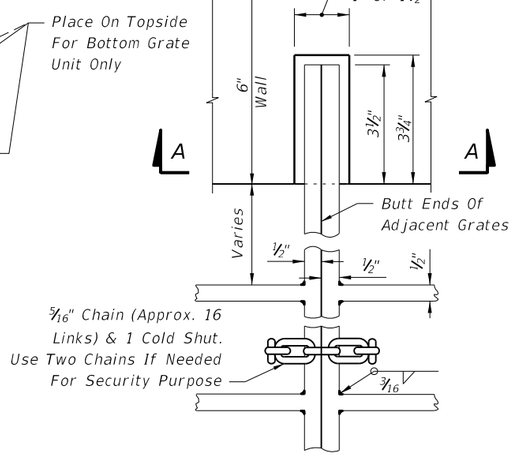

GRATE, SEAT, WELD & CHAIN DETAIL

GENERAL NOTES

1. This endwall is to be used only in the clear zone for the drainage of medians and other areas having low design velocities and negligible debris.

2. Reinforcing steel: All bars are size #4. Spacings shown are center to center. Laps to be 12" minimum. Clearance is 2" except as noted. Square welded wire fabric (two cages max.) having an equivalent cross sectional area (0.20 sq. in.) may be substituted for bar reinforcement.

3. Grates shall be ASTM A242/A242M, A572/A572M or ASTM A5888/A588M, Grade 50 steel. When "Alt. G" grates are specified in the plans, grates shall be galvanized in accordance with Section 975 and 425.3.2 of the Standard Specifications.

4. Endwall to be paid for under the contract unit price for U-Endwall, Each. Payment shall include cost of concrete, reinforcing steel, grate, and accessories. Quantities shown are for estimating purposes only.

5. Sod slopes 5' each side and above endwall. Sodding to be paid for under contract unit price for Performance Turf, SY.

6. Precasting of this endwall will be permitted. Precast units shall conform to the dimensions shown or in accordance with approved shop drawings. Request for shop drawing approval shall be directed to the State Drainage Engineer. Use Index No. 201 for opening and grouting details.

7. Concrete shall be Class I except ASTM C478 (4000 psi) concrete may be substituted for precast items manufactured in plants meeting the requirements of Section 449 of the Specifications.

C:\d\projects\standards\roadway\00200-s\00260-01.dgn
rd960rh
1:53:53 PM
6/28/2012

LAST REVISION	REVISION	DESCRIPTION:				
07/01/09			FDOT DESIGN STANDARDS 2013	U-TYPE CONCRETE ENDWALLS WITH GRATES 15" TO 30" PIPE	INDEX NO. 260	SHEET NO. 1

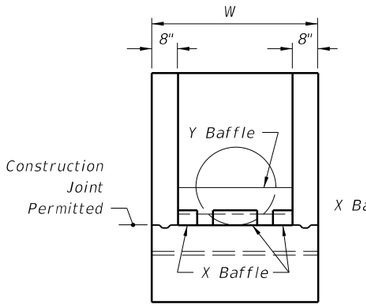

END VIEW

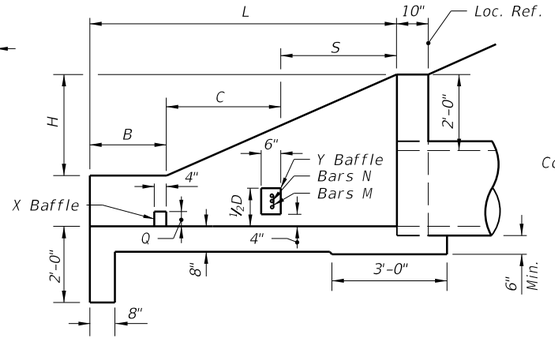

SECTION AA

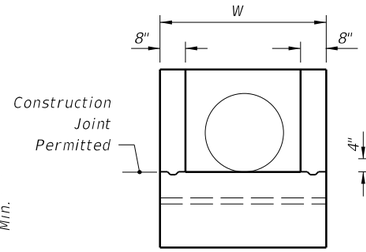

END VIEW

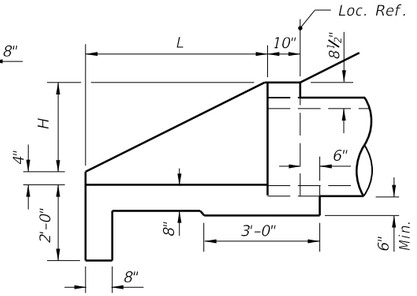

SECTION BB

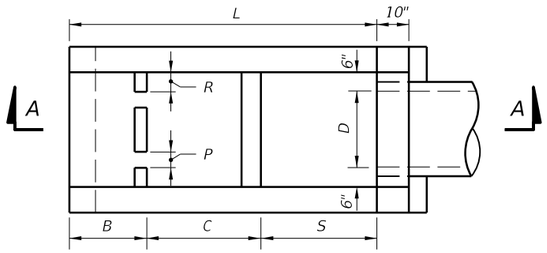

PLAN

DIMENSIONAL DETAILS

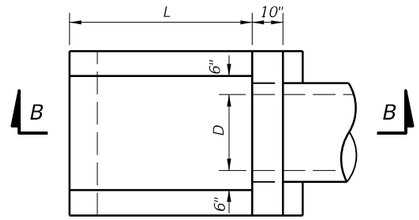

PLAN

DIMENSIONAL DETAILS

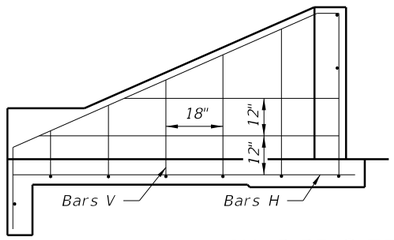

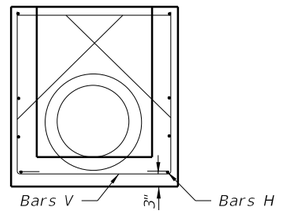

ALL PIPE SIZES
SIDE VIEW AND BACKWALL SECTION
REINFORCING DETAIL

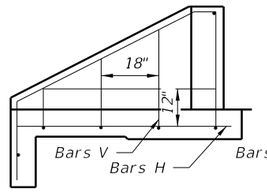

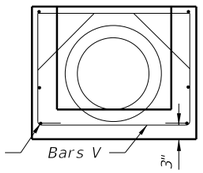

ALL PIPE SIZES
SIDE VIEW AND BACKWALL SECTION
REINFORCING DETAIL

DIMENSIONS AND QUANTITIES FOR ONE U-ENDWALL

Pipe Size		L	H	W	S	B	C	X Baffle			Y Baffle Reinf. Steel		Class I Conc. Cu. Yd.	Reinf. Steel Lbs.
D	Area Sq. Ft.							P	Q	R	Bar M	Bar N		
15"	1.23	5'-9"	2'-3½"	3'-7"	2'-3"	1'-3"	2'-3"	4"	4"	4"	2 #4	1 #4	1.61	72
18"	1.77	6'-6"	2'-5"	3'-10"	2'-6"	1'-6"	2'-6"	4"	4"	5"	3 #4	2 #4	1.89	86
24"	3.14	8'-0"	2'-8"	4'-4"	3'-0"	2'-0"	3'-0"	5"	5"	6"	4 #4	3 #4	2.52	108
30"	4.91	9'-6"	2'-11"	4'-10"	3'-6"	2'-6"	3'-6"	5"	5"	7"	4 #4	4 #4	3.34	131

WITH BAFFLES

DIMENSIONS AND QUANTITIES FOR ONE U-ENDWALL

Pipe Size		L	H	W	Class I Conc. Cu. Yd.	Reinf. Steel Lbs.
D	Area Sq. Ft.					
15"	1.23	3'-3"	1'-7½"	3'-7"	0.89	39
18"	1.77	3'-9"	1'-10½"	3'-10"	1.05	43
24"	3.14	4'-9"	2'-4½"	4'-4"	1.40	55
30"	4.91	5'-9"	2'-10½"	4'-10"	1.88	64

WITHOUT BAFFLES

GENERAL NOTES

1. Baffles to be constructed only when called for in plans.
2. When steel grating is required on endwall see Sheet 3 of 3 for details.
3. All reinforcing No. 4 bars with 2" clearance except as noted.
4. All angles, channels and bars shall be ASTM A242/A242M, A572/A572M or A588/A588M Grade 50 steel. When designated Alternate G in the plans galvanize in accordance with Section 975 and 425-3.2 of the Standard Specifications.
5. Channel section C 3x6 may be substituted for C 4x5.4 channel.
6. Precasting of this endwall will be permitted. Precast units shall conform to the dimensions shown or in accordance with approved shop drawings. Request for shop drawing approval shall be directed to the State Drainage Engineer. Use Index No. 201 for opening and grouting details.
7. Concrete shall be Class I, except ASTM C478 (4000 psi) concrete may be substituted for precast items manufactured in plants meeting the requirements of Section 449 of the Specifications.
8. Sodding shall be in accordance with Index No. 281, and paid for under the contract unit price for Performance Turf, SY.
9. Endwall to be paid for under the contract unit price for U-Endwall, Each. Payment shall include cost of concrete, reinforcing steel, and when called for in the plans, steel grating, baffles and accessories. Quantities shown are for estimating purposes only.

ENDWALLS FOR 1:2 SLOPES

LAST REVISION	REVISION	DESCRIPTION:		FDOT DESIGN STANDARDS 2013	U-TYPE CONCRETE ENDWALLS BAFFLES & GRATE OPTIONAL 15" TO 30" PIPE	INDEX NO.	SHEET NO.
07/01/09						261	1

C:\d\projects\standards\roadway\00200-s\00261-01.dgn
rd960rh
1:53:55 PM
6/28/2012

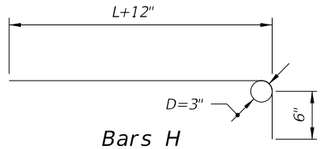

Bars H

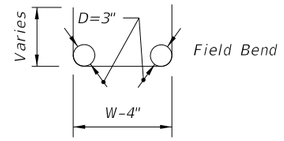

Bars V

BENDING DIAGRAM

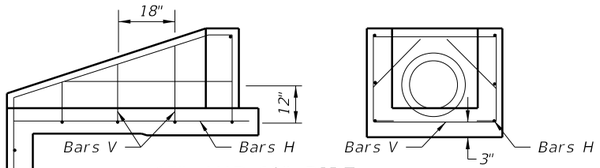

15" AND 18" PIPE

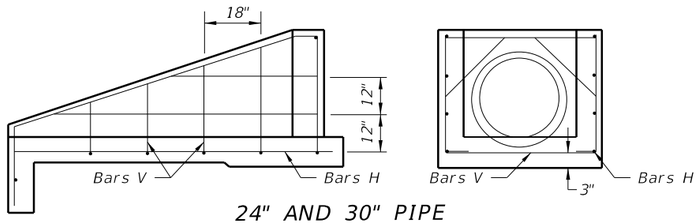

24" AND 30" PIPE

1:3 SLOPES

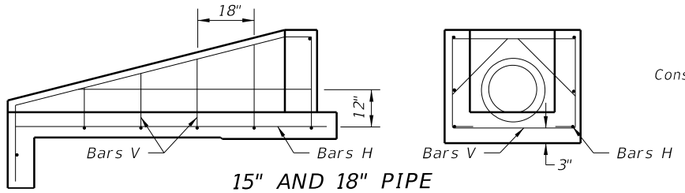

15" AND 18" PIPE

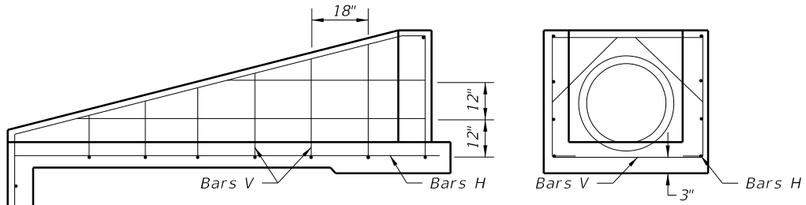

24" AND 30" PIPE

1:4 SLOPES

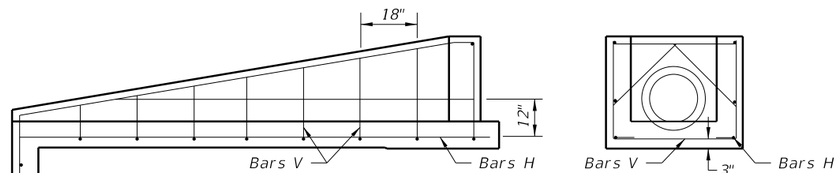

15" AND 18" PIPE

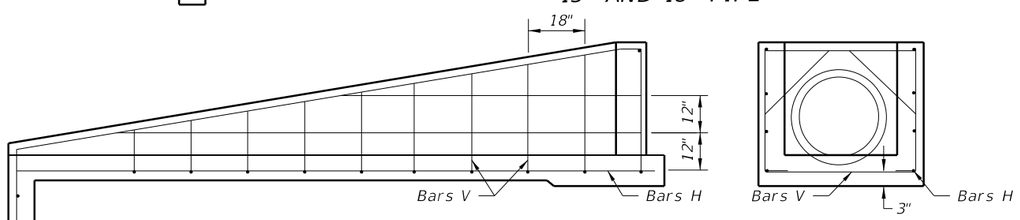

24" AND 30" PIPE

1:6 SLOPES

SIDE VIEWS AND BACKWALL SECTIONS

REINFORCING DETAILS

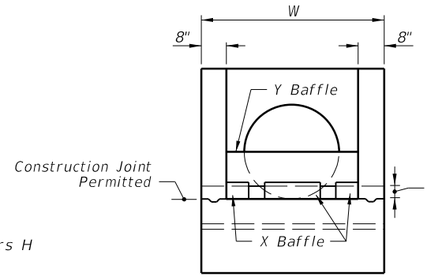

END VIEW

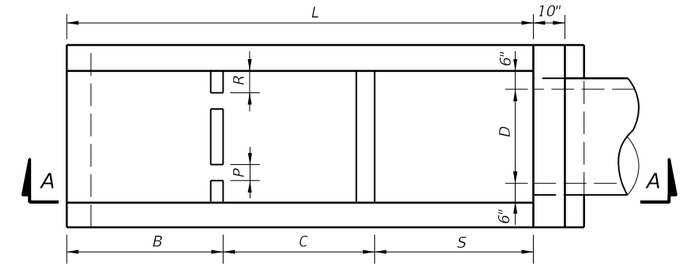

PLAN

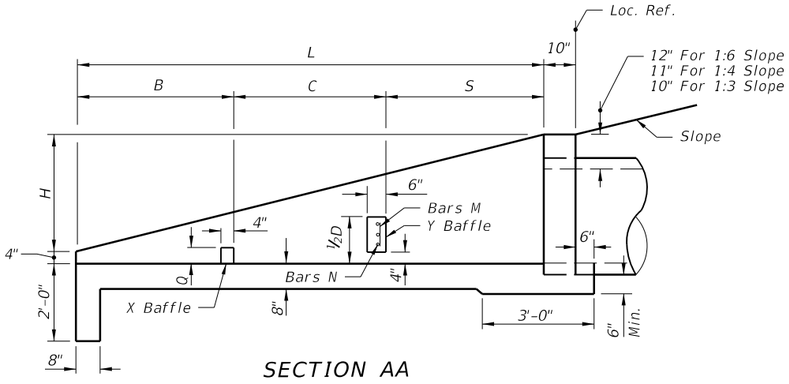

SECTION AA

DIMENSIONAL DETAILS

DIMENSIONS AND QUANTITIES FOR BAFFLES

Pipe Size D	X Baffle			Ybaffle Reinf. Steel		Class I Concrete Cu. Yd.	Reinf. Steel Lbs
	P Width	Q Height	R Length	Bar M	Bar N		
15"	4"	4"	4"	2- #4	1- #4	0.10	4
18"	4"	4"	5"	3- #4	2- #4		8
24"	5"	5"	6"	4- #4	3- #4		12
30"	5"	5"	7"	4- #4	4- #4		16

DIMENSIONS AND QUANTITIES FOR ONE U-ENDWALL

Rate Of Slope	Pipe Size		L	H	W	Baffle Locations (When Required)			Class I Concrete Cu. Yd.	Reinf. Steel Lbs.
	D	Area (Sq. Ft.)				S	B	C		
1 : 3	15"	1.23	5'-3"	1'-9"	3'-7"	1'-9"	1'-9"	1'-9"	1.19	51
	18"	1.77	6'-0"	2'-0"	3'-10"	2'-0"	2'-0"	2'-0"	1.42	56
	24"	3.14	7'-6"	2'-6"	4'-4"	2'-6"	2'-6"	2'-6"	1.94	77
	30"	4.91	9'-0"	3'-0"	4'-10"	3'-0"	3'-0"	3'-0"	2.54	96
1 : 4	15"	1.23	7'-4"	1'-10"	3'-7"	2'-6"	2'-6"	2'-4"	1.54	64
	18"	1.77	8'-4"	2'-1"	3'-10"	2'-10"	2'-10"	2'-8"	1.84	71
	24"	3.14	10'-4"	2'-7"	4'-4"	3'-6"	3'-6"	3'-4"	2.53	92
	30"	4.91	12'-4"	3'-1"	4'-10"	4'-2"	4'-2"	4'-0"	3.34	124
1 : 6	15"	1.23	11'-6"	1'-11"	3'-7"	3'-10"	3'-10"	3'-10"	2.19	89
	18"	1.77	13'-0"	2'-2"	3'-10"	4'-4"	4'-4"	4'-4"	2.63	103
	24"	3.14	16'-0"	2'-8"	4'-4"	5'-4"	5'-4"	5'-4"	3.59	143
	30"	4.91	19'-0"	3'-2"	4'-10"	6'-4"	6'-4"	6'-4"	4.81	180

ENDWALLS WITH AND WITHOUT BAFFLES FOR 1:3, 1:4 AND 1:6 SLOPES

C:\d\projects\standards\roadway\00200-s\00261-02.dgn
rd960rh
1:53:57 PM
6/28/2012

LAST REVISION	REVISION	DESCRIPTION:				
07/01/12			FDOT DESIGN STANDARDS 2013	U-TYPE CONCRETE ENDWALLS BAFFLES & GRATE OPTIONAL 15" TO 30" PIPE	INDEX NO. 261	SHEET NO. 2

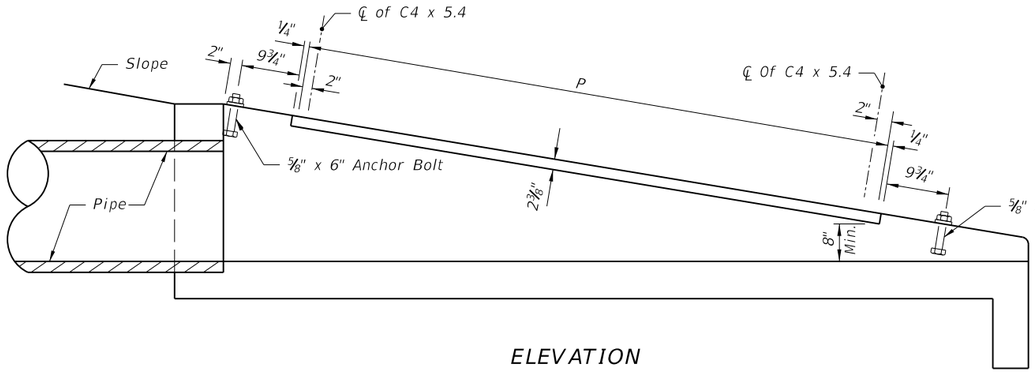

ELEVATION

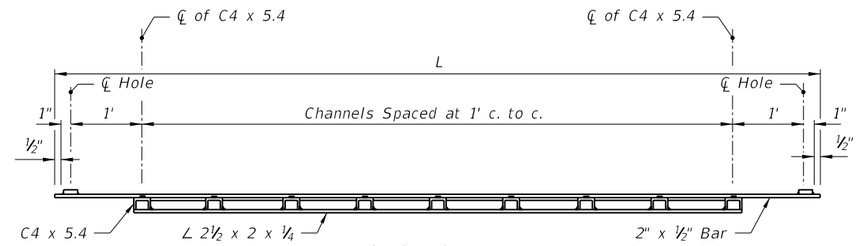

SECTION AA

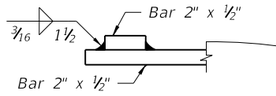

BAR TO BAR WELD

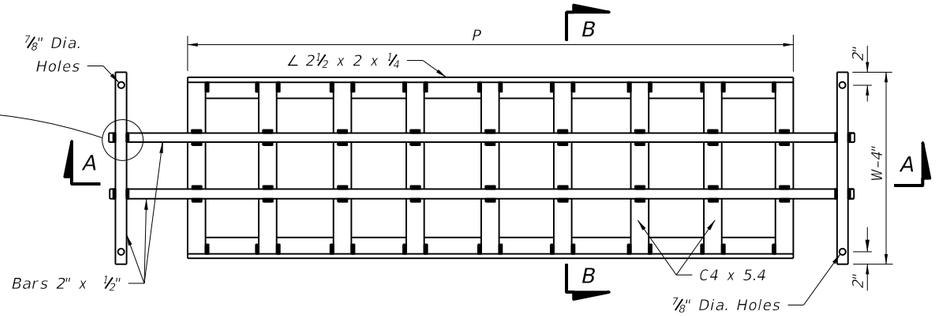

PLAN

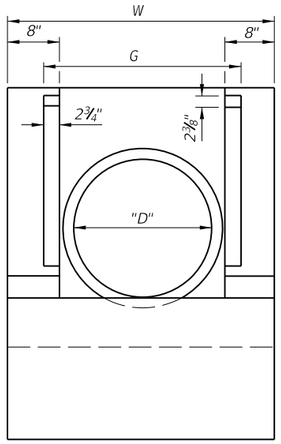

END VIEW

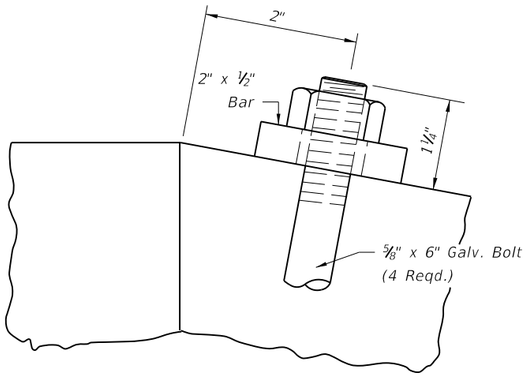

ANCHOR BOLT DETAIL

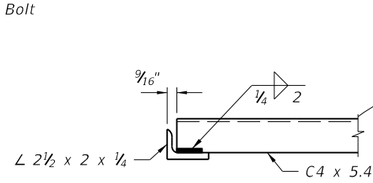

CHANNEL TO ANGLE WELD

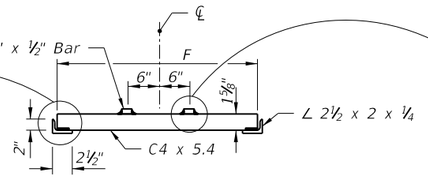

SECTION BB

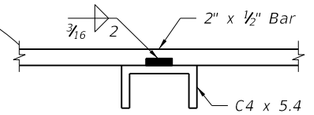

BAR TO CHANNEL WELD

MOUNTING FOR STEEL GRATE

STEEL GRATE

STEEL GRATING USE CRITERIA

1. Grates to be used on pipe culvert endwalls located within the designated clear zone. Positive debris control shall be provided at all upgradient openings. Grates shall not be used unless one or more of the following conditions exist:

   A. Drainage area to culvert consists of median or infield areas or areas where debris and/or drift is negligible.
   B. Runoff to culvert is by sheet flow or in such ill defined channels that debris transport is not considered a major problem.
   C. Runoff to culvert is minor except on an infrequent basis (10 to 15 year frequency); for example a drainage basin in flat sandy terrain with normally low ground water table.
   D. Areas where culvert blockage with resultant backwater would not seriously affect roadway embankment, traffic operation or upland property.

2. Steel grating to be used only where called for in plans.

TABLE OF DIMENSIONS AND QUANTITIES FOR ONE GRATE

Rate Of Slope	Size Pipe D	G	2 Each Bars @ 3.4 lb/ft			(X) Channels @ 5.4 lb/ft			2 Angles @ 3.62 lb/ft		Total Weight (lb)
			L	W-4"	lb	(X)	F	lb	P	lb	
1:6											
	15"	2' -8½"	9'-3"	3'-3"	85	8	2' -6⅞"	111	7'-4"	53	249
	18"	2' -11½"	10'-3"	3'-6"	94	9	3' -9⅞"	137	8'-4"	62	292
	24"	3' -5½"	13'-3"	4'-0"	117	12	3' -3⅞"	215	11'-4"	82	414
	30"	3' -11½"	16'-3"	4'-6"	141	15	3' -9⅞"	310	14'-4"	104	555
1:4											
	15"	2' -8½"	6'-3"	3'-3"	65	5	2' -6⅞"	70	4'-4"	32	167
	18"	2' -11½"	7'-3"	3'-6"	73	6	2' -9⅞"	92	5'-4"	39	204
	24"	3' -5½"	9'-3"	4'-0"	90	8	3' -3⅞"	144	7'-4"	53	287
	30"	3' -11½"	11'-3"	4'-6"	107	10	3' -9⅞"	206	9'-4"	68	381
1:3											
	15"	2' -8½"	4'-3"	3'-3"	51	3	2' -6⅞"	42	2'-4"	17	110
	18"	2' -11½"	5'-3"	3'-6"	60	4	2' -9⅞"	61	3'-4"	24	145
	24"	3' -5½"	6'-3"	4'-0"	70	5	3' -3⅞"	90	4'-4"	31	191
	30"	3' -11½"	8'-3"	4'-6"	87	7	3' -9⅞"	145	6'-4"	46	278

C:\d\projects\standards\roadway\00200-s\00261-03.dgn rd960rh 1:53:59 PM 6/28/2012

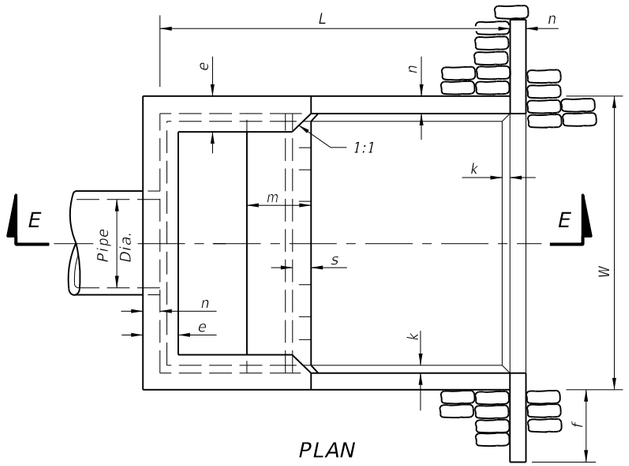

PLAN

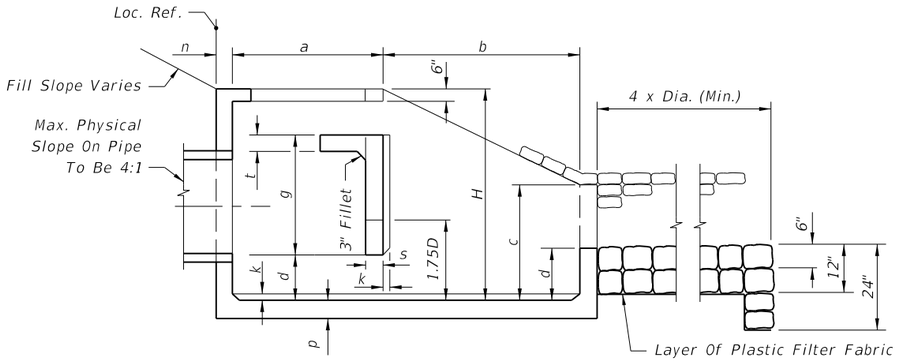

SECTION EE

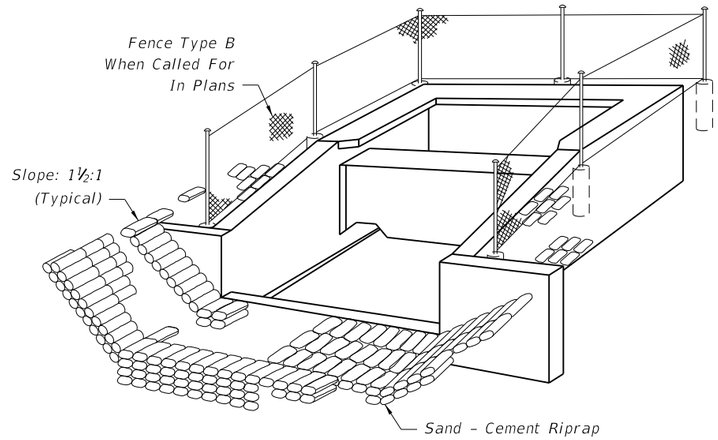

PERSPECTIVE

GENERAL NOTES

1. U-type concrete endwall energy dissipators are intended for use outside the clear zone.
2. Chamfer all exposed edges ¾".
3. Concrete shall be Class I, except ASTM C478 (4000 psi) concrete may be substituted for precast items manufactured in plants meeting the requirements of Section 449 of the Specifications.
4. Reinforcing steel shall have 2" min. cover.
5. Endwall to be paid for under the contract unit price for Class I Concrete (Endwalls), CY and Reinforcing Steel (Roadway), LB. Riprap to be paid for under the contract unit price for Riprap (Sand-Cement) (Roadway), CY. Cost of plastic filter fabric to be included in the contract unit price for riprap.
6. Fencing, when called for in the plans, to be paid for under the contract unit price for Fencing, Type B, LF. See Index No. 802 for details of Type B fencing.

Pipe Size		Q (Max) (cfs)	Dimensions																	Concrete Class I (CY)	Reinf. Steel (lb)	Sand-Cement Riprap (Nom.) (CY)
			Feet - Inches											Inches								
Dia. (in)	Area (SF)		W	H	L	a	b	c	d	e	f	g	m	n	p	s	t	k			
30	4.91	59	9-0	6-3	10-8	4-7	6-1	3-4	1-4	1-2	2-6	3-0	1-11	6	6½	7	7	3	6.72	736	10.6
36	7.07	85	10-5	7-3	12-4	5-3	7-1	3-10	1-7	1-3	3-0	3-6	2-3	7	7½	8	8	3	10.34	1,072	13.6
42	9.62	115	11-10	8-0	14-0	6-0	8-0	4-5	1-9	1-6	3-0	3-11	2-6	8	8½	9	8	4	14.82	1,429	17.5
48	12.57	151	13-3	9-0	15-8	6-9	8-11	4-11	2-0	1-7	3-0	4-5	2-10	9	9½	10	8	4	20.36	2,000	22.1
54	15.90	191	14-8	9-9	17-4	7-4	10-0	5-5	2-2	1-10	3-0	4-11	3-0	10	10½	10	8	4	27.19	2,659	27.2
60	13.63	236	16-1	10-9	19-0	8-0	11-0	5-11	2-5	1-11	3-0	5-4	3-4	11	11½	11	8	6	34.49	3,552	32.5
66	23.76	285	17-3	11-6	20-6	8-8	11-10	6-5	2-7	2-1	3-0	5-9	3-7	12	12½	12	8	6	42.82	4,472	38.3
72	28.27	339	18-6	12-3	22-0	9-3	12-9	6-11	2-9	2-3	3-0	6-2	3-9	12	12½	12	8	6	50.68	5,426	44.5

C:\d\projects\standards\roadway\00200-s\00264-01.dgn
rd960rh
1:54:08 PM
6/28/2012

LAST REVISION	REVISION	DESCRIPTION:		FDOT DESIGN STANDARDS 2013	U-TYPE CONCRETE ENDWALL ENERGY DISSIPATOR 30" TO 72" PIPE	INDEX NO.	SHEET NO.
07/01/09						264	1

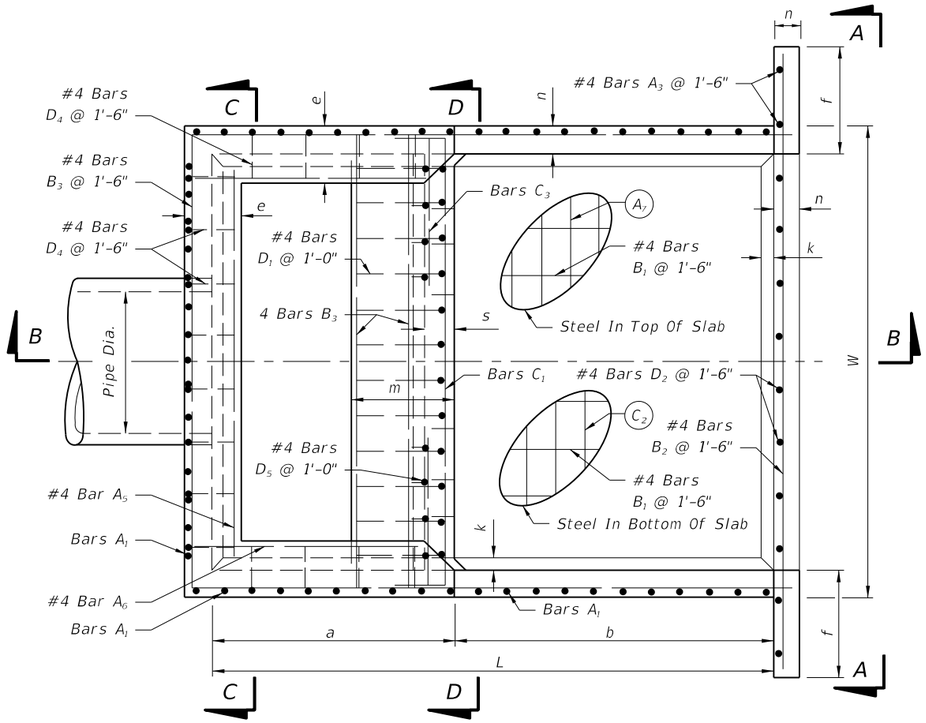

PLAN

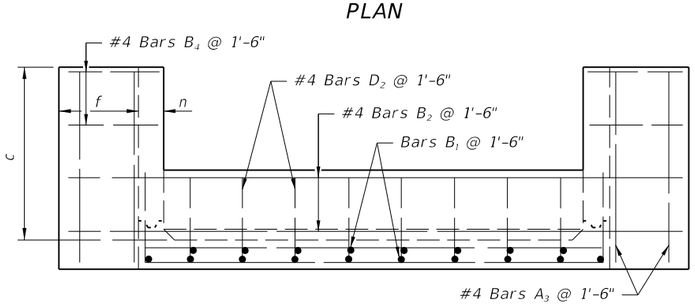

VIEW AA

Note: Bars C_4 & C_5 (N.S. & F.S.) equivalent in size to C_3 (cut and bend as required)

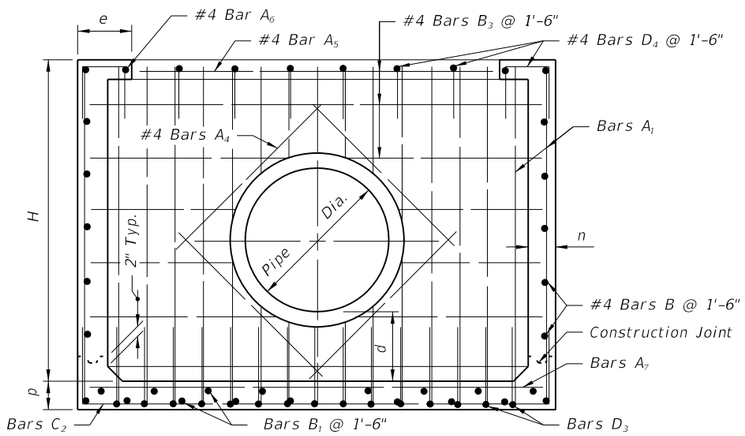

SECTION CC

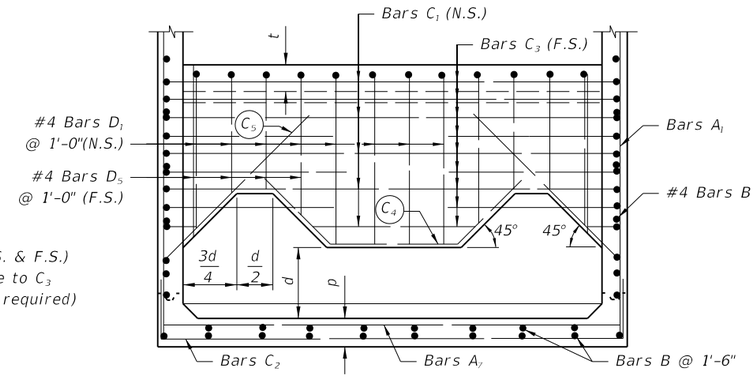

SECTION DD

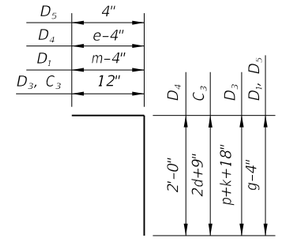

Bars: C_3, D_1, D_3, D_4, D_5

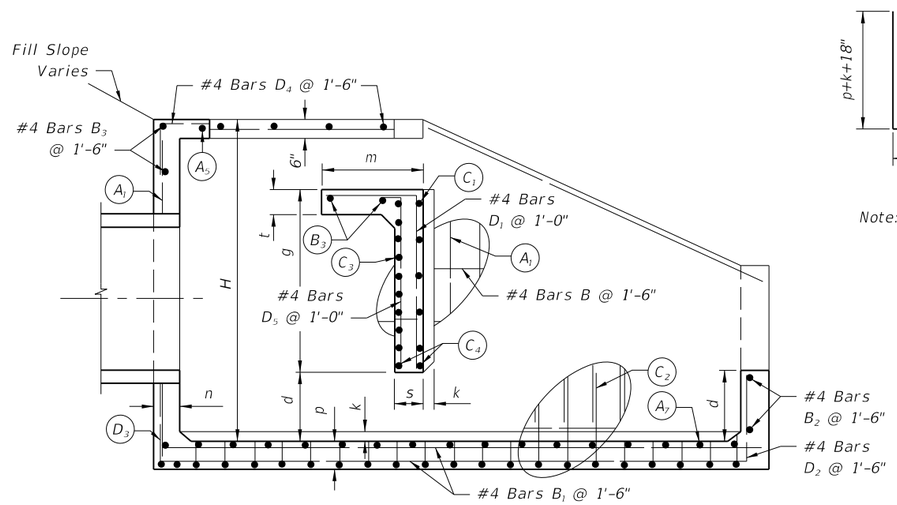

SECTION BB

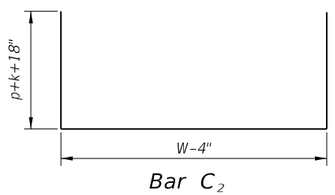

Bar C_2

Note: All bar dimensions are out to out.

BENDING DIAGRAM

BARS

Pipe Size	A_1		A_7		C_1		C_2		C_3		D_3	
	Size (No.)	Spacing (Ft.-In.)	Size (No.)	Spacing (Ft.-In.)	Size (No.)	Spacing (Ft.-In.)	Size (No.)	Spacing (Ft.-In.)	Size (No.)	Spacing (Ft.-In.)	Size (No.)	Spacing (Ft.-In.)
30"	4	0-9½	4	1-6	5	0-11	4	0-9½	5	0-5½	4	0-9½
36"	5	1-0	4	1-6	5	0-10	5	1-0	5	0-5	5	1-0
42"	5	0-11	4	1-6	6	1-1	5	0-11	6	0-6½	5	0-11
48"	5	0-9½	4	1-0	6	1-0	5	0-9½	6	0-6	5	0-9½
54"	5	0-8½	4	0-10	7	1-1	5	0-8½	7	0-6½	5	0-8½
60"	6	0-10	5	1-1	7	1-0	6	0-10	7	0-6	6	0-10
66"	6	0-8½	5	0-11½	7	0-11	6	0-8½	7	0-5½	6	0-8½
72"	6	0-7½	5	0-10	7	0-10	6	0-7½	7	0-5	6	0-7½

LAST REVISION 07/01/07 | REVISION | DESCRIPTION:

FDOT DESIGN STANDARDS 2013

U-TYPE CONCRETE ENDWALL
ENERGY DISSIPATOR 30" TO 72" PIPE

INDEX NO. 264 | SHEET NO. 2

C:\d\projects\standards\roadway\00200-s\00264-02.dgn rd960rh 1:54:10 PM 6/28/2012

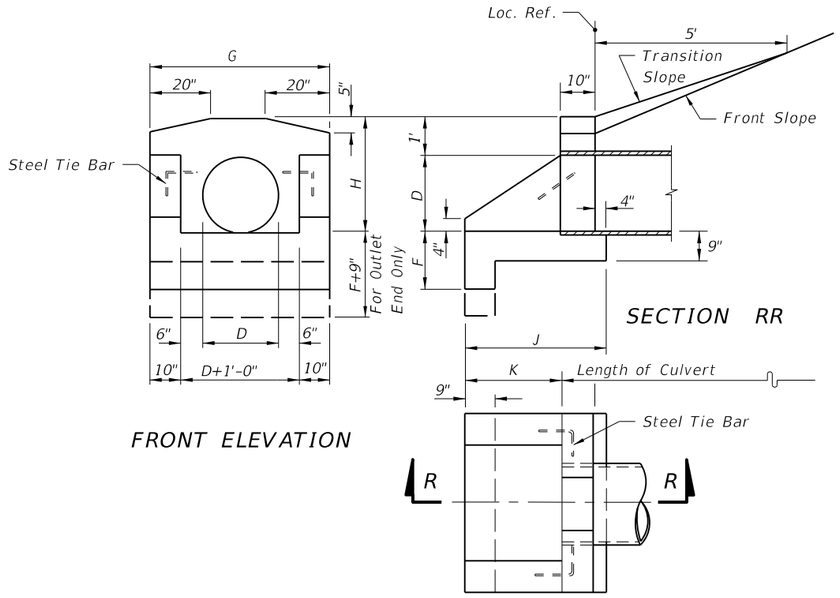

FRONT ELEVATION

SECTION RR

PLAN

CONCRETE ENDWALL WITH U-TYPE WINGS FOR PIPE CULVERTS

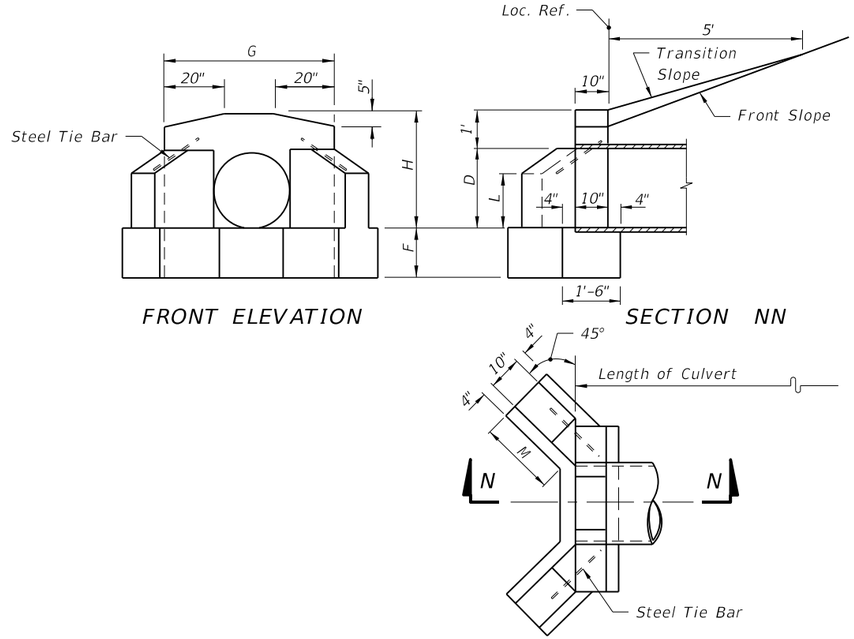

FRONT ELEVATION

SECTION NN

PLAN

CONCRETE ENDWALL WITH 45° WINGS FOR PIPE CULVERTS

TABLE OF DIMENSIONS AND ESTIMATED QUANTITIES
PIPE CULVERT ENDWALLS WITH U-TYPE WINGS

DIMENSIONS							QUANTITIES IN ONE ENDWALL						
Opening		Wall			Footing		Concrete, Class I, Total (CY)						Steel Tie Bars
							RCP		CMP		CIP		
D	Area (ft^2)	G	H	K	F	J	Inlet	Outlet	Inlet	Outlet	Inlet	Outlet	
12"	0.8	3'-8"	2'-0"	1'-0"	1'-3"	2'-2"	0.48	0.55	0.49	0.57	0.49	0.57	none
15"	1.2	3'-11"	2'-3"	1'-5"	1'-3"	2'-7"	0.59	0.67	0.62	0.70	0.61	0.70	none
18"	1.8	4'-2"	2'-6"	1'-9"	1'-3"	2'-11"	0.70	0.79	0.74	0.82	0.74	0.82	none
24"	3.1	4'-8"	3'-0"	2'-6"	1'-6"	3'-8"	1.01	1.11	1.06	1.16	1.06	1.16	2-#6 Bars x 2'-0"
30"	4.9	5'-2"	3'-6"	3'-3"	1'-6"	4'-5"	1.33	1.44	1.41	1.51	1.40	1.51	2-#6 Bars x 2'-0"
36"	7.1	5'-8"	4'-0"	4'-0"	1'-9"	5'-2"	1.73	1.85	1.84	1.96	1.82	1.94	2-#6 Bars x 2'-6"
42"	9.6	6'-2"	4'-6"	4'-9"	2'-0"	5'-11"	2.19	2.32	2.32	2.45			2-#6 Bars x 2'-6"
48"	12.6	6'-8"	5'-0"	5'-6"	2'-0"	6'-8"	2.64	2.78	2.81	2.95			2-#6 Bars x 3'-0"

TABLE OF DIMENSIONS AND ESTIMATED QUANTITIES
PIPE CULVERT ENDWALLS WITH 45° WINGS

DIMENSIONS							QUANTITIES IN ONE ENDWALL			
Opening		Wall				Footing	Concrete, Class I			Steel Tie Bars
							Total (CY)			
D	Area (ft^2)	H	G	L	M	F	RCP	CMP	CIP	
15"	1.2	2'-3"	3'-7"	1'-0"	1'-3"	1'-3"	0.56	0.59	0.59	none
18"	1.8	2'-6"	3'-10"	1'-2"	1'-7"	1'-3"	0.74	0.77	0.77	none
24"	3.1	3'-0"	4'-4"	1'-5"	2'-1"	1'-4"	1.01	1.06	1.06	2 -#6 Bars x 2'-0"
30"	4.9	3'-6"	4'-10"	1'-9"	2'-5"	1'-6"	1.32	1.40	1.39	2 -#6 Bars x 2'-0"
36"	7.1	4'-0"	5'-4"	2'-0"	2'-11"	1'-8"	1.72	1.83	1.82	2 -#6 Bars x 2'-6"
42"	9.6	4'-6"	5'-10"	2'-3"	3'-6"	2'-0"	2.34	2.47		2 -#6 Bars x 2'-6"
48"	12.6	5'-0"	6'-4"	2'-6"	4'-0"	2'-0"	2.74	2.90		2 -#6 Bars x 2'-6"

GENERAL NOTES

1. Winged concrete endwalls are intended for use outside the clear zone.
2. Chamfer all exposed edges ¾".
3. Concrete shall be Class I, except ASTM C478 (4000 psi) Concrete may be substituted for precast items manufactured in plants meeting the requirements of Section 449 of the Specifications.
4. Endwall to be paid for under the contract unit price for Class I Concrete.
5. Sodding to be in accordance with Index No. 281, and paid for under the contract unit price for Performance Turf, SY.

C:\d\projects\standards\roadway\00200-s\00266-01.dgn
rd960rh
1:54:12 PM
6/28/2012

LAST REVISION	REVISION	DESCRIPTION:				
07/01/09			FDOT DESIGN STANDARDS 2013	WINGED CONCRETE ENDWALLS SINGLE ROUND PIPE	INDEX NO. 266	SHEET NO. 1

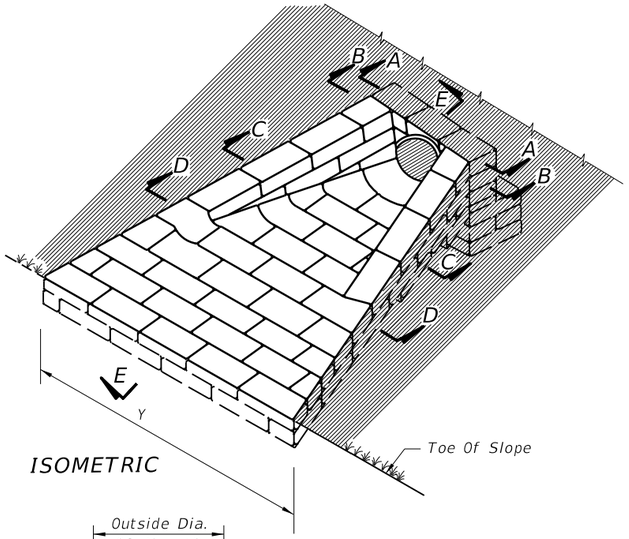

ISOMETRIC

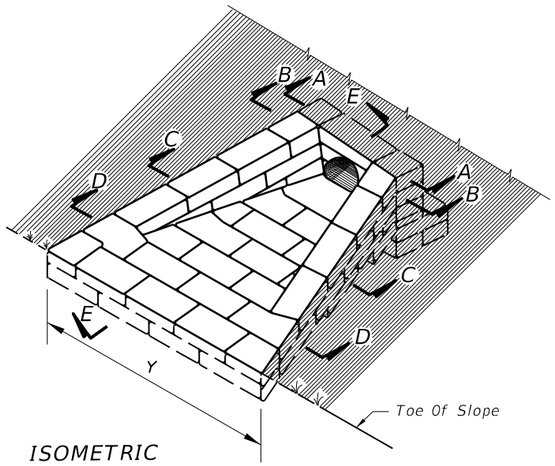

ISOMETRIC

GENERAL NOTES

1. U-Type Sand-Cement Endwalls Are Intended For Use Outside The Clear Zone.

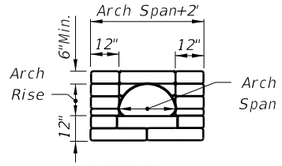

SECTION AA

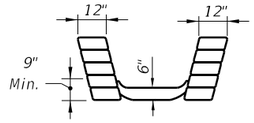

SECTION BB

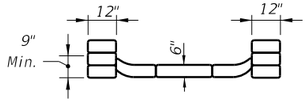

SECTION CC

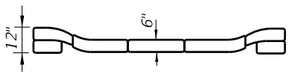

SECTION DD

Place Plastic Filter Fabric Type D-4 (See Index No. 199) Around And Below Sand-Cement Riprap. Cost Of Fabric To Be Included In Cost Of Sand-Cement Riprap

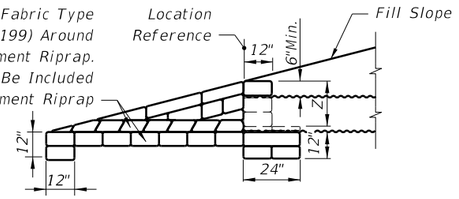

SECTION EE

DETAILS FOR SINGLE METAL PIPE ARCH CULVERTS

NOTE: For multiple metal pipe arch culvert spacing between arch centers=X

DIMENSIONS AND QUANTITIES FOR METAL PIPE ARCH CULVERTS

Span	Rise	Dimensions						Quantity Of Sand-Cement Riprap In Cu. Yds. For One Endwall							
		X	Y				Z	For 1:2 Slopes				For 1:4 Slopes			
			1-Arch	2-Arch	3-Arch	4-Arch		1-Arch	2-Arch	3-Arch	4-Arch	1-Arch	2-Arch	3-Arch	4-Arch
17"	13"	2'-6"	6'-6"	9'-0"	11'-6"	14'-0"	1'-7"	1.0	1.5	2.0	2.5	1.5	2.2	2.9	3.6
21"	15"	2'-10"	7'-6"	10'-4"	13'-2"	16'-0"	1'-9"	1.2	1.8	2.4	3.0	1.9	2.7	3.5	4.3
28"	20"	3'-5"	9'-3"	12'-8"	16'-1"	19'-6"	2'-0"	1.7	2.5	3.3	4.1	2.6	3.7	4.8	5.9
35"	24"	4'-0"	11'-0"	15'-0"	19'-0"	23'-0"	2'-0"	2.2	3.1	4.0	4.9	3.4	4.7	6.0	7.3
42"	29"	4'-9"	12'-9"	17'-6"	22'-3"	27'-0"	2'-0"	2.9	4.1	5.3	6.5	4.5	6.1	7.7	9.3
49"	33"	5'-6"	14'-6"	20'-0"	25'-6"	31'-0"	2'-0"	3.5	4.9	6.3	7.7	5.5	7.4	9.3	11.2
57"	38"	6'-4"	16'-6"	22'-10"	29'-2"	35'-6"	2'-0"	4.4	6.1	7.8	9.5	6.9	9.2	11.5	13.8
64"	43"	7'-1"	18'-3"	25'-4"	32'-5"	39'-6"	2'-0"	5.1	7.0	8.9	10.8	8.1	10.7	13.3	15.9
71"	47"	7'-10"	20'-0"	27'-10"	35'-8"	43'-6"	2'-0"	5.9	8.1	10.3	12.5	9.5	12.4	15.3	18.2

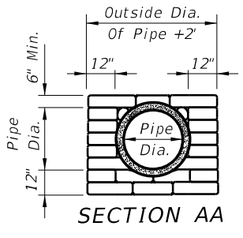

SECTION AA

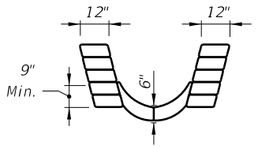

SECTION BB

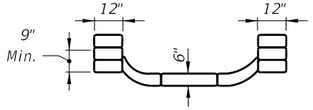

SECTION CC

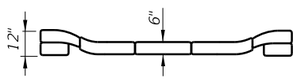

SECTION DD

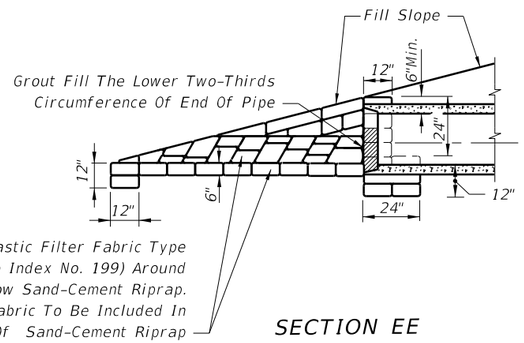

SECTION EE

DETAIL FOR SINGLE PIPE CULVERT

Note: For multiple pipe culvert spacing between pipe centers=X

DIMENSIONS AND QUANTITIES FOR ROUND PIPE CULVERTS

Pipe Dia.	Dimensions					Quantity Of Sand-Cement Riprap In Cu. Yds. For One Endwall							
	X	Y				For 1:2 Slopes				For 1:4 Slopes			
		1-Pipe	2-Pipes	3-Pipes	4-Pipes	1-Pipe	2-Pipes	3-Pipes	4-Pipes	1-Pipe	2-Pipes	3-Pipes	4-Pipes
15"	2'-7"	7'-0"	9'-7"	12'-2"	14'-9"	1.2	1.6	2.1	2.6	1.7	2.4	3.0	3.6
18"	2'-10"	8'-0"	10'-10"	13'-8"	16'-6"	1.4	2.0	2.6	3.1	2.1	2.9	3.7	4.4
24"	3'-5"	10'-0'	13'-5"	16'-10"	20'-3"	1.9	2.7	3.5	4.3	2.9	4.0	5.1	6.3
30"	4'-3"	12'-0"	16'-3"	20'-6"	24'-9"	2.5	3.6	4.8	5.9	3.8	5.4	7.0	8.6
36"	5'-1"	14'-0"	19'-1"	24'-2"	29'-3"	3.1	4.6	6.2	7.7	4.8	7.0	9.2	11.4
42"	6'-0"	16'-0"	22'-0"	28'-0"	34'-0"	3.8	5.8	7.7	9.7	6.0	8.8	11.7	14.5
48"	6'-9"	18'-0"	24'-9"	31'-6"	38'-3"	4.5	7.0	9.4	11.8	7.2	10.8	14.3	17.9
54"	7'-8"	20'-0"	27'-8"	35'-4"	43'-0"	5.3	8.3	11.3	14.2	8.5	12.9	17.3	21.7
60"	8'-6"	22'-0"	30'-6"	39'-0"	47'-6"	6.2	9.7	13.3	16.9	10.0	15.3	20.6	25.9

C:\d\projects\standards\roadway\00200-s\00268-01.dgn
rd960rh
1:54:15 PM
6/28/2012

LAST REVISION	REVISION	DESCRIPTION:			INDEX NO.	SHEET NO.
00			FDOT DESIGN STANDARDS 2013	U-TYPE SAND-CEMENT ENDWALLS	268	1

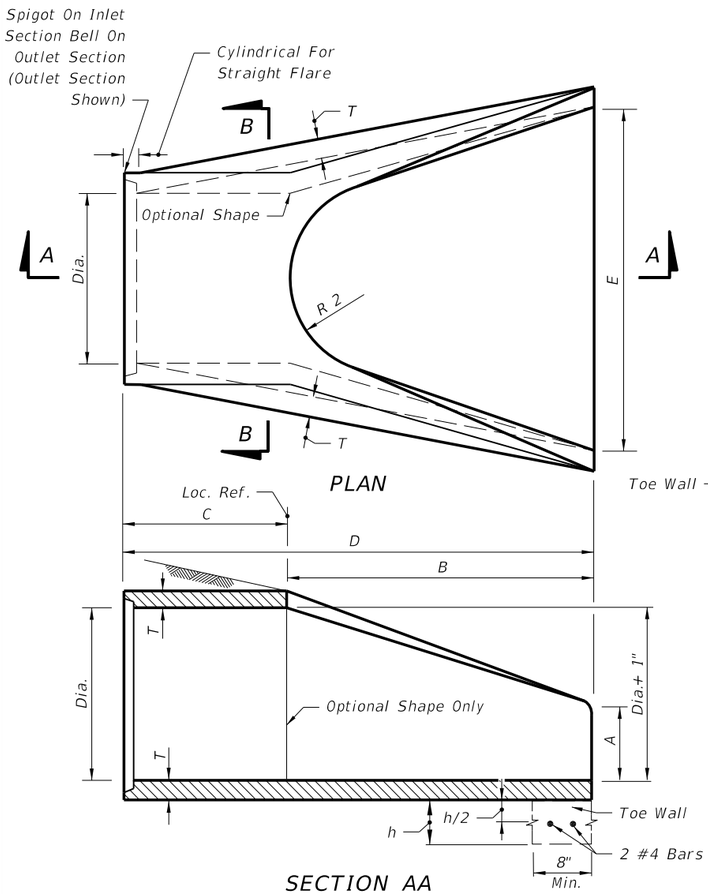

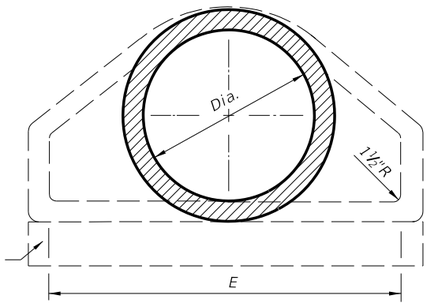

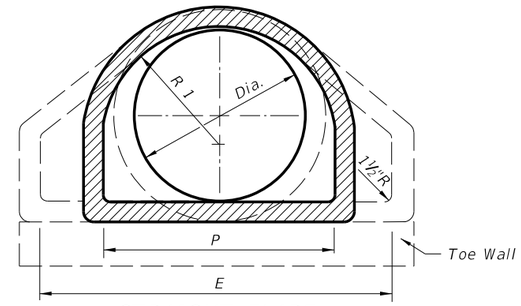

FLARED END SECTION

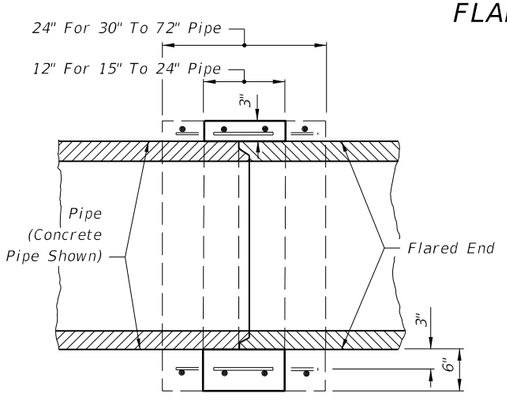

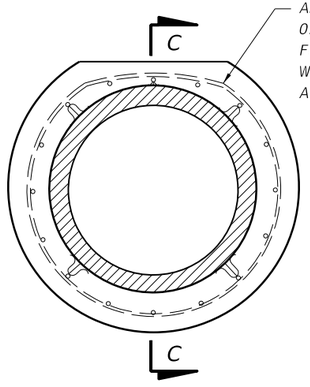

REINFORCED CONCRETE JACKET DETAIL

DIA.	T	REINF. (in²/ft)	BELL Or Spigot	A	B	C	D	E	P	R 1	R 2	FLAT	WEIGHT (lb)	h	TOE WALL CLASS I CONC (CY)
12"	2"	0.07	1½"	4"	2'-0"	4'-0⅞"	6'-0⅞"	2'-0"	19 15/16"	10⅛"	9"	3½"	530	12"	.06
15"	2¼"	0.07	2"	6"	2'-3"	3'-10"	6'-1"	2'-6"	24 3/16"	12½"	11"	3½"	740	12"	.07
18"	2½"	0.07	2½"	9"	2'-3"	3'-10"	6'-1"	3'-0"	29"	15½"	12"	4"	990	15"	.11
21"	2¾"	0.07	2¼"	9"	2'-11"	3'-2"	6'-1"	3'-6"	31⅝"	16⅛"	13"	4"	1280	15"	.12
24"	3"	0.07	2½"	9½"	3'-7½"	2'-6"	6'-1½"	4'-0"	33 3/16"	16 13/16"	14"	4½"	1520	18"	.17
27"	3¼"	0.148	2½"	10½"	4'-0"	2'-1½"	6'-1½"	4'-6"	36"	18 9/16"	14½"	4½"	1930	18"	.19
30"	3½"	0.148	3"	1'-0"	4'-6"	1'-7¾"	6'-1¾"	5'-0"	37"	18½"	15"	5"	2190	21"	.24
36"	4"	0.148	3½"	1'-3"	5'-3"	2'-10¾"	8'-1¾"	6'-0"	47 13/16"	24 5/16"	20"	5½"	4100	21"	.29
42"	4½"	0.148	3¾"	1'-9"	5'-3"	2'-11"	8'-2"	6'-6"	53⅞"	27½"	22"	5½"	5380	24"	.36
48"	5"	0.148	4¼"	2'-0"	6'-0"	2'-2"	8'-2"	7'-0"	56½"	28½"	22"	5¾"	6550	24"	.39
54"	5½"	0.174	4¾"	2'-3"	5'-5"	2'-11"	8'-4"	7'-6"	65½"	33⅛"	24"	6¼"	8040	24"	.42
60"	6"	0.174	5"	2'-6"	5'-0"	3'-3"	8'-3"	8'-0"	72½"	36 11/16"	24"	6¾"	8750	24"	.44
66"	6½"	0.174	5½"	2'-0"	6'-6"	1'-9"	8'-3"	8'-6"	72"	36⅛"	24"	7¼"	10630	24"	.47
72"	7"	0.174	6"	2'-0"	6'-6"	1'-9"	8'-3"	9'-0"	77 13/16"	38 15/16"	24"	7¾"	12520	24"	.50

GENERAL NOTES

1. Flared end sections shall conform to the requirements of ASTM C76 with the exception that dimensions and reinforcement shall be as prescribed in the table above. Circumferential reinforcement may consist of either one cage or two cages of steel. Compressive strength of concrete shall be 4000 psi. Shop drawings for flared end sections having dimensions other than above must be submitted for approval to the State Drainage Engineer.

2. Connections between the flared end section and the pipe culvert may be any of the following types unless otherwise shown on the plans.

   a. Joints meeting the requirements of Section 449 of the Standard Specifications (O-Ring Gasket). Flared end section joint dimensions and tolerances shall be identical or compatible to those used in the pipe culvert joint. When pipe culvert and flared end section manufacturers are different, the compatibility of joint designs shall be certified to by the manufacturer of the flared end sections.

   b. Joints sealed with preformed plastic gaskets. The gaskets shall meet the requirements of Section 942-2 of the Standard Specifications and the minimum sizes for gaskets shall be as that specified for equivalent sizes of elliptical pipe.

   c. Reinforced concrete jackets, as detailed on this drawing. Cost of the reinforced concrete jacket to be included in the contract unit price for the flared end section. When non-coated corrugated metal pipe is called for in the plans, the pipe shall be bituminous coated in the jacketed area as specified on Index No. 280. Bituminous coating to be included in the contract unit price for the pipe culvert. Concrete jacket shall be as specified on Index No. 280. Cost of concrete and reinforcement shall be included in the contract unit price for the pipe culvert.

3. Toe walls shall be constructed when shown on the plans or at locations designated by the Engineer. Toe walls are to be cast-in-place with Class I Concrete and paid for under the contract unit price for Flared End Section (Concrete), EA. Reinforcing steel shall also be included in the cost of the Flared End Section (Concrete), EA.

4. On skewed pipe culverts the flared end sections shall be placed in line with the pipe culvert. Side slopes shall be warped as required to fit the flared end sections.

5. Flared End Section to be paid for under the contract unit price for Flared End Section (Concrete), EA. Sodding shall be in accordance with Index No. 281, and paid for under the contract unit price for Performance Turf, SY.

DESIGN NOTES

1. Flared end sections are intended for use outside the clear zone on median drain and cross drain installation, except that flared end sections for pipe sizes 12" and 15" are permitted within the clear zone. When the slope intersection permits, 12" and 15" flared end sections may be located with the culvert opening as close as 8' beyond the outside edge of the shoulder. Flared end sections are not intended for side drain installations.

2. Reinforced concrete jackets shall be used at all locations where high velocities and/or highly erosive soils may cause disjointing. These locations are to be shown on the plans.

3. Toe walls shall be used whenever the anticipated velocity of discharge and soil type are such that erosive action would occur. Toe walls are not required where ditch pavement is provided, except when disjointing would occur if the ditch pavement should fail.

C:\d*projects\standards\roadway\00200-s\00270-01.dgn rd960rh 1:54:17 PM 6/28/2012

LAST REVISION	REVISION	DESCRIPTION:	FDOT DESIGN STANDARDS 2013	FLARED END SECTION	INDEX NO.	SHEET NO.
07/01/09					270	1

DIMENSIONS AND QUANTITIES

	D	X	A	B	C	E	F	G	H ■	M Single Pipe	M Double Pipe	M Triple Pipe	M Quad. Pipe	N	5½" CONCRETE SLAB (CY) ◪ Single Pipe	5½" CONCRETE SLAB (CY) ◪ Double Pipe	5½" CONCRETE SLAB (CY) ◪ Triple Pipe	5½" CONCRETE SLAB (CY) ◪ Quad. Pipe	SODDING (SY) Single Pipe	SODDING (SY) Double Pipe	SODDING (SY) Triple Pipe	SODDING (SY) Quad. Pipe
1:2 Slope	15"	2'-7"	1.92'	2.18'	4.10'	2.06'	5'	1.22'	2.9'	4.63'	7.21'	9.79'	12.37'	1.19'	0.38	0.58	0.77	0.96	21	24	27	30
	18"	2'-10"	1.97'	2.74'	4.71'	2.56'	6'	1.41'	3.4'	4.92'	7.75'	10.58'	13.42'	1.21'	0.44	0.65	0.87	1.09	22	25	28	31
	24"	3'-5"	2.06'	3.85'	5.91'	3.56'	7'	1.73'	3.4'	5.50'	8.92'	12.33'	15.75'	1.25'	0.54	0.83	1.12	1.42	24	28	32	35
	30"	4'-3"	2.15'	4.95'	7.10'	4.56'	8'	2.00'	3.4'	6.08'	10.33'	14.58'	18.83'	1.29'	0.66	1.09	1.50	1.91	26	31	35	40
	36"	5'-1"	2.25'	6.08'	8.33'	5.56'	9'	2.24'	3.4'	6.67'	11.75'	16.83'	21.92'	1.33'	0.81	1.38	1.95	2.51	28	34	39	45
	42"	6'-0"	2.34'	7.21'	9.55'	6.56'	10'	2.45'	3.4'	7.25'	13.25'	19.25'	25.25'	1.38'	0.97	1.70	2.45	3.19	30	37	43	50
	48"	6'-9"	2.43'	8.33'	10.76'	7.56'	11'	2.65'	3.4'	7.83'	14.58'	21.33'	28.08'	1.42'	1.13	2.04	2.93	3.84	32	39	47	54
	54"	7'-8"	2.52'	9.44'	11.96'	8.56'	12'	2.83'	3.4'	8.42'	16.08'	23.75'	31.42'	1.46'	1.31	2.44	3.58	4.72	34	42	51	59
	60"	8'-6"	2.62'	10.56'	13.18'	9.56'	14'	3.00'	4.4'	9.00'	17.50'	26.00'	34.50'	1.50'	1.51	2.89	4.28	5.68	36	45	55	64
	66"	9'-2"	2.71'	11.68'	14.39'	10.56'	15'	3.18'	4.4'	9.58'	18.75'	27.92'	37.08'	1.54'	1.68	3.25	4.84	6.43	38	48	58	68
	72"	10'-0"	2.80'	12.80'	15.60'	11.56'	16'	3.30'	4.4'	10.16'	20.16'	30.16'	40.16'	1.58'	1.89	3.74	5.59	7.45	40	51	62	73
1:4 Slope	15"	2'-7"	2.27'	4.09'	6.36'	4.03'	8'	1.22'	4.0'	4.63'	7.21'	9.79'	12.37'	1.19'	0.57	0.87	1.15	1.44	23	26	29	32
	18"	2'-10"	2.36'	5.12'	7.48'	5.03'	9'	1.41'	4.0'	4.92'	7.75'	10.58'	13.42'	1.21'	0.66	0.99	1.31	1.65	25	28	31	35
	24"	3'-5"	2.53'	7.18' △	9.71'	7.03' △	11'	1.73'	4.0'	5.50'	8.92'	12.33'	15.75'	1.25'	0.85	1.30	1.75	2.20	28	32	36	40
	30"	4'-3"	2.70'	9.25'	11.95'	9.03'	13'	2.00'	4.0'	6.08'	10.33'	14.58'	18.83'	1.29'	1.10	1.74	2.39	3.05	31	36	41	46
	36"	5'-1"	2.87'	11.31' ◇	14.18'	11.03' ◇	15'	2.24'	4.0'	6.67'	11.75'	16.83'	21.92'	1.33'	1.32	2.21	3.08	3.96	34	40	46	52
	42"	6'-0"	3.05'	13.37'	16.42'	13.03'	17'	2.45'	4.0'	7.25'	13.25'	19.25'	25.25'	1.38'	1.58	2.76	3.91	5.09	38	44	51	58
	48"	6'-9"	3.22'	15.43'	18.65'	15.03'	19'	2.65'	4.0'	7.83'	14.58'	21.33'	28.08'	1.42'	1.85	3.30	4.73	6.17	41	48	56	63
	54"	7'-8"	3.39'	17.49'	20.88'	17.03'	21'	2.83'	4.0'	8.42'	16.08'	23.75'	31.42'	1.46'	2.14	3.95	5.77	7.58	44	52	61	69
	60"	8'-6"	3.56'	19.55'	23.11'	19.03'	23'	3.00'	4.0'	9.00'	17.50'	26.00'	34.50'	1.50'	2.45	4.66	6.87	9.07	47	56	66	75
	66"	9'-2"	3.73'	21.62'	25.35'	21.03'	25'	3.18'	4.0'	9.58'	18.75'	27.92'	37.08'	1.54'	2.88	5.54	8.18	10.84	49	59	69	80
	72"	10'-0"	3.91'	23.68'	27.59'	23.03'	27'	3.30'	4.0'	10.16'	20.16'	30.16'	40.16'	1.58'	3.54	6.61	9.87	13.13	52	63	74	85

◪ See General Note No. 5.
See Sheet 5 For 3" Slab Quantities

■ Values shown for estimating pipe quantities and are for information only.

B	E	
△ 6.42'	△ 6.25'	Dimensions permitted to allow use of 8' standard pipe lengths.
◇ 10.40'	◇ 10.10'	Dimensions permitted to allow use of 12' standard pipe lengths.

△ ◇ Concrete slab shall be deepened to form bridge across crown of pipe. See section below.

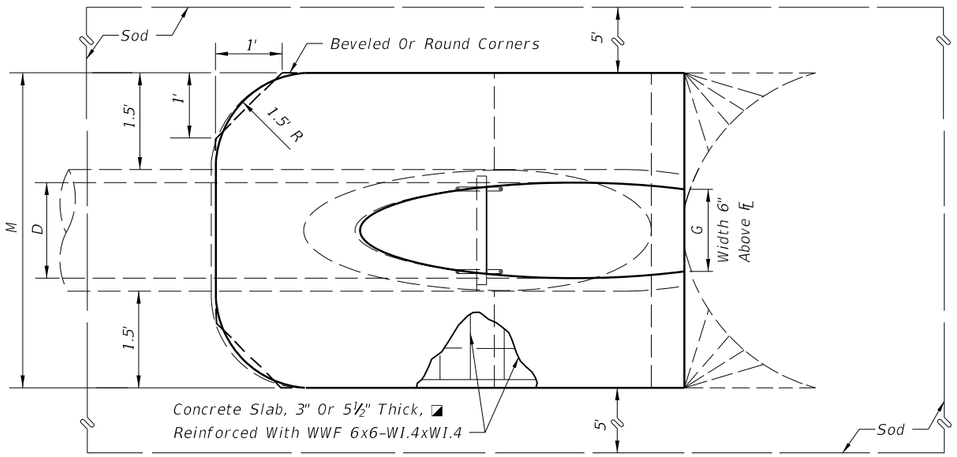

TOP-VIEW SINGLE PIPE

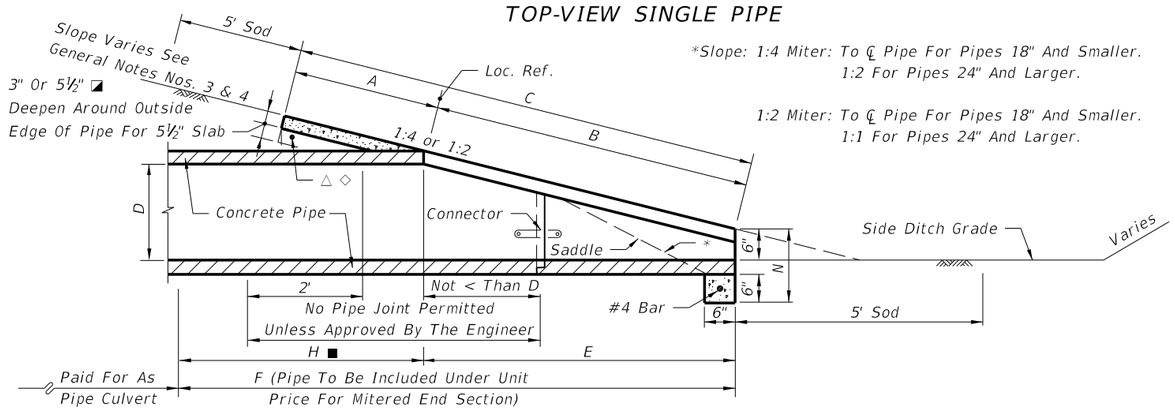

*Slope: 1:4 Miter: To ℄ Pipe For Pipes 18" And Smaller.
1:2 For Pipes 24" And Larger.

1:2 Miter: To ℄ Pipe For Pipes 18" And Smaller.
1:1 For Pipes 24" And Larger.

SECTION

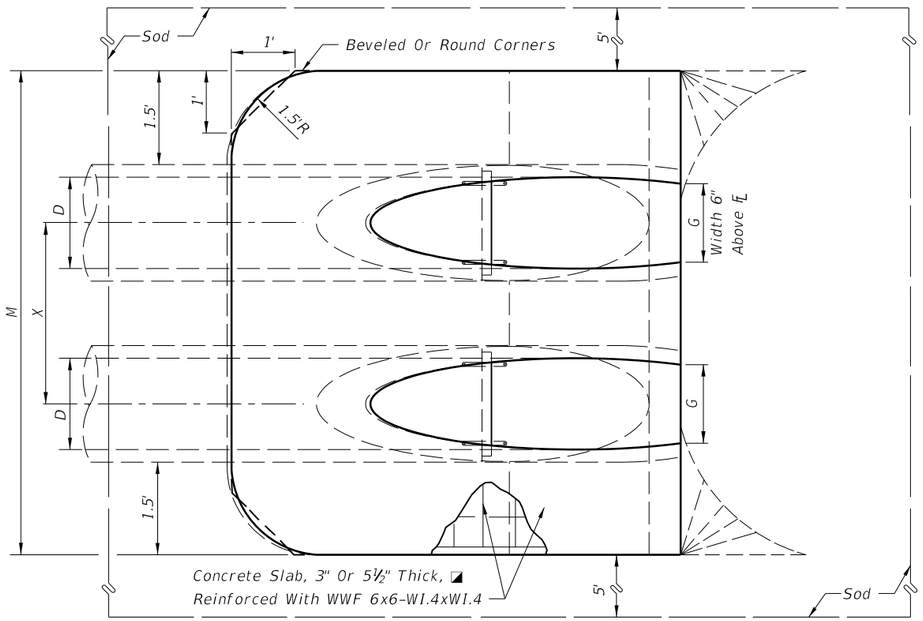

TOP-VIEW MULTIPLE PIPE

NOTE: See sheet 6 for details and notes.

SINGLE AND MULTIPLE ROUND CONCRETE PIPE

LAST REVISION	REVISION	DESCRIPTION:			INDEX NO.	SHEET NO.
02			FDOT DESIGN STANDARDS 2013	CROSS DRAIN MITERED END SECTION	272	1

6/28/2012 1:54:19 PM rd960rh C:\d\projects\standards\roadway\00200-s\00272-01.dgn

DIMENSIONS AND QUANTITIES

	D	X	A	B	C	E	F	G	H ■	M				N	5½" CONCRETE SLAB (CY) ◪				SODDING (SY)			
										Single Pipe	Double Pipe	Triple Pipe	Quad. Pipe		Single Pipe	Double Pipe	Triple Pipe	Quad. Pipe	Single Pipe	Double Pipe	Triple Pipe	Quad. Pipe
1:2 Slope	15"	2'-7"	2.5'	1.68'	4.18'	1.5'	5.0'	1.23'	3.5'	4.33'	6.92'	9.50'	12.08'	1.04'	0.35	0.54	0.74	0.94	21	24	27	29
	18"	2'-10"	2.5'	2.24'	4.74'	2.0'	6.0'	1.41'	4'	4.58'	7.42'	10.25'	13.08'	1.04'	0.38	0.62	0.87	1.12	22	25	28	31
	24"	3'-5"	2.5'	3.35'	5.85'	3.0'	7.0'	1.73'	4'	5.08'	8.50'	11.92'	15.33'	1.04'	0.47	0.76	1.05	1.34	23	27	31	35
	30"	4'-3"	2.5'	4.47'	6.97'	4.0'	8.0'	2.00'	4'	5.58'	9.83'	14.08'	18.33'	1.04'	0.57	0.96	1.37	1.77	25	30	35	39
	36"	5'-1"	2.5'	5.59'	8.09'	5.0'	9.0'	2.24'	4'	6.08'	11.17'	16.25'	21.33'	1.04'	0.67	1.19	1.72	2.26	27	33	38	44
	42"	6'-0"	2.5'	6.71'	9.21'	6.0'	10.0'	2.45'	4'	6.58'	12.58'	18.58'	24.58'	1.04'	0.78	1.48	2.17	2.87	29	36	42	49
	48"	6'-9"	2.5'	7.83'	10.33'	7.0'	11.0'	2.65'	4'	7.08'	13.83'	20.58'	27.33'	1.04'	0.89	1.71	2.54	3.36	31	38	46	53
	54"	7'-8"	2.5'	8.94'	11.44'	8.0'	12.0'	2.83'	4'	7.58'	15.25'	22.92'	30.58'	1.04'	1.02	2.06	3.10	4.14	33	41	50	58
	60"	8'-6"	2.5'	10.06'	12.56'	9.0'	13.0'	3.00'	4'	8.08'	16.58'	25.08'	33.58'	1.04'	1.14	2.38	3.63	4.89	34	44	53	63
1:4 Slope	15"	2'-7"	2.5'	3.09'	5.59'	3.0'	7.0'	1.23'	4'	4.33'	6.92'	9.50'	12.08'	1.04'	0.44	0.68	0.91	1.15	22	25	28	31
	18"	2'-10"	2.5'	4.12'	6.62'	4.0'	8.0'	1.41'	4'	4.58'	7.42'	10.25'	13.08'	1.04'	0.49	0.77	1.03	1.31	24	27	30	33
	24"	3'-5"	2.5'	6.18'	8.68'	6.0'	10.0'	1.73'	4'	5.08'	8.50'	11.92'	15.33'	1.04'	0.65	1.09	1.38	1.77	27	30	34	38
	30"	4'-3"	2.5'	8.25'	10.75'	8.0'	12.0'	2.00'	4'	5.58'	9.83'	14.08'	18.33'	1.04'	0.81	1.34	1.90	2.44	29	34	39	44
	36"	5'-1"	2.5'	10.31'	12.81'	10.0'	14.0'	2.24'	4'	6.08'	11.17'	16.25'	21.33'	1.04'	0.97	1.68	2.41	3.14	32	38	44	49
	42"	6'-0"	2.5'	12.37'	14.87'	12.0'	16.0'	2.45'	4'	6.58'	12.58'	18.58'	24.58'	1.04'	1.13	2.08	3.06	4.02	35	42	48	55
	48"	6'-9"	2.5'	14.43'	16.93'	14.0'	18.0'	2.65'	4'	7.08'	13.83'	20.58'	27.33'	1.04'	1.29	2.49	3.69	4.88	38	46	53	60
	54"	7'-8"	2.5'	16.49'	18.99'	16.0'	20.0'	2.83'	4'	7.58'	15.25'	22.92'	30.58'	1.04'	1.48	2.98	4.47	5.98	41	49	58	66
	60"	8'-6"	2.5'	18.55'	21.05'	18.0'	22.0'	3.00'	4'	8.08'	16.58'	25.08'	33.58'	1.04'	1.66	3.49	5.31	7.13	44	53	63	72

◪ See General Note No. 5. See Sheet 5 For 3" Slab Quantities

■ Values shown for estimating pipe quantities and are for information only

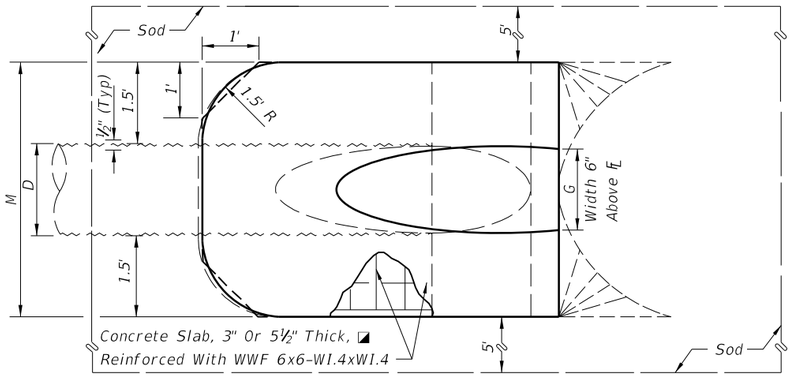

TOP VIEW-SINGLE PIPE

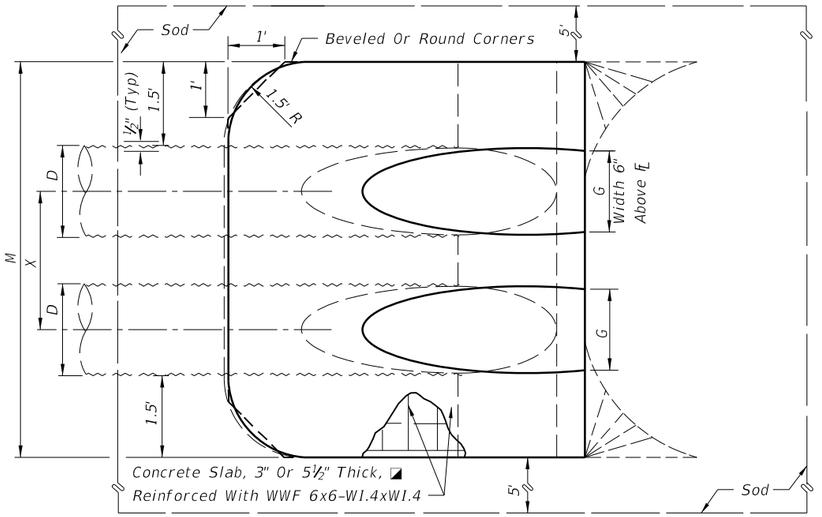

TOP VIEW-MULTIPLE PIPE

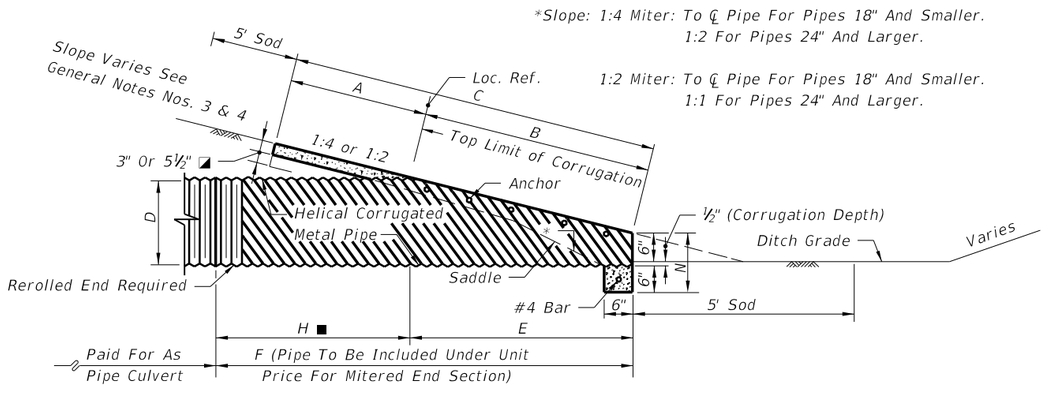

SECTION

*Slope: 1:4 Miter: To ℄ Pipe For Pipes 18" And Smaller.
1:2 For Pipes 24" And Larger.

1:2 Miter: To ℄ Pipe For Pipes 18" And Smaller.
1:1 For Pipes 24" And Larger.

NOTE: See Sheet 6 For Details And Notes.

SINGLE AND MULTIPLE ROUND CORRUGATED METAL PIPE

LAST REVISION	REVISION	DESCRIPTION:				
02			FDOT DESIGN STANDARDS 2013	CROSS DRAIN MITERED END SECTION	INDEX NO. 272	SHEET NO. 2

C:\d\projects\standards\roadway\00200-s\00272-02.dgn
rd960rh
1:54:22 PM
6/28/2012

1974 AASHTO — DIMENSIONS AND QUANTITIES

	SPAN	RISE	X	A	B	C	E	F	G	H ■	M				N	5½" CONCRETE SLAB (CY) ◪				SODDING (SY)			
											Single Pipe	Double Pipe	Triple Pipe	Quad. Pipe		Single Pipe	Double Pipe	Triple Pipe	Quad. Pipe	Single Pipe	Double Pipe	Triple Pipe	Quad. Pipe
1:2 Slope	17"	13"	2'-6"	2.5'	1.30'	3.80'	1.17'	4'	1.39'	2.8'	4.50'	7.00'	9.50'	12.00'	1.04'	0.41	0.61	0.81	1.02	21	23	26	29
	21"	15"	2'-10"	2.5'	1.68'	4.17'	1.50'	5'	1.76'	3.5'	4.83'	7.67'	10.50'	13.33'	1.04'	0.43	0.66	0.88	1.10	22	25	28	31
	28"	20"	3'-5"	2.5'	2.61'	5.11'	2.33'	6'	2.22'	3.7'	5.42'	8.83'	12.25'	15.67'	1.04'	0.51	0.78	1.06	1.33	23	27	30	34
	35"	24"	4'-0"	2.5'	3.35'	5.85'	3.00'	7'	2.55'	4.0'	6.00'	10.00'	14.00'	18.00'	1.04'	0.57	0.90	1.22	1.55	24	29	33	38
	42"	29"	4'-9"	2.5'	4.29'	6.79'	3.83'	8'	2.97'	4.2'	6.58'	11.33'	16.08'	20.83'	1.04'	0.64	1.04	1.46	1.87	26	31	37	42
	49"	33"	5'-6"	2.5'	5.03'	7.53'	4.50'	9'	3.34'	4.5'	7.17'	12.67'	18.17'	23.67'	1.04'	0.73	1.23	1.72	2.22	28	34	40	46
	57"	38"	6'-4"	2.5'	5.96'	8.46'	5.33'	10'	3.65'	4.7'	7.83'	14.17'	20.50'	26.83'	1.04'	0.83	1.44	2.04	2.64	29	36	44	51
	64"	43"	7'-1"	2.5'	6.89'	9.39'	6.17'	11'	3.89'	4.8'	8.42'	15.50'	22.58'	29.67'	1.04'	0.95	1.67	2.39	3.11	31	39	47	55
	71"	47"	7'-10"	2.5'	7.64'	10.14'	6.83'	12'	4.14'	5.2'	9.00'	16.83'	24.67'	32.50'	1.04'	1.05	1.89	2.74	3.57	33	41	50	59
1:4 Slope	17"	13"	2'-6"	2.5'	2.41'	4.91'	2.33'	7'	1.39'	4.7'	4.50'	7.00'	9.50'	12.00'	1.04'	0.48	0.71	0.95	1.18	22	25	27	30
	21"	15"	2'-10"	2.5'	3.09'	5.59'	3.00'	8'	1.76	5.0'	4.83'	7.67'	10.50'	13.33'	1.04'	0.52	0.80	1.09	1.31	23	26	29	32
	28"	20"	3'-5"	2.5'	4.81'	7.31'	4.67'	9'	2.22'	4.3'	5.42'	8.83'	12.25'	15.67'	1.04'	0.61	0.92	1.27	1.59	25	29	33	37
	35"	24"	4'-0"	2.5'	6.18'	8.68'	6.00'	11'	2.55'	5.0'	6.00'	10.00'	14.00'	18.00'	1.04'	0.73	1.14	1.55	1.97	28	32	37	41
	42"	29"	4'-9"	2.5'	7.90'	10.40'	7.67'	12'	2.97'	4.3'	6.58'	11.33'	16.08'	20.83'	1.04'	0.87	1.39	1.92	2.45	30	35	41	46
	49"	33"	5'-6"	2.5'	9.28'	11.78'	9.00'	14'	3.34'	5.0'	7.17'	12.67'	18.17'	23.67'	1.04'	1.00	1.66	2.30	2.96	32	38	45	51
	57"	38"	6'-4"	2.5'	11.00'	13.50'	10.67'	16'	3.65'	5.3'	7.83'	14.17'	20.50'	26.83'	1.04'	1.18	2.00	2.82	3.64	35	42	49	56
	64"	43"	7'-1"	2.5'	12.71'	15.21'	12.33'	17'	3.89'	4.7'	8.42'	15.50'	22.58'	29.67'	1.04'	1.36	2.39	3.38	4.38	38	45	53	61
	71"	47"	7'-10"	2.5'	14.09'	16.59'	13.67'	19'	4.14'	5.3'	9.00'	16.83'	24.67'	32.50'	1.04'	1.50	2.65	3.81	4.97	40	48	57	66

◪ See General Note No. 5.
See Sheet 5 For 3" Slab Quantities

■ Values shown for estimating pipe quantities and are for information.

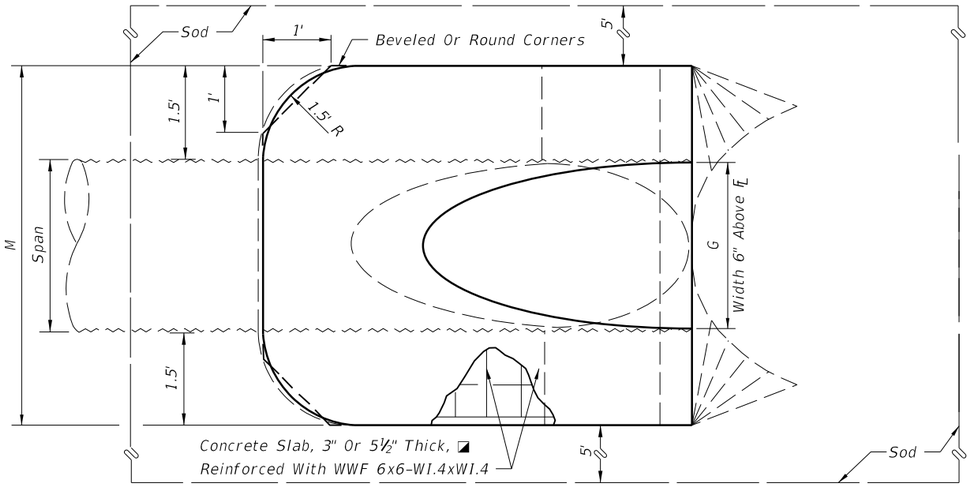

TOP VIEW-SINGLE PIPE

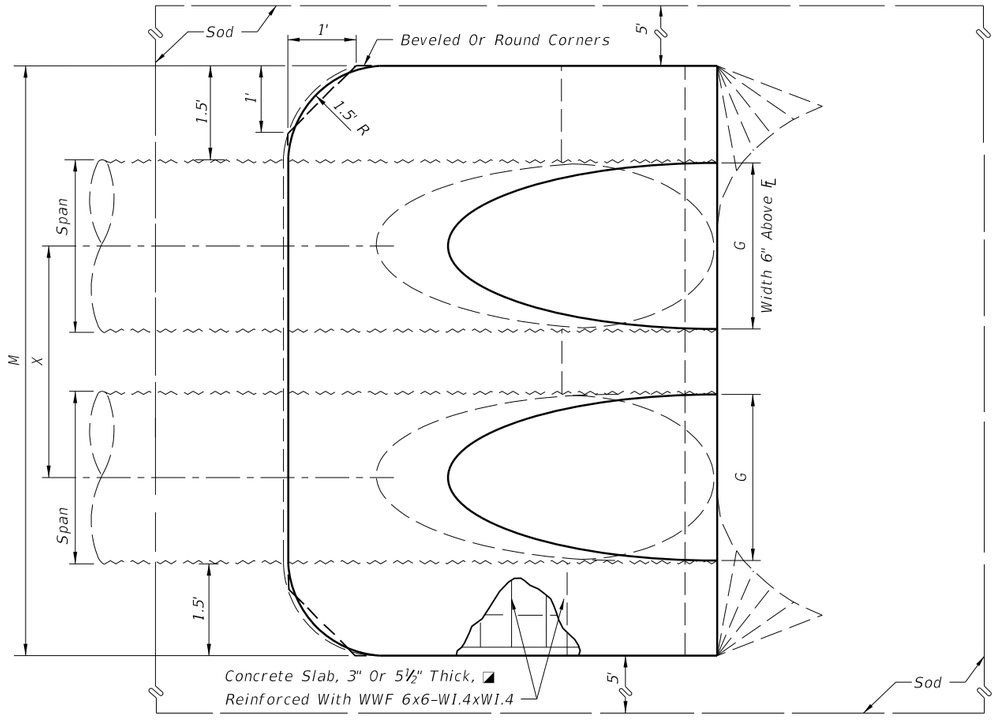

TOP VIEW-MULTIPLE PIPE

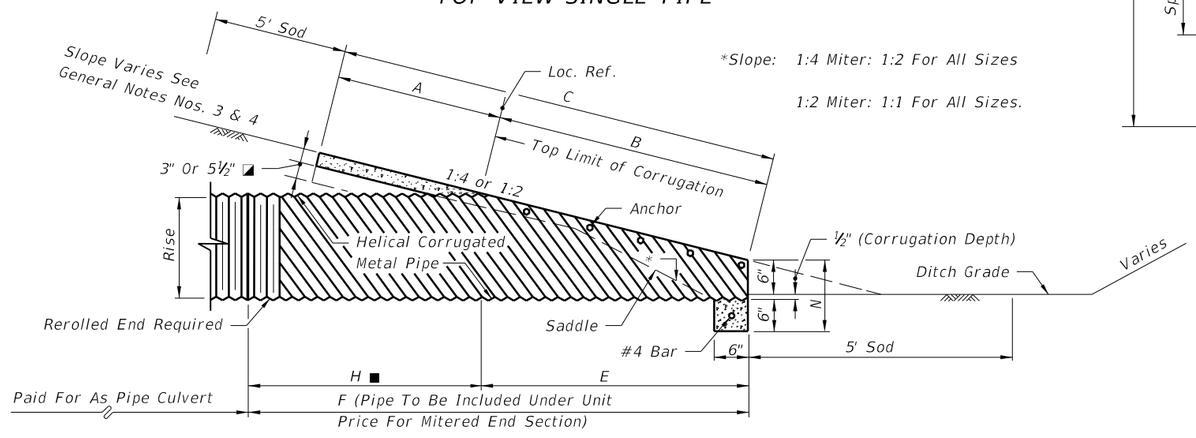

SECTION

*Slope: 1:4 Miter: 1:2 For All Sizes
1:2 Miter: 1:1 For All Sizes.

NOTE: See Sheet 6 For Details And Notes.

SINGLE AND MULTIPLE CORRUGATED METAL PIPE-ARCH

LAST REVISION	REVISION	DESCRIPTION:			INDEX NO.	SHEET NO.
02			FDOT DESIGN STANDARDS 2013	CROSS DRAIN MITERED END SECTION	272	3

6/28/2012 1:54:24 PM rd960rh C:\d\projects\standards\roadway\00200-s\00272-03.dgn

DIMENSIONS & QUANTITIES

	Rise R	Span S	X	A	B	C	E	F	G	H ■	M				N	5½" CONC. SLAB (CY) ◪				SODDING (SY)			
											Single Pipe	Double Pipe	Triple Pipe	Quad. Pipe		Single Pipe	Double Pipe	Triple Pipe	Quad. Pipe	Single Pipe	Double Pipe	Triple Pipe	Quad. Pipe
1:2 Slope	12"	18"	2'-10"	1.97'	1.62'	3.59'	1.56'	4'	1.50'	2.4'	4.92'	7.75'	10.58'	13.42'	1.21'	0.30	0.49	0.67	0.85	21	24	27	30
	14"	23"	3'-4"	2.01'	1.99'	4.00'	1.89'	5'	1.90'	3.1'	5.38'	8.71'	12.04'	15.38'	1.23'	0.37	0.59	0.81	1.02	22	26	29	33
	19"	30"	4'-0"	2.11'	2.92'	5.03'	2.73'	6'	2.37'	3.3'	6.04'	10.04'	14.04'	18.04'	1.27'	0.50	0.80	1.09	1.39	24	28	33	37
	24"	38"	5'-0"	2.20'	3.85'	6.05'	3.56'	7'	2.85'	3.4'	6.79'	11.79'	16.79'	21.79'	1.31'	0.62	1.03	1.45	1.86	26	31	37	42
	29"	45"	5'-11"	2.34'	4.79'	7.13'	4.39'	8'	3.19'	3.6'	7.50'	13.42'	19.33'	25.25'	1.38'	0.75	1.30	1.84	2.39	28	34	41	47
	34"	53"	7'-0"	2.43'	5.72'	8.15'	5.23'	9'	3.57'	3.8'	8.25'	15.25'	22.25'	29.25'	1.42'	0.90	1.61	2.32	3.03	30	37	45	53
	38"	60"	7'-10"	2.52'	6.46'	8.98'	5.89'	9'	3.95'	3.1'	8.92'	16.75'	24.58'	32.42'	1.46'	1.03	1.89	2.74	3.60	31	40	49	57
	43"	68"	8'-11"	2.62'	7.39'	10.01'	6.73'	10'	4.28'	3.3'	9.67'	18.58'	27.50'	36.42'	1.50'	1.19	2.26	3.33	4.40	33	43	53	63
	48"	76"	9'-11"	2.71'	8.33'	11.04'	7.56'	11'	4.59'	3.4'	10.42'	20.33'	30.25'	40.17'	1.54'	1.38	2.65	3.93	5.21	35	46	57	68
	53"	83"	10'-8"	2.80'	9.26'	12.06'	8.39'	12'	4.77'	3.6'	11.08'	21.75'	32.42'	43.08'	1.58'	1.55	3.03	4.50	5.96	37	49	61	73
	58"	91"	11'-8"	2.90'	10.19'	13.09'	9.23'	13'	5.01'	3.8'	11.83'	23.50'	35.17'	46.83'	1.63'	1.75	3.47	5.20	6.93	39	52	65	78
1:4 Slope	12"	18"	2'-10"	2.36'	3.06'	5.42'	3.03'	5'	1.50'	2.0'	4.92'	7.75'	10.58'	13.42'	1.21'	0.45	0.68	0.92	1.14	23	26	29	32
	14"	23"	3'-4"	2.44'	3.75'	6.19'	3.70'	6'	1.90'	2.3'	5.38'	8.71'	12.04'	15.38'	1.23'	0.53	0.83	1.13	1.42	24	28	32	35
	19"	30"	4'-0"	2.62'	5.47'	8.09'	5.36'	8'	2.37'	2.6'	6.04'	10.04'	14.04'	18.04'	1.27'	0.74	1.15	1.57	1.98	27	32	36	40
	24"	38"	5'-0"	2.79'	7.18'	9.97'	7.03'	10'	2.85'	3.0'	6.79'	11.79'	16.79'	21.79'	1.31'	0.97	1.57	2.19	2.81	30	36	41	47
	29"	45"	5'-11"	3.05'	8.90'	11.95'	8.70'	12'	3.19'	3.3'	7.50'	13.42'	19.33'	25.25'	1.38'	1.22	2.07	2.92	3.77	33	40	46	53
	34"	53"	7'-0"	3.22'	10.62'	13.84'	10.36'	13'	3.57'	2.6'	8.25'	15.25'	22.25'	29.25'	1.42'	1.48	2.62	3.77	4.92	36	44	52	59
	38"	60"	7'-10"	3.39'	11.99'	15.38'	11.70'	15'	3.95'	3.3'	8.92'	16.75'	24.58'	32.42'	1.46'	1.72	3.12	4.53	5.92	38	47	56	65
	43"	68"	8'-11"	3.56'	13.71'	17.27'	13.36'	17'	4.28'	3.6'	9.67'	18.58'	27.50'	36.42'	1.50'	2.02	3.78	5.56	7.32	41	51	61	71
	48"	76"	9'-11"	3.73'	15.43'	19.16'	15.03'	19'	4.59'	4.0'	10.42'	20.33'	30.25'	40.17'	1.54'	2.34	4.49	6.64	8.79	44	55	66	77
	53"	83"	10'-8"	3.91'	17.15'	21.06'	16.70'	20'	4.77'	3.3'	11.08'	21.75'	32.42'	43.08'	1.58'	2.66	5.17	7.66	10.16	47	59	71	83
	58"	91"	11'-8"	4.08'	18.87'	22.95'	18.36'	22'	5.01'	3.6'	11.83'	23.50'	35.17'	46.83'	1.63'	3.02	5.98	8.95	11.90	50	63	76	89

◪ See General Note No. 3.
See Sheet 5 For 3" Slab Quantities

■ Values shown for estimating pipe quantities and are for information only.

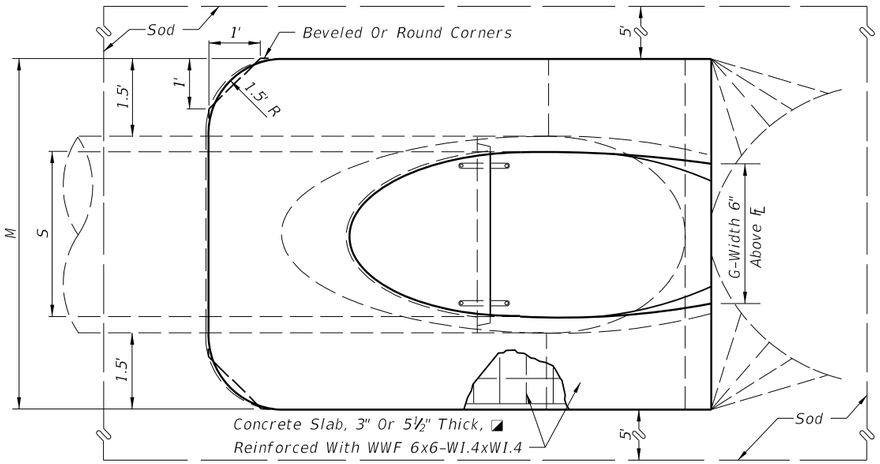

TOP VIEW-SINGLE PIPE

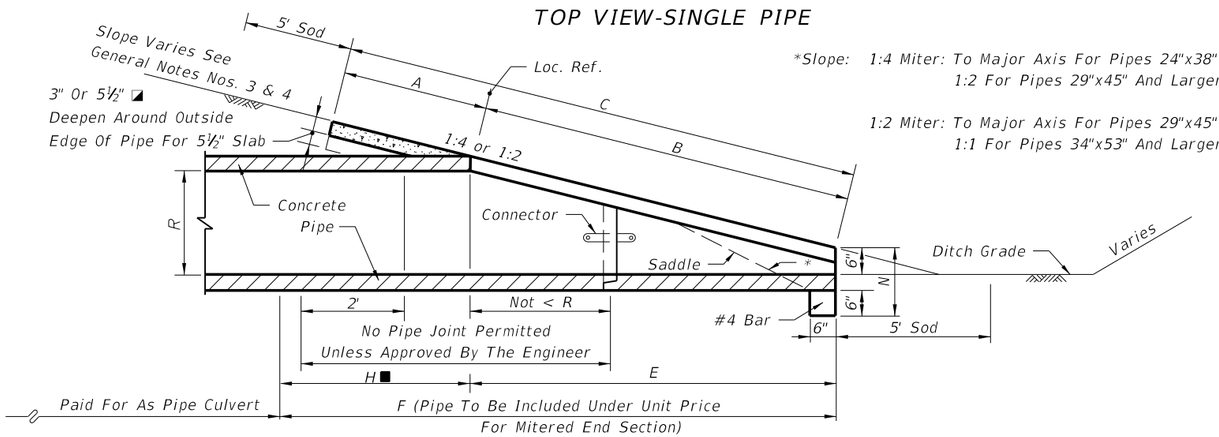

SECTION

*Slope: 1:4 Miter: To Major Axis For Pipes 24"x38" And Smaller.
1:2 For Pipes 29"x45" And Larger.

1:2 Miter: To Major Axis For Pipes 29"x45" And Smaller.
1:1 For Pipes 34"x53" And Larger.

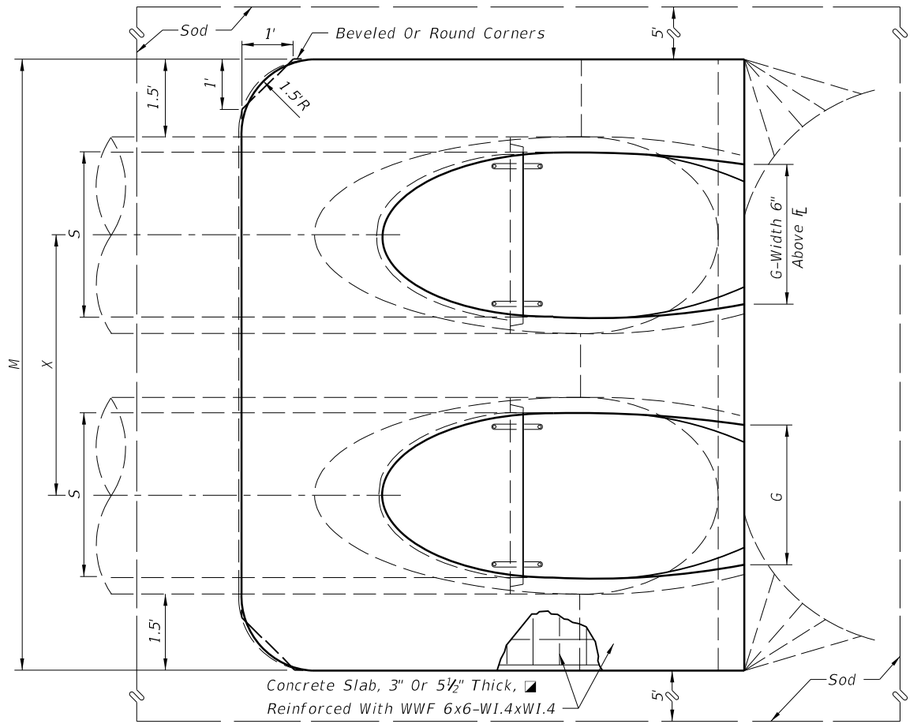

NOTE: See Sheet 6 For Details And Notes.

TOP VIEW - MULTIPLE PIPE

SINGLE AND MULTIPLE ELLIPTICAL CONCRETE PIPE

LAST REVISION	REVISION	DESCRIPTION:				
02			FDOT DESIGN STANDARDS 2013	CROSS DRAIN MITERED END SECTION	INDEX NO. 272	SHEET NO. 4

C:\d\projects\standards\roadway\00200-s\00272-04.dgn
rd960rh
1:54:26 PM
6/28/2012

QUANTITIES FOR 3" THICK CONCRETE SLABS (CY)

	D	ROUND-CONCRETE			
		Single Pipe	Double Pipe	Triple Pipe	Quad. Pipe
1:2 Slope	15"	0.27	0.41	0.54	0.67
	18"	0.31	0.45	0.60	0.75
	24"	0.39	0.59	0.79	1.00
	30"	0.46	0.76	1.04	1.32
	36"	0.55	0.94	1.33	1.71
	42"	0.66	1.15	1.66	2.15
	48"	0.76	1.37	1.96	2.57
	54"	0.87	1.62	2.38	3.14
	60"	0.99	1.90	2.81	3.73
	66"	1.11	2.15	3.21	4.27
	72"	1.24	2.46	3.68	4.90
1:4 Slope	15"	0.40	0.61	0.80	1.00
	18"	0.47	0.69	0.91	1.14
	24"	0.60	0.90	1.21	1.52
	30"	0.76	1.19	1.63	2.07
	36"	0.89	1.48	2.05	2.63
	42"	1.05	1.82	2.57	3.34
	48"	1.21	2.15	3.07	4.00
	54"	1.39	2.55	3.72	4.88
	60"	1.59	3.02	4.44	5.86
	66"	1.91	3.66	5.40	7.15
	72"	2.12	4.18	6.24	8.30

	D	ROUND-CMP			
		Single Pipe	Double Pipe	Triple Pipe	Quad. Pipe
1:2 Slope	15"	0.24	0.37	0.51	0.64
	18"	0.26	0.43	0.61	0.78
	24"	0.32	0.52	0.72	0.91
	30"	0.38	0.64	0.91	1.18
	36"	0.44	0.78	1.13	1.48
	42"	0.51	0.96	1.41	1.87
	48"	0.57	1.09	1.63	2.15
	54"	0.65	1.32	1.99	2.66
	60"	0.71	1.49	2.28	3.07
1:4 Slope	15"	0.31	0.47	0.63	0.79
	18"	0.34	0.53	0.71	0.90
	24"	0.44	0.69	0.92	1.18
	30"	0.53	0.88	1.25	1.60
	36"	0.62	1.07	1.53	2.00
	42"	0.71	1.30	1.92	2.52
	48"	0.80	1.54	2.29	3.02
	54"	0.91	1.83	2.74	3.67
	60"	1.02	2.15	3.27	4.39

	Span	Rise	CMP-ARCH			
			Single Pipe	Double Pipe	Triple Pipe	Quad. Pipe
1:2 Slope	17"	13"	0.33	0.49	0.65	0.81
	21"	15"	0.33	0.50	0.67	0.83
	28"	20"	0.37	0.56	0.76	0.95
	35"	24"	0.40	0.62	0.84	1.07
	42"	29"	0.43	0.70	0.98	1.25
	49"	33"	0.49	0.82	1.15	1.48
	57"	38"	0.55	0.95	1.35	1.75
	64"	43"	0.62	1.10	1.57	2.05
	71"	47"	0.69	1.24	1.80	2.35
1:4 Slope	17"	13"	0.38	0.56	0.74	0.92
	21"	15"	0.39	0.59	0.80	0.95
	28"	20"	0.43	0.64	0.88	1.10
	35"	24"	0.49	0.77	1.05	1.33
	42"	29"	0.57	0.92	1.27	1.62
	49"	33"	0.65	1.08	1.50	1.93
	57"	38"	0.76	1.30	1.83	2.37
	64"	43"	0.87	1.55	2.18	2.83
	71"	47"	0.95	1.68	2.43	3.17

	Rise	Span	ELLIPTICAL-CONCRETE			
			Single Pipe	Double Pipe	Triple Pipe	Quad. Pipe
1:2 Slope	12"	18"	0.19	0.33	0.45	0.57
	14"	23"	0.25	0.40	0.55	0.69
	19"	30"	0.34	0.55	0.75	0.95
	24"	38"	0.43	0.71	1.00	1.28
	29"	45"	0.52	0.90	1.27	1.65
	34"	53"	0.62	1.11	1.60	2.09
	38"	60"	0.70	1.29	1.87	2.46
	43"	68"	0.81	1.54	2.26	2.99
	48"	76"	0.93	1.79	2.66	3.53
	53"	83"	1.04	2.04	3.03	4.02
	58"	91"	1.17	2.33	3.49	4.66
1:4 Slope	12"	18"	0.30	0.45	0.61	0.76
	14"	23"	0.36	0.56	0.76	0.95
	19"	30"	0.51	0.79	1.08	1.36
	24"	38"	0.68	1.10	1.53	1.96
	29"	45"	0.86	1.45	2.04	2.63
	34"	53"	1.02	1.81	2.60	3.39
	38"	60"	1.18	2.14	3.10	4.05
	43"	68"	1.38	2.58	3.79	4.99
	48"	76"	1.59	3.05	4.51	5.97
	53"	83"	1.80	3.50	5.19	6.88
	58"	91"	2.04	4.04	6.05	8.05

C:\d\projects\standards\roadway\00200-s\00272-05.dgn
rd960rh
1:54:28 PM
6/28/2012

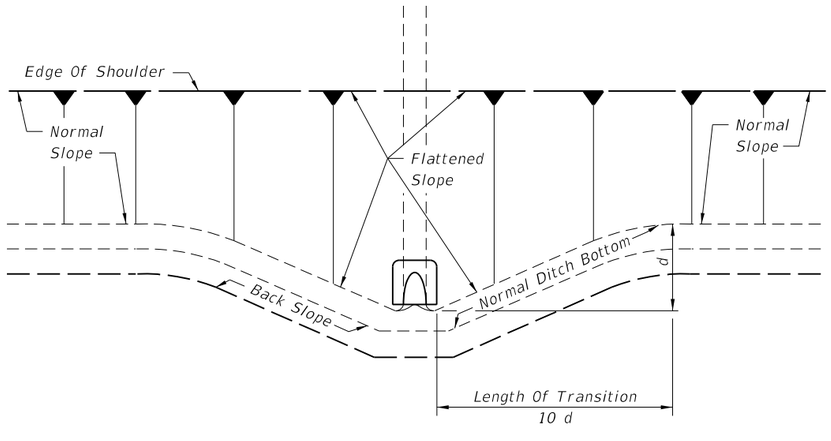

PLAN

NOTE: See General Note 4

SLOPE AND DITCH TRANSITIONS

GENERAL NOTES

1. Unless otherwise designated in the plans, concrete pipe mitered end sections may be used with any type of cross drain pipe; corrugated steel pipe mitered end sections may be used with any type of cross drain pipe except aluminum pipe; and, corrugated aluminum mitered end sections may be used with any type of cross drain pipe except steel pipe. When bituminous coated metal pipe is specified for cross drain pipe, mitered end sections shall be constructed with like pipe or concrete pipe. When the mitered end section pipe is dissimilar to the cross drain pipe, a concrete jacket shall be constructed in accordance with Standard Index 280.

2. Corrugated polyethylene pipe (HDPE), polyvinyl-chloride pipe (PVC) and polypropylene pipe (PPP) for cross drain applications shall utilize either corrugated metal or concrete mitered end sections (MES). When used in conjunction with corrugated (MES), connection shall be by either a formed metal band specifically designated to join HDPE or PVC pipe, with metal pipe or other coupler approved by the State Drainage Engineer. When used in conjunction with a concrete (MES), connection shall be by concrete jacket constructed in accordance with Index No. 280.

3. Mitered end sections for pipe sizes 15", 18" and 24" round or equivalent pipe arch or elliptical pipe are permitted within the clear zone. When the slope intersection permits, the mitered end section may be located with the culvert opening as close as 8' beyond the outside edge of the shoulder.

4. Slope and ditch transitions shall be used when the normal roadway slope must be flattened to place end section outside clear zone. See detail left.

5. The reinforced concrete slab shall be constructed for all sizes of cross drain pipe and cast in place with Class NS concrete. Slabs shall be 5½" thick unless 3" thickness called for in plans.

6. Concrete pipe used in the assembly of mitered end sections shall be selective lengths to avoid excessive connections.

7. Corrugated metal pipe galvanizing that is damaged during beveling and perforating for mitered end section shall be repaired.

8. That portion of corrugated metal pipe in direct contact with the concrete slab and extending 12" beyond shall be bituminous coated prior to placing of the concrete.

9. When existing multiple cross drain pipes are spaced other than the dimensions shown in this detail, or have non-parallel axes, or have non-uniform sections, the mitered end sections will be constructed either separately as single pipe mitered end sections or collectively as multiple pipe end sections as directed by the Engineer; however, mitered end sections will be paid for each based on each independent pipe end.

10. The cost of all pipe(s), fasteners, reinforcing, connectors, anchors, concrete, sealants, jackets, and coupling bands shall be included in the cost for the mitered end section. Sodding shall be paid for separately under the contract unit price of Performance Turf, SY.

11. Mitered end sections shall be paid for under the contract unit price for Mitered End Section (CD), Each, based on each independent pipe end.

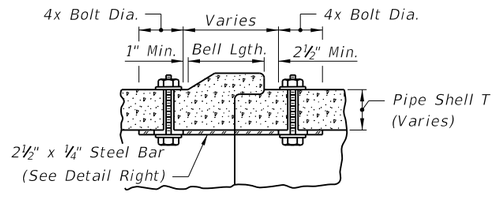

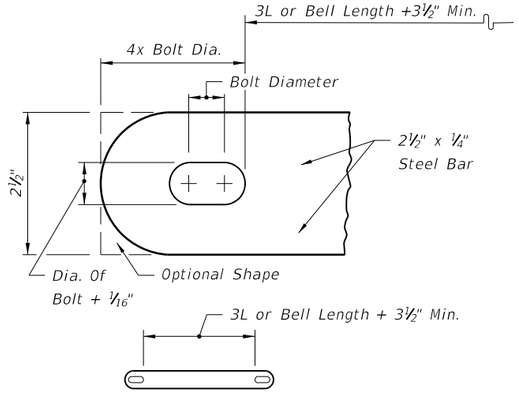

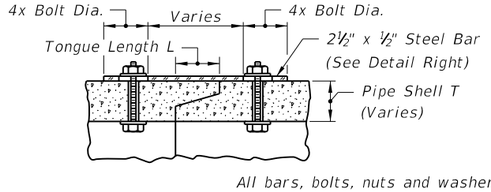

All bars, bolts, nuts and washers are to be galvanized steel.
Bolt diameters shall be ⅜" for 15" to 36" pipe and ⅝" for 42" to 72" pipe.
Two connectors required per joint, located 60° right and left of bottom center of pipe.
Bolt holes in pipe shell are to be drilled.

CONCRETE PIPE CONNECTOR

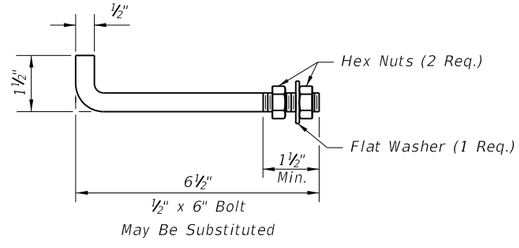

Anchors required for CMP only.

Anchor, washer and nuts to be galvanized steel.

Bend anchor where required to center in concrete slab. Damaged surfaces to be repaired after bending. Anchors are to be spaced a distance equal to four (4) corrugations. Place the anchors in the outside crest of corrugation.

Flat washers to be placed on inside wall of pipe.

Holes in the mitered end pipe are to be drilled or punched; burning not permitted.

ANCHOR DETAIL

SPECIAL DETAILS AND NOTES

C:\d\projects\standards\roadway\00200-s\00272-06.dgn rd960rh 1:54:30 PM 6/28/2012

LAST REVISION	REVISION	DESCRIPTION:		FDOT DESIGN STANDARDS 2013	CROSS DRAIN MITERED END SECTION	INDEX NO.	SHEET NO.
07/01/12						272	6

DIMENSIONS & QUANTITIES

D	X	A	B	C	E	F	G	H ■	M				N	GRATE SIZES		CONCRETE (CY)				SODDING (SY)			
									Single Pipe	Double Pipe	Triple Pipe	Quad Pipe		Standard Weight Pipe	Extra Strong Pipe	Single Pipe	Double Pipe	Triple Pipe	Quad Pipe	Single Pipe	Double Pipe	Triple Pipe	Quad Pipe
15"	2'-7"	2.27'	4.09'	6.36'	4.03'	8'	1.22'	4.0'	4.63'	7.21'	9.79'	12.37'	1.19'			0.76	1.16	1.54	1.94	8	10	11	12
18"	2'-10"	2.36'	5.12'	7.48'	5.03'	9'	1.41'	4.0'	4.92'	7.75'	10.58'	13.42'	1.21'			0.85	1.28	1.71	2.17	9	10	12	13
24"	3'-5"	2.53'	7.18' △	9.71'	7.03' △	11'	1.73'	4.0'	5.50'	8.92'	12.33'	15.75'	1.25'			1.02	1.58	2.15	2.75	10	12	13	15
30"	4'-3"	2.70'	9.25'	11.95'	9.03'	13'	2.00'	4.0'	6.08'	10.33'	14.58'	18.83'	1.29'	2½"	3"	1.23	1.98	2.74	3.50	12	14	15	17
36"	5'-1"	2.87'	11.31' ◇	14.18'	11.03' ◇	15'	2.24'	4.0'	6.67'	11.75'	16.83'	21.92'	1.33'	2½"	3"	1.40	2.38	3.33	4.24	13	15	17	20
42"	6'-0"	3.05'	13.37'	16.42'	13.03'	17'	2.45'	4.0'	7.25'	13.25'	19.25'	25.25'	1.38'	2½"	3½"	1.60	2.83	4.04	5.26	14	17	19	22
48"	6'-9"	3.22'	15.43'	18.65'	15.03'	19'	2.65'	4.0'	7.83'	14.58'	21.33'	28.08'	1.42'	2½"	3½"	1.81	3.26	4.70	6.14	15	18	21	24
54"	7'-8"	3.39'	17.49'	20.88'	17.03'	21'	2.83'	4.0'	8.42'	16.08'	23.75'	31.42'	1.46'	3"	4"	2.03	3.78	5.54	7.28	17	20	23	27
60"	8'-6"	3.56'	19.55'	23.11'	19.03'	23'	3.00'	4.0'	9.00'	17.50'	26.00'	34.50'	1.50'	3"	4"	2.28	4.36	6.43	8.50	18	22	25	29

△ 6.42' △ 6.25' Dimensions permitted to allow use of 8' standard pipe lengths.

◇ 10.40' ◇10.10' Dimensions permitted to allow use of 12' standard pipe lengths.

△ ◇ Concrete slab shall be deepened to form bridge across crown of pipe. See section below.

■ Values shown for estimating pipe quantities and are for information only.

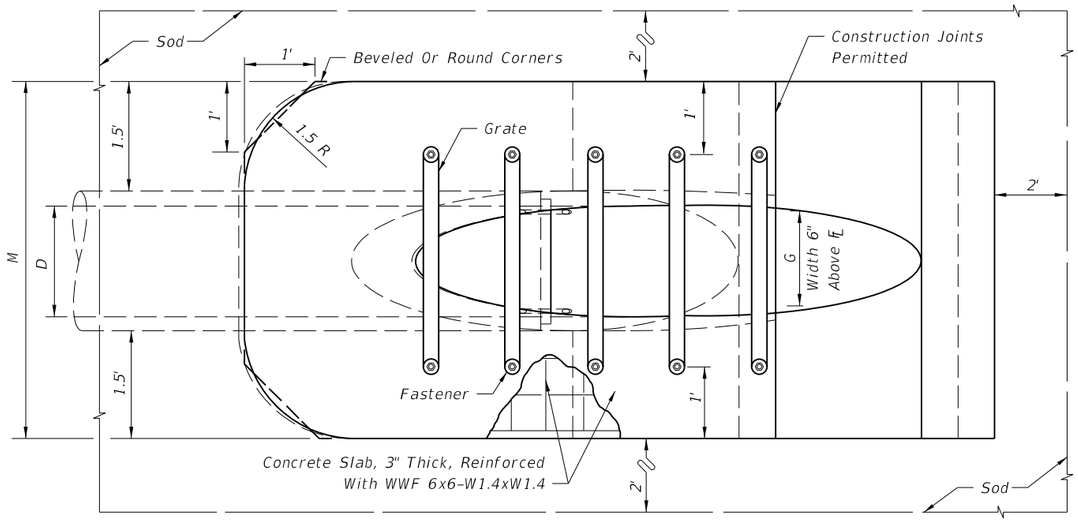

TOP VIEW-SINGLE PIPE

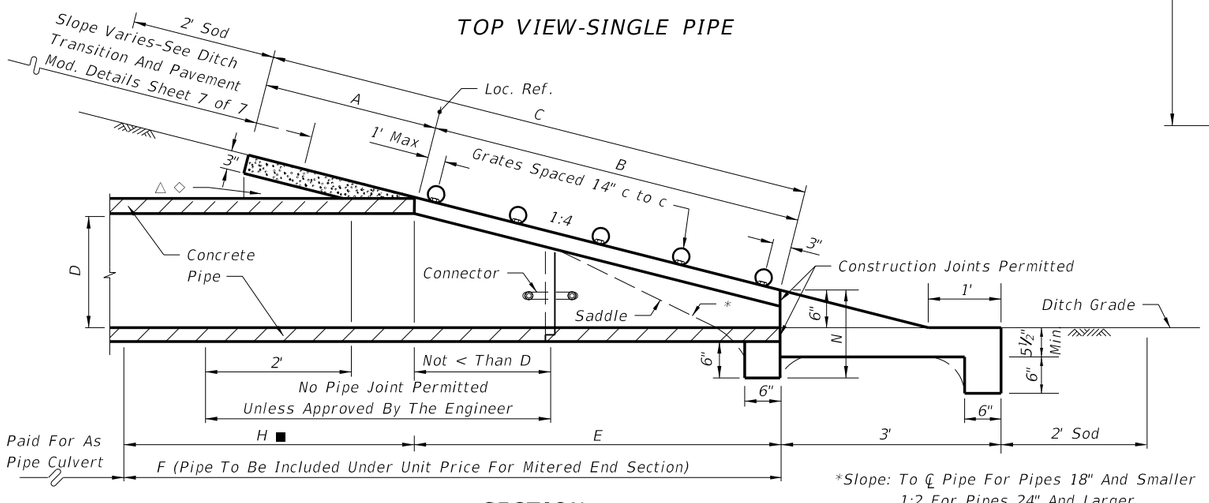

SECTION

*Slope: To ℄ Pipe For Pipes 18" And Smaller
1:2 For Pipes 24" And Larger.

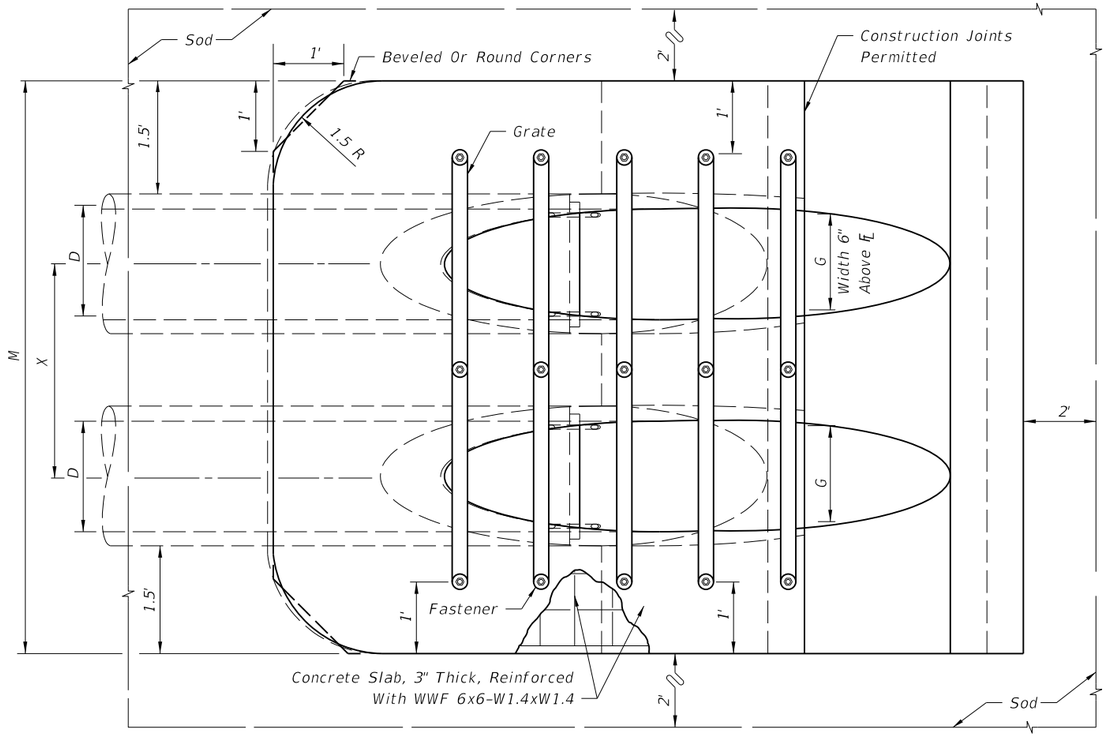

TOP VIEW-MULTIPLE PIPE

Note: See Sheets 6 and 7 for details and general notes.

SINGLE AND MULTIPLE ROUND CONCRETE PIPE

LAST REVISION	REVISION	DESCRIPTION:		FDOT DESIGN STANDARDS 2013	SIDE DRAIN MITERED END SECTION	INDEX NO.	SHEET NO.
02						273	1

C:\d\projects\standards\roadway\00200-s\00273-01.dgn rd960rh 1:54:32 PM 6/28/2012

DIMENSIONS & QUANTITIES

D	X	A	B	C	E	F	G	H ■	M				N	GRATE SIZES		CONCRETE (CY)				SODDING (SY)			
									Single Pipe	Double Pipe	Triple Pipe	Quad. Pipe		Standard Weight Pipe	Extra Strong Pipe	Single Pipe	Double Pipe	Triple Pipe	Quad. Pipe	Single Pipe	Double Pipe	Triple Pipe	Quad. Pipe
8"	2'-0"	2.5'	0.72'	3.22'	0.7'	4.0'	0.58'	3.3'	3.75'	5.75'	7.75'	9.75'	1.04'			0.52	0.90	1.22	1.54	7	8	8	9
10"	2'-2"	2.5'	1.34'	3.84'	1.3'	5.0'	0.81'	3.7'	3.92'	6.08'	8.25'	10.41'	1.04'			0.64	0.99	1.34	1.70	7	8	9	10
12"	2'-4"	2.5'	2.06'	4.56'	2.0'	6.0'	1.00'	4.0'	4.08'	6.42'	8.75'	11.08'	1.04'			0.68	1.09	1.48	1.88	7	8	10	11
15"	2'-7"	2.5'	3.09'	5.59'	3.0'	7.0'	1.23'	4.0'	4.33'	6.92'	9.50'	12.08'	1.04'			0.64	1.00	1.35	1.71	8	9	10	11
18"	2'-10"	2.5'	4.12'	6.62'	4.0'	8.0'	1.41'	4.0'	4.58'	7.42'	10.25'	13.08'	1.04'			0.69	1.09	1.49	1.89	9	10	11	12
24"	3'-5"	2.5'	6.18'	8.68'	6.0'	10.0'	1.73'	4.0'	5.08'	8.50'	11.92'	15.33'	1.04'			0.83	1.34	1.82	2.34	10	11	13	14
30"	4'-3"	2.5'	8.25'	10.75'	8.0'	12.0'	2.00'	4.0'	5.58'	9.83'	14.08'	18.33'	1.04'	2½"	3"	0.96	1.63	2.32	2.99	11	13	15	17
36"	5'-1"	2.5'	10.31'	12.81'	10.0'	14.0'	2.24'	4.0'	6.08'	11.17'	16.25'	21.33'	1.04'	2½"	3"	1.08	1.92	2.77	3.62	12	14	17	19
42"	6'-0"	2.5'	12.37'	14.87'	12.0'	16.0'	2.45'	4.0'	6.58'	12.58'	18.58'	24.58'	1.04'	2½"	3½"	1.20	2.26	3.34	4.61	13	16	18	21
48"	6'-9"	2.5'	14.43'	16.93'	14.0'	18.0'	2.65'	4.0'	7.08'	13.83'	20.58'	27.33'	1.04'	2½"	3½"	1.60	3.11	4.62	6.12	14	17	20	23
54"	7'-8"	2.5'	16.49'	18.99'	16.0'	20.0'	2.83'	4.0'	7.58'	15.25'	22.92'	30.58'	1.04'	3"	4"	1.76	3.56	5.34	7.14	15	19	22	26
60"	8'-6"	2.5'	18.55'	21.05'	18.0'	22.0'	3.00'	4.0'	8.08'	16.58'	25.08'	33.58'	1.04'	3"	4"	1.94	4.03	6.12	8.20	17	20	24	28

REMARKS

These sizes are restricted to inlet and outlet treatment for water management systems or similar applications.

■ Values shown for estimating pipe quantities and are for information only.

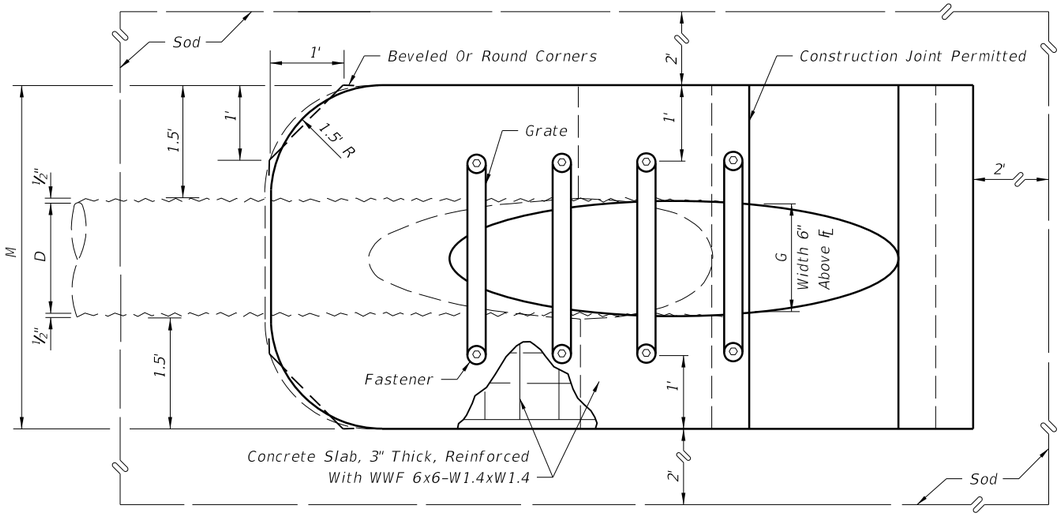

TOP VIEW-SINGLE PIPE

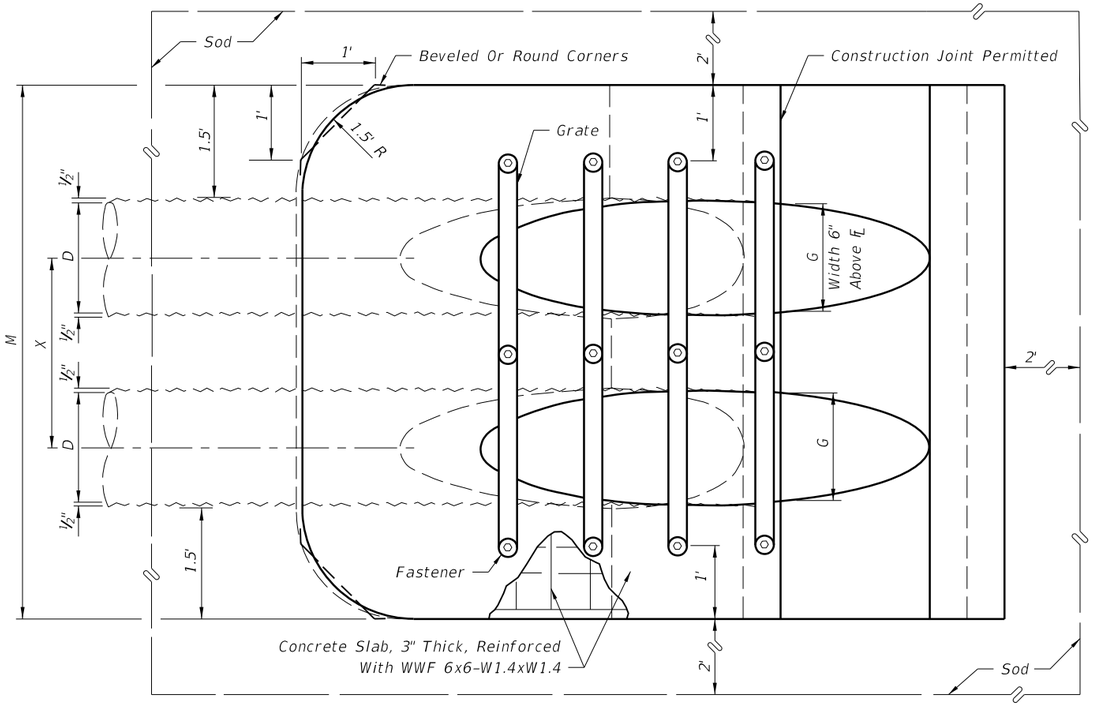

TOP VIEW-MULTIPLE PIPE

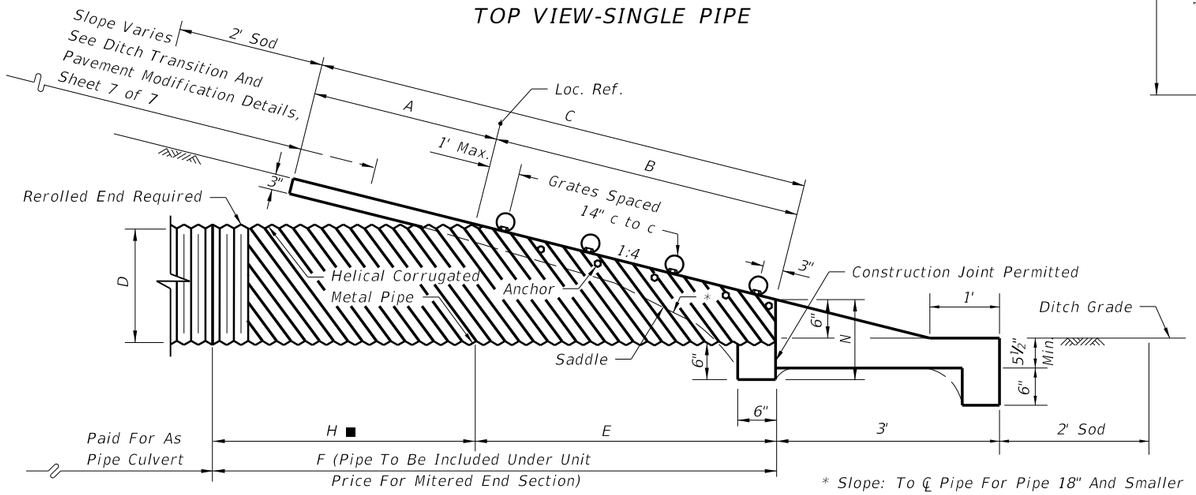

SECTION

* Slope: To ℄ Pipe For Pipe 18" And Smaller
1:2 For Pipe 24" And Larger

NOTE: See Sheets 6 and 7 for details and general notes.

SINGLE AND MULTIPLE ROUND CORRUGATED METAL PIPE

LAST REVISION	REVISION	DESCRIPTION:		FDOT DESIGN STANDARDS 2013	SIDE DRAIN MITERED END SECTION	INDEX NO.	SHEET NO.
02						273	2

C:\d\projects\standards\roadway\00200-s\00273-02.dgn rd960rh 1:54:35 PM 6/28/2012

DIMENSIONS & QUANTITIES

1974 AASHTO										M					GRATE SIZES		CONCRETE (CY)				SODDING (SY)			
Span	Rise	X	A	B	C	E	F	G	H ■	Single Pipe	Double Pipe	Triple Pipe	Quad. Pipe	N	Standard Weight Pipe	Extra Strong Pipe	Single Pipe	Double Pipe	Triple Pipe	Quad. Pipe	Single Pipe	Double Pipe	Triple Pipe	Quad. Pipe
17"	13"	2'-6"	2.5'	2.41'	4.91'	2.33'	7'	1.39'	4.7'	4.50'	7.00'	9.50'	12.00'	1.04'			0.62	0.95	1.27	1.60	8	9	10	11
21"	15"	2'-10"	2.5'	3.09'	5.59'	3.00'	8'	1.76'	5.0'	4.83'	7.67'	10.50'	13.33'	1.04'			0.69	1.06	1.44	1.77	8	9	11	12
28"	20"	3'-5"	2.5'	4.81'	7.31'	4.67'	9'	2.22'	4.3'	5.42'	8.83'	12.25'	15.67'	1.04'			0.81	1.26	1.73	2.19	9	11	12	14
35"	24"	4'-0"	2.5'	6.18'	8.68'	6.00'	11'	2.55'	5.0'	6.00'	10.00'	14.00'	18.00'	1.04'	2½"	3"	0.94	1.51	2.09	2.66	10	12	14	15
42"	29"	4'-9"	2.5'	7.90'	10.40'	7.67'	12'	2.97'	4.3'	6.58'	11.33'	16.08'	20.83'	1.04'	2½"	3½"	1.06	1.76	2.46	3.16	11	13	15	17
49"	33"	5'-6"	2.5'	9.28'	11.78'	9.00'	14'	3.34'	5.0'	7.17'	12.67'	18.17'	23.67'	1.04'	2½"	3½"	1.19	2.02	2.84	3.68	12	14	17	19
57"	38"	6'-4"	2.5'	11.00'	13.50'	10.67'	16'	3.65'	5.3'	7.83'	14.17'	20.50'	26.83'	1.04'	3"	4"	1.35	2.35	3.35	4.36	13	16	19	22
64"	43"	7'-1"	2.5'	12.71'	15.21'	12.33'	17'	3.89'	4.7'	8.42'	15.50'	22.58'	29.67'	1.04'	3"	4"	1.50	2.70	3.86	5.03	14	17	20	24
71"	47"	7'-10"	2.5'	14.09'	16.59'	13.67'	19'	4.14'	5.3'	9.00'	16.83'	24.67'	32.50'	1.04'	3"	4"	1.62	2.94	4.27	5.59	15	18	22	25

■ Values shown for estimating pipe quantities and are for information only.

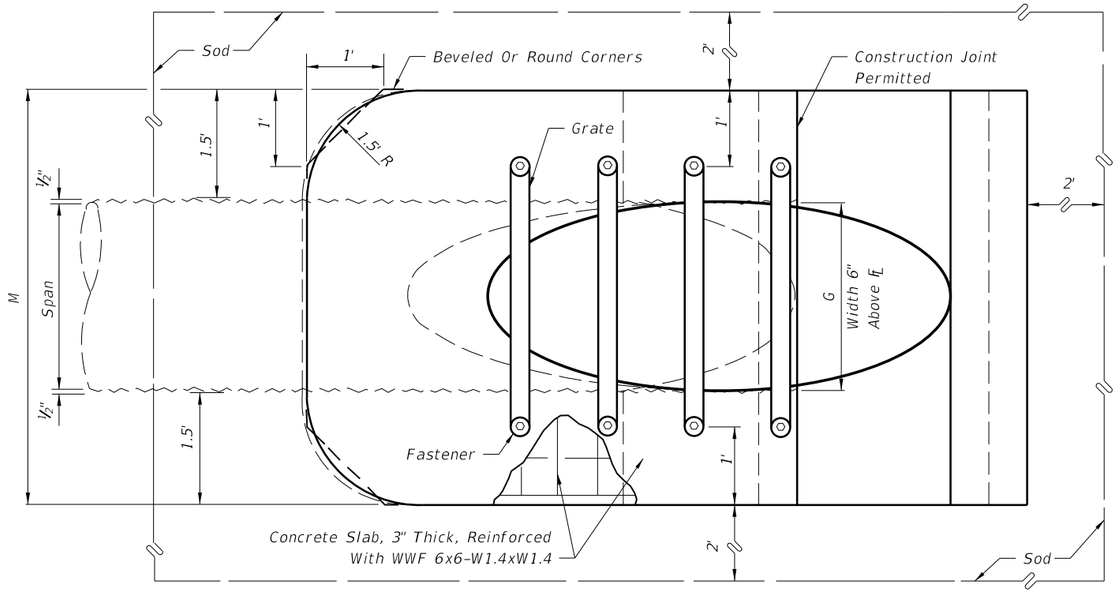

TOP VIEW-SINGLE PIPE

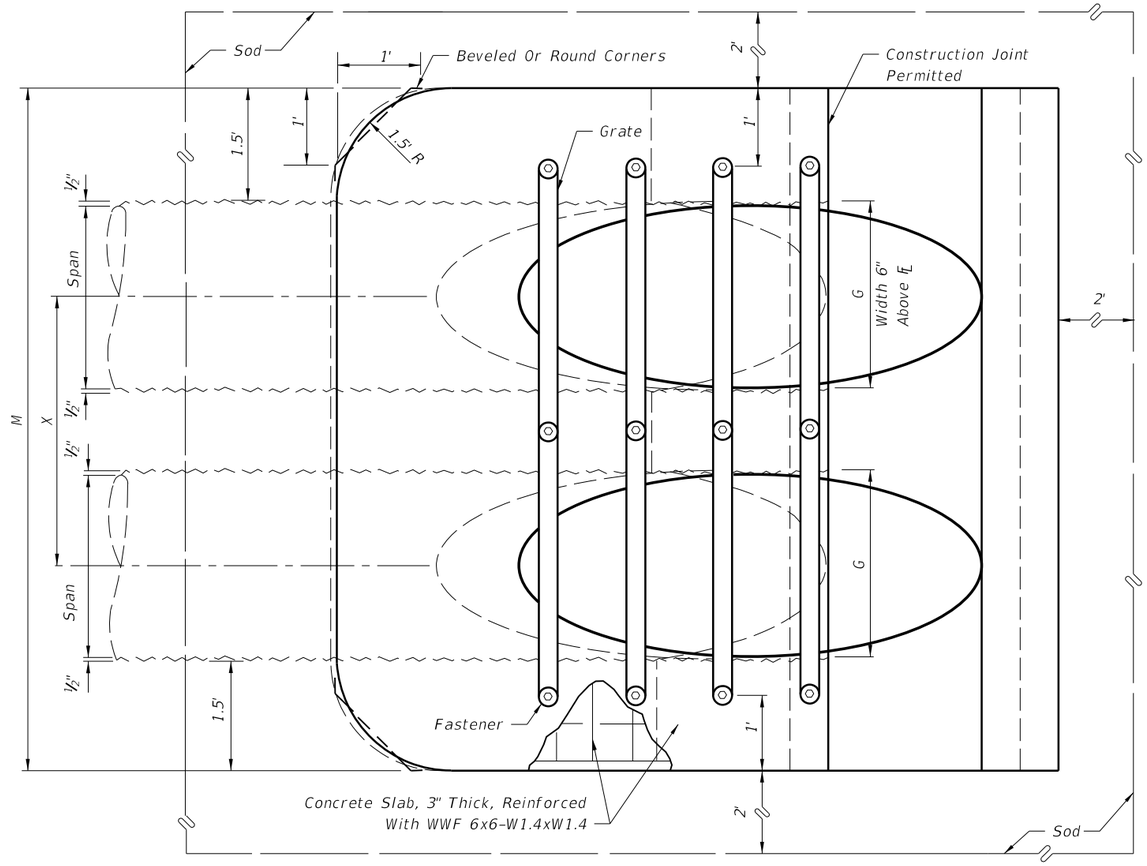

TOP VIEW-MULTIPLE PIPE

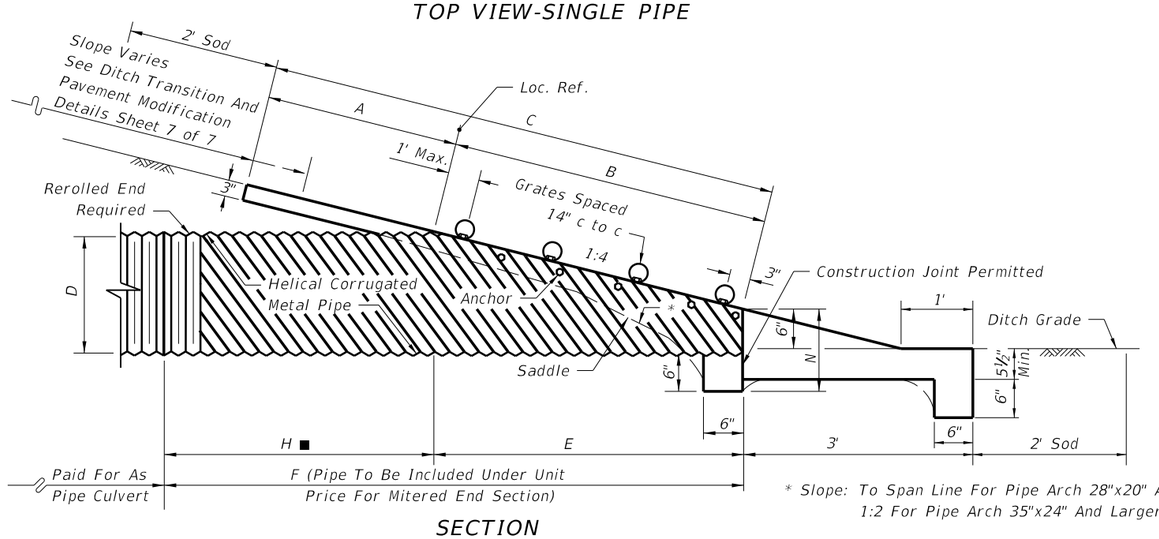

SECTION

* Slope: To Span Line For Pipe Arch 28"x20" And Smaller
1:2 For Pipe Arch 35"x24" And Larger

NOTE: See Sheets 6 and 7 for details and general notes.

SINGLE AND MULTIPLE CORRUGATED METAL PIPE-ARCH

LAST REVISION	REVISION	DESCRIPTION:		FDOT DESIGN STANDARDS 2013	SIDE DRAIN MITERED END SECTION	INDEX NO.	SHEET NO.
02						273	3

C:\d\projects\standards\roadway\00200-s\00273-03.dgn rd960rh 1:54:37 PM 6/28/2012

DIMENSIONS & QUANTITIES

Rise R	Span S	X	A	B	C	E	F	G	H ■	M				N	GRATE SIZES		CONCRETE (CY)				SODDING (SY)			
										Single Pipe	Double Pipe	Triple Pipe	Quad. Pipe		Standard Weight Pipe	Extra Strong Pipe	Single Pipe	Double Pipe	Triple Pipe	Quad. Pipe	Single Pipe	Double Pipe	Triple Pipe	Quad. Pipe
12"	18"	2'-10"	2.36'	3.06'	5.42'	3.03'	5'	1.50'	2.0'	4.92'	7.75'	10.58'	13.42'	1.21'			0.68	1.04	1.41	1.77	8	9	11	12
14"	23"	3'-4"	2.44'	3.75'	6.19'	3.70'	6'	1.90'	2.3'	5.38'	8.71'	12.04'	15.38'	1.23'			0.76	1.19	1.63	2.05	9	10	12	13
19"	30"	4'-0"	2.62'	5.47'	8.09'	5.36'	8'	2.37'	2.6'	6.04'	10.04'	14.04'	18.04'	1.27'	2½"	3"	0.95	1.52	2.09	2.65	10	12	13	15
24"	38"	5'-0"	2.79'	7.18'	9.97'	7.03'	10'	2.85'	3.0'	6.79'	11.79'	16.79'	21.79'	1.31'	2½"	3"	1.18	1.95	2.74	3.53	11	13	15	18
29"	45"	5'-11"	3.05'	8.90'	11.95'	8.70'	12'	3.19'	3.3'	7.50'	13.42'	19.33'	25.25'	1.38'	2½"	3½"	1.41	2.42	3.44	4.45	12	15	18	20
34"	53"	7'-0"	3.22'	10.62'	13.84'	10.36'	13'	3.57'	2.6'	8.25'	15.25'	22.25'	29.25'	1.42'	3"	3½"	1.63	2.92	4.22	5.52	13	17	20	23
38"	60"	7'-10"	3.39'	11.99'	15.38'	11.70'	15'	3.95'	3.3'	8.92'	16.75'	24.58'	32.42'	1.46'	3"	4"	1.83	3.36	4.89	6.41	14	18	21	25
43"	68"	8'-11"	3.56'	13.71'	17.27'	13.36'	17'	4.28'	3.6'	9.67'	18.58'	27.50'	36.42'	1.50'	3"	4"	2.09	3.95	5.80	7.65	16	20	23	27
48"	76"	9'-11"	3.73'	15.43'	19.16'	15.03'	19'	4.59'	4.0'	10.42'	20.33'	30.25'	40.17'	1.54'	Special	Special	2.37	4.54	6.73	8.92	17	21	26	30
53"	83"	10'-8"	3.91'	17.15'	21.06'	16.70'	20'	4.77'	3.3'	11.08'	21.75'	32.42'	43.08'	1.58'	Special	Special	2.61	5.09	7.56	10.03	18	23	27	32
58"	91"	11'-8"	4.08'	18.87'	22.95'	18.36'	22'	5.01'	3.6'	11.83'	23.50'	35.17'	46.83'	1.63'	Special	Special	2.91	5.77	8.64	11.50	19	24	29	35

■ Values shown for estimating pipe quantities and are for information only.

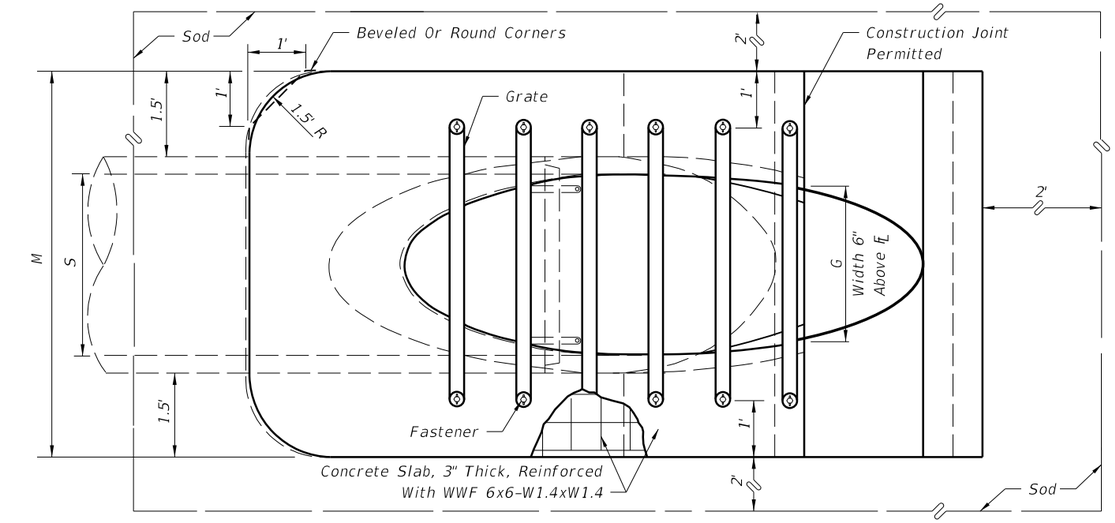

TOP VIEW-SINGLE PIPE

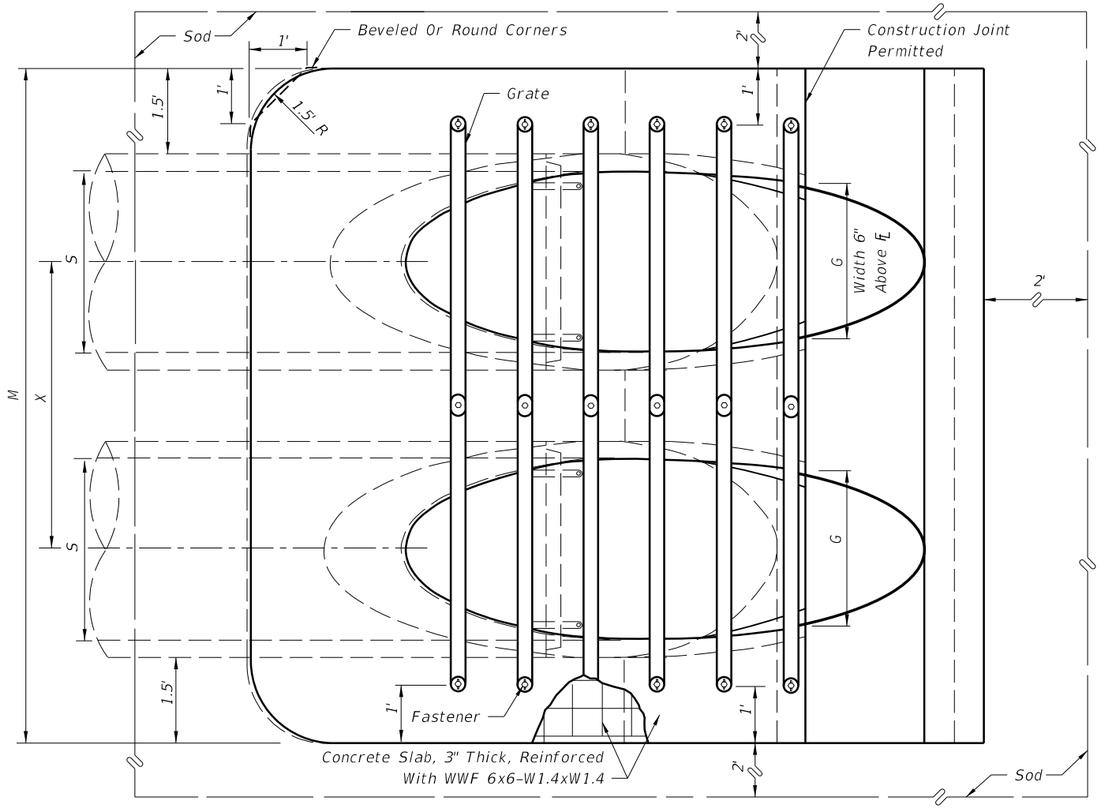

TOP VIEW-MULTIPLE PIPE

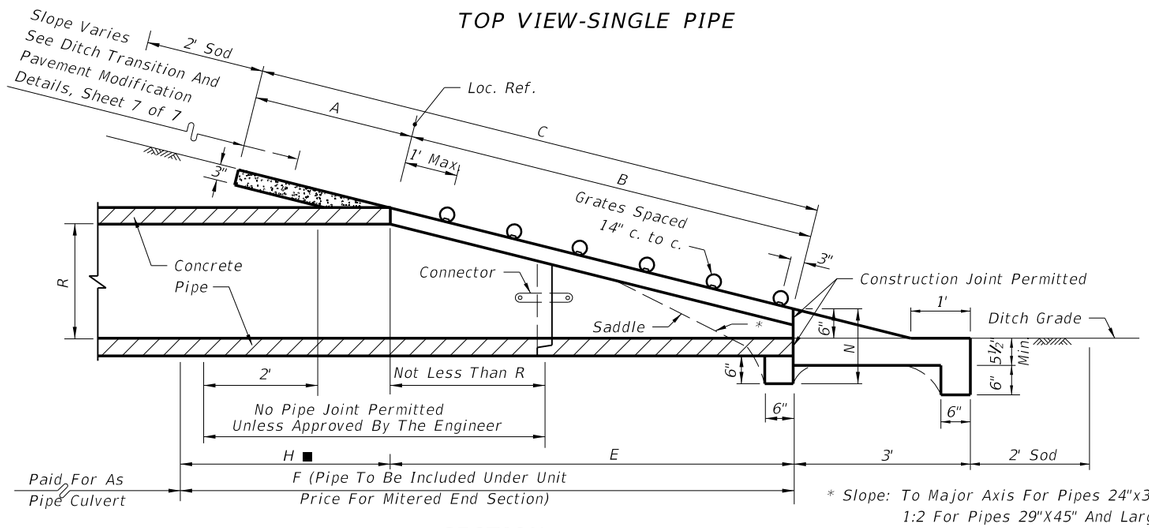

SECTION

* Slope: To Major Axis For Pipes 24"x38" And Smaller. 1:2 For Pipes 29"X45" And Larger.

NOTE: See Sheets 6 and 7 for details and general notes.

SINGLE AND MULTIPLE ELLIPTICAL CONCRETE PIPE

LAST REVISION	REVISION	DESCRIPTION:				
02			FDOT DESIGN STANDARDS 2013	SIDE DRAIN MITERED END SECTION	INDEX NO. 273	SHEET NO. 4

C:\d\projects\standards\roadway\00200-s\00273-04.dgn
rd960rh
1:54:39 PM
6/28/2012

Drain Size	s	n	L	La
CONCRETE PIPE (ROUND)				
15"	3	4	4'-0"	4'-11"
18"	4	5	5'-2"	6'-1"
24"	6	7	7'-6"	8'-5"
30"	7	8	8'-8"	9'-7"
36"	9	10	11'-0"	11'-11"
42"	11	12	13'-4"	14'-3"
48"	13	14	15'-8"	16'-7"
54"	14	15	16'-10"	17'-9"
60"	16	17	19'-2"	20'-1"
CORRUGATED METAL PIPE (ROUND)				
15"	2	3	2'-10"	3'-9"
18"	3	4	4'-0"	4'-11"
24"	5	6	6'-4"	7'-3"
30"	7	8	8'-8"	9'-7"
36"	8	9	9'-10"	10'-9"
42"	10	11	12'-2"	13'-1"
48"	12	13	14'-6"	15'-5"
54"	14	15	16'-10"	17'-9"
60"	15	16	18'-0"	18'-11"

**

Drain Size	s	n	L	La
ELLIPTICAL CONCRETE PIPE				
12"x18"	2	3	2'-10"	3'-9"
14"x23"	3	4	4'-0'	4'-11"
19"x30"	4	5	5'-2"	6'-1"
24"x38"	5	6	6'-4"	7'-3"
29"x45"	7	8	8'-8"	9'-7"
34"x53"	8	9	9'-10"	0'-9"
38"x60"	10	11	12'-2"	13'-1"
43"x68"	11	12	13'-4"	14'-3"
48"x76"	13	14	15'-8"	16'-7"
53"x83"	14	15	16'-10"	17'-9"
58"x91"	15	16	18'-0"	18'-11"
CORRUGATED METAL PIPE (ARCH) ***				
17"x13"	1	2	1'-8"	2'-7"
21"x15"	2	3	2'-10"	3'-9"
28"x20"	4	5	5'-2"	6'-1"
35"x24"	5	6	6'-4"	7'-3"
42"x29"	6	7	7'-6"	8'-5"
49"x33"	7	8	8'-8"	9'-7"
57"x38"	9	10	11'-0"	11'-11"
64"x43"	10	11	12'-2"	13'-1"
71"x47"	12	13	14'-6"	15'-5"

**

Note: $\frac{5}{8}$" x 3" bolts are standard for all grate fasteners, except when the contractor elects to use the slotted upper holes for the intermediate fasteners on multiple drain pipes, which will require the following bolt lengths:

Grate Size (Std. & X-Stg.)	Bolt Length
$2\frac{1}{2}$"	$5\frac{1}{2}$"
3"	6"
$3\frac{1}{2}$"	$6\frac{1}{2}$"
4"	7"

** To be used only when grates are called for in the plans.

*** 1974 AASHTO Pipe Arch Sizes.

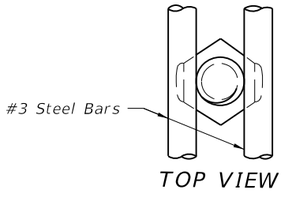

TOP VIEW

$\frac{5}{8}$" Galvanized Bolt Hex Head Bolt Shown; Either Hex Head Or Square Head Bolt May Be Used. Only Hex Nut To Be Used.

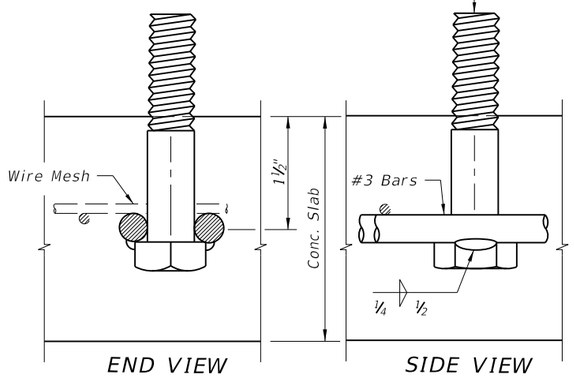

END VIEW SIDE VIEW

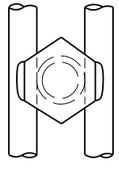

BOTTOM VIEW

The specified weld shall be made when the fabricated unit is subject to hazardous hauls and repeated handling. Tack welds are permitted for local or job site fabrication. Galvanizing over welded surface not required.

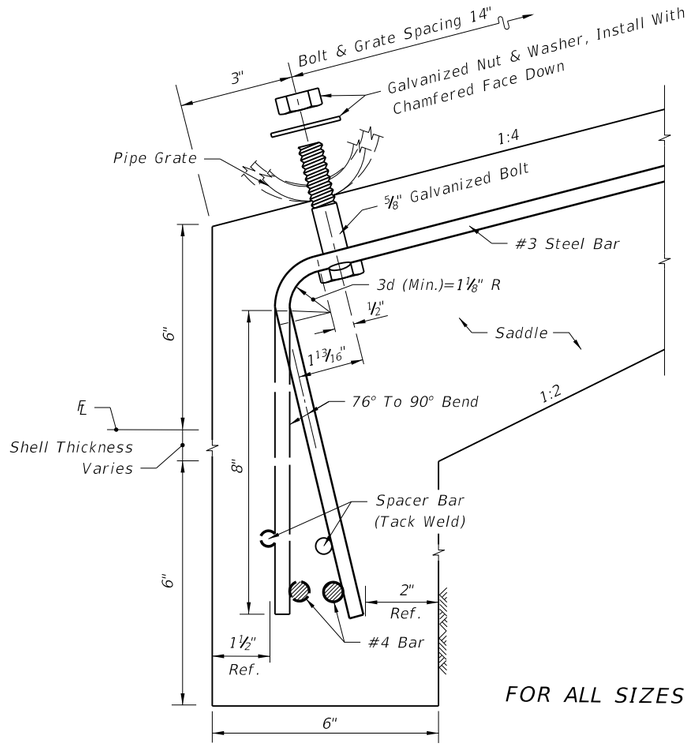

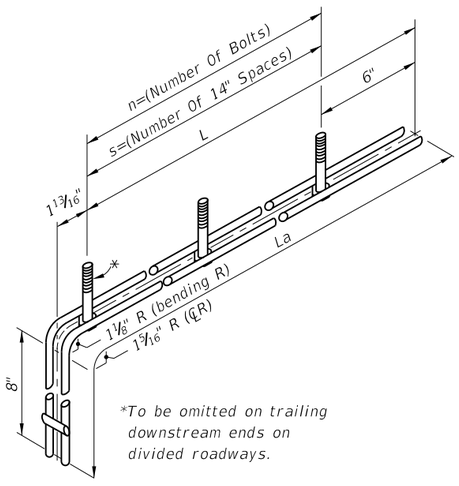

*To be omitted on trailing downstream ends on divided roadways.

FOR ALL SIZES OF SINGLE AND MULTIPLE DRAIN PIPE FASTENER UNIT

DETAILS FOR CONCRETE & CORRUGATED METAL PIPE

C:\d\projects\standards\roadway\00200-s\00273-05.dgn rd960rh 1:54:41 PM 6/28/2012

LAST REVISION	REVISION	DESCRIPTION:				
00			FDOT DESIGN STANDARDS 2013	SIDE DRAIN MITERED END SECTION	INDEX NO. 273	SHEET NO. 5

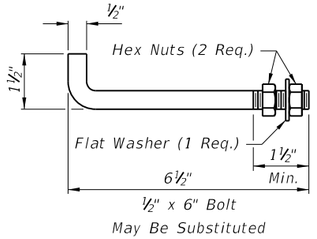

Notes:
Anchors required for CMP only.
Anchor, washer and nuts to be galvanized steel.
Bend anchor where required to center in concrete slab.
Damaged surfaces to be repaired after bending.
Anchors are to be spaced a distance equal to four (4) corrugations.
Place the anchors in the outside crest of corrugation.
Flat washer to be placed on inside wall of pipe.
Holes in the mitered end pipe are to be drilled or punched; burning not permitted.

ANCHOR DETAIL

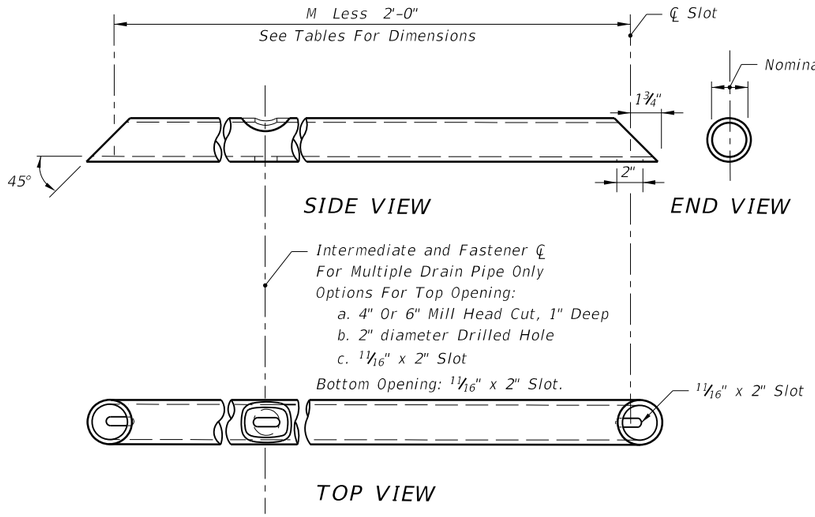

FOR SINGLE & MULTIPLE DRAIN PIPE

GRATE DETAIL

See General Notes, Sheet 7.

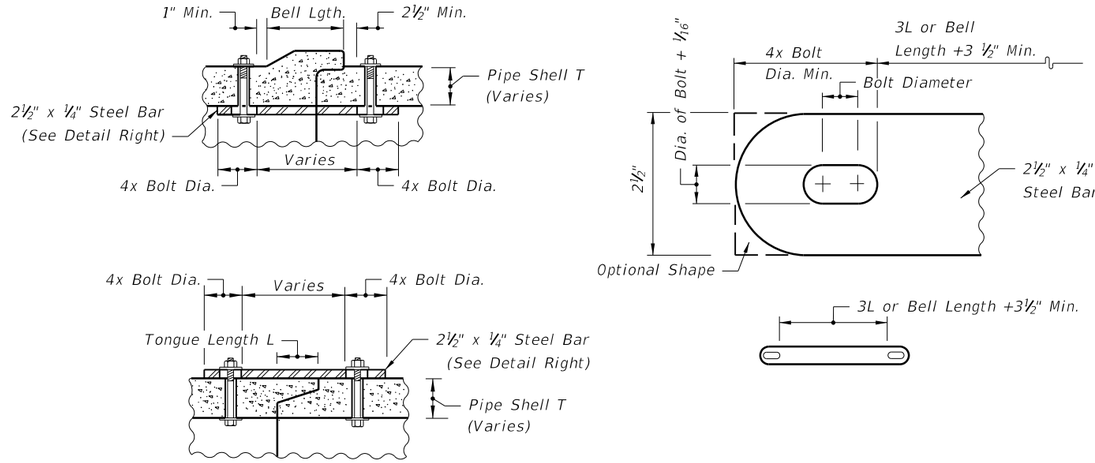

All bars, bolts, nuts and washers are to be galvanized steel.
Bolt diameters shall be ⅜" for 15" to 36" pipe and ⅝" for 42" to 60" pipe.
Two connectors required per joint, located 60° right and left of bottom center of pipe.
Bolt holes in pipe shell are to be drilled.

CONCRETE PIPE CONNECTOR DETAIL

DETAILS FOR CONCRETE & CORRUGATED METAL PIPE

C:\d\projects\standards\roadway\00200-s\00273-06.dgn rd960rh 1:54:43 PM 6/28/2012

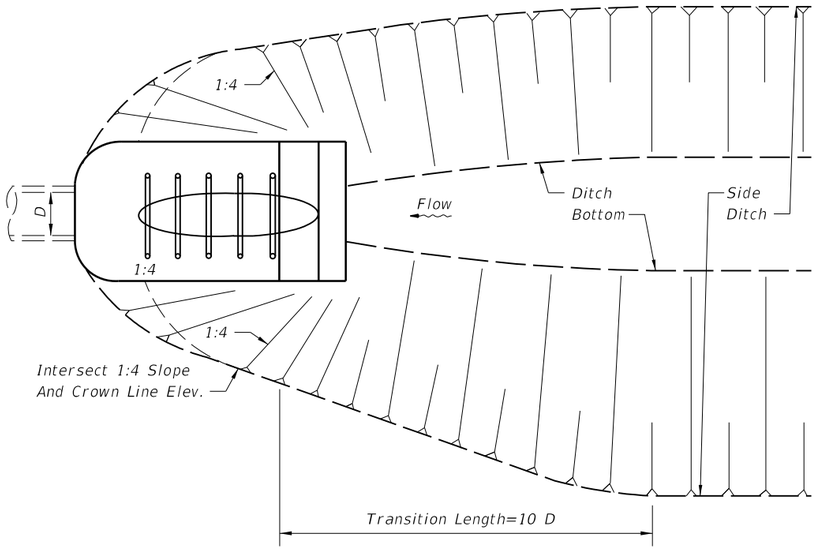

PLAN

DITCH TRANSITION

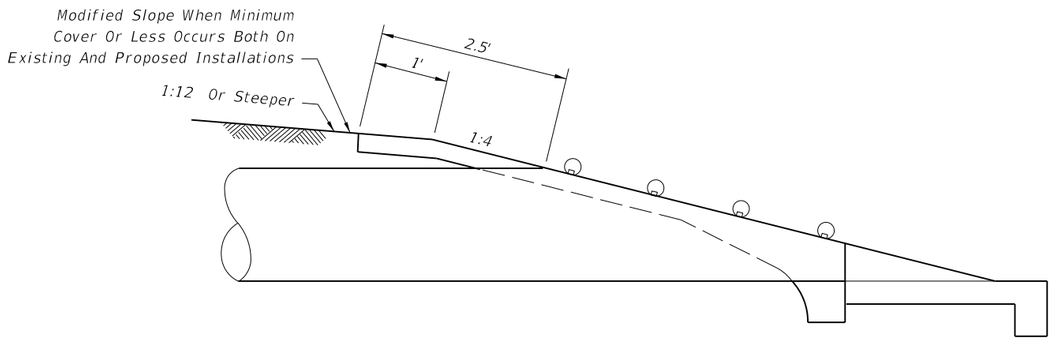

PERMISSIBLE PAVEMENT MODIFICATION

GENERAL NOTES

1. Unless otherwise designated in the plans, concrete pipe mitered end sections may be used with any type of side drain pipe; corrugated steel pipe mitered end sections may be used with any type of side drain pipe except aluminum pipe; and, corrugated aluminum mitered end sections may be used with any type of side drain pipe except steel pipe. When bituminous coated metal pipe is specified for side drain pipe, mitered end sections shall be constructed with like pipe or concrete pipe. When the mitered end section pipe is dissimilar to the side drain pipe, a concrete jacket shall be constructed in accordance with Index No. 280.

2. Corrugated polyethylene pipe (HDPE), polyvinyl-chloride pipe (PVC) and polypropylene pipe (PPP) for side drain applications shall utilize either corrugated metal or concrete mitered end sections (MES). When used in conjunction with corrugated (MES), connection shall be by either a formed metal band specifically designated to join HDPE or PVC pipe, with metal pipe or other coupler approved by the State Drainage Engineer. When used in conjunction with a concrete (MES), connection shall be by concrete jacket constructed in accordance with Index No. 280.

3. Concrete pipe used in the assembly of mitered end sections shall be of selective lengths to avoid excessive connections.

4. Corrugated metal pipe galvanizing that is damaged during beveling and perforating for mitered end section shall be repaired.

5. That portion of corrugated metal pipe in direct contact with the concrete slab and extending 12" beyond shall be bituminous coated prior to placing of the concrete.

6. When existing multiple side drain pipes are spaced other than the dimensions shown in this detail, or have nonparallel axes, or have non-uniform sections, The mitered end sections will be constructed either separately as single pipe mitered end sections or collectively as multiple pipe end sections as directed by the Engineer; however, mitered end sections will be paid for each, based on each independent pipe end.

7. In addition to the requirements of Section 430-4, side drain culverts shall comply with the cover requirements shown on Index No. 205.

8. The reinforced concrete slab shall be constructed for all sizes of side drain pipe and cast in place with Class NS concrete.

9. Round pipe size 30" or greater, pipe-arch size 35"x24" or greater and elliptical pipe 19"x30" or greater shall be grated unless excepted in the plans. Smaller sizes of pipe shall be grated only when called for in plans. The lower grate on trailing downstream ends on divided highways shall be omitted.

10. Grates are to be fabricated from steel ASTM A53, Grade B, pipe. The lower grate on all traffic approach ends shall be Schedule 80 and all remaining grates shall be Schedule 40. Grates subject to salt free and corrosive free environment may be fabricated from galvanized pipe, with base metal exposed during fabrication repaired as specified in Section 562, Standard Specifications; or, fabricated from black pipe and hot dip galvanized after fabrication in accordance with ASTM A123. Grates subject to salt water or highly corrosive environment shall be hot dip galvanized after fabrication in accordance with ASTM A123.

11. Ditch transitions shall be used on all grades in excess of 3% as directed by the Engineer.

12. The project engineer shall contact the District Drainage Engineer for possible alternate treatment prior to constructing side drain mitered end sections where a minimum spacing of 30' will not result between the toe points of the mitered end sections.

13. The cost of all pipe(s), grates, fasteners, reinforcing, connectors, anchors, concrete, sealants, jackets and coupling bands shall be included in the cost for the mitered end section. Sodding shall be paid for separately under the contract unit price for Performance Turf, SY.

14. Mitered end sections shall be paid for under the contract unit price for Mitered End Section (SD), Ea., based on each independent pipe end.

DESIGN NOTES

1. In critical hydraulic locations, grates shall not be used until potential debris transport has been evaluated by the drainage engineer and appropriate adjustments made. Ditch grades in excess of 3% or pipe with less than 1.5' of cover and grades in excess of 1% will require such an evaluation (General Note 9).

2. The design engineer shall determine highly corrosive locations and specify in the plans when the grates shall be hot-dip galvanized after fabrication (General Note 10).

3. The design engineer shall determine and designate in the plans which alternate types of mitered end section will not be permitted. The restriction shall be based on corrosive or structural requirements.

NOTES & INFORMATION

C:\d\projects\standards\roadway\00200-s\00273-07.dgn
6/28/2012 1:54:45 PM rd960rh

LAST REVISION	REVISION	DESCRIPTION:		FDOT DESIGN STANDARDS 2013	SIDE DRAIN MITERED END SECTION	INDEX NO.	SHEET NO.
07/01/12			STATE OF FLORIDA DEPARTMENT OF TRANSPORTATION			273	7

SCHEDULE OF BELL REINFORCEMENT
Classes II,III,IV,V; Wall A,B,C

Nominal Pipe Diameter	Design Bell Reinforcement	Maximum Reinforcement Under Tolerance
	in^2 per foot	in^2 per foot
15"	0.07	0.010
18"	0.07	0.010
24"	0.09	0.010
30"	0.12	0.010
36"	0.14	0.010
42"	0.16	0.010
48"	0.19	0.011
54"	0.21	0.012
60"	0.23	0.0135
66"	0.26	0.015
72"	0.28	0.0165
78"	0.30	0.018
84"	0.33	0.0195
90"	0.35	0.021
96"	0.37	0.0225
102"	0.40	0.024
108"	0.42	0.0255

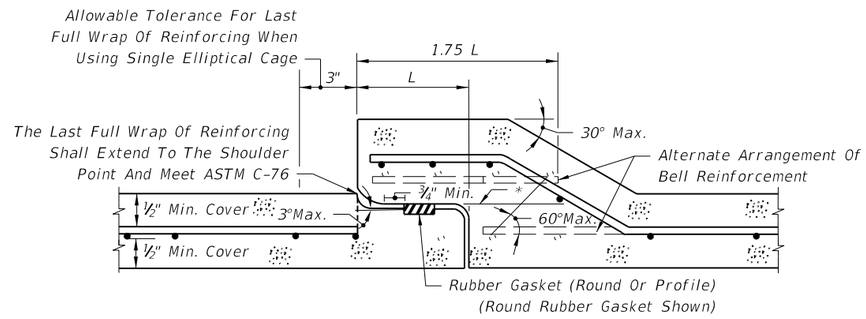

*All circumferential steel located above this line within 1.75 L is defined as bell reinforcement.

ROUND RUBBER GASKET SHOWN

DETAIL OF BELL & SPIGOT CONCRETE PIPE JOINT USING ROUND OR PROFILE RUBBER GASKET

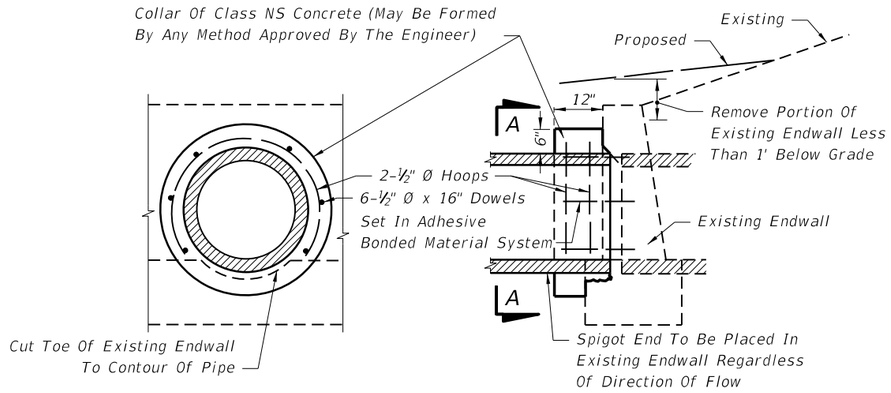

SECTION AA LONGITUDINAL SECTION

Note: Cost for removal and disposal of portions of top and toe of existing endwall and cost of concrete, reinforcing steel and construction of collar to be included in the contract unit price for pipe culvert.

CONCRETE COLLAR FOR EXTENSION OF EXISTING PIPE CULVERTS

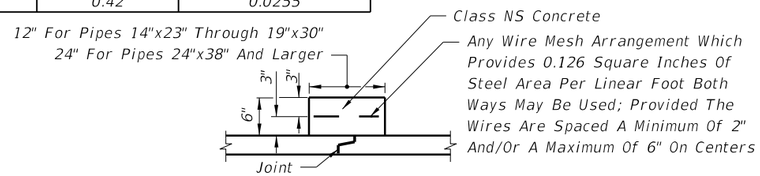

CONCRETE JACKET

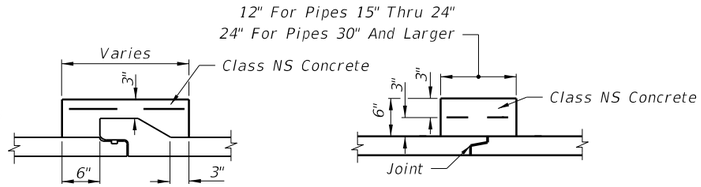

Note: For reinforcement see elliptical pipe concrete jacket. (All Pipe Sizes)

BELL AND SPIGOT TONGUE & GROOVE

DISSIMILAR JOINTS

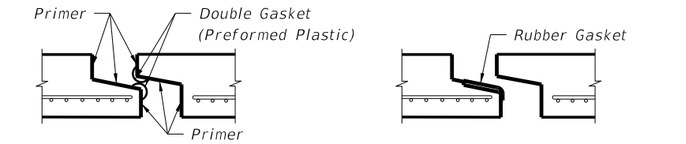

Filter Fabric Jacket Required
PREFORMED PLASTIC JOINT (BEFORE PULL-UP)

Filter Fabric Jacket Required
PROFILE RUBBER GASKET (BEFORE PULL-UP)

Cost of concrete jacket or filter fabric jacket to be included in cost of elliptical concrete pipe culverts.

ELLIPTICAL CONCRETE PIPE JOINTS

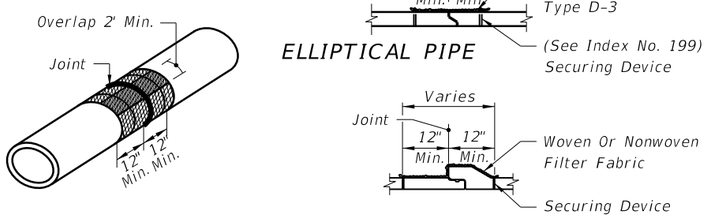

ELLIPTICAL PIPE SHOWN ISOMETRIC VIEW

ELLIPTICAL PIPE

ROUND PIPE PIPE SECTIONS

Cost of filter fabric jacket to be included in cost of pipe culverts.

FOR ALL PIPE TYPES - CONCRETE PIPE SHOWN

FILTER FABRIC JACKET

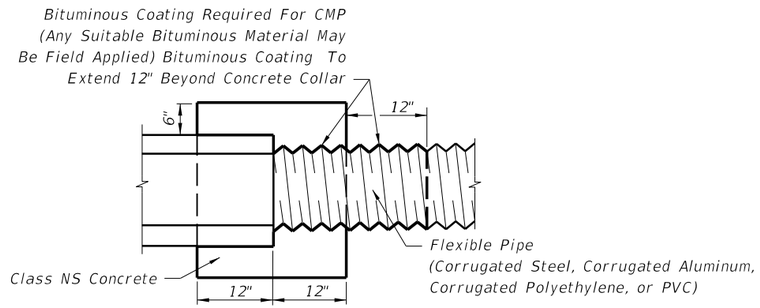

Note: Cost of concrete and bituminous coating to be included in contract unit price for either new pipe or Mitered End Section.

Alternate connection must be approved by the State Drainage Engineer.

A concrete jacket shall not be used to join:
a) metal pipe of dissimilar materials
b) flexible pipe when the minimum cover required in accordance with Index No. 205 cannot be obtained

DISSIMILAR TYPES

CONCRETE JACKET FOR CONNECTING DISSIMILAR TYPES OF PIPE AND CONCRETE PIPES WITH DISSIMILAR JOINTS

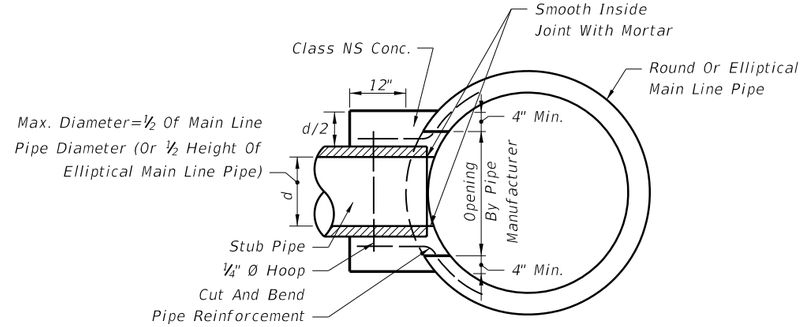

Cost of concrete and steel to be included in contract unit price for pipe culvert.

CONCRETE COLLAR FOR JOINING MAINLINE PIPE AND STUB PIPE

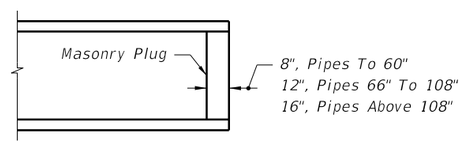

Note: Unless otherwise called for in the plans, the cost of plugging pipes to be included in contract unit price for new pipe.

PIPE PLUG

LAST REVISION	REVISION	DESCRIPTION:				
01/01/11			FDOT DESIGN STANDARDS 2013	MISCELLANEOUS DRAINAGE DETAILS	INDEX NO. 280	SHEET NO. 1

C:\d\projects\standards\roadway\00200-s\00280-01.dgn rd960rh 1:54:47 PM 6/28/2012

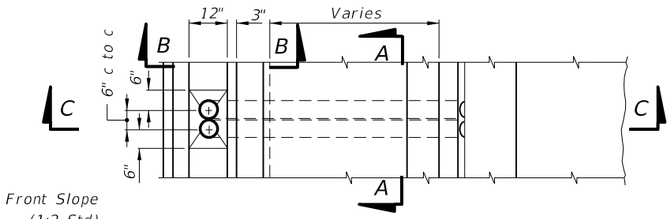

PLAN

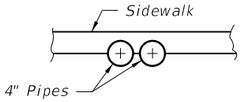

SECTION AA

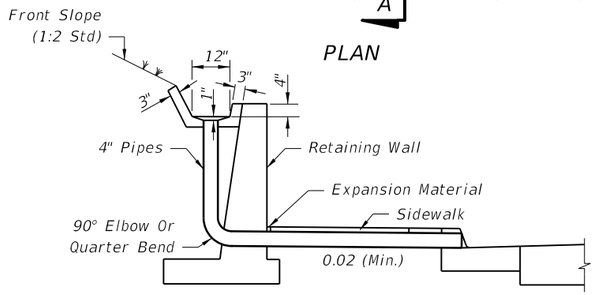

SECTION CC

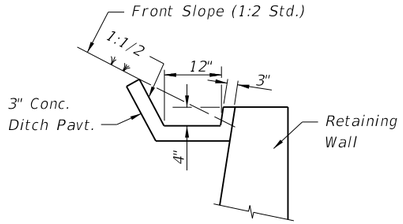

SECTION BB

Note: PVC pipe, Schedule 40, to be paid for under the contract unit price for Polyvinyl Chloride Pipe Culvert (4"), LF.

CONCRETE GUTTER AND DRAINS AT RETAINING WALLS

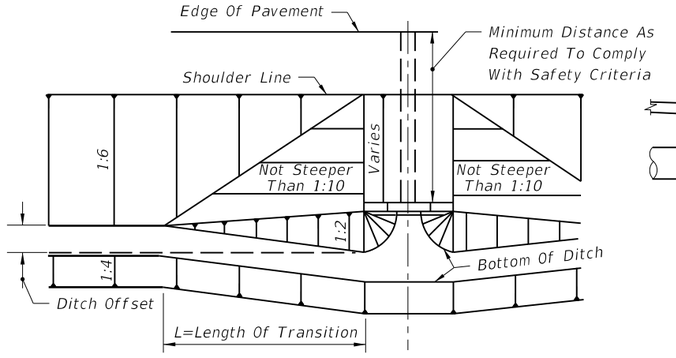

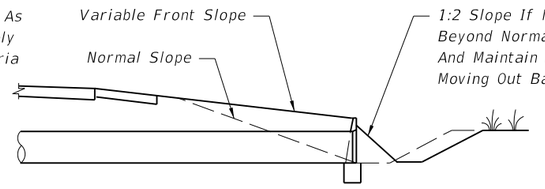

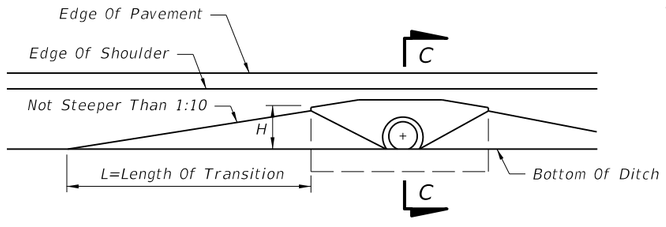

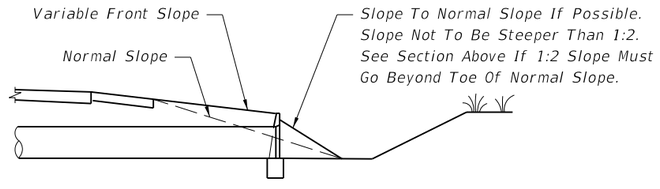

NOTE: Filling or excavation of variable slopes to be done during normal grading operations.

SECTION CC

Use Larger Value Of Either:
1. L=10xH (No Maximum)
2. L=10xDitch Offset (Maximum L=100')

METHOD FOR SETTING LIMITS OF VARIABLE FRONT SLOPES AT DRAINAGE STRUCTURES

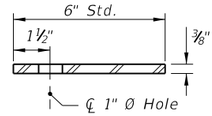

SECTION - STEEL PLATE

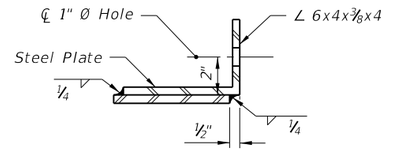

CLIP DETAIL

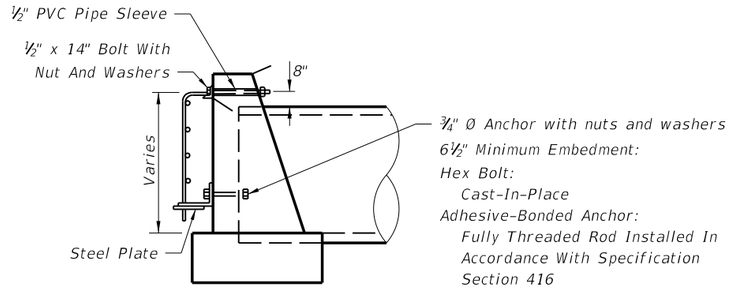

SIDE VIEW

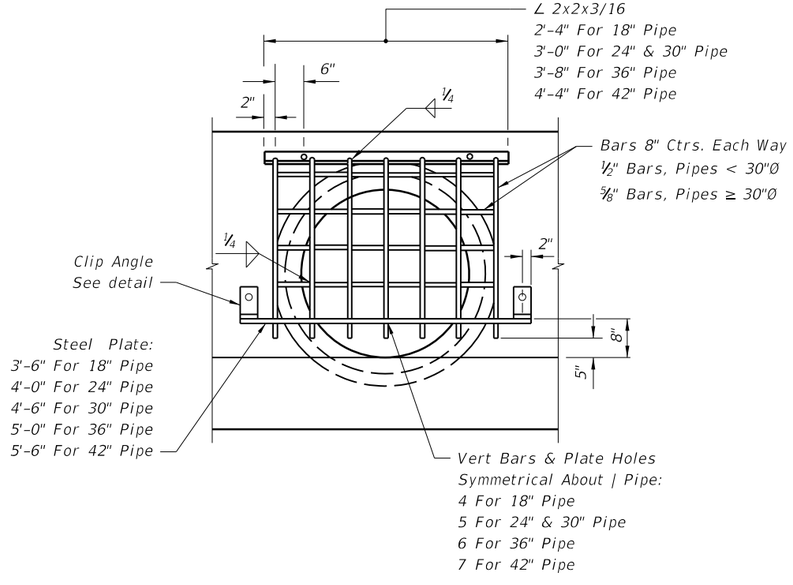

Pipe Dia.	18"	24"	30"	36"	42"
Grate (Lbs.)	48	58	74	90	111

FRONT VIEW

Note: Guards to be constructed only at locations specifically called for in plans. Guard, plate & clips, bolts, nuts and sleeves to be included in the contract unit price for Reinforcing Steel (Miscellaneous).

GUARD AT PIPE ENDS

C:\d*projects\standards\roadway\00200-s\00280-02.dgn
rd960rh
1:54:49 PM
6/28/2012

LAST REVISION	REVISION	DESCRIPTION:				
07/01/07			FDOT DESIGN STANDARDS 2013	MISCELLANEOUS DRAINAGE DETAILS	INDEX NO. 280	SHEET NO. 2

RAILROAD COMPANY	CLEARANCE BELOW BOTTOM OF RAIL (FEET)(2)	STRENGTH ASTM (C76) CLASS
Alabama & Gulf Coast Railway (Rail America)	5.5	IV
AN Railway & Bay Line Railroad (Genesee & Wyoming)	5.5 / 4.5(1)	V
CSX Transportation	5.5	V
First Coast Railroad (Genesee & Wyoming)	5.5 / 4.5(1)	V
Florida Midland, Central, and Northern Railroads (Pinsly Railroad)	5.5	V
Florida East Coast (FEC) Railway Company	5.5	IV
Florida West Coast Railroad Company	5.5	V
Georgia & Florida Railway, Inc.	5.5	V
Norfolk Southern (NS) Railway Corporation	5.5 / 4.5(1)	V
Port of Palm Beach District Railroad	5.5	IV
Seminole Gulf Railway (LP)	6.0	V
South Central Florida Express	6.0	V
Talleyrand Terminal Railroad (Genesee & Wyoming)	5.5 / 4.5 (1)	V
South Florida Regional Transportation Authority (Tri-County Commuter Rail)	5.5	V

(1) – Distance standard for yard and industrial tracks.

(2) – Clearance is for casing pipe. All subgrade carrier pipelines and wirelines will be installed within a casing pipe which will extend from Right-of-Way line to Right-of-Way line.

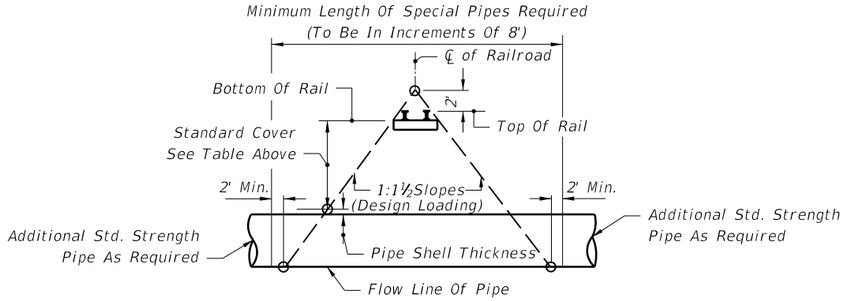

METHOD FOR DETERMINING THE LENGTH OF SPECIAL PIPE REQUIRED UNDER RAILROADS

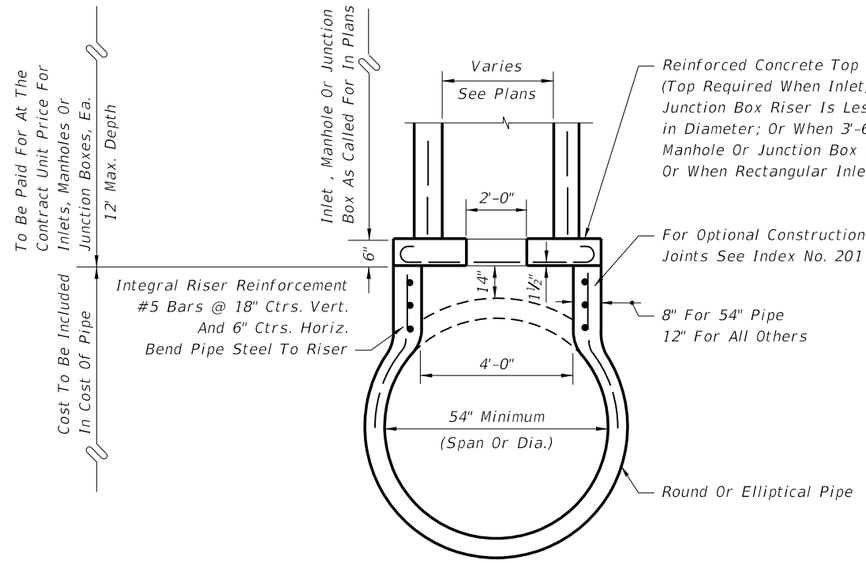

SECTION

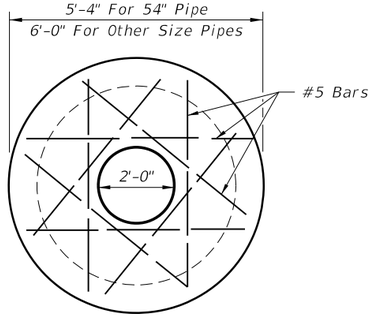

PLAN OF TOP

INLETS, MANHOLES OR JUNCTION BOXES ON INTEGRAL PRECAST CONCRETE RISER FOR CONCRETE PIPE

C:\d\projects\standards\roadway\00200-s\00280-03.dgn rd960rh 1:54:51 PM 6/28/2012

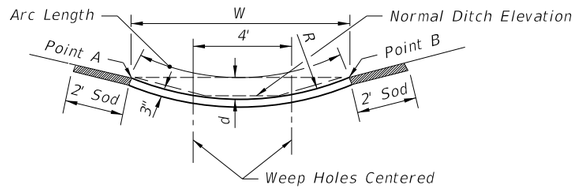

TO REPLACE:	W	d	R	Rows Of Weep Holes	Arc Length
6' Median Swale	6'	0.24'	19'	0	6.0'
1:6 Front Slopes; 1:4 Back Slope					
5' BW Ditch	10'	0.67'	19'	2	10.1'
4' BW Ditch	9'	0.54'	19'	2	9.1'
1:4 Front Slopes & Back Slope					
5' BW Ditch	9'	0.74'	14'	2	9.2'
4' BW Ditch	8'	0.58'	14'	1 (in center)	8.1'

For use only where side slopes are 1:4 or flatter. Point "A" and "B" are to be the same elevation and should be used to locate the paved section.

ALTERNATE DITCH PAVEMENT

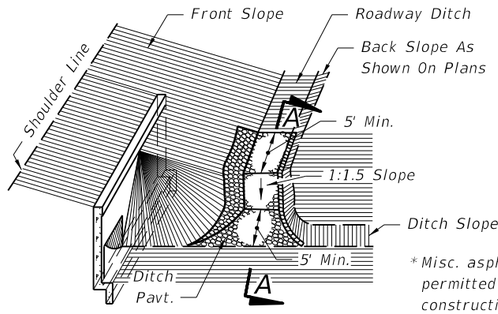

* Misc. asphalt will not be permitted for this type of construction.

JUNCTION OF ROADWAY DITCH* AND LATERAL DITCH

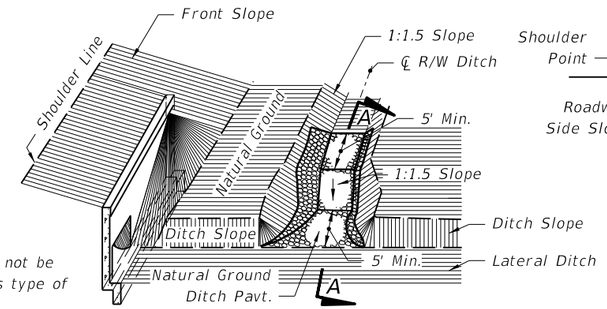

JUNCTION OF R/W DITCH* AND LATERAL DITCH

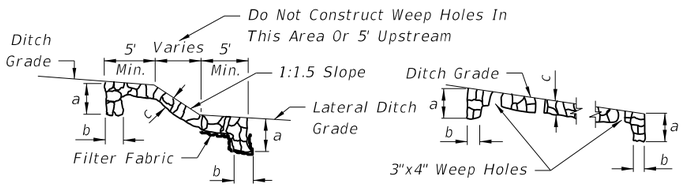

SECTION AA

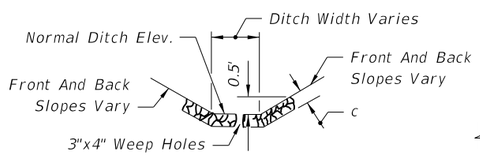

TYPICAL SECTION

PROFILE OF DITCH PAVEMENT AT LOCATIONS OTHER THAN JUNCTION WITH LATERAL DITCH

DITCH PAVEMENT								
Pavement Type	Dimensions			Payment Unit	Basis Of Estimate	Filter Fabric Type	Velocity Range	References & Remarks
	a	b	c					
Concrete	24"	6"	3"	SY	SY	D-6	Low-High	Section 524 of the Standard Specifications.
Miscellaneous Asphalt	24"	12"	4"	TN	0.2 TN/SY	None	Low-Moderate	Section 339.
Riprap (Sand-Cement)	24"	12"	4"	CY	0.11 CY/SY	D-4	Low-Moderate	Section 530. Grouting of joints required.
Riprap (Ditch Lining)				TN	TN	D-2	Moderate-High	Section 530.

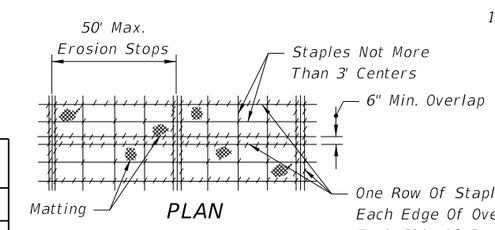

PLAN

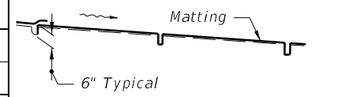

LONGITUDINAL SECTION

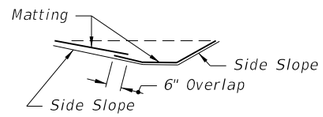

SECTION MATTING FOR DITCH

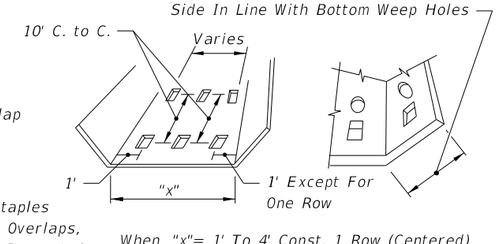

When "x"= 1' To 4' Const. 1 Row (Centered)
"x"= 5' To 7' Const. 2 Rows
"x"= 8' To 12' Const. 3 Rows
"x"= 13' To 17' Const. 4 Rows
"x"= 18' To 22' Const. 5 Rows

Note: All weep holes to be 3"x4" rectangle or 4" or 5" dia. circle hole. ½ cu. ft. (12" x 12" x 6") of No. 6 aggregate to be placed under each hole. 1 sq. ft. of galv. wire mesh (¼" openings) shall be placed between the aggregate and the concrete. Cost of holes, aggregate and wire mesh to be included in the cost of ditch pavement.

WEEP HOLE ARRANGEMENT

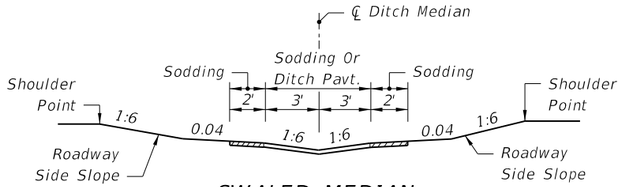

SWALED MEDIAN (No Weep Holes)

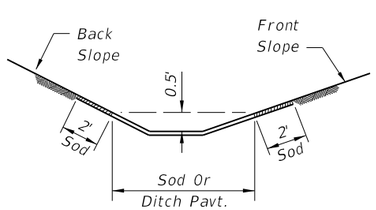

ROADWAY SIDE DITCH

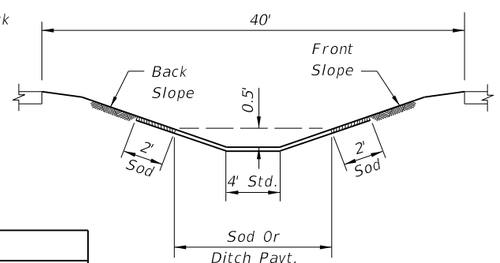

40' MEDIAN

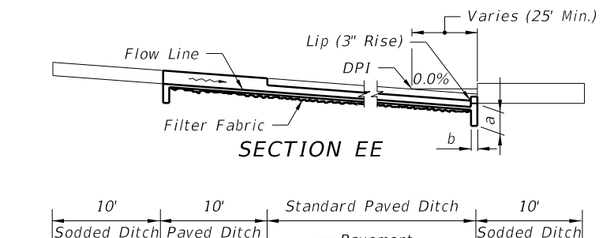

SECTION EE

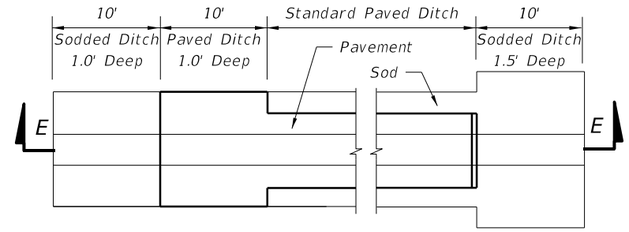

PLAN

PAVED DITCH END TREATMENT

GENERAL NOTES

1. Type of ditch pavement shall be as shown on plans.
2. In concrete ditch pavement, contraction joints are to be spaced at 25' maximum intervals, or as directed by the Engineer. Contraction joints may be either formed (construction joint) or tooled. No open joints will be permitted in concrete ditch pavement.

   Expansion joints with ½" preformed joint filler shall be constructed at all inlets, endwalls, and at intervals of not more than 200'.
3. Lip at end of ditch pavement shall normally be located downstream of DPI or on flatter grades where there is a decrease in ditch velocity.
4. Toewalls are to be used with all ditch paving. A toewall is not required adjacent to drainage structures.
5. When directed by the Engineer, weep hole spacing may be reduced to 5' minimum.
6. For junction of R/W ditch spillway and lateral ditch, sides of paving to be 1' high minimum.
7. For ditch pavements requiring filter fabric, the fabric shall be placed directly beneath the pavement for the entire length and width of the pavement. When weep holes with aggregate are used, the filter fabric shall be placed below the aggregate to form a mat continuous with or underlapping the pavement fabric. (See Index No. 199 for fabric type and application).
8. Ditch pavement requiring reinforcement shall be detailed in the plan.
9. Cost of plastic filter fabric to be included in the contract unit price for ditch pavement.
10. Sodding to be paid for under contract unit price for Performance Turf, SY

C:\d\projects\standards\roadway\00200-s\00281-01.dgn rd960rh 1:54:53 PM 6/28/2012

LAST REVISION	REVISION	DESCRIPTION:		INDEX NO.	SHEET NO.
07/01/07			FDOT DESIGN STANDARDS 2013	281	1

DITCH PAVEMENT AND SODDING

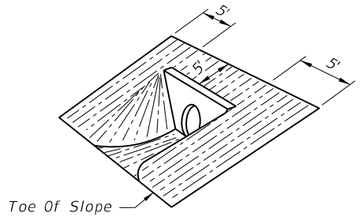

Note: Sodding quantities for each endwall to be determined by the designer from this detail.

(EXCEPT INDEX NO. 250)
STRAIGHT ENDWALL

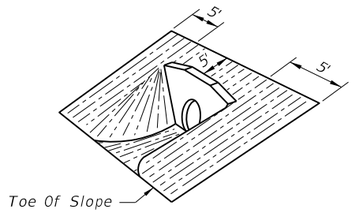

STRAIGHT ENDWALL
INDEX NO. 250

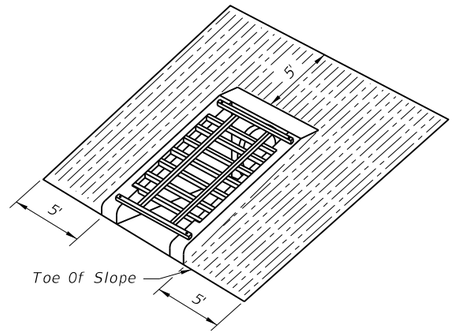

U-TYPE ENDWALL
INDEX NO. 261

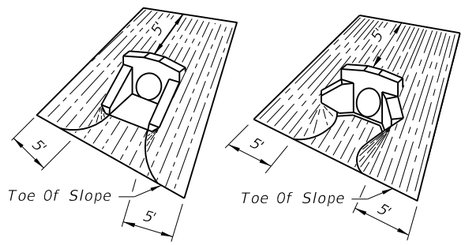

U-TYPE WINGS 45° WINGS

WINGED ENDWALLS
INDEX NO. 266

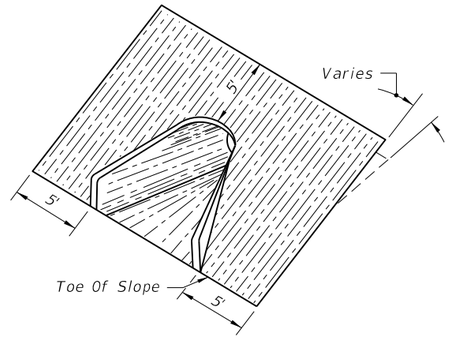

FLARED END SECTION
INDEX NO. 270

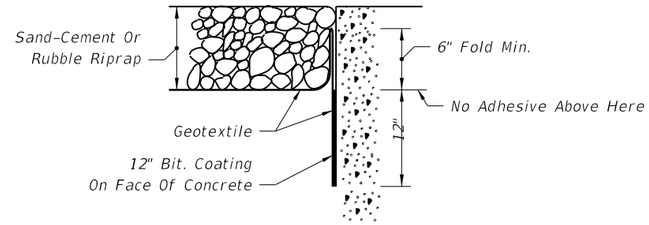

BONDED OPTION

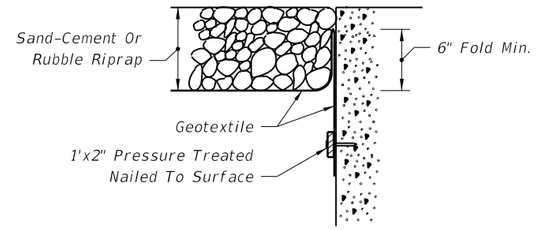

NAILED OPTION

Note: Either option may be used unless otherwise called for in the plans.

GEOTEXTILE PLACEMENT AT CONCRETE STRUCTURE

SOD QUANTITIES (SY)

PIPE SIZE	INDEX NO. 250												INDEX NO. 261				INDEX NO. 266				INDEX NO. 270
	SLOPE												SLOPE				SLOPE				ALL SLOPES
	1:2			1:3			1:4			1:6			1:2	1:3	1:4	1:6	1:2	1:3	1:4	1:6	
	PIPES												PIPES				PIPES				PIPES
	1	2	3	1	2	3	1	2	3	1	2	3	1	1	1	1	1	1	1	1	1
12"																	14	15	18	22	10
15"	19	21	24	22	26	29	26	30	33	34	38	43	13 (15)	16	17	23	15	17	20	25	11
18"	21	24	27	25	29	33	30	34	38	39	44	50	14 (16)	17	19	25	16	18	22	28	11
21"																					12
24"	26	30	34	32	37	42	38	44	50	50	58	66	15 (17)	19	21	28	19	22	26	34	14
27"																					15
30"	31	37	42	39	46	53	46	55	63	62	74	85	17 (18)	21	24	32	21	25	30	40	16
36"	37	44	52	46	56	65	56	67	79	76	91	107					24	29	35	47	18
42"	43	53	62	55	67	79	67	82	96	91	111	132					27	32	39	54	19
48"	50	62	73	64	79	93	78	97	115	108	133	158					30	36	44	61	21
54"	57	71	85	74	92	110	91	113	136	126	157	188									21
60"																					22
66"																					25
72"																					26
													() Endwall With Baffles								

SOD

C:\d\projects\standards\roadway\00200-s\00281-02.dgn
rd960rh
1:54:55 PM
6/28/2012

LAST REVISION	REVISION	DESCRIPTION:		FDOT DESIGN STANDARDS 2013	DITCH PAVEMENT AND SODDING	INDEX NO.	SHEET NO.
00						281	2

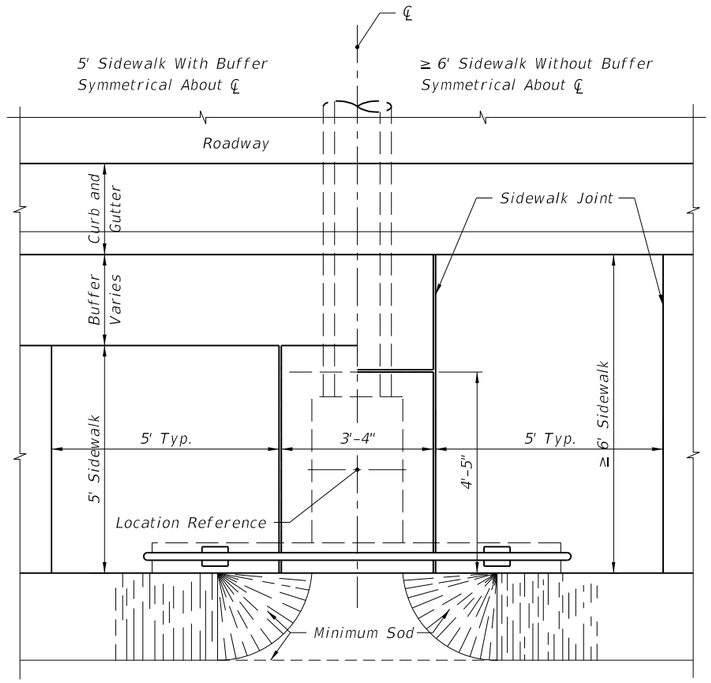

PLAN

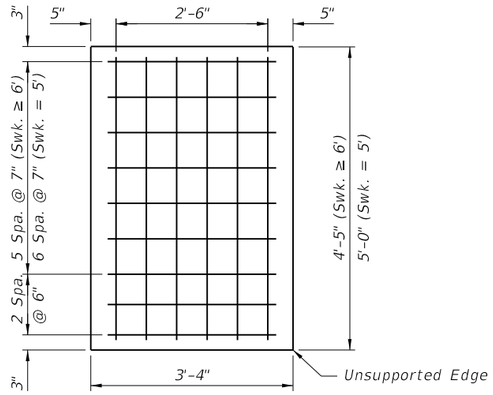

SLAB REINFORCEMENT

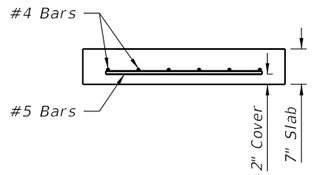

SLAB SECTION

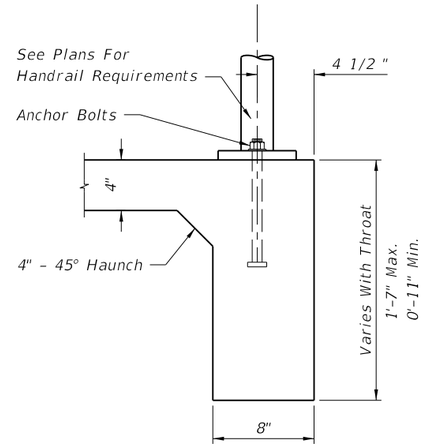

SECTION BB

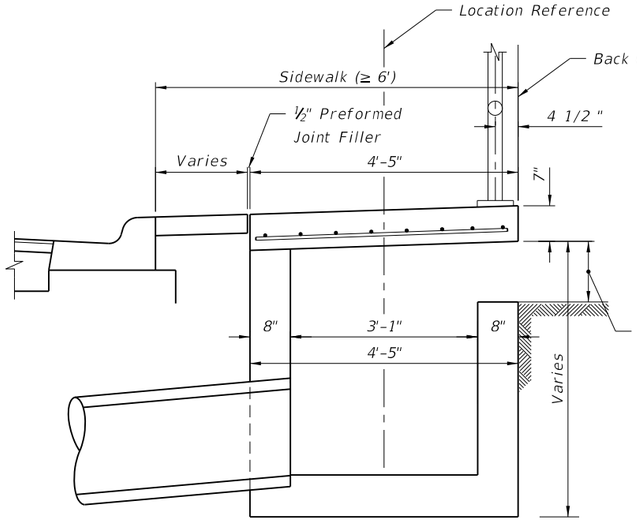

≥ 6' SIDEWALK
SECTION AA

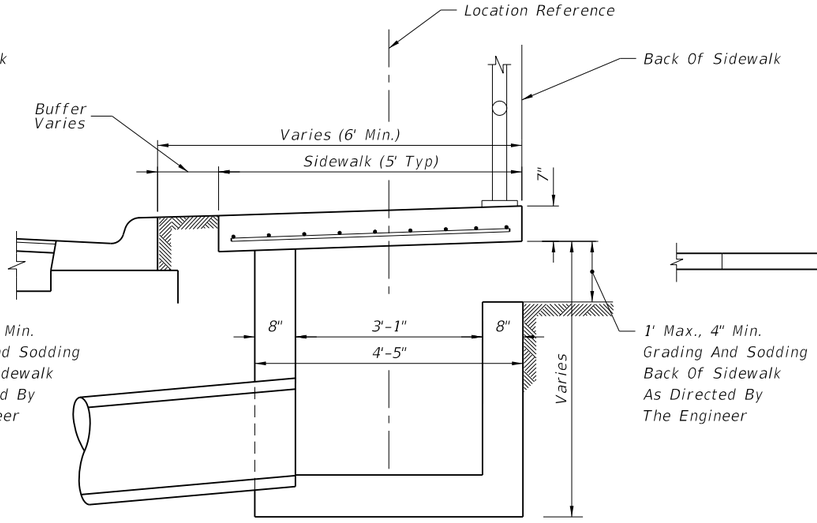

5' SIDEWALK
SECTION AA

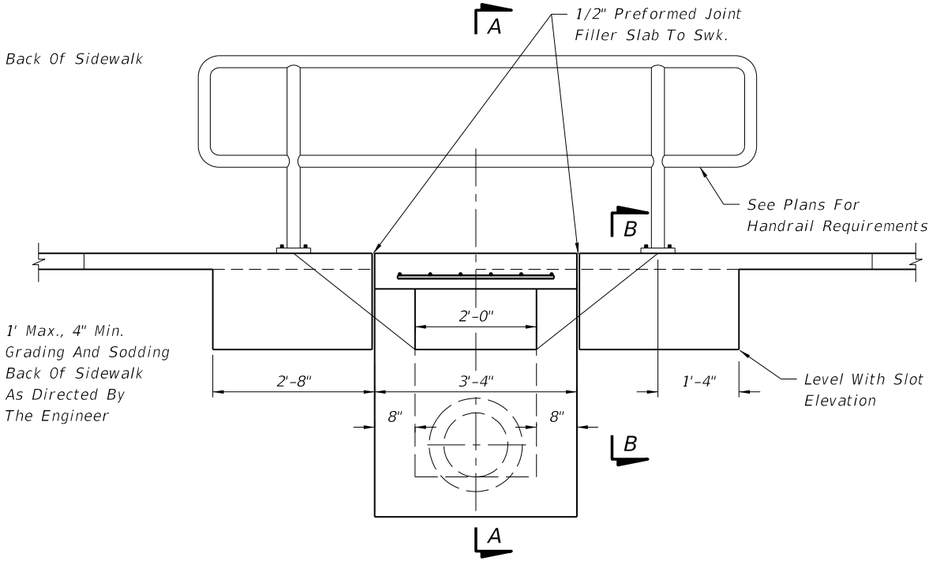

FRONT ELEVATION

Notes:

1. For additional details see Index No. 232.

2. Inlet to be paid for under the contract unit price for Inlets (Ditch Bottom Type C Modified), EA. Handrail to be paid for under the contract unit price for Pipe Handrail, (Material), LF.

INLET TYPE C (MODIFIED)

LAST REVISION	REVISION	DESCRIPTION:	FDOT DESIGN STANDARDS 2013	BACK OF SIDEWALK DRAINAGE	INDEX NO.	SHEET NO.
01/01/12					282	1

C:\d\projects\standards\roadway\00200-s\00282-01.dgn
rd960rh
1:54:59 PM
6/28/2012

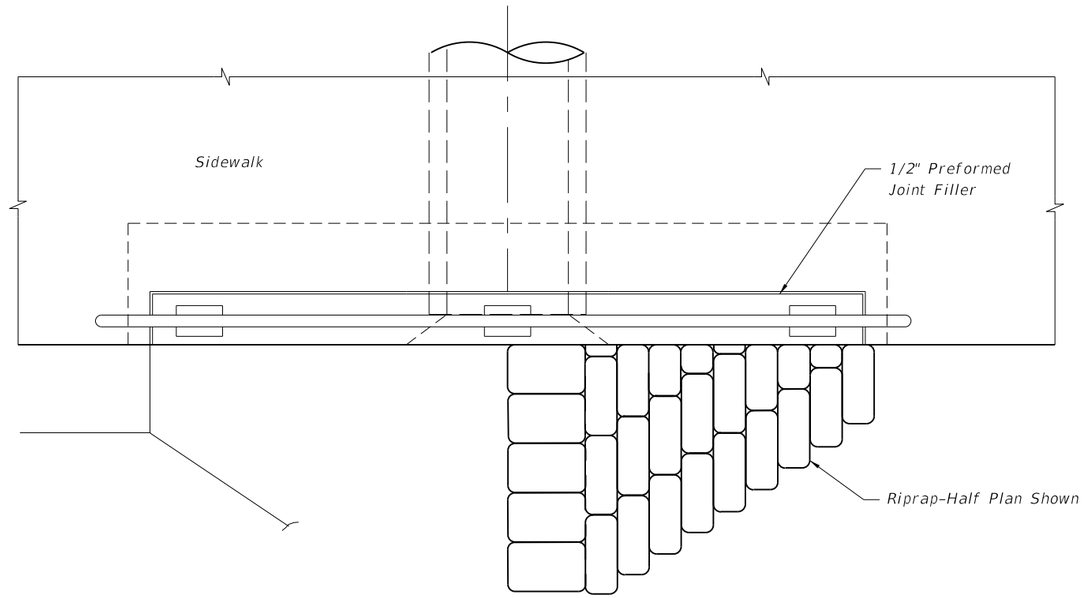

PLAN

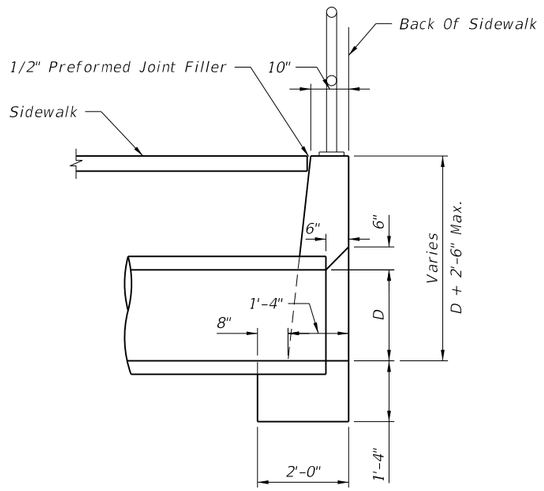

SECTION AA

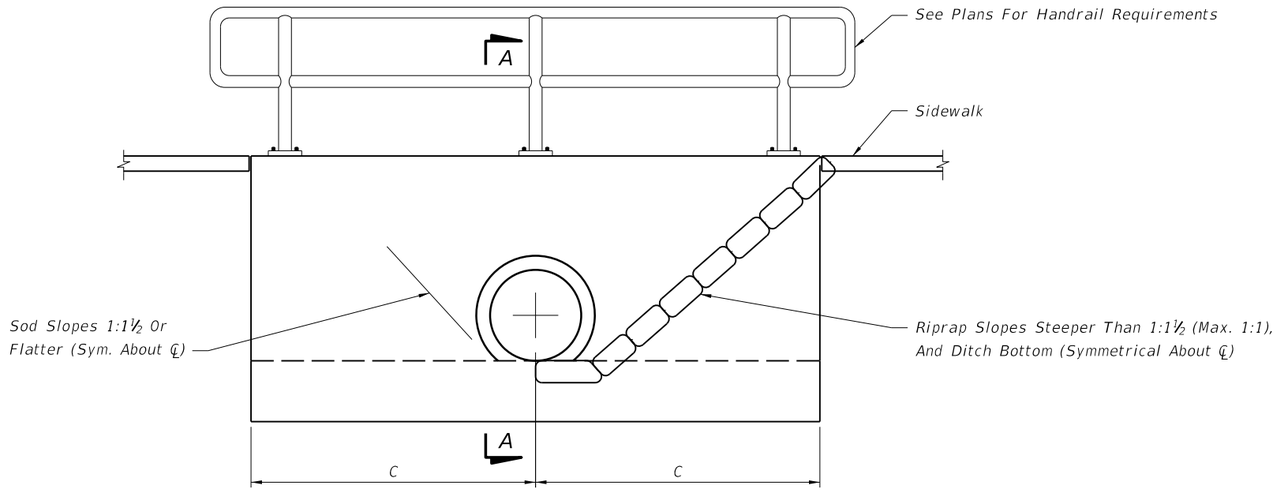

FRONT ELEVATION

Notes:

1. Maximum pipe size shall be 24" diameter.
2. Grading back of sidewalk varies and shall be done as directed by the Engineer.
3. Concrete quantities shown are for maximum wall heights, and shall be basis for estimate and payment.
4. Riprap quantities shown are for estimate purposes only. Cost of riprap to be included in cost of the endwall.
5. Endwalls to be paid for under the contract unit price for Concrete Class I (Endwalls), CY. Handrail to be paid for under the contract unit price for Pipe Handrail, (Material), LF.

Pipe Size (in)	C	Concrete Class I (CY)	Sand-Cement Riprap (CY)
15	4'-9"	2.3	1.1
18	5'-3"	2.6	1.3
24	6'-3"	3.3	1.8

SPECIAL CONCRETE ENDWALL

LAST REVISION	REVISION	DESCRIPTION:			INDEX NO.	SHEET NO.
07/01/09			FDOT DESIGN STANDARDS 2013	BACK OF SIDEWALK DRAINAGE	282	2

C:\d\projects\standards\roadway\00200-s\00282-02.dgn
rd960rh
1:55:01 PM
6/28/2012

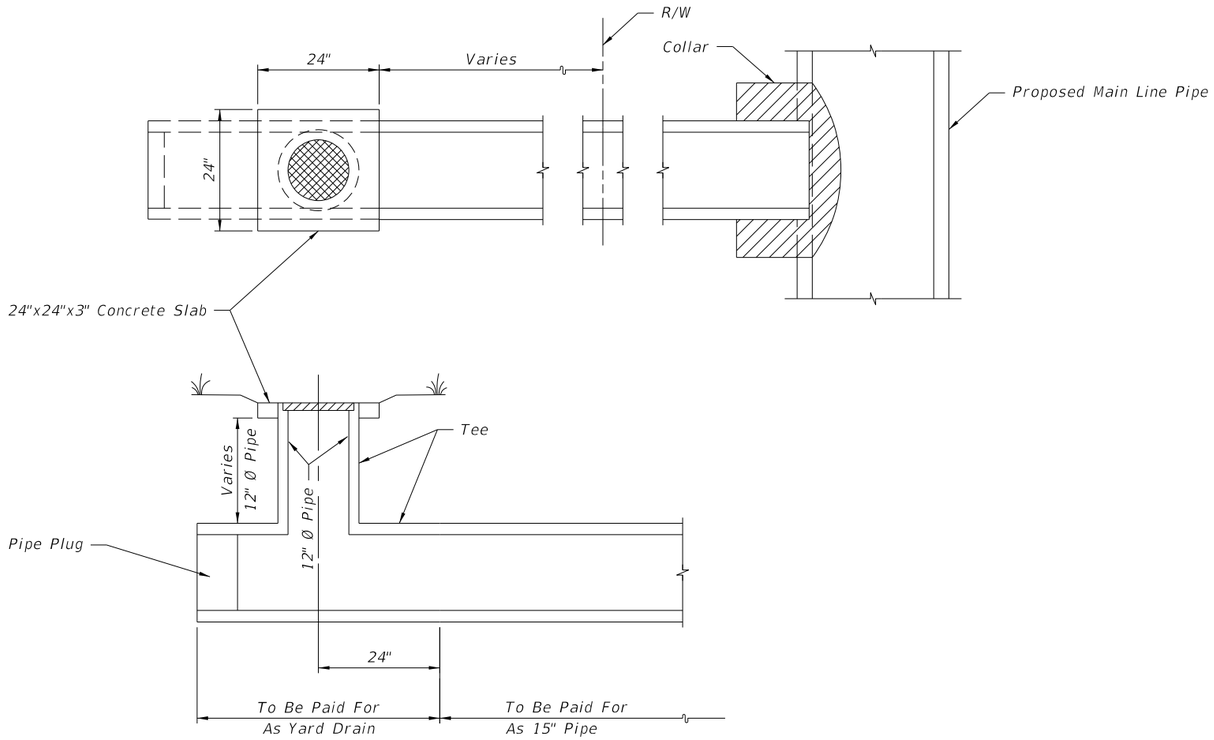

YARD DRAIN ITEM INCLUDES:

① 15" x 15" x 12" Concrete or PVC Tee 4' long.

② One (1) Grate-Neenah No. R-4030, Phoenix No. P-1058, U.S. Foundry No. 5605 or equivalent.

③ 12" pipe as necessary.

④ 0.04 Cubic yards concrete for slab.

YARD DRAINS

Notes:

1. Yard drains to be located outside the R/W. Drainage area should not exceed 750 SF (grate flow 0.1 Cfs).
2. Yard drains may be constructed at the option of the property owner as shown on the plans.
3. Cost of plugs and collars to be included in the cost for 15" pipe. For collar and plug details see Index No. 280.
4. Yard drains to be paid for under the contract unit price for Yard Drains, EA.

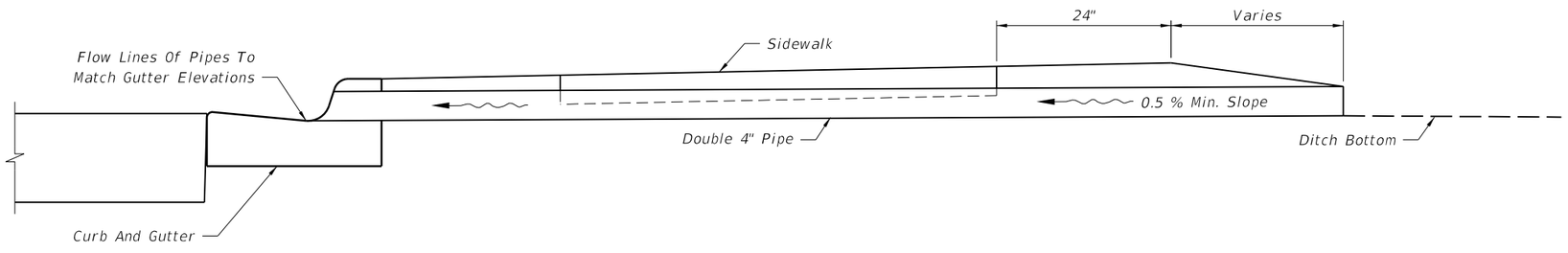

SHALLOW DITCHES

Notes:

1. To be constructed at locations as directed by the Engineer.
2. Either cast iron pipe or PVC rigid conduit, U.L. listed for direct sunlight exposure, Schedule 40, may be used.
3. Pipe to be paid for under the contract unit price for either Cast Iron Soil Pipe (Standard) (4"), LF or Polyvinyl Chloride Pipe Culvert (4"), LF.

C:\d\projects\standards\roadway\00200-s\00282-03.dgn
rd960rh
1:55:03 PM
6/28/2012

LAST REVISION	REVISION	DESCRIPTION:		FDOT DESIGN STANDARDS 2013	BACK OF SIDEWALK DRAINAGE	INDEX NO.	SHEET NO.
07/01/09						282	3

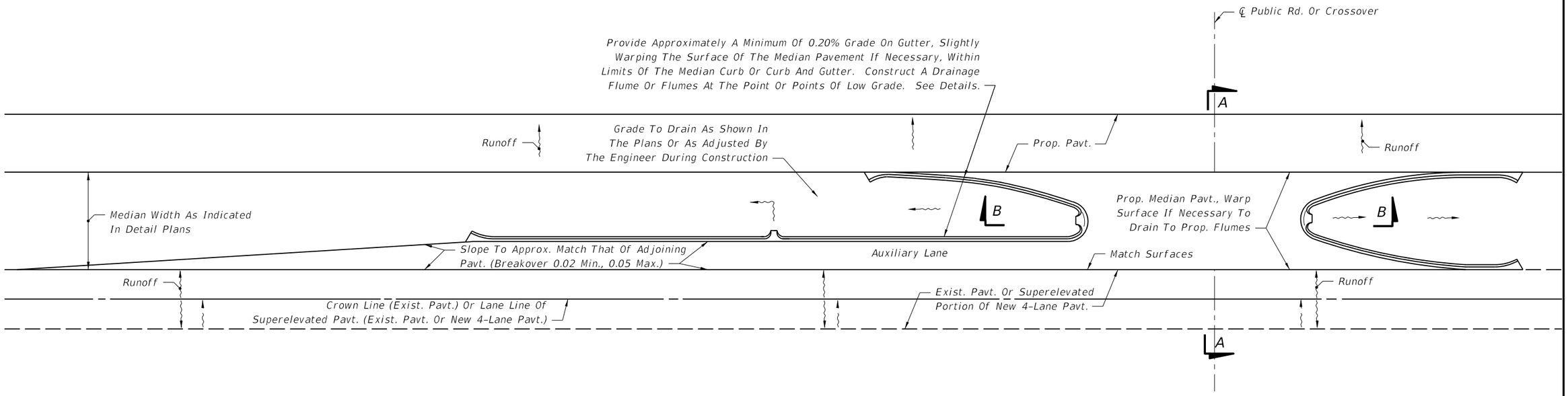

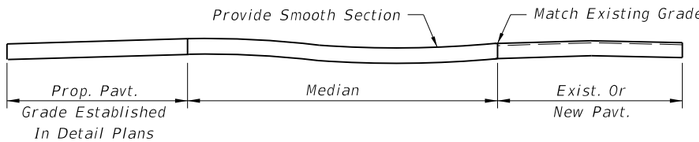

SECTION AA

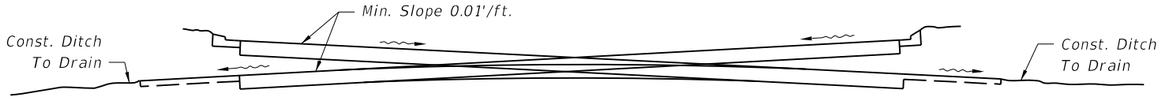

SECTION BB

(May Drain From Any Point Designated In the Plans Or As Adjusted By The Engineer During Construction)

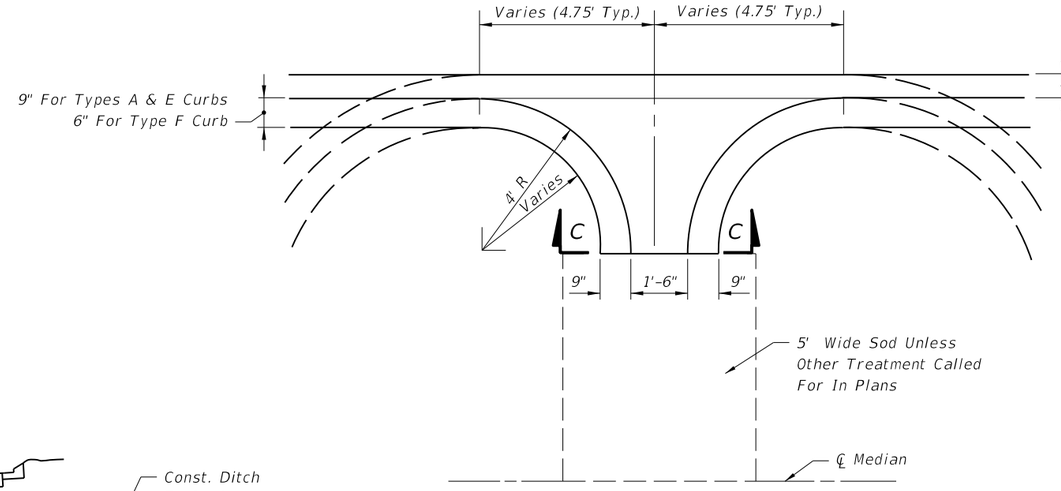

FLUME DETAIL

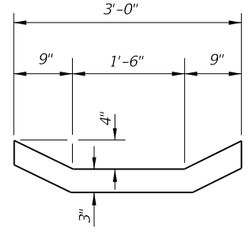

SECTION CC

GENERAL NOTES

1. These details are to apply to projects which provide for the conversion of 2-lane sections to 4-lane divided highway sections and for superelevated sections of new 4-lane divided highways. Layout above is illustration only. Cost of flumes to be included in the contract price for Curb or Curb and Gutter. Sod to be paid for under the contract unit price for Performance Turf, SY.

2. Flumes to be located in low point of noses and at other points as designated in the plans. The locations may be adjusted by the Engineer during construction.

LAST REVISION	REVISION	DESCRIPTION:				
07/01/07			FDOT DESIGN STANDARDS 2013	MEDIAN OPENING FLUME	INDEX NO. 283	SHEET NO. 1

C:\d\projects\standards\roadway\00200-s\00283-01.dgn rd960rh 1:55:05 PM 6/28/2012

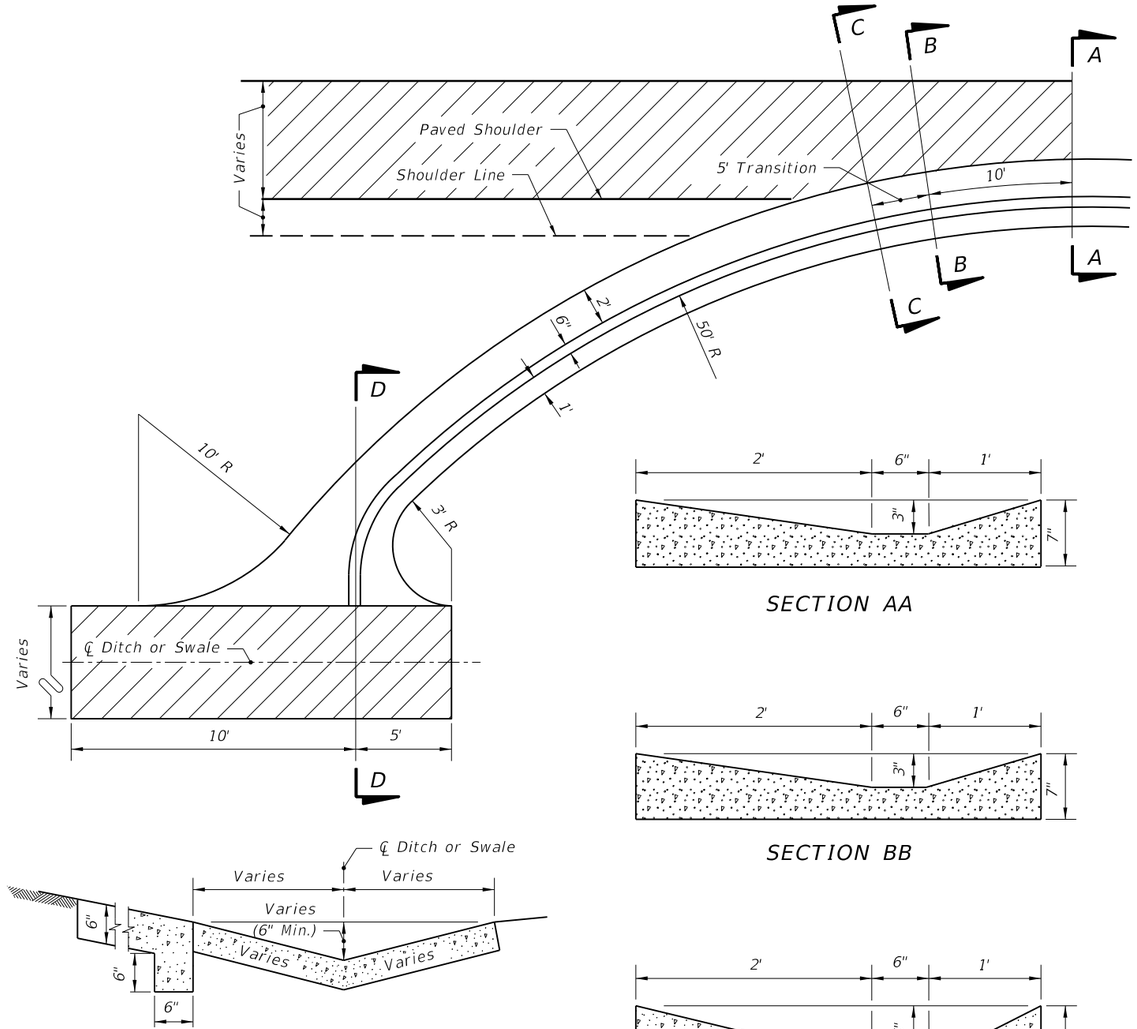

1. Spillway to be paid for as Shoulder Gutter, L.F.

2. If spillway empties into an unpaved ditch, the detail should be modified as necessary.

DETAIL OF CONCRETE SPILLWAY AT END OF SHOULDER GUTTER

(TO BE USED WHERE INLETS, PIPES & ENDWALLS ARE IMPRACTICAL)

C:\d\projects\standards\roadway\00200-s\00284-01.dgn
6/28/2012 1:55:07 PM rd960rh

LAST REVISION	REVISION	DESCRIPTION:		FDOT DESIGN STANDARDS 2013	CONCRETE SHOULDER GUTTER SPILLWAY	INDEX NO.	SHEET NO.
07/01/09						284	1

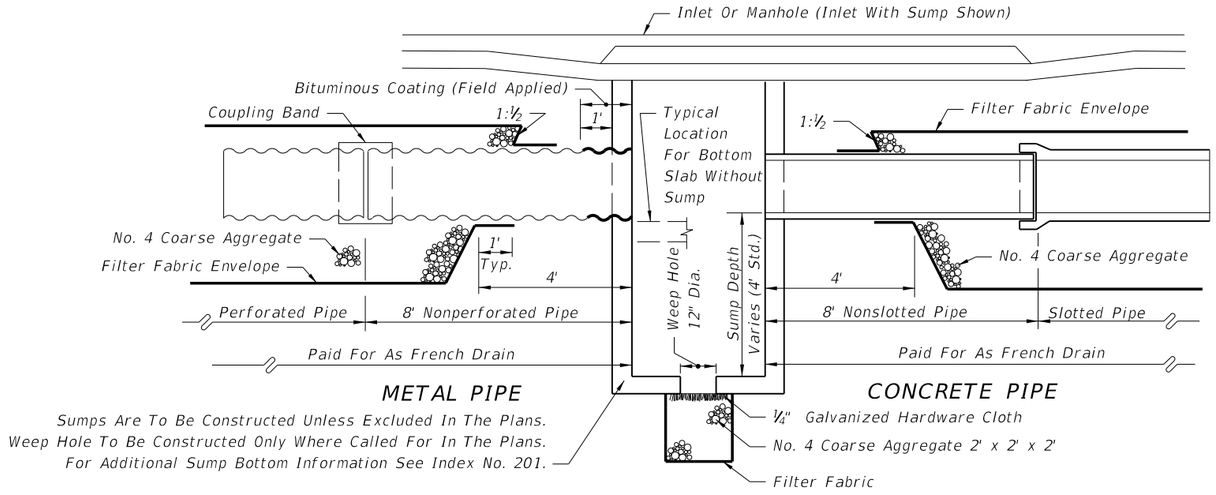

LONGITUDINAL SECTION

GENERAL NOTES

1. Pipe shall be any of the optional types permitted in Section 443 of the Specifications unless otherwise restricted in the plans. Dissimilar types of pipe will not be permitted in a continuous run of pipe.
2. Concrete pipe shall be placed with the slots positioned on sides.
3. Alignment joints are standard (gaskets not required). Recorrugation of metal pipe ends not required.
4. The contractor may submit other methods of providing slots having equal or greater area of opening, for approval by the Engineer.
5. Filter fabric shall be Type D-3 meeting the requirements of Section 985. All filter fabric joints shall lap a minimum of one (1) foot.
6. The standard cross section shall be constructed unless other section(s) described or detailed in the plans.
7. For supplemental details see Index No. 280.
8. The contractor shall take the necessary precautions to prevent contamination of the trench with sand, silt and foreign materials.
9. French drains shall be paid for under the contract unit price for French Drains, LF. The unit price shall include the cost of pipe, pipe plugs, pipe fittings, coarse aggregate and filter fabric in place, and the cost for trench excavation, backfill and compaction. The unit price shall also include the cost for disposal of surplus excavated materials and cost for restoration of pavement removed or damaged by french drain construction, but shall not include payments for items paid for elsewhere.

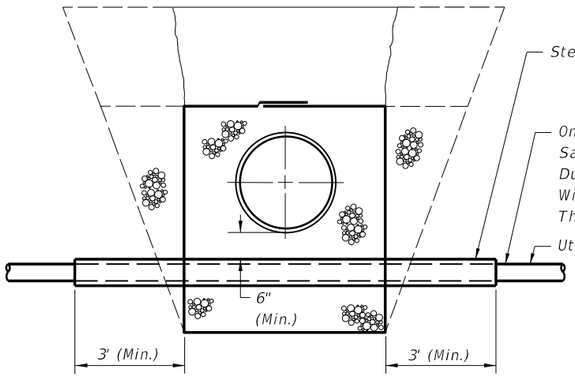

ROUND PIPE SHOWN
UTILITY PIPES THRU FRENCH DRAIN

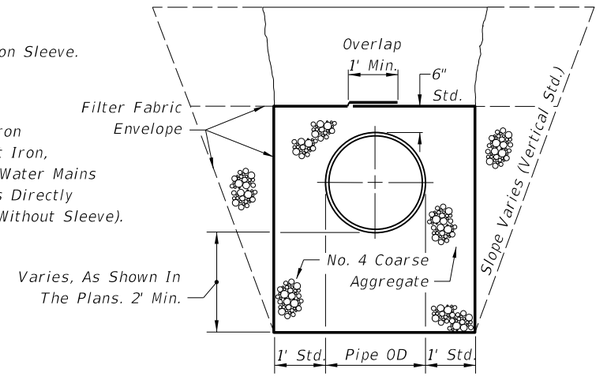

ROUND PIPE SHOWN
STANDARD CROSS SECTION (ENLARGED)

DESIGN NOTES

1. Pipe invert should be at or above the water table whenever possible.
2. French drains with minor dimensional changes or otherwise different from the standard cross-section shall be either described or detailed in the plans. French drains with significantly different cross-sections shall be detailed in the plans.

FRENCH DRAIN SYSTEM

C:\d\projects\standards\roadway\00200-s\00285-01.dgn
rd960rh
1:55:08 PM
6/28/2012

LAST REVISION	REVISION	DESCRIPTION:		FDOT DESIGN STANDARDS 2013	FRENCH DRAIN	INDEX NO.	SHEET NO.
07/01/10						285	1

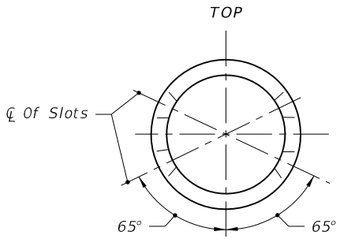

15"-30"

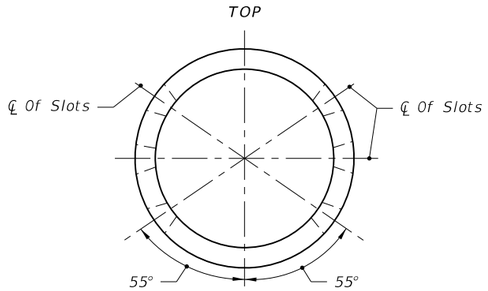

36"-72"

ELLIPTICAL PIPE		
Pipe Size	Slot Cut Opening c	
	Min.	Max.
14"x23"	10"	12"
19"x30"	14"	16"
24"x38"	14"	16"
29"x45"	20"	22"
34"x53"	20"	22"
38"x60"	20"	22"

ROUND PIPE		
Pipe Size	Slot Cut Opening c	
	Min.	Max.
15"	12"	14"
18"	12"	14"
24"	16"	18"
30"	16"	18"
36"	22"	24"
42"	22"	24"
48"	22"	24"
54"	24"	26"
60"	24"	26"
66"	24"	26"
72"	24"	26"

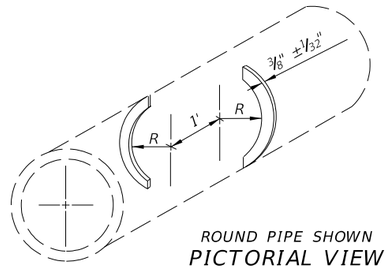

ROUND PIPE SHOWN
PICTORIAL VIEW

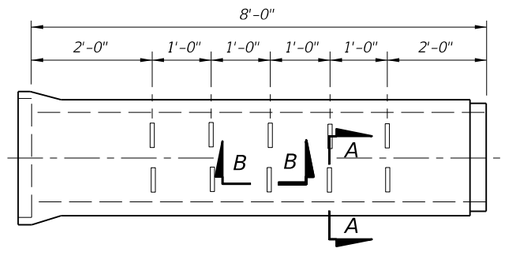

SIDE VIEW

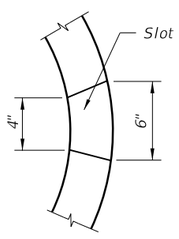

SECTION AA

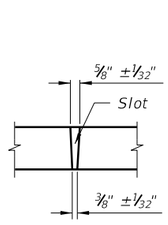

SECTION BB

OPTION A - ROUND PIPE

A curved cut is acceptable provided the control dimension is maintained (Typical For Elliptical & Round Pipe)

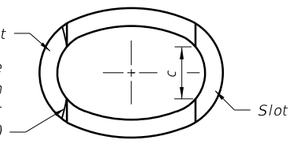

ELLIPTICAL PIPE

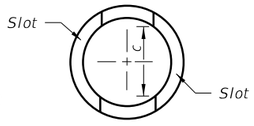

ROUND PIPE

SECTION AA

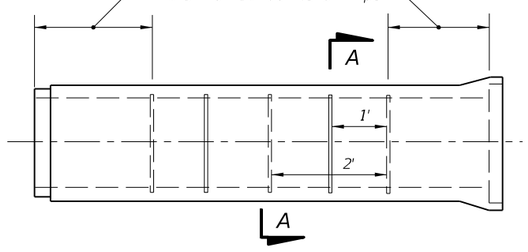

SIDE VIEW

OPTION B - ROUND OR ELLIPTICAL PIPE

SLOTTED PIPE OPTIONS

C:\d\projects\standards\roadway\00200-s\00285-02.dgn
1:55:11 PM
rd960rh
6/28/2012

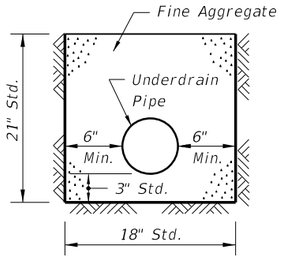

TYPE I

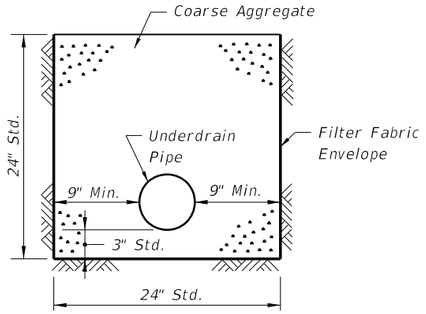

TYPE II

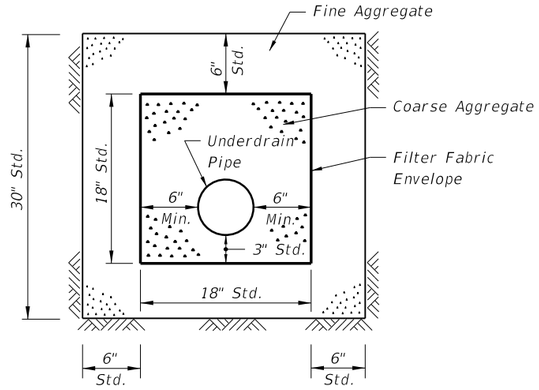

TYPE III

DESIGN NOTES

1. The type of underdrain should be selected to meet design water removal rate and soil conditions. Caution is prescribed in the use of these typical sections since special designs may be required to satisfy project conditions.

2. Type I underdrain is intended for minimum water removal conditions.

3. Type II underdrain is intended for moderate water removal conditions. Where reactive conditions may create chemical clogging, the use of an inert material and/or elimination of the filter fabric may be necessary.

4. Type III underdrain is intended for maximum water removal conditions. Filter fabric is required between the coarse aggregate or fine aggregate including those described in general notes 2 and 3. Design note 3 applies for reactive conditions.

5. Type V underdrain is intended for use in detention basins and other locations which require a filtration system. The standard fine aggregate specified for Type V underdrain conforms to filtration gradation requirements of Chapter 62-25 FAC.

6. The designer should detail in the plans, the location of:
(a) Type V underdrain, (b) nonstandard locations of Type I, II, and III underdrain, (c) underdrain inspection boxes, (d) cleanouts for Type V underdrain, and (e) underdrain outlet pipes.

7. The designer should specify the flow line elevations at the beginning, bends, junctions and ends of underdrain pipes and outlet pipes.

8. The designer should evaluate whether an external filter fabric envelope is required around underdrain Types I and III. When required, fabric shall be specified in the plans.

GENERAL NOTES

1. The underdrain pipe shall be either 4" smooth or 5" corrugated tubing unless otherwise shown in the plans. The size to be furnished will be based on the nominal internal diameter of a pipe with a smooth interior wall. Except when prohibited by the plans, the special provisions or this standard, pipe with a corrugated interior wall may be provided based on the following size equivalency.

   4" smooth interior equivalent to 5" corrugated interior
   5" smooth interior equivalent to 6" corrugated interior
   6" smooth interior equivalent to 8" corrugated interior
   8" smooth interior equivalent to 10" corrugated interior

2. Fine aggregate shall be quartz sand meeting the requirements of Sections 902-4 of the Standard Specifications.

3. Coarse aggregate shall be gravel or stone meeting the requirements of Sections 901-2 or 901-3. The gradation shall meet Section 901, Grades 4, 467, 5, 56 or 57 stone unless otherwise shown restricted in the plans.

4. Underdrain Type I, II, III and V shall be in accordance with Section 440.

5. Filter fabric shall be Type D-3 (See Index No. 199). The internal filter fabric of Type V underdrain shall have a permittivity of 0.7 /sec. and an AOS of #40 sieve.

6. When Type I is used, a filter fabric sock meeting Section 948 is required.

7. See Index No. 500 for the standard location of Type I, II, and III underdrain. The location of Type V underdrain and nonstandard locations of Type I, II, and III underdrain will be as detailed in the plans.

8. All filter fabric joints shall overlap a minimum of 1'. The internal filter fabric of Type V underdrain shall overlap into the coarse aggregate or the fine aggregate a minimum of 1'.

9. Underdrain outlet pipes shall be nonperforated and all bends shall be made using ⅛ (45 deg.) elbows. 90 deg. bends shall be constructed with two ⅛ elbows separated by at least 1' of straight pipe. Outlet pipes stubbed into inlets or other drainage structures shall be not less than 6" above the structure flow line. Outlet pipes discharging to grassed areas shall have concrete aprons, hardware cloth, and bordering sod as shown in Index No. 287 for Edgedrain outlets.

10. Pay Item shall be based on the size of the smooth interior products. The contract unit price for Underdrain, LF, shall include the cost of pipe, fittings, aggregate, sock, filter fabric, underdrain cleanouts, and concrete aprons.

    The contract unit price for Underdrain Outlet Pipe, LF, shall be full compensation for trench excavation, pipe and fittings, concrete aprons, hardware cloth for concrete aprons, stubbing into drainage structures, backfill in place, and disposal of excess materials.

    The contract unit price for Underdrain Inspection Box, EA. shall be for the number completed and accepted.

6/28/2012 1:55:12 PM rd960rh C:\d\projects\standards\roadway\00200-s\00286-01.dgn

LAST REVISION	REVISION	DESCRIPTION:		FDOT DESIGN STANDARDS 2013	UNDERDRAIN	INDEX NO.	SHEET NO.
07/01/07						286	1

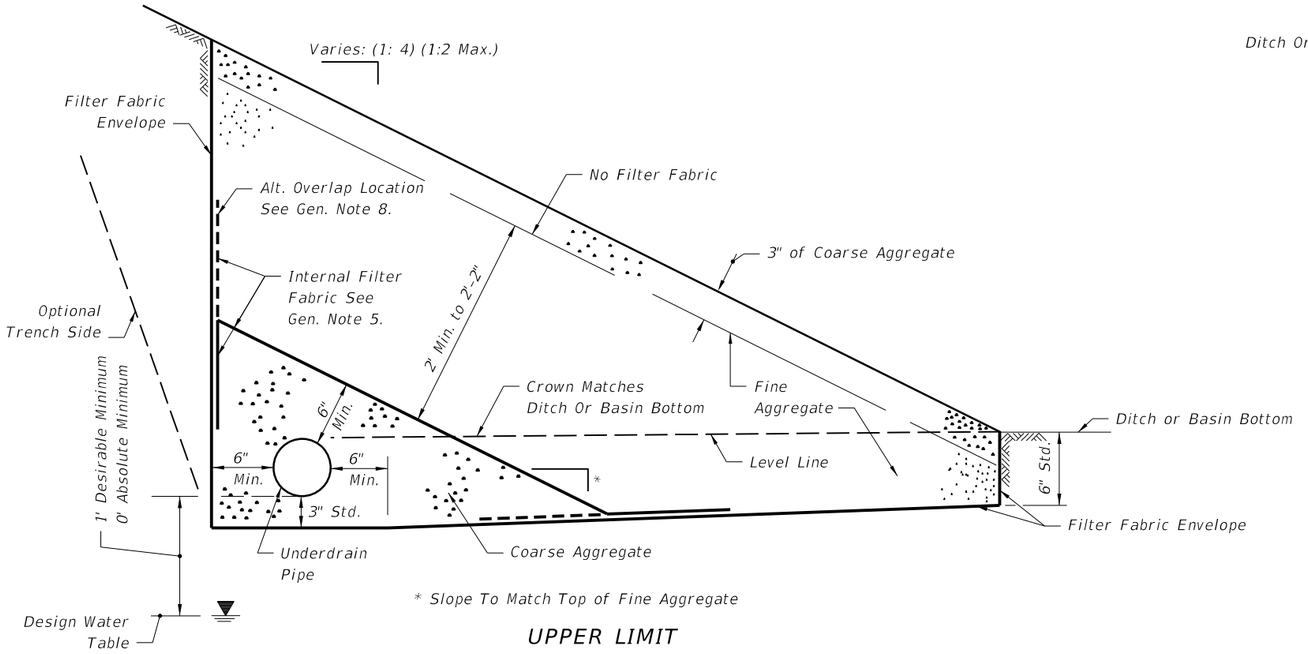

UPPER LIMIT

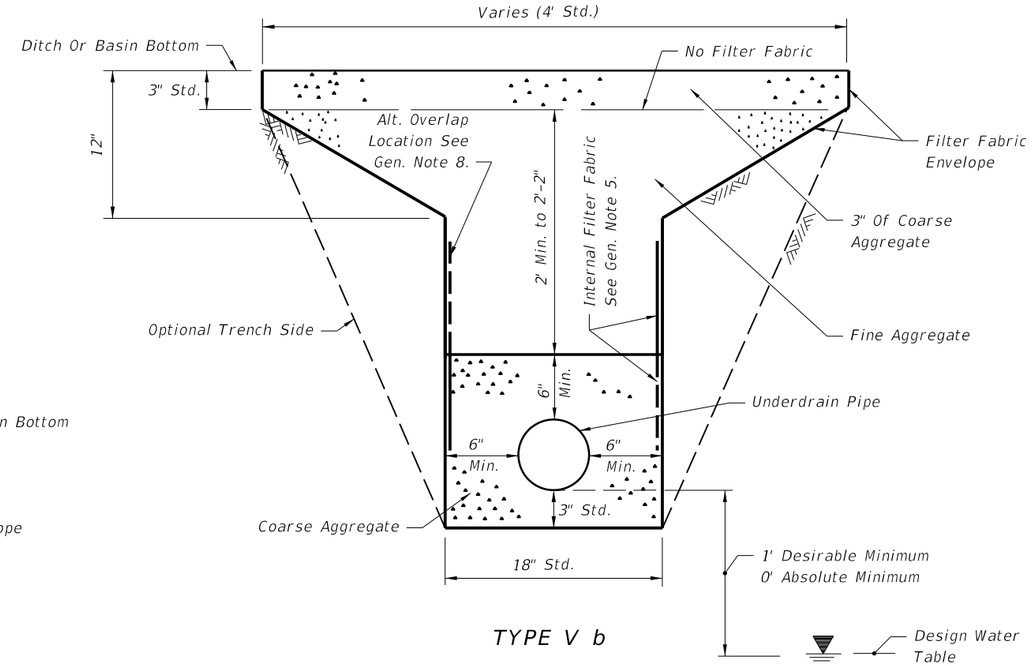

TYPE V b

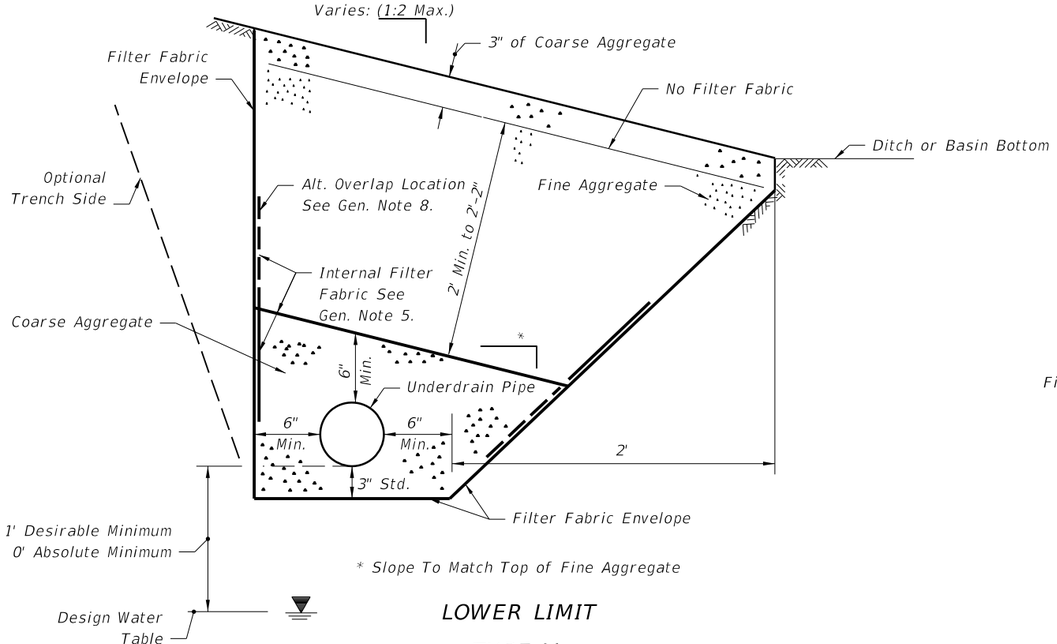

LOWER LIMIT

TYPE V a

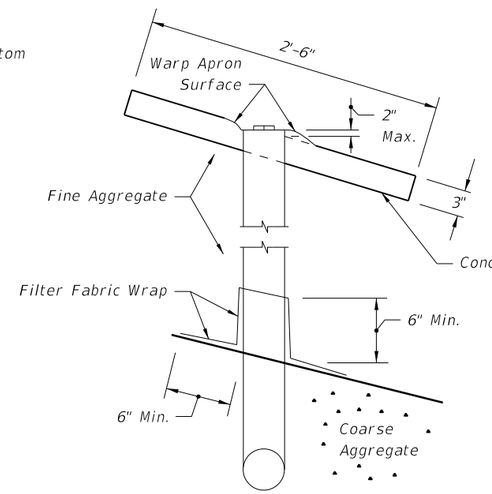

SECTION AA

CLEANOUT FOR TYPE V UNDERDRAIN

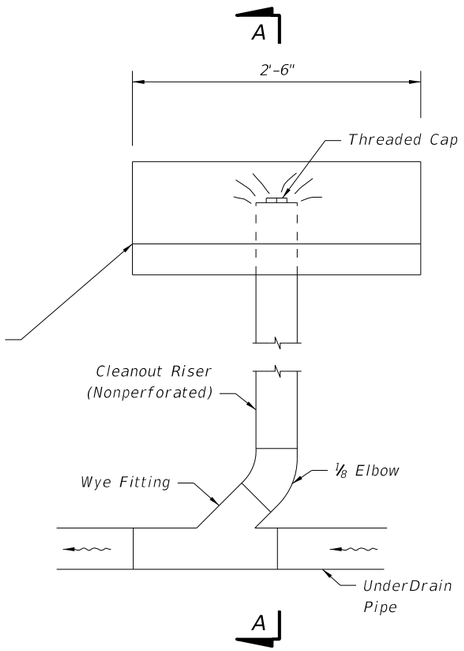

LAST REVISION	REVISION	DESCRIPTION:			INDEX NO.	SHEET NO.
02			FDOT DESIGN STANDARDS 2013	UNDERDRAIN	286	2

C:\d\projects\standards\roadway\00200-s\00286-02.dgn rd960rh 1:55:15 PM 6/28/2012

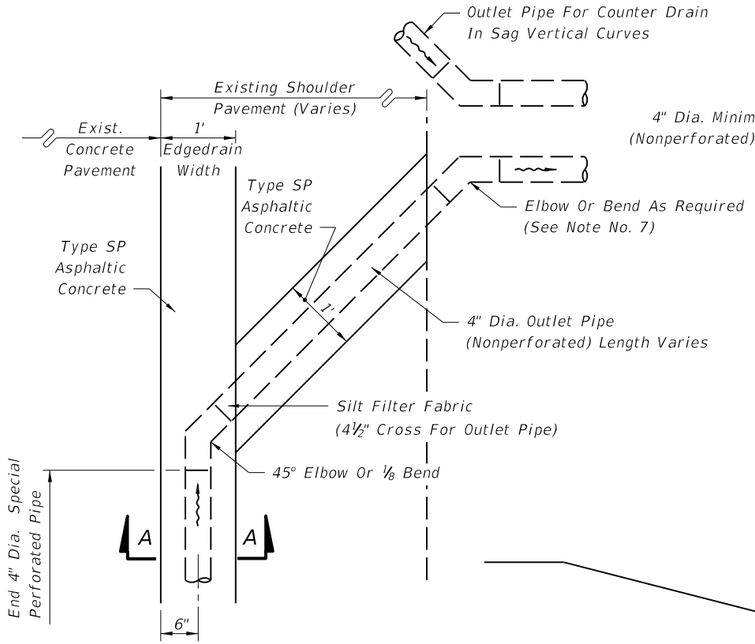

ALIGNMENT OF OUTLET PIPE

NOTE: For Section AA see following Sheets.

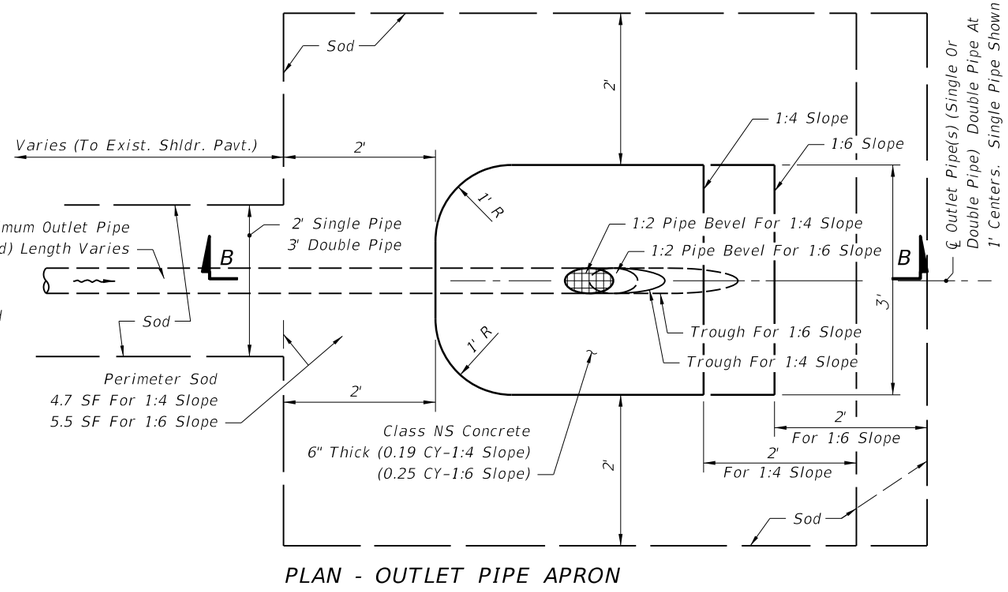

PLAN - OUTLET PIPE APRON

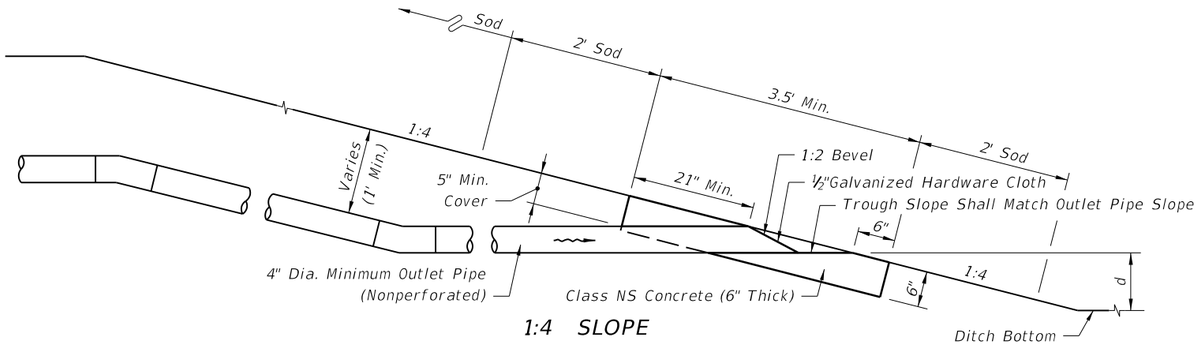

1:4 SLOPE

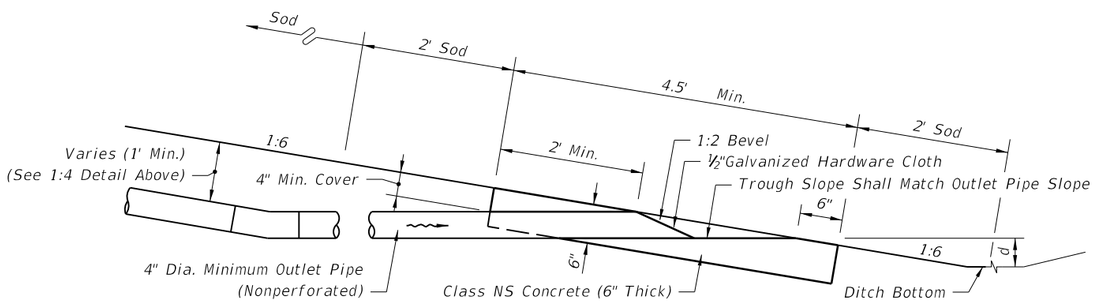

1:6 SLOPE

SECTIONS BB

4" EDGEDRAIN

EDGEDRAIN OUTLET

d = 1.75' std. for grassed ditches; 0.5' std. for paved ditches
[less is acceptable to provide minimum 0.1% outlet pipe slope]

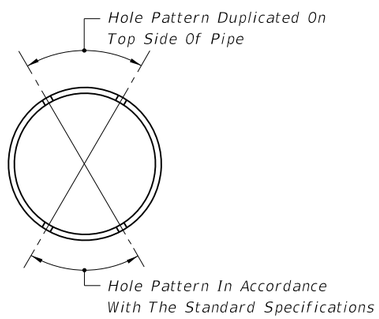

SUBDRAINAGE PIPE

GENERAL NOTES FOR CONCRETE PAVEMENT SUBDRAINAGE

1. No trench greater than 2' in depth will be allowed overnight. Trenches shall be barricaded at all times.

2. Concrete pavement subdrainage shall be constructed adjacent to the low edge of the roadway pavement and under travel lanes, auxiliary pavement and shoulders, as called for in the plans. When the low edge shifts between outside and inside edges of pavement the concrete pavement subdrainage shall extend 50' beyond and begin 50' before the flat point (100' overlap).

   Concrete pavement subdrainage shall be placed on the low side of ramps of crossroad terminals.

3. Concrete pavement subdrainage shall be constructed on a grade parallel with the edge of pavement profile, except on profiles flatter than one-tenth percent (0.10%) the concrete pavement subdrainage shall be constructed on a grade of one-tenth percent (0.10%).

4. Immediately prior to placing the filter fabric the entire vertical face of the concrete pavement shall be cleaned to remove adhering base material and soil.

5. The Contractor shall devise a procedure for holding the filter fabric in position on the vertical face of the trench. The procedure must be approved by the Engineer prior to placement of the draincrete.

6. The upper end of each separate run of the concrete pavement subdrainage pipe shall be capped.

7. Outlet pipes shall be constructed at a maximum of 500' intervals. Elbows or ⅛ bends shall be used to connect the outlet pipe to the concrete pavement subdrain pipe. The elbows or bends shall be of the same material as the outlet pipe but compatible with the pipe.

   When directed by the Engineer, outlet pipes shall be stubbed into existing inlets or into existing ditch pavements at an elevation 6" above the inlet flowline or ditch bottom. Concrete apron and bordering sod are not required for stubbed outlets,but replacement sodding will be required at trenches for pipes stubbed into paved ditches.

   In sag vertical curves separate outlet pipes for concrete pavement subdrains from opposite directions shall use a single apron unless otherwise shown in the plans or otherwise directed by the Engineer.

   Backfill around outlet pipes shall be of cohesive soils, draincrete will not be permitted.

8. Existing paved shoulder that is removed for the construction of outlet pipes shall be replaced with Type SP asphaltic concrete at the rate of 500 LB per SY.

9. The contract unit price for Edgedrain Outlet Pipe (4") LF, shall be full compensation for removal of existing shoulder pavement, trench excavation, pipe and fitting, concrete apron, hardware cloth, sod, stubbing into existing inlets and paved ditches, restoration of ditch pavement, backfill in place, and disposal of excess materials.

C:\d\projects\standards\roadway\00200-s\00287-01.dgn
rd960rh
1:55:17 PM
6/28/2012

LAST REVISION	REVISION	DESCRIPTION:				
07/01/09			FDOT DESIGN STANDARDS 2013	CONCRETE PAVEMENT SUBDRAINAGE	INDEX NO. 287	SHEET NO. 1

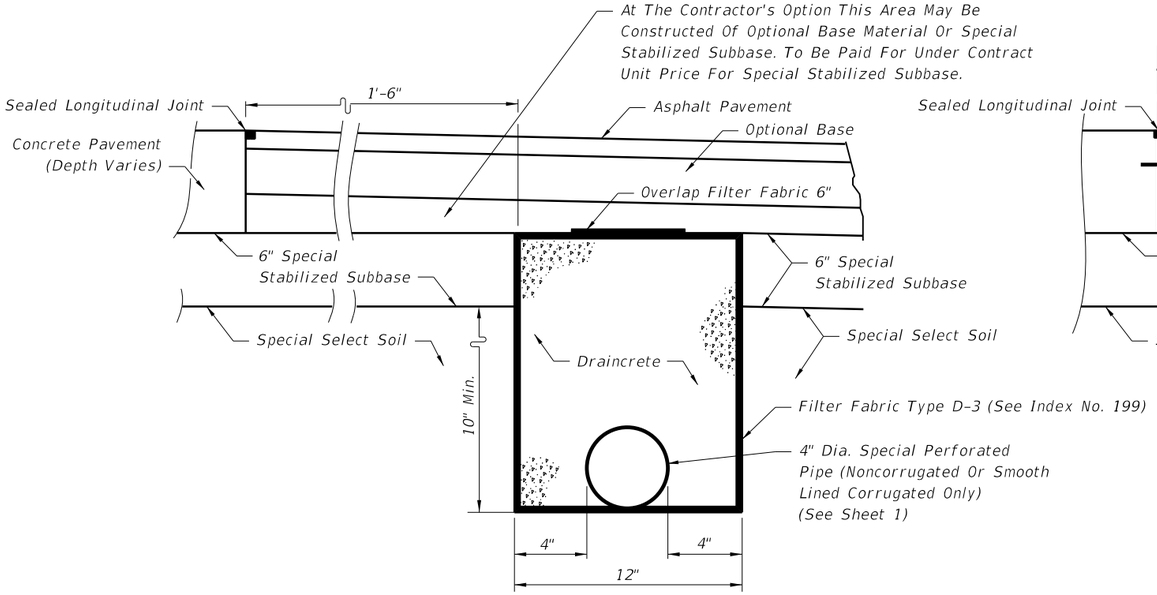

ASPHALT SHOULDERS

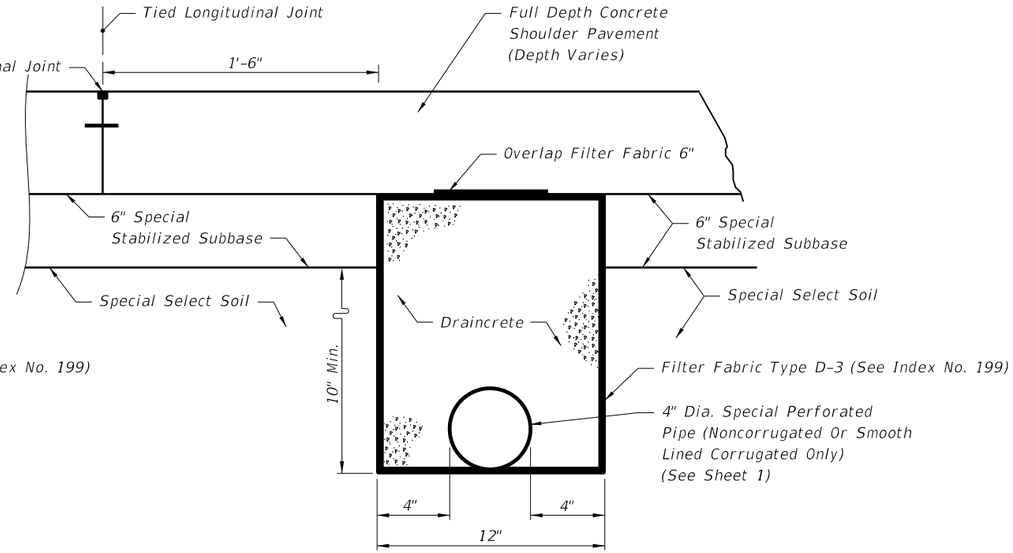

CONCRETE TRAVEL LANES, SHOULDERS, AND AUXILIARY PAVEMENT

NEW CONSTRUCTION

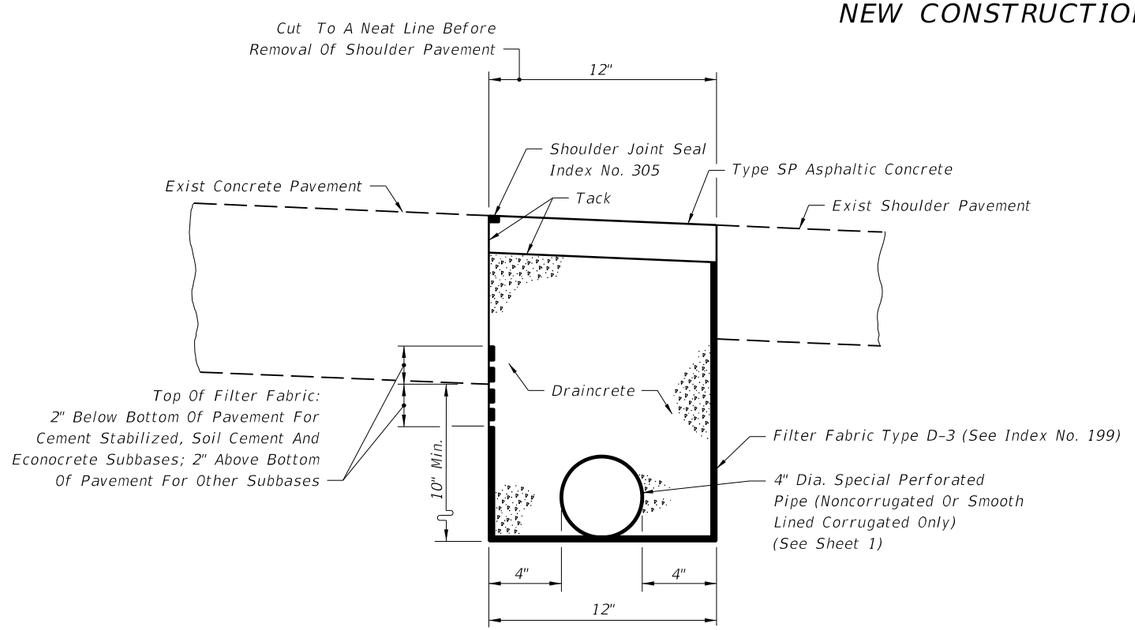

REHABILITATION

DRAINCRETE SUBDRAINAGE

NOTES FOR DRAINCRETE PAVEMENT SUBDRAINAGE

1. The edgedrain sections for DRAINCRETE SUBDRAINAGE are applicable to pavement construction identified as RIGID PAVEMENT on Index No. 505, Sheet 2 and 4.

2. The contractor shall confine the construction of draincrete edgedrain to an area in which the entire operation can be carried out in five (5) work days, unless another construction period is called for in the plans, with sufficient time allowed for the draincrete to set before placement of pavement.

METHOD OF PAYMENT

NEW CONSTRUCTION:

1. The contract unit price for Edgedrain (Draincrete) LF shall be full compensation for trench excavation, disposal of excess material, filter fabric, draincrete edgedrain pipe and fittings and draincrete.

   Payment for outlet pipe shall be in accordance with General Note 9, Sheet 1 of 4.

FOR REHABILITATION:

1. The contract unit price for Edgedrain (Draincrete) LF, shall be full compensation for removal of existing shoulder pavement, trench excavation, disposal of excess materials, filter fabric, draincrete edgedrain pipe and fittings, and draincrete, necessary for edgedrain construction.

   Payment for outlet pipe shall be in accordance with General Note 9, Sheet 1 of 4.

   Shoulder pavement shall be paid for under the contract unit price for Type SP, Asphaltic Concrete.

   Shoulder joint seal shall be paid for under the contract unit price for Pavement Joint, LF.

6/28/2012 1:55:19 PM rd960rh C:\d\projects\standards\roadway\00200-s\00287-02.dgn

LAST REVISION	REVISION	DESCRIPTION:				
07/01/09			FDOT DESIGN STANDARDS 2013	CONCRETE PAVEMENT SUBDRAINAGE	INDEX NO. 287	SHEET NO. 2

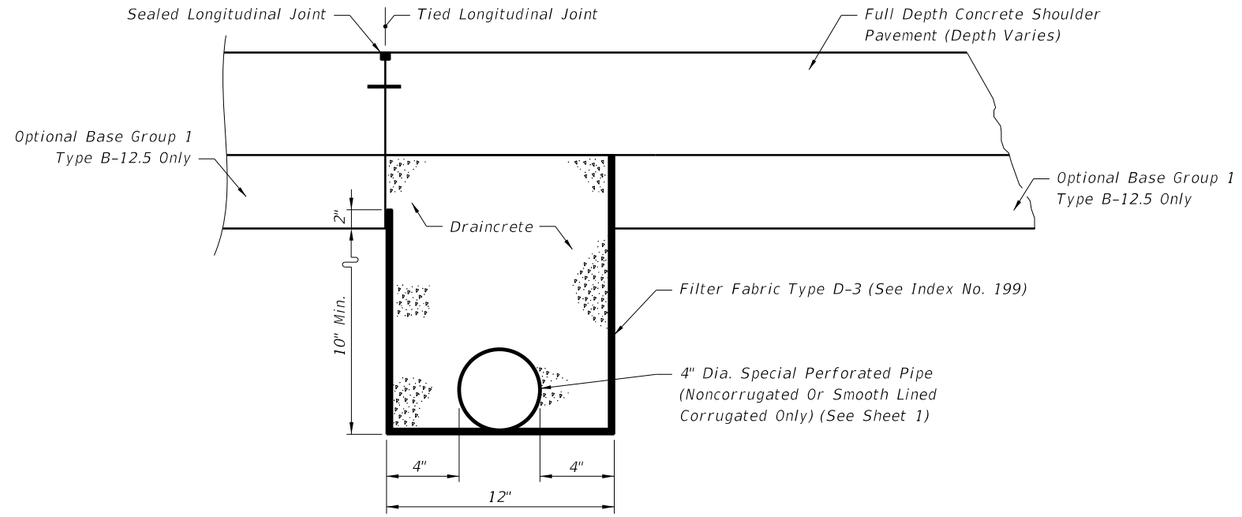

CONCRETE TRAVEL LANES, SHOULDERS, AND AUXILIARY PAVEMENT

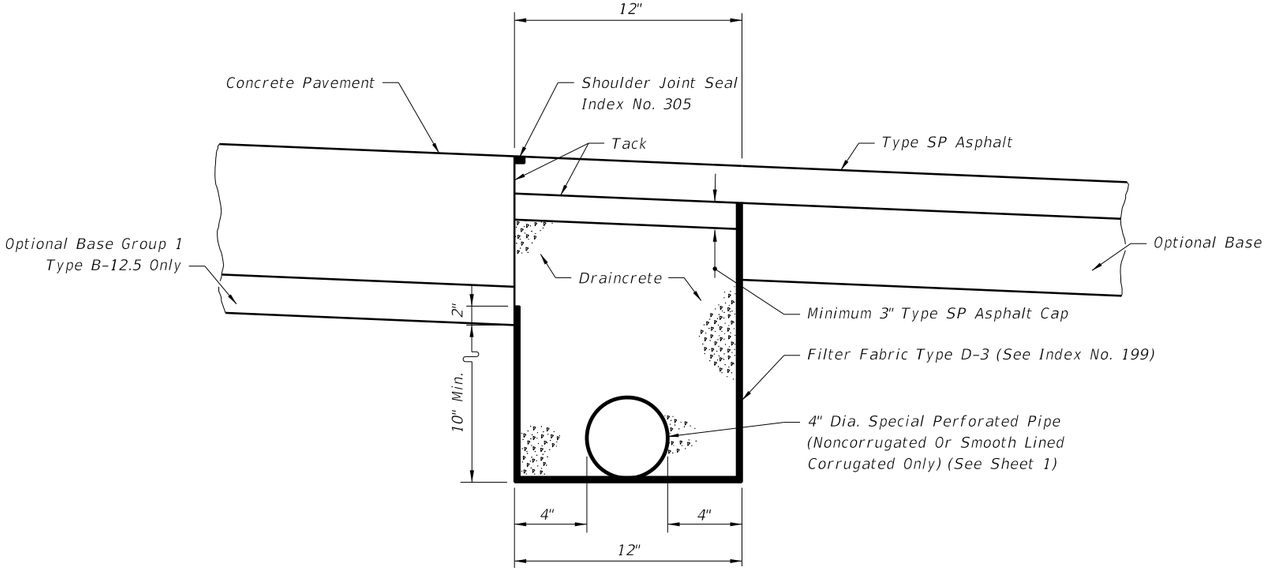

ASPHALT SHOULDERS

ASPHALT BASE SUBDRAINAGE

NOTES FOR DRAINCRETE PAVEMENT SUBDRAINAGE

1. The edgedrain sections for DRAINCRETE SUBDRAINAGE are applicable to pavement construction identified as RIGID PAVEMENT on Index No. 505, Sheet 2 and 3.

2. The contractor shall confine the construction of draincrete edgedrain to an area in which the entire operation can be carried out in five (5) work days, unless another construction period is called for in the plans, with sufficient time allowed for the draincrete to set before placement of pavement.

METHOD OF PAYMENT

NEW CONSTRUCTION:

1. The contract unit price for Edgedrain (Draincrete) LF shall be full compensation for trench excavation, disposal of excess material, filter fabric, draincrete edgedrain pipe and fittings and draincrete.

   Payment for outlet pipe shall be in accordance with General Note 9, Sheet 1 of 4.

2. Type B-12.5 shall be paid for under the contract unit price for Optional Base.

3. Shoulder pavement shall be paid for under the contract unit price for Type SP, Asphaltic Concrete.

C:\d\projects\standards\roadway\00200-s\00287-03.dgn
rd960rh
1:55:21 PM
6/28/2012

LAST REVISION	REVISION	DESCRIPTION:		FDOT DESIGN STANDARDS 2013	CONCRETE PAVEMENT SUBDRAINAGE	INDEX NO.	SHEET NO.
07/01/09						287	3

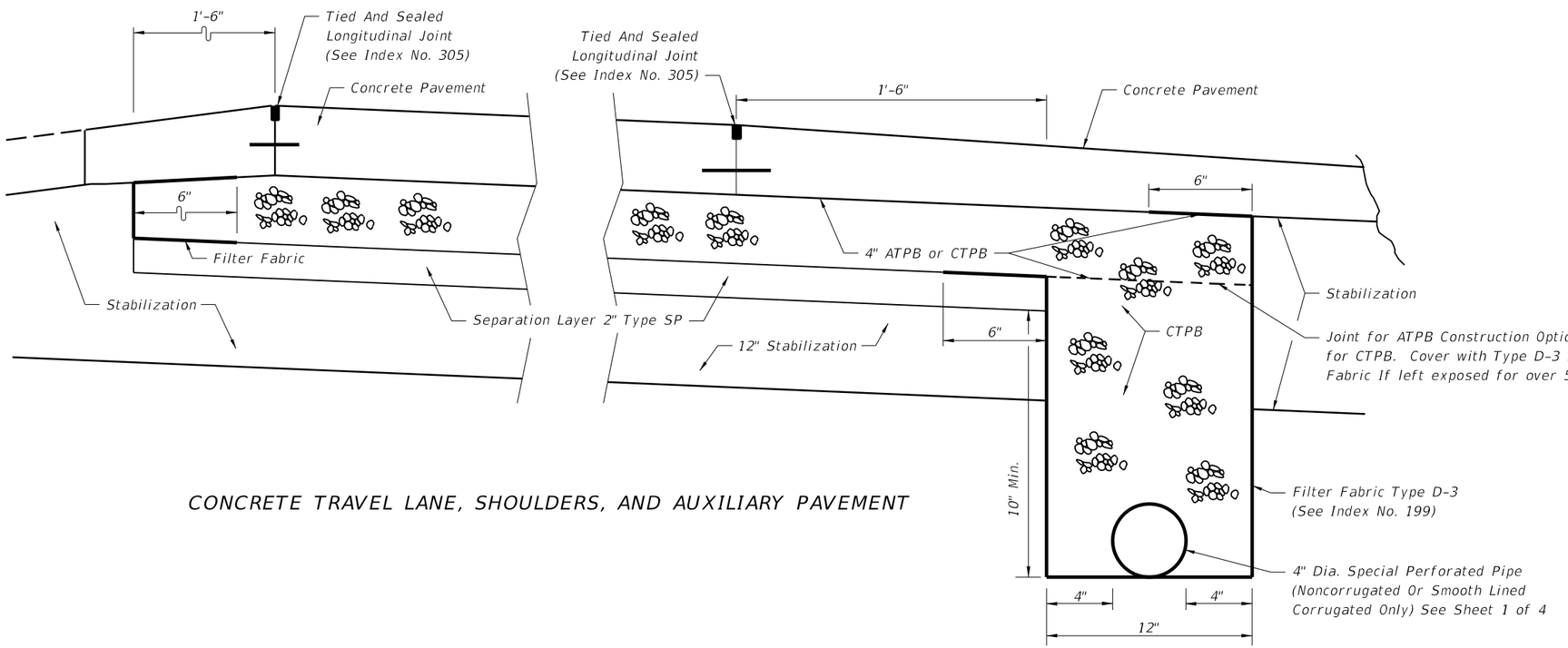

CONCRETE TRAVEL LANE, SHOULDERS, AND AUXILIARY PAVEMENT

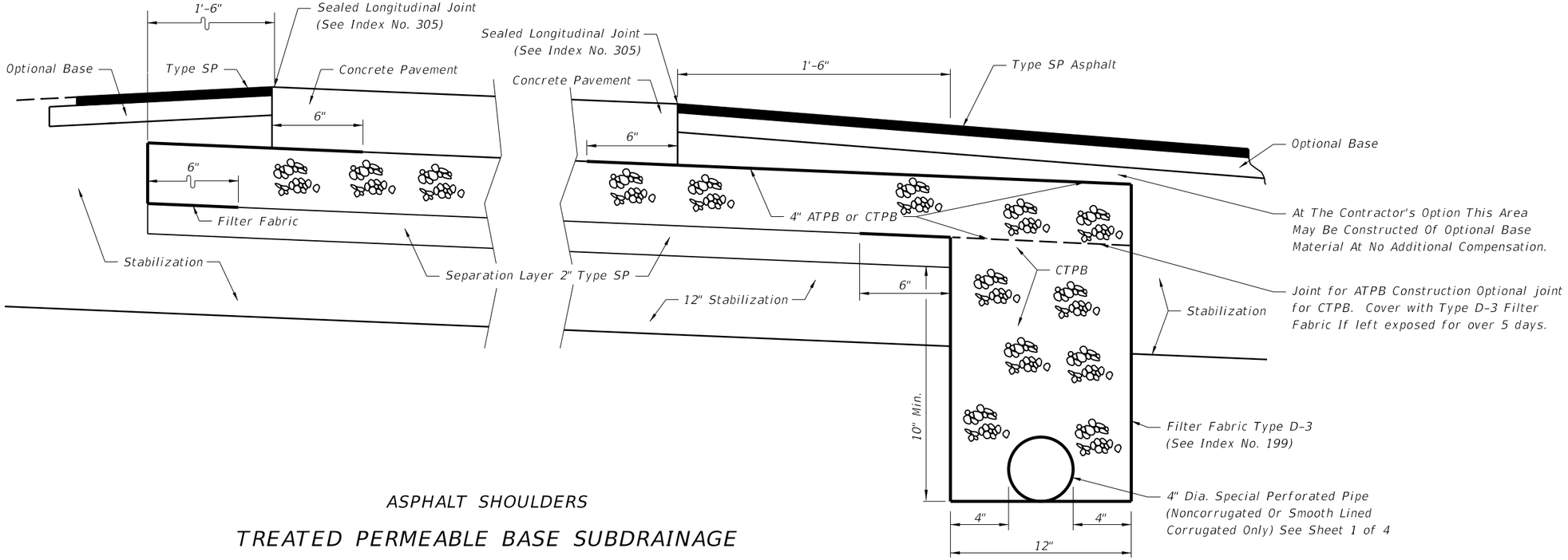

ASPHALT SHOULDERS

TREATED PERMEABLE BASE SUBDRAINAGE

GENERAL NOTES FOR TREATED PERMEABLE BASE EDGEDRAIN

NEW CONSTRUCTION

1. The contractor shall confine the construction of edgedrain to an area in which the entire operation can be carried out in (5) work days, unless another construction period is called for the plans.

METHOD OF PAYMENT

NEW CONSTRUCTION

1. Payment shall be full compensation for trench excavation, disposal of excess materials, filter fabric, pipe and fittings, necessary for concrete pavement subdrainage construction. Payment shall be included in the cost for Asphalt Treated Permeable Base, CY or Cement Treated Permeable Base, CY.

   Payment for outlet pipe shall be in accordance with General Note 9, Sheet 1 of 4.

2. Shoulder pavement and separation layer shall be paid for under the contract unit price for Type SP, Asphaltic Concrete.

C:\d\projects\standards\roadway\00200-s\00287-04.dgn
rd960rh
1:55:23 PM
6/28/2012

LAST REVISION	REVISION	DESCRIPTION:		FDOT DESIGN STANDARDS 2013	CONCRETE PAVEMENT SUBDRAINAGE	INDEX NO.	SHEET NO.
01/01/08						287	4

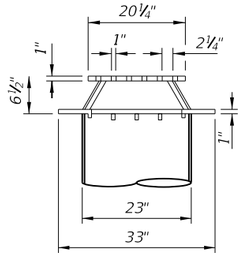

STEEL WELL GRATE DETAIL
NEENAH GRATE CATALOG NO. R-4341-A
OR EQUIVALENT

Note: Steel well grate to be installed over 24" deep well. Steel grate to be hot dipped galvanized after fabrication. Cost to be included in the price of casing.

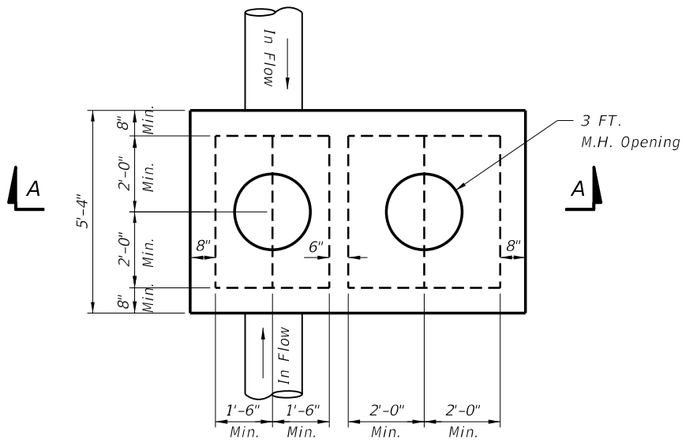

TOP SLAB PLAN

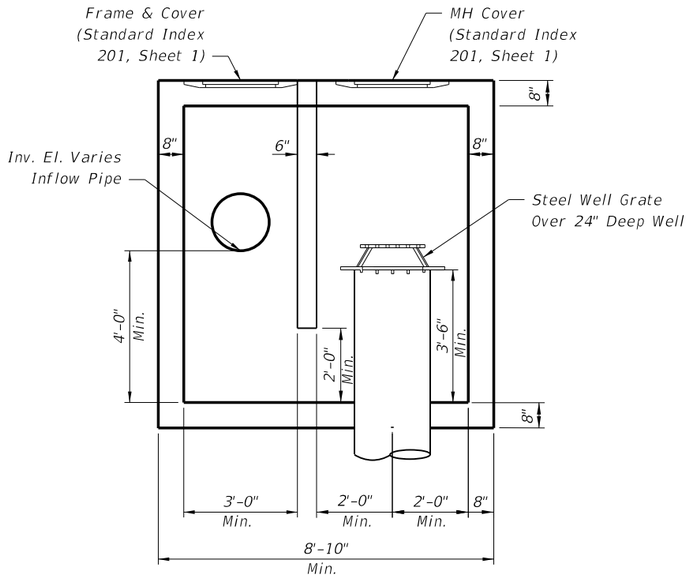

SECTION A-A

STRUCTURE WITH NO OUTFLOW

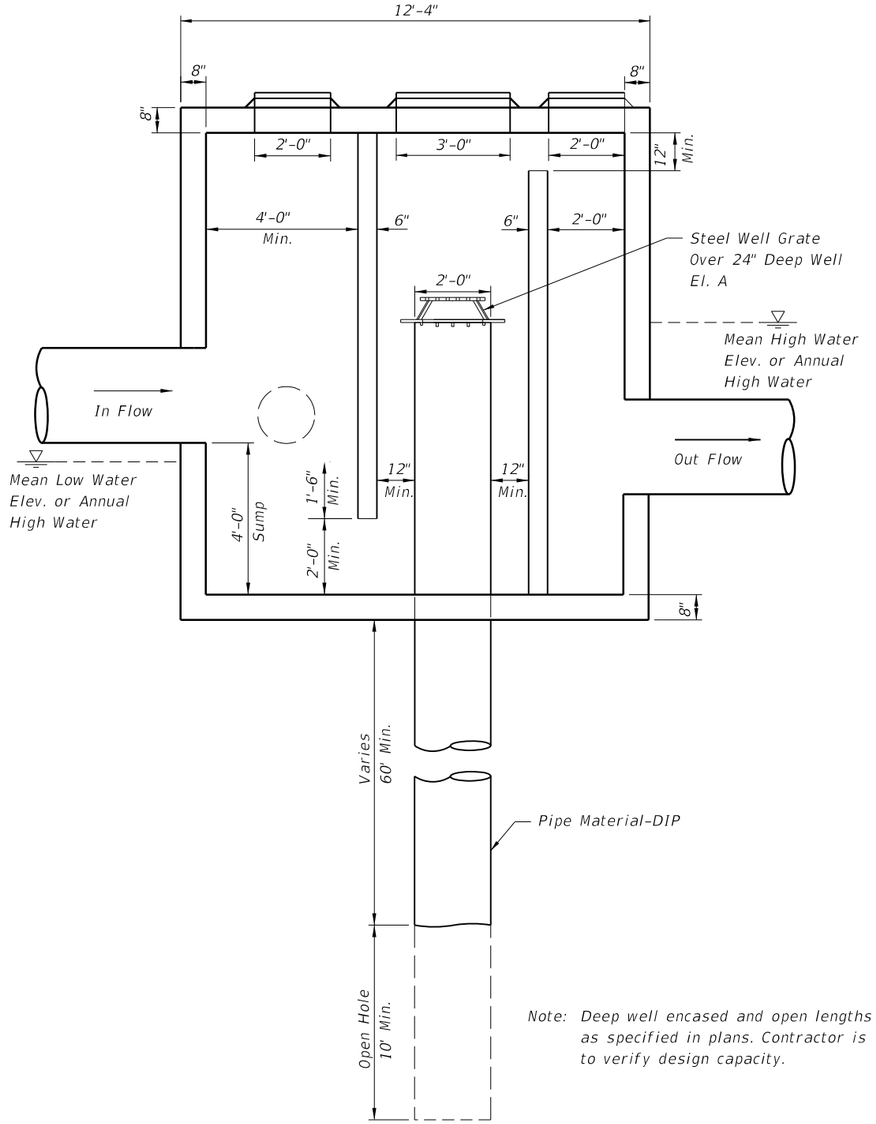

Note: Deep well encased and open lengths as specified in plans. Contractor is to verify design capacity.

SPECIAL MANHOLE STRUCTURE
DETAIL WITH OUTFALL

Design Notes

1. Depth of Casing Varies, 60' min.

2. Depth of Open Hole, 10'-20'.

3. Actual Size Of The Inflow And Outflow Chambers Will Be Determined By The Size Of The Pipes (Refer To Table 3 Of Index 200.) The Width Of The Box Shall Be Constant Based On The Largest Pipe. The Length Is To Be Adjusted Based On Size and Orientation Of The Pipes.

C:\d\projects\standards\roadway\00200-s\00288-01.dgn
rd960rh
1:55:25 PM
6/28/2012

LAST REVISION	REVISION	DESCRIPTION:				
01/01/09			FDOT DESIGN STANDARDS 2013	DEEP WELL INJECTION BOX	INDEX NO. 288	SHEET NO. 1

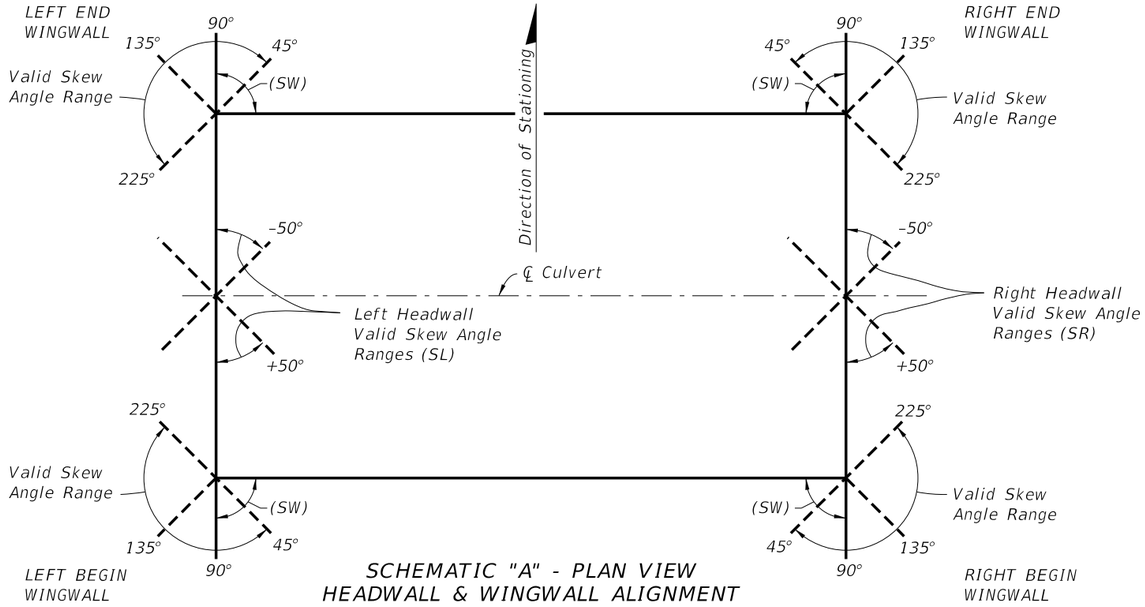

SCHEMATIC "A" - PLAN VIEW
HEADWALL & WINGWALL ALIGNMENT

NOTE: All headwall and culvert skew angles are measured in degrees from a line perpendicular to the centerline of culvert (counter-clockwise positive), see Schematic "B".

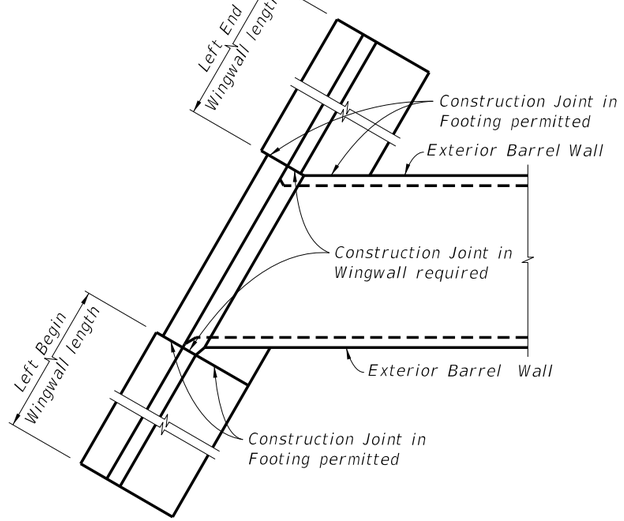

PART PLAN SHOWING PARALLEL WINGWALLS
AND LOCATION OF CONSTRUCTION JOINTS

NOTE:
Construction Joints in wingwalls and footings are located as follows: For non-skewed wingwalls they are located adjacent to the exterior face of the exterior barrel wall; when the ℄ of wingwall and ℄ of exterior barrel wall results in an acute angle see Left End Wingwall above, and when the angle is obtuse see Left Begin Wingwall above and Detail C (Sheet 5).

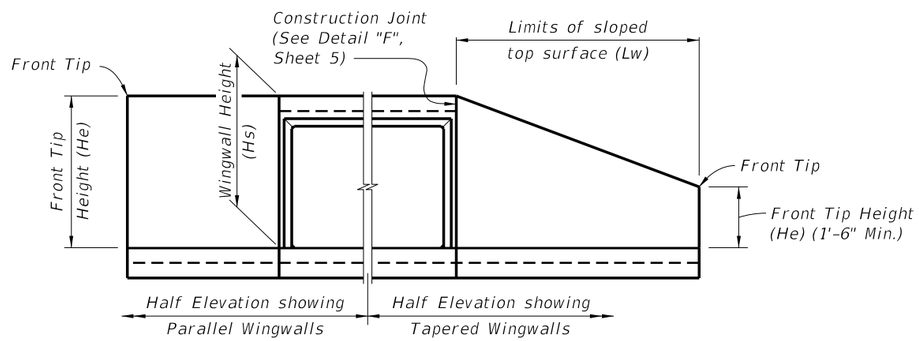

END ELEVATION
OF CULVERT

GENERAL NOTES:

LIVE LOAD: HL-93.

CONSTRUCTION LOADING: It is the construction Contractor's responsibility to provide for supporting construction loads that exceed AASHTO HL-93, and any construction load applied prior to 2 feet of compacted fill placed above the top slab.

SURFACE FINISH: All concrete surfaces shall receive a general surface finish.

SKEWED CONSTRUCTION JOINTS: Construction joints in barrels of culverts with skewed wingwalls may be placed parallel to the headwalls and the reinforcing steel, and the slabs may be cut provided that the cut reinforcing steel extends beyond the construction joint enough for splices to be made in accordance with Table 1 on this sheet. The cost of construction joints and additional reinforcing shall be at the expense of the Contractor.

CULVERT EXTENSIONS: For cut backs and ties into existing concrete box culverts see Sheet 6 of 7.

REINFORCING STEEL: See the "Box Culvert Data Tables" in the Contract Plans for grade and bar spacing. See the Reinforcing Bar List in the Contract Plans for bar sizes and bar bending details.

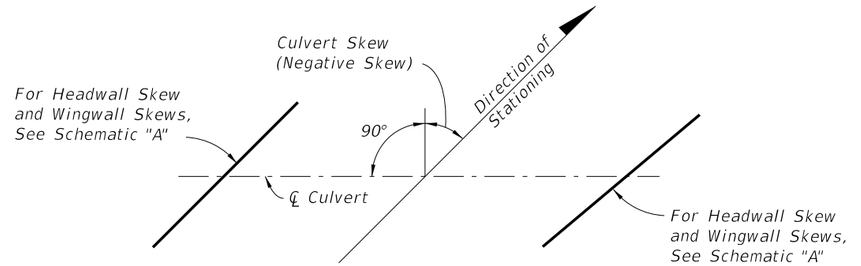

SCHEMATIC "B" - PLAN VIEW
CULVERT ALIGNMENT

NOTE: For Culvert Skew see Contract Plans.

TABLE 1 - MINIMUM BAR SPLICE LENGTHS FOR LONGITUDINAL REINFORCING

BAR SIZE	SPLICE (CLASS B)		BAR SIZE	SPLICE (CLASS B)	
	CLASS II (3400 psi)	CLASS IV (5500 psi)		CLASS II (3400 psi)	CLASS IV (5500 psi)
#3	1'-0"	1'-0"	#8	3'-6"	2'-9"
#4	1'-4"	1'-4"	#9	4'-5"	3'-6"
#5	1'-8"	1'-8"	#10	6'-7"	4'-5"
#6	1'-11"	1'-11"	#11	7'-10"	6'-5"
#7	2'-8"	2'-3"			

TABLE 1 NOTE: Splice lengths are based on an AASHTO Class B tension lap splice for the Specification Section 346 concrete class shown.

C:\d\projects\standards\structures\2013book\00289-1of8.dgn
rd960rh
1:55:27 PM
6/28/2012

LAST REVISION	REVISION	DESCRIPTION:				
01/01/11			FDOT DESIGN STANDARDS 2013	CONCRETE BOX CULVERT DETAILS (LRFD)	INDEX NO. 289	SHEET NO. 1

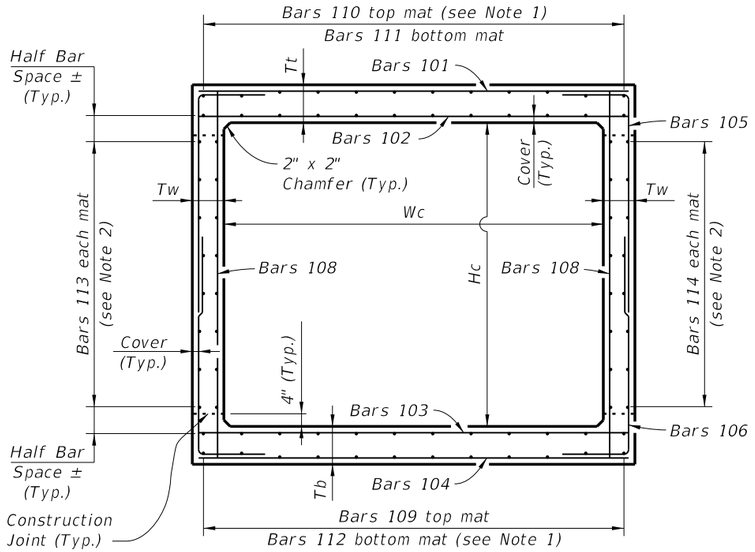

TYPICAL SECTION THRU SINGLE BARREL CULVERT

CULVERT BARREL NOTES:

1. *Space Bars 110 and 112 with a bar in each corner, and at the ℄ of interior walls (for multiple barrel culverts only), and the remaining bars placed at equal spacing shown in the Contract Plans. Adjust last bar spacing when required.*
2. *Place Bars 113 and 114 at spacing shown in the Contract Plans evenly between Bars 109 and 111.*
3. *Locate the first transverse bar from the ends of the culvert at one half the bar spacing, but provide the minimum reinforcement cover and not greater than 4" clear.*

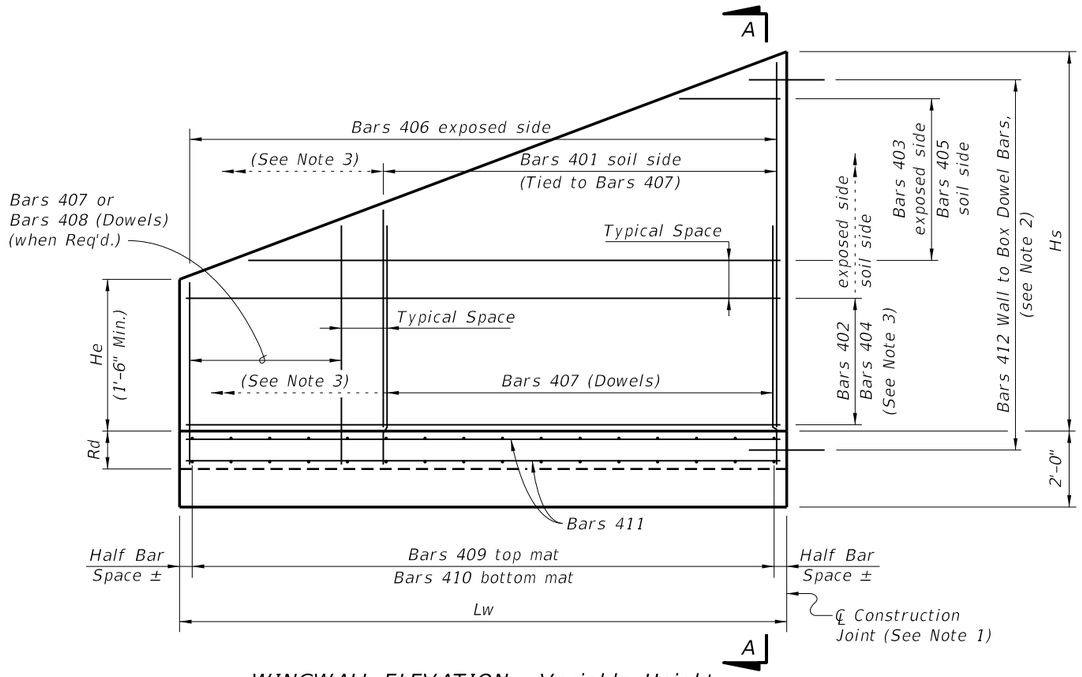

WINGWALL ELEVATION - Variable Height
(Left End shown - other corners similar)

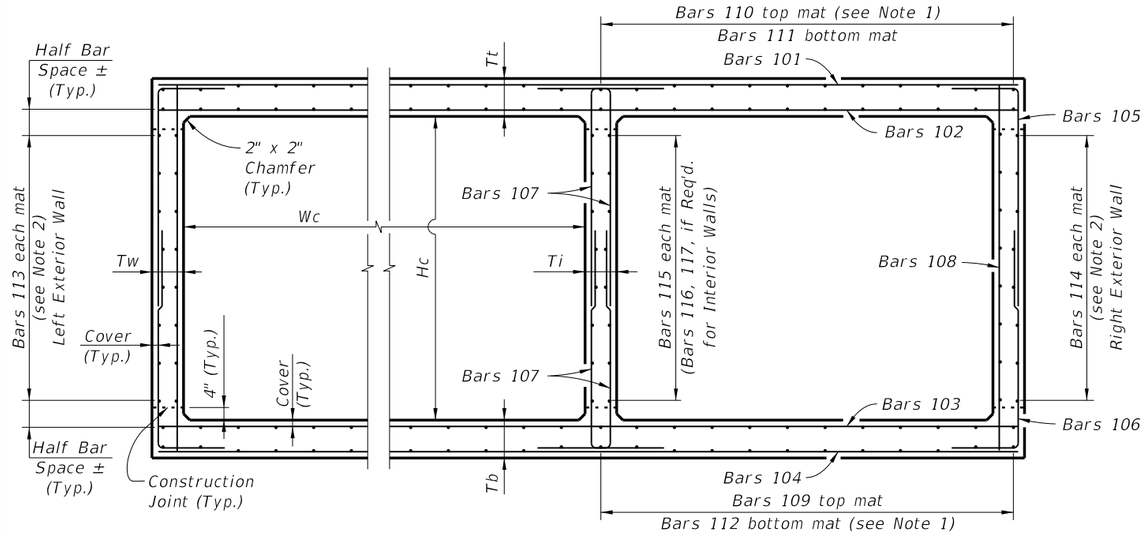

TYPICAL SECTION THRU MULTIPLE BARREL CULVERT

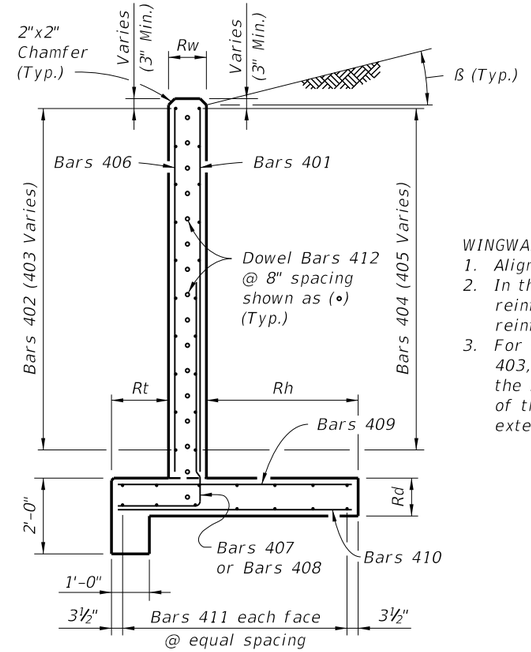

WINGWALL SECTION A-A

WINGWALL NOTES:

1. *Align construction joint perpendicular to wingwall.*
2. *In the vicinity of the construction joint, field bend reinforcement as necessary to maintain minimum reinforcement cover.*
3. *For constant height wingwalls, variable length Bars 403, 405 & 408 are not required, and as such the limits of Bars 401 & 407 extend the full length of the wingwall, and the limits of Bars 402 & 404 extend to the full height of the wingwall.*

C:\d\projects\standards\structures\2013book\00289-2of8.dgn
rd960rh
1:55:29 PM
6/28/2012

LAST REVISION	REVISION	DESCRIPTION:				
01/01/07			FDOT DESIGN STANDARDS 2013	CONCRETE BOX CULVERT DETAILS (LRFD)	INDEX NO. 289	SHEET NO. 2

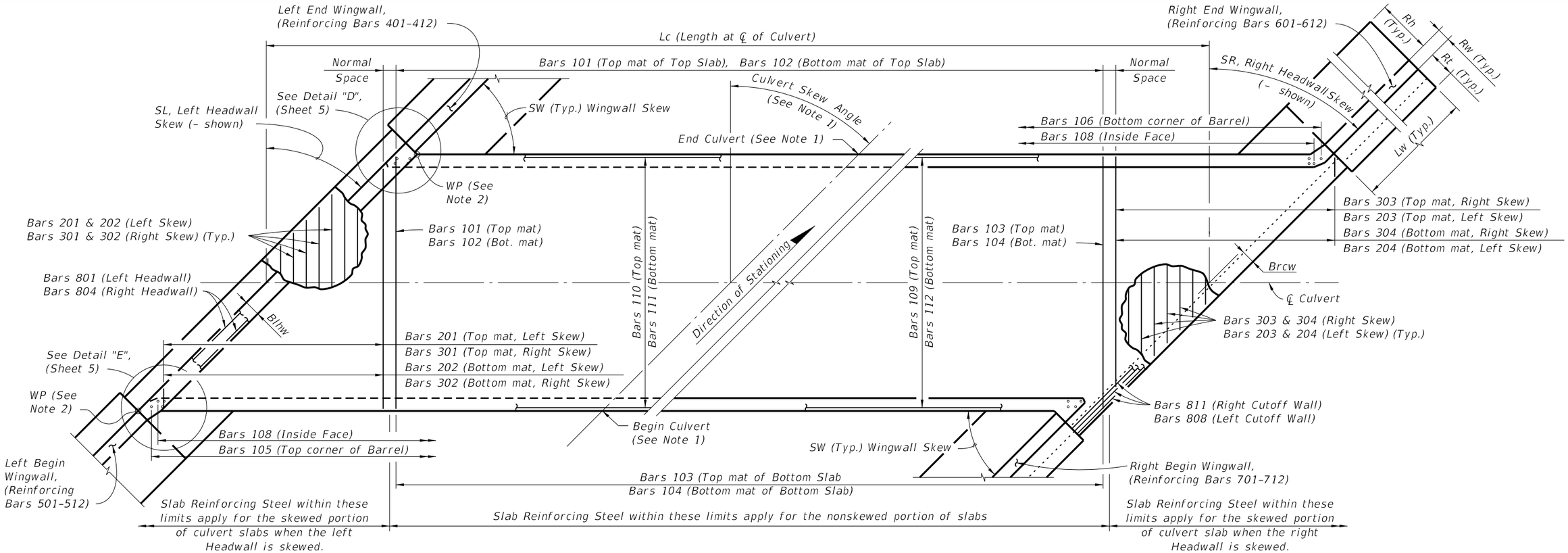

PARTIAL PLAN TOP SLAB
(Left Side, Left Skew)

PARTIAL PLAN BOTTOM SLAB
(Right Side, Right Skew)

NOTES:
1. See Contract Plans for Culvert location, Culvert Skew Angle and Roadway Cross Section.
2. WP = Working Point, used for wingwall layout and location of construction joint. See Detail "C" (Sheet 5).

SINGLE BARREL BOX CULVERT
(Skewed Culvert With Parallel Wingwalls Shown)

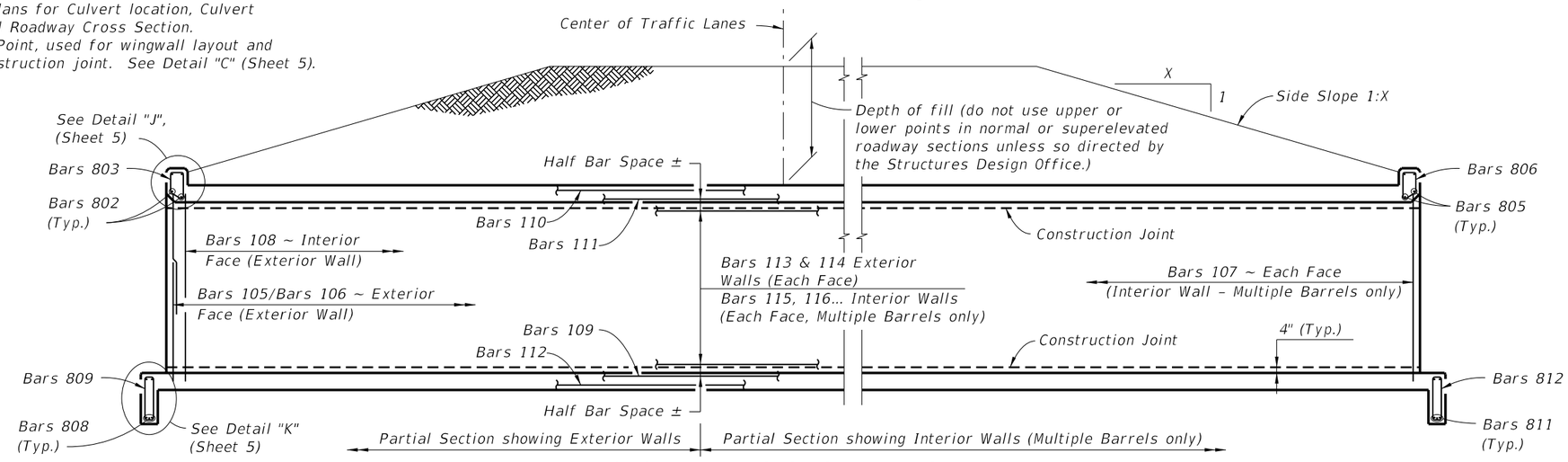

LONGITUDINAL SECTION THRU CULVERT
(Transverse Top & Bottom Slab Reinforcing Not Shown For Clarity)

C:\d\projects\standards\structures\2013book\00289-3of8.dgn
rd960rh
1:55:32 PM
6/28/2012

LAST REVISION	REVISION	DESCRIPTION:				
01/01/07			FDOT DESIGN STANDARDS 2013	CONCRETE BOX CULVERT DETAILS (LRFD)	INDEX NO. 289	SHEET NO. 3

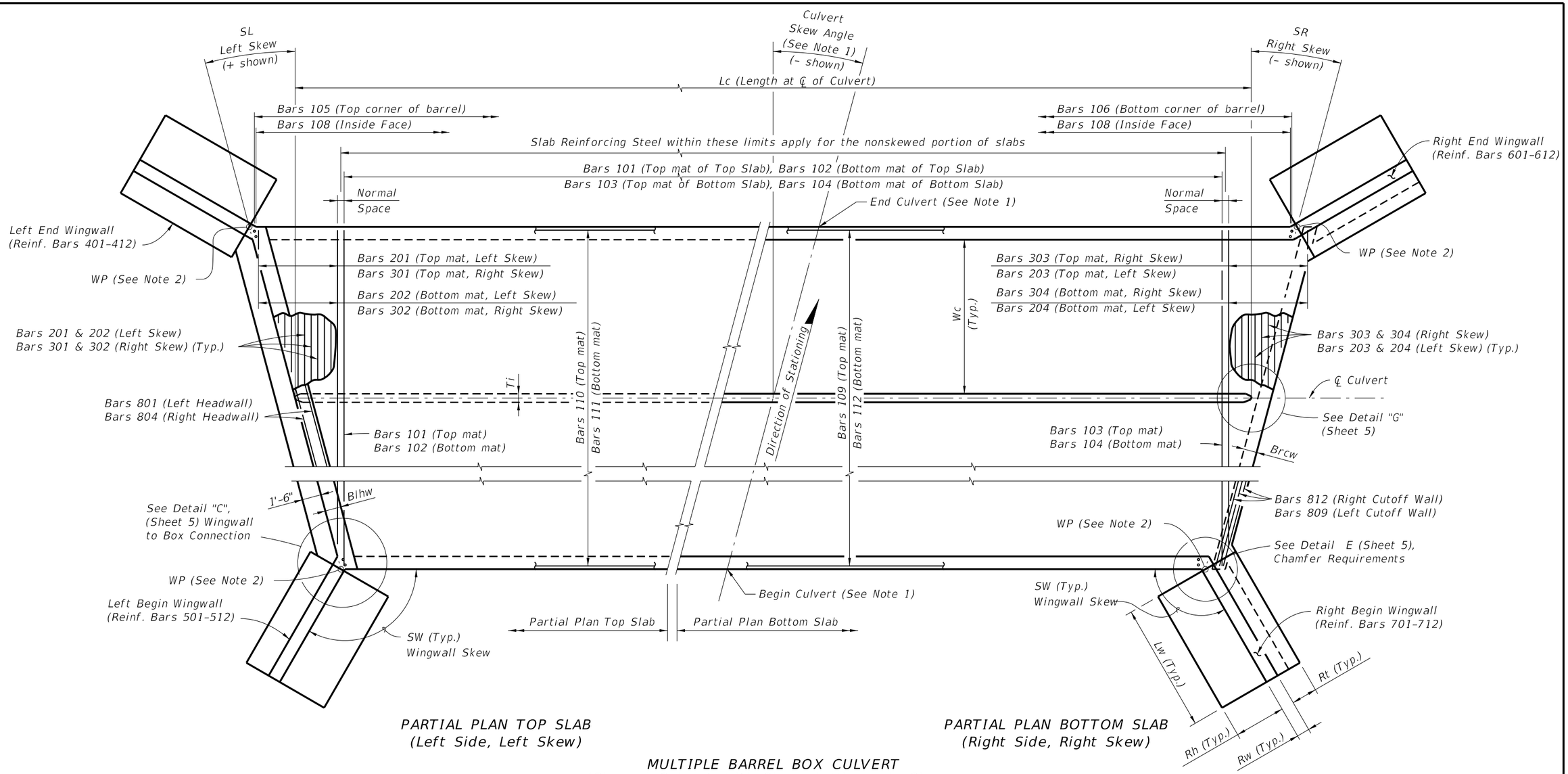

PARTIAL PLAN TOP SLAB
(Left Side, Left Skew)

PARTIAL PLAN BOTTOM SLAB
(Right Side, Right Skew)

MULTIPLE BARREL BOX CULVERT
(Skewed Culvert With Skewed Wingwalls Shown)

NOTES:
1. *See Contract Plans for Culvert Location, Culvert Skew Angle and Roadway Cross Section.*
2. *WP = Working Point, used for wingwall layout and location of construction joint. See Detail C (Sheet 5).*

C:\d\projects\standards\structures\2013book\00289-4of8.dgn
rd960rh
1:55:34 PM
6/28/2012

LAST REVISION	REVISION	DESCRIPTION:				
01/01/07			FDOT DESIGN STANDARDS 2013	CONCRETE BOX CULVERT DETAILS (LRFD)	INDEX NO. 289	SHEET NO. 4

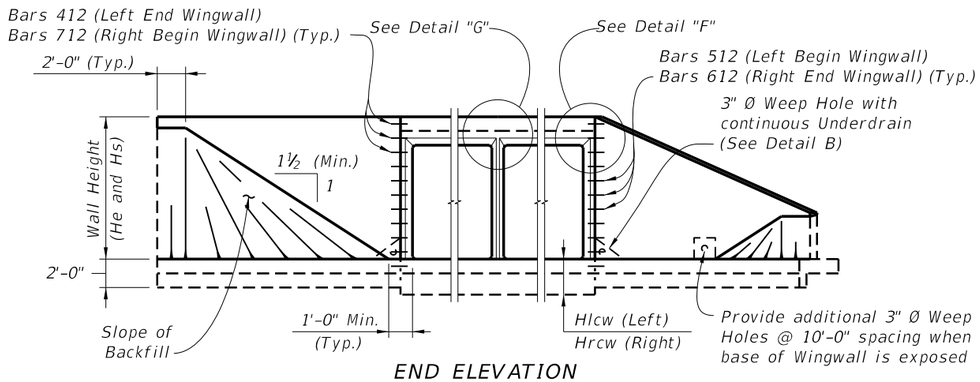

END ELEVATION
(Showing Constant Height And Variable Height Wingwalls)

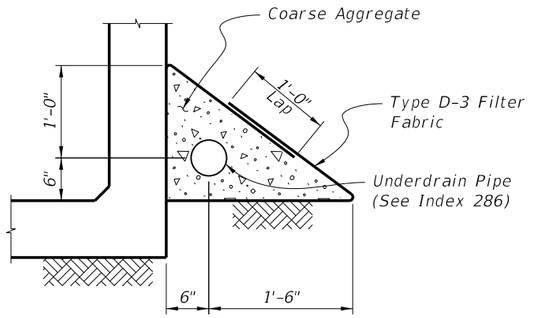

DETAIL "B"
UNDERDRAIN DETAIL
(Similar to Type II ~ Index 286)

NOTES:

1. *For small angles, the Contractor may elect to fill the area between the box and the wingwall footing with unreinforced concrete. For wingwall skew angles less then 90 degrees, field bend wingwall reinforcement as necessary while maintaining cover. No additional payment will be made for this work.*
2. *Location of Construction Joint determined by WP at theoretical intersection of:*
   – Soil side face of Headwall and outside face of Box Exterior Wall, for SW≤90°;
   – Outside face of Wingwall and outside face of Box Exterior Wall, for SW>90°.
3. *Provide 6" chamfer when angle 'A' is greater than 45°. Maintain minimum wall thickness. Field adjust reinforcing to maintain cover.*
4. *Wingwall Skew Angles (SW) are measured from the adjacent box exterior wall to the wingwall.*
5. *Turn or extend Wingwall Cutoff Wall as necessary to meet Box Cutoff Wall.*
6. *Provide additional reinforcement in the top of the top slab below traffic railings to ensure a minimum area of 0.80 sq. in./ft. transverse reinforcing.*

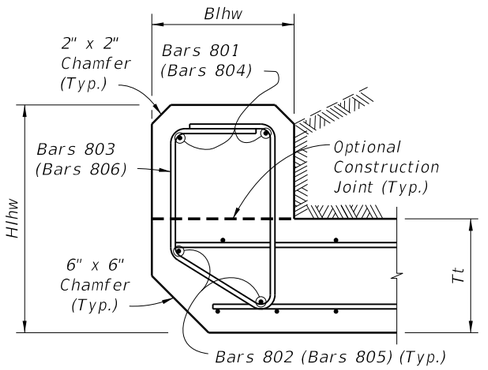

DETAIL "J"
LEFT HEADWALL SECTION
(Right Headwall similar)

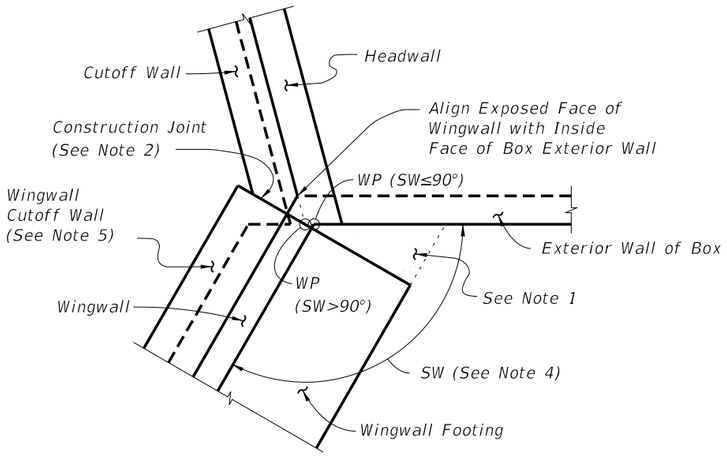

DETAIL "C" - PLAN VIEW
WINGWALL TO BOX CONNECTION
(Left Begin Corner Shown, Other Corners Similar)

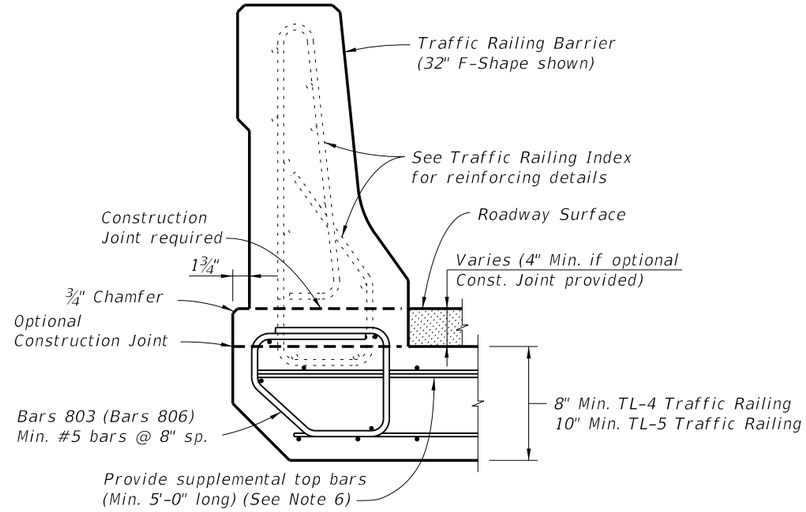

DETAIL "I"
TRAFFIC RAILING ATTACHMENT TO HEADWALL

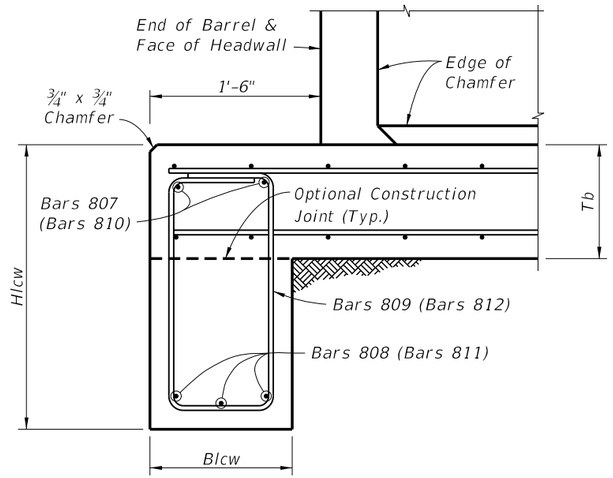

DETAIL "K"
LEFT CUTOFF WALL SECTION
(Right Cutoff Wall similar)

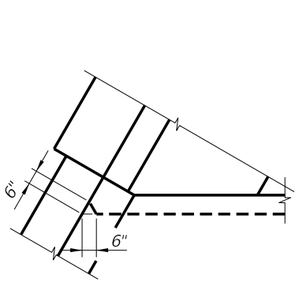

DETAIL "D"

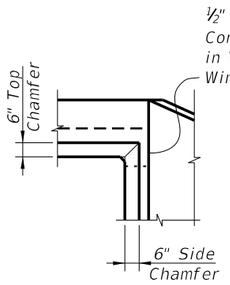

DETAIL "F"

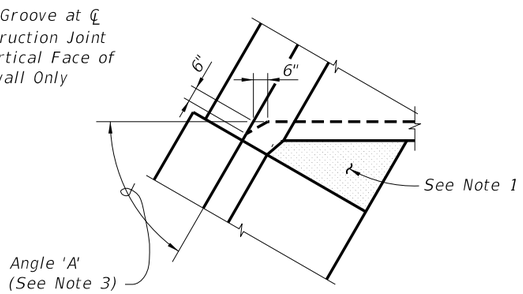

DETAIL "E"

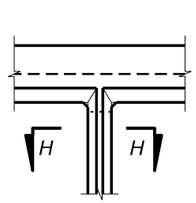

DETAIL "G"

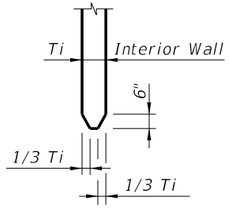

SECTION H-H

CROSS REFERENCE:
See Sheet 3 for locations of Details "D", "E", "J" & "K".
See Sheet 4 for locations of Detail "C".

LAST REVISION	REVISION	DESCRIPTION:				
01/01/10			FDOT DESIGN STANDARDS 2013	CONCRETE BOX CULVERT DETAILS (LRFD)	INDEX NO. 289	SHEET NO. 5

6/28/2012 1:55:36 PM rd960rh C:\d\projects\standards\structures\2013book\00289-5of8.dgn

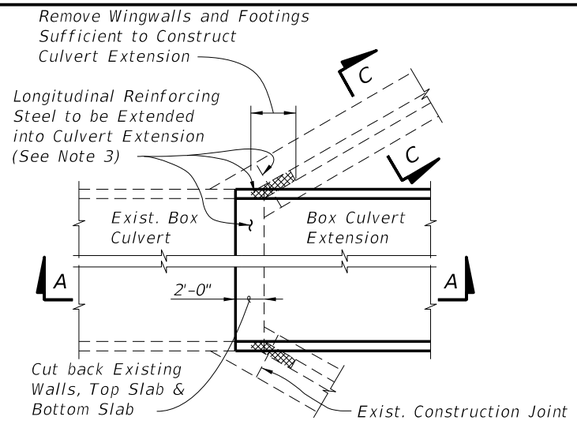

OUTSIDE WALLS OF BOXES

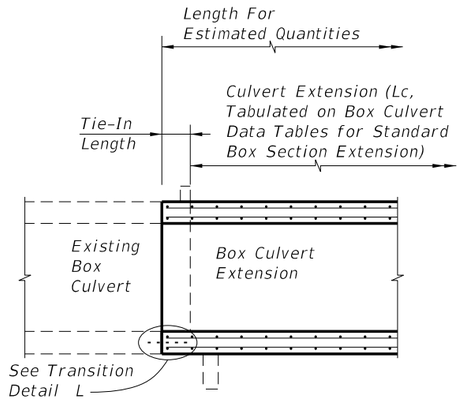

SECTION A-A

FLARED WINGWALL

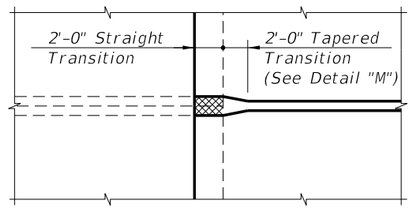

INTERIOR DOUBLE WALLS OF BOXES

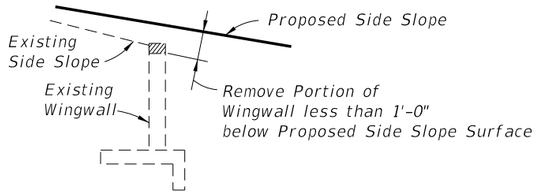

SECTION C-C

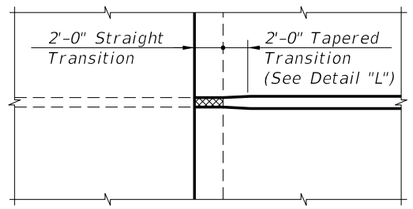

INTERIOR SINGLE WALLS OF BOXES

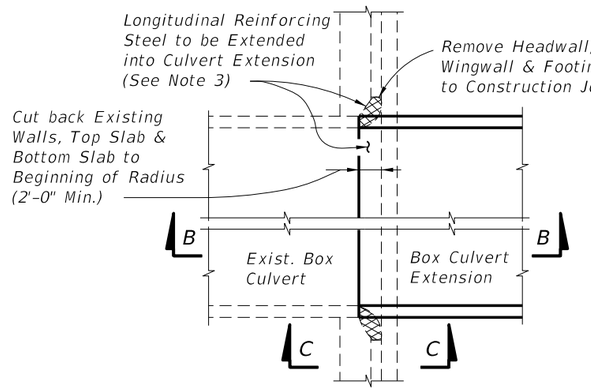

OUTSIDE WALLS OF BOXES

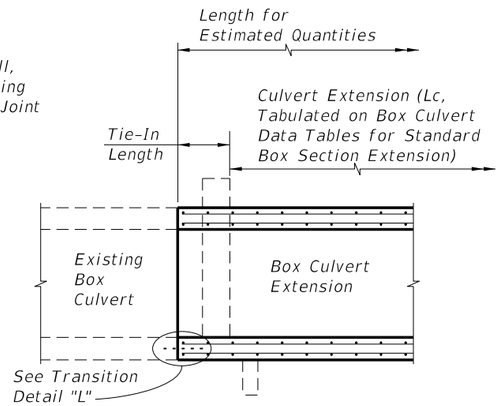

SECTION B-B

STRAIGHT WINGWALL

NOTES:

1. The Box Culvert Data Tables and Reinforcing Bar List do not include the additional quantities needed for dowel connections or transitions from double walls of existing concrete box culverts; the cost for additional reinforcement and the thickened concrete wall in the transitional area shall be included in the costs for concrete and steel in the culvert extension.
2. Cost for removal and disposal of material from existing headwalls, wingwalls and box, and cost of cleaning, straightening and extending or doweling longitudinal reinforcing steel shall be included in the cost for concrete and steel of the culvert extension.
3. Remove existing concrete while avoiding damage to existing reinforcement. Clean and straighten existing reinforcement, lap and tie onto extension reinforcement.
4. Dowel in #4 Bars @ 1'-0" max. spacing into wall/slab when there is a single mat of existing reinforcing steel, otherwise splice 1'-6" as shown for inside reinforcement. Use an Adhesive Bonding Material System in accordance with Specifications Section 416 & 937.
5. Provide additional transverse bars for top and bottom slab, parallel and full width of any skewed joint connection when shown in the Plans.
6. See Box Culvert Data Table notes in Plans for Connection Types allowed.

PLAN VIEWS

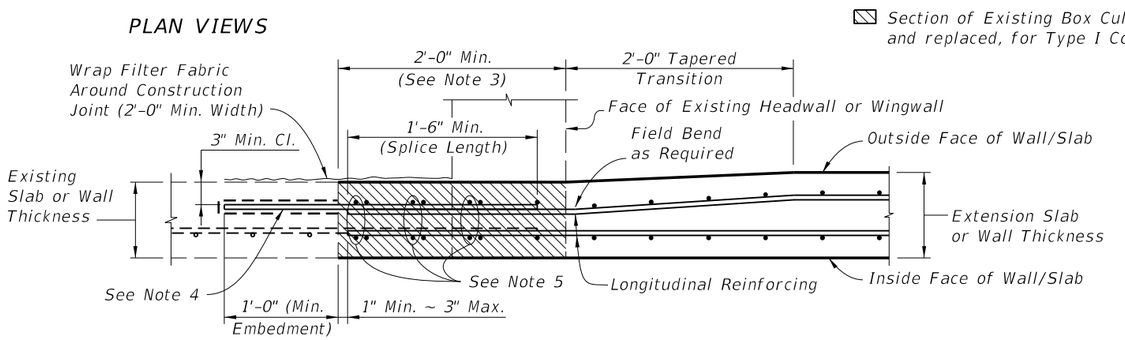

DETAIL "L" - TRANSITION FOR EXTERIOR WALL/SLAB EXTENSION
(Interior Single Walls Similar)

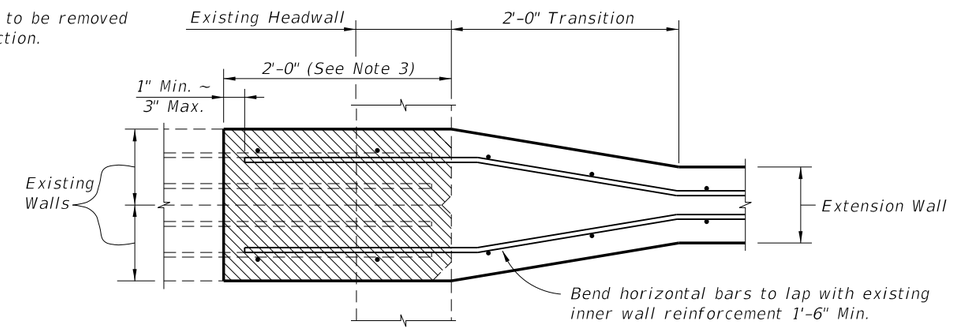

DETAIL "M" - TRANSITION FOR INTERIOR DOUBLE WALLS OF BOX CULVERTS

TYPE I CONNECTION DETAILS FOR CONCRETE BOX CULVERT EXTENSIONS (CUT BACK EXISTING CONCRETE)

LAST REVISION	REVISION	DESCRIPTION:				
01/01/12			FDOT DESIGN STANDARDS 2013	CONCRETE BOX CULVERT DETAILS (LRFD)	INDEX NO. 289	SHEET NO. 6

C:\d\projects\standards\structures\2013book\00289-6of8.dgn rd960rh 1:55:38 PM 6/28/2012

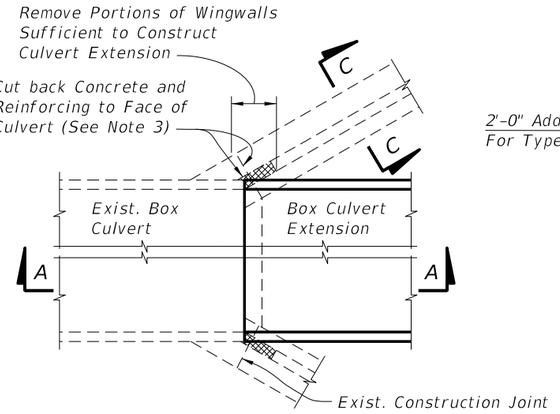

OUTSIDE WALLS OF BOXES

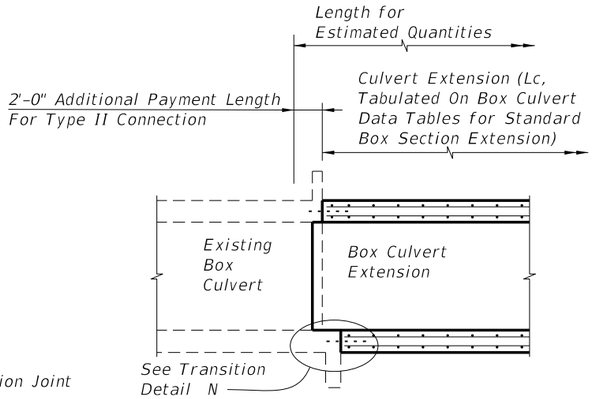

SECTION A-A

FLARED WINGWALL

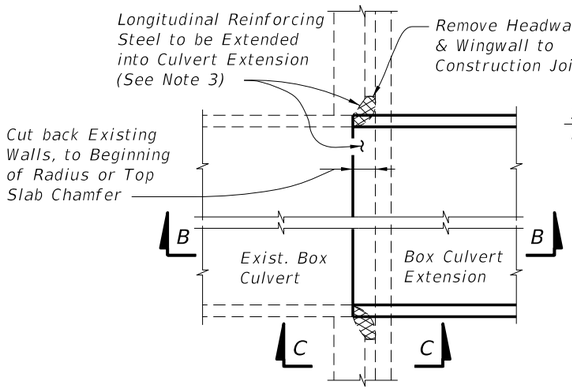

OUTSIDE WALLS OF BOXES

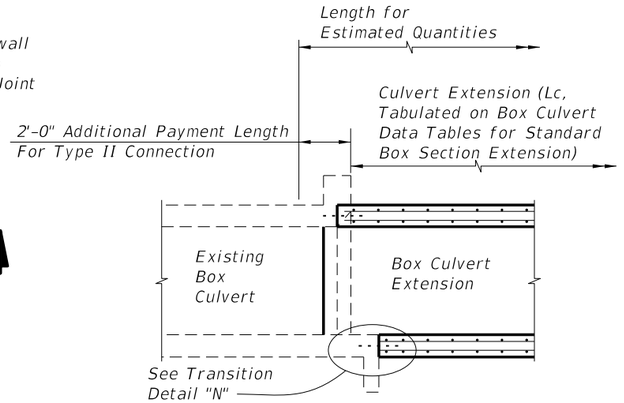

SECTION B-B

STRAIGHT WINGWALL

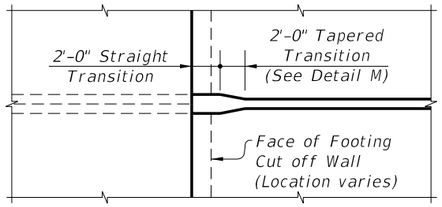

INTERIOR DOUBLE WALLS OF BOXES

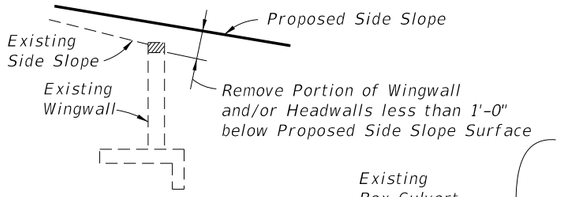

SECTION C-C

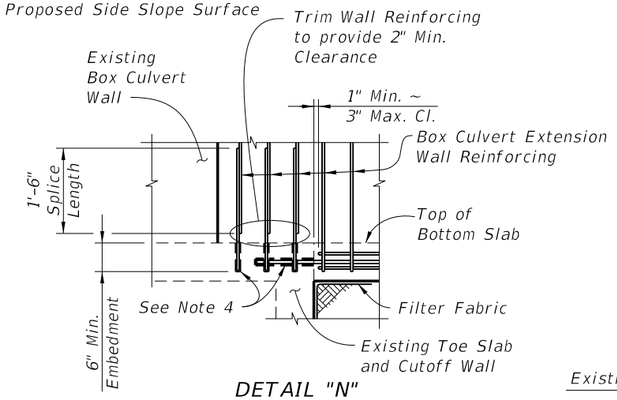

DETAIL "N"

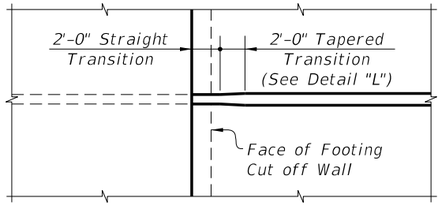

INTERIOR SINGLE WALLS OF BOXES

PLAN VIEWS

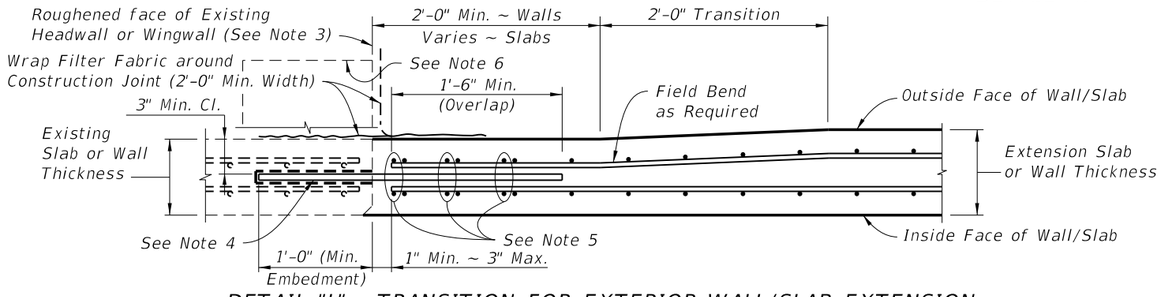

DETAIL "L" - TRANSITION FOR EXTERIOR WALL/SLAB EXTENSION
(Interior Single Walls Similar)

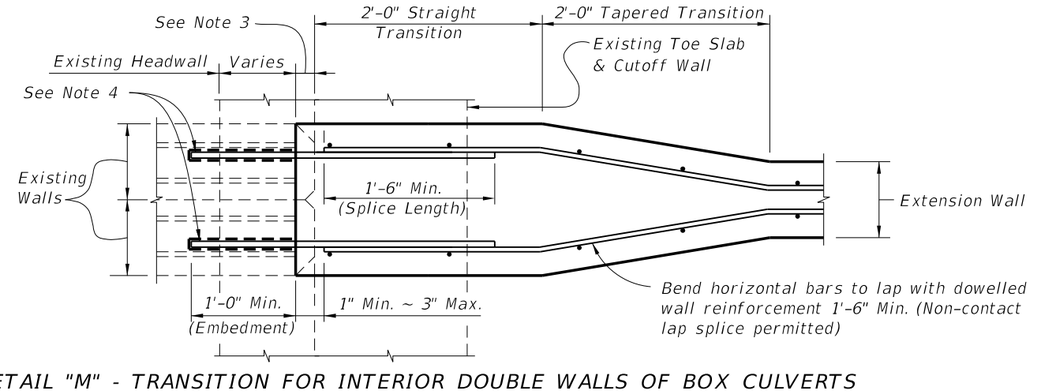

DETAIL "M" - TRANSITION FOR INTERIOR DOUBLE WALLS OF BOX CULVERTS

NOTES:

1. The Box Culvert Data Tables and Reinforcing Bar List do not include the additional quantities needed for dowel connections or transitions from double walls of existing concrete box culverts; the cost for additional reinforcement and the thickened concrete wall in the transitional area shall be included in the costs for concrete and steel in the culvert extension.
2. Cost for roughening and cleaning existing headwalls, wingwalls and box, and cost of doweling longitudinal reinforcing steel shall be included in the cost for concrete and steel of the culvert extension.
3. Remove existing concrete and reinforcing back to edge of any chamfers exceeding 1". Roughen and clean existing or exposed surface and coat with a Type A epoxy bonding compound in accordance with the manufacturer's recommendations.
4. Dowel in #5 Bars @ 1'-0" max. spacing horizontally into center of wall/slab. Provide vertical dowels in footing to match size, alignment and spacing of outside vertical wall reinforcing. Use an Adhesive Bonding Material System in accordance with Specifications Section 416 & 937.
5. Provide additional transverse bars for top and bottom slab, parallel and full width of any skewed joint connection when shown in the Plans.
6. Remove top of existing headwall when necessary to provide 1'-0" clearance below finished grade. Saw cut full width and seal with Type F-2 epoxy compound to protect exposed reinforcing.
7. See Box Culvert Data Table notes in Plans for Connection Types allowed.

TYPE II CONNECTION DETAILS FOR CONCRETE BOX CULVERT EXTENSIONS
(ADHESIVE DOWEL TO EXISTING CONCRETE)

C:\fdot\projects\standards\structures\2013book\00289-7of8.dgn
rd960rh
1:55:41 PM
6/28/2012

LAST REVISION	REVISION	DESCRIPTION:		FDOT DESIGN STANDARDS 2013	CONCRETE BOX CULVERT DETAILS (LRFD)	INDEX NO.	SHEET NO.
07/01/12						289	7

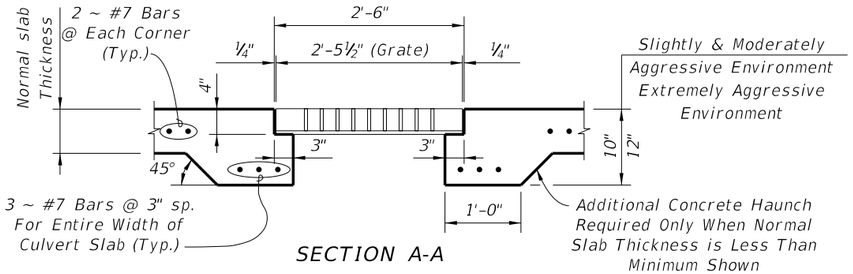

SECTION A-A

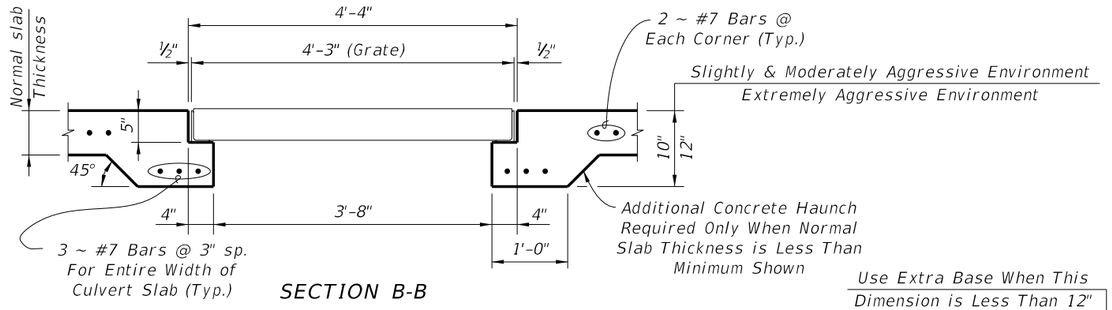

SECTION B-B

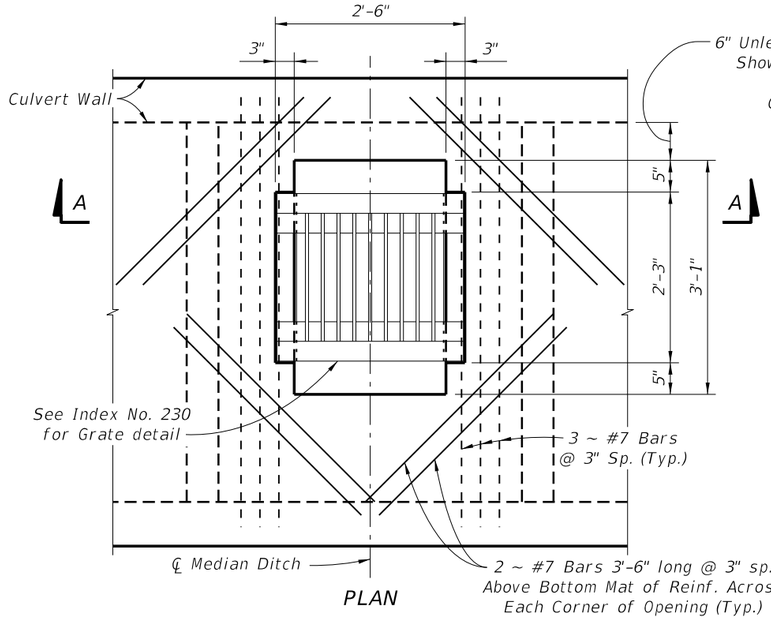

PLAN

INLET TYPE A GRATE

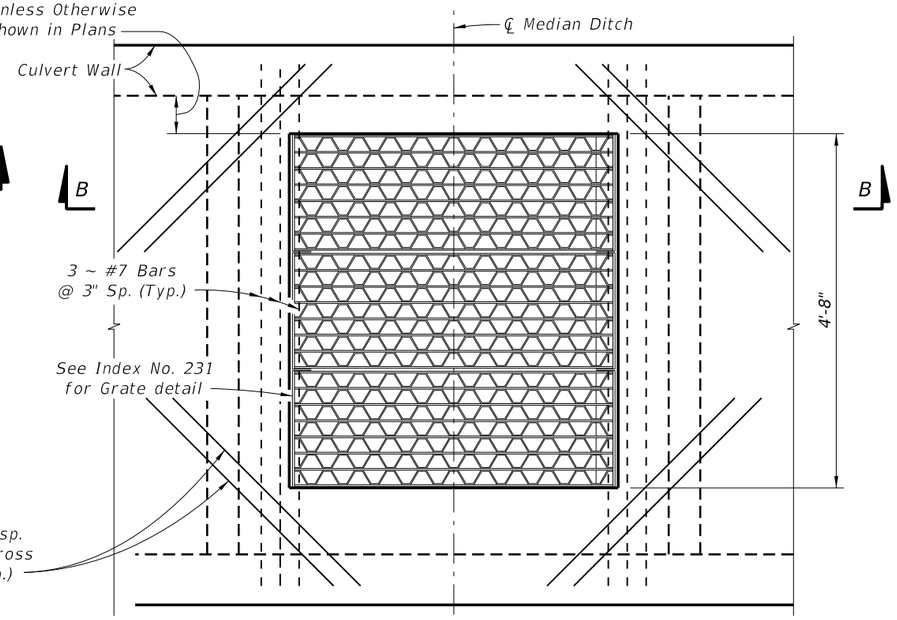

PLAN

INLET TYPE B GRATE

NOTES:

1. Cost of Steel Grating to be included in cost of Box Culvert.
2. All reinforcing shall be 2" clear for Slightly and Moderately Aggressive Environments, and 3" clear for Extremely Aggressive Environments.

INLET IN TOP OF BOX CULVERT

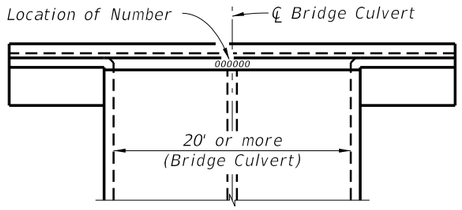

The number is to be placed in the center of the top surface of all bridge culvert headwalls. For Bridge Number see Plan-Profile sheet(s).

TOP VIEW OF HEADWALL

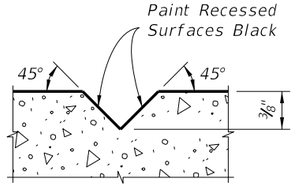

SECTION THRU RECESSED V-GROOVE TO FORM INSCRIBED FIGURES

Black Plastic Figures 3" in height as approved by the Engineer may be used in lieu of numbers formed by ⅜" V-Grooves. V-Grooves shall be formed by preformed figures.

BRIDGE CULVERT NUMBER LOCATION

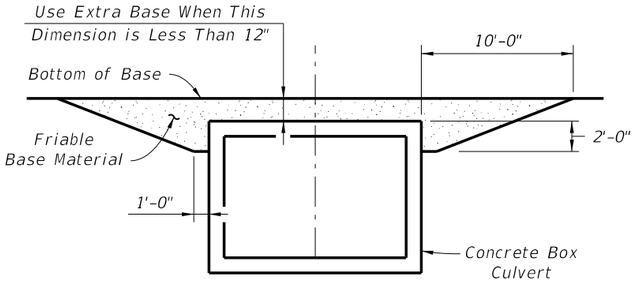

The cost of furnishing and installing extra friable base material shall be included in the cost of the Box Culvert.

FRIABLE BASE

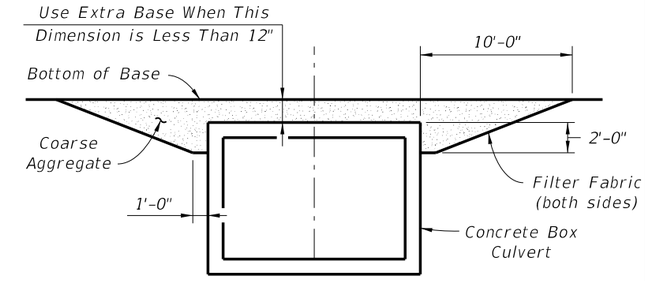

Place coarse aggregate in 6 inch lifts and compact sufficiently as to be firm and unyielding. Provide coarse aggregate gravel or stone meeting the requirements of Specification Section 901-2 or 901-3 respectively. Meet the gradation requirements of Specification Section 901-6, Grades 4, 467, 5, 56 or 57 unless restricted in the plans. Provide Type D-3 filter fabric (see Index No. 199). The cost of furnishing and installing the coarse aggregate and filter fabric shall be included in the cost of the Box Culvert.

ASPHALTIC CONCRETE BASE

NOTE: Extra base is required when cross box culverts are located on facilities subject to high speed traffic (>45 mph) or high traffic volumes (>1600 ADT) and the cover is within the range specified in the notation above.

EXTRA BASE FOR BOX CULVERTS CROSSING UNDER FLEXIBLE PAVEMENT

C:\d\projects\standards\structures\2013book\00289-8of8.dgn
rd960rh
1:55:43 PM
6/28/2012

LAST REVISION	REVISION	DESCRIPTION:				
01/01/07			FDOT DESIGN STANDARDS 2013	CONCRETE BOX CULVERT DETAILS (LRFD)	INDEX NO. 289	SHEET NO. 8

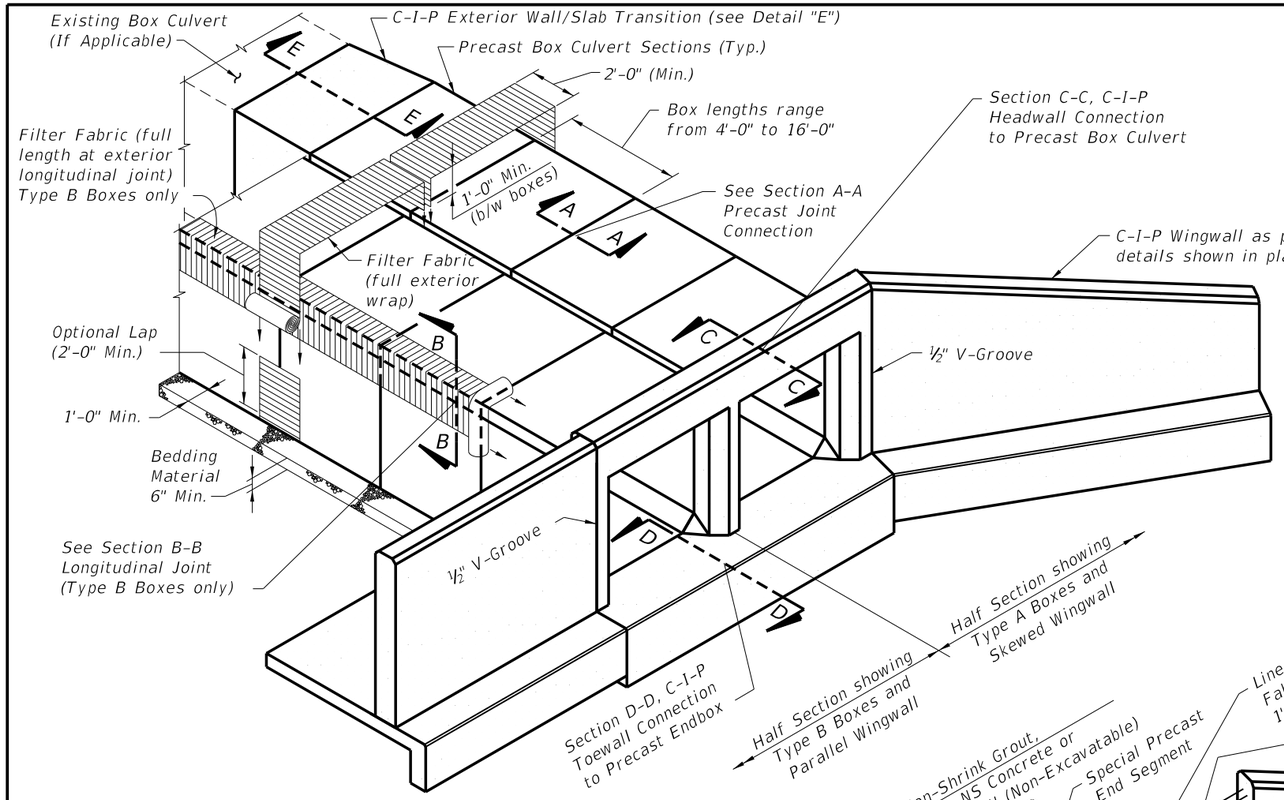

ISOMETRIC VIEW OF PRECAST CONCRETE BOX CULVERT
(Double Barrel Culvert shown, Single or Multiple Barrel Culvert similar)

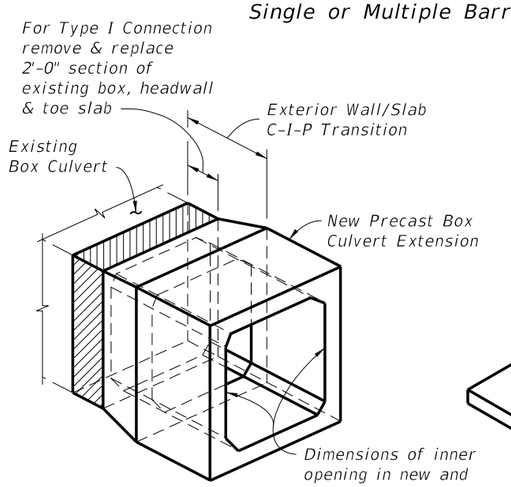

DETAIL E
PICTORIAL VIEW OF EXTERIOR WALL/SLAB TRANSITION

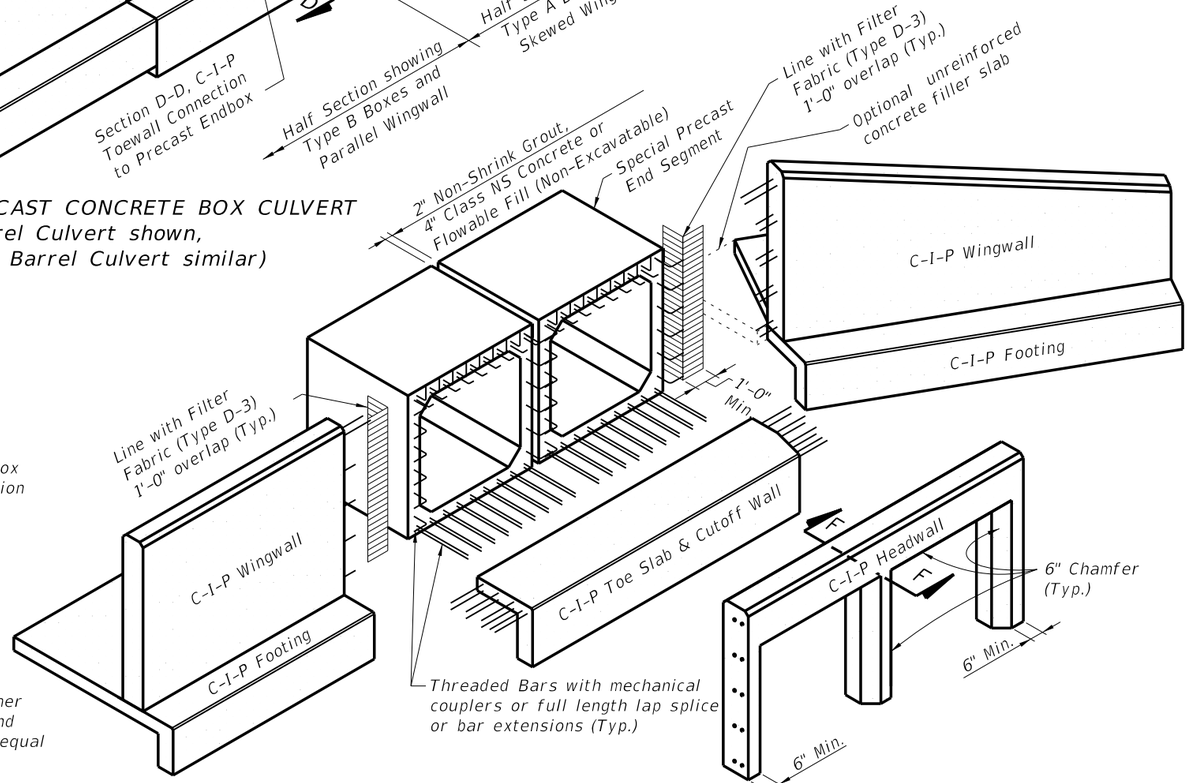

EXPLODED VIEW OF CONNECTIONS AT END OF CULVERT
(Double Barrel Culvert shown, Single or Multiple Barrel Culvert similar)

PERMITTED PRECAST ALTERNATE BOX SECTIONS

TYPE	DESCRIPTION	SINGLE BARREL	MULTIPLE BARRELS	DESIGN NOTES
A	Single Cell Monolithic (Four Sided)		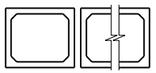	Index No. 292 or Contractor Design
B	Single Cell Two-Piece (Four Sided)		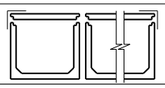	Contractor Design
C	Multicell Monolithic	Not Applicable	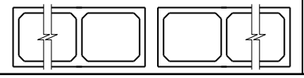	Contractor Design

GENERAL NOTES:

1. Specifications:
   - General:
     FDOT Standard Specifications for Road and Bridge Construction, Section 410 (current edition, and supplements thereto).
   - Concrete (Precast):
     Class III or Class II Modified (5,000 psi) for slightly aggressive environments.
     Class IV (5,500 psi) for moderately to extremely aggressive environments.
   - Concrete (Cast-In-Place):
     Class II (3,400 psi) for slightly aggressive environments.
     Class IV (5,500 psi) for moderately to extremely aggressive environments.
   - Reinforcing Steel:
     Maintain minimum clearance of 2" for slightly and moderately aggressive environments or 3" for extremely aggressive environments, unless otherwise shown. Equal area substitution of welded wire (WWR) reinforcement is permitted.
2. Work this Index with the Cast-In-Place Concrete Box Culvert Details and Data Tables shown in the plans, Index No. 289 and the Precast Concrete Box Culverts shown in the shop drawings.
3. All joints between precast sections must be tongue & groove with joint sealant. Joints between cast-in-place & precast sections shall have longitudinal reinforcing extending from top, bottom & both side slabs of the precast box tied to the cast-in-place reinforcement. Single barrel culverts may have precast headwalls cast integrally with the end segment when approved by the Engineer.
4. Extension of existing multiple barrel box culverts with multiple single cell precast box culverts is not permitted unless approved by the District Structures Engineer. Full transition details must be shown in the shop drawings when approved.
5. Culverts larger than the specified size may be substituted with no additional payment to the Contractor. Substitution must be approved by the Engineer, minimum earth cover and invert elevations shown in the Contract Documents must be maintained.

C:\d\projects\standards\structures\2013book\00291-1of5.dgn
rd960rh
1:55:48 PM
6/28/2012

LAST REVISION	REVISION	DESCRIPTION:			INDEX NO.	SHEET NO.
01/01/11			FDOT DESIGN STANDARDS 2013	SUPPLEMENTAL DETAILS FOR PRECAST CONCRETE BOX CULVERTS	291	1

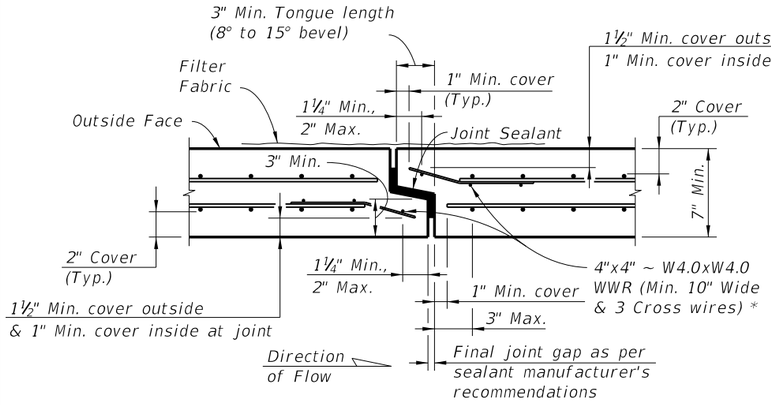

SECTION A-A
(2" Cover - Thin Wall Detail)

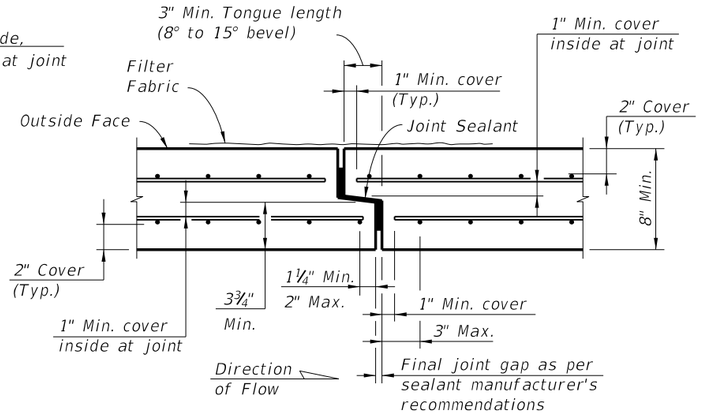

SECTION A-A
(2" Cover - Thick Wall Detail)

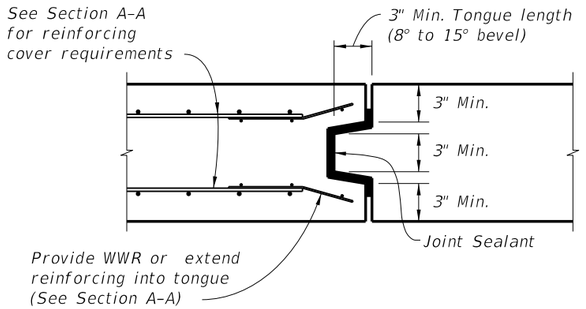

ALTERNATE BOTTOM SLAB TRANSVERSE JOINT
TYPICAL SECTION
(DOUBLE-SIDED TONGUE & GROOVE JOINT)
(All reinforcing not shown for clarity)

NOTE:
Bottom Slab Joints in Type B Boxes may be single tongue & groove joints as shown in Section A–A when the Top Slab Joints are oriented as shown in Schematic "A".

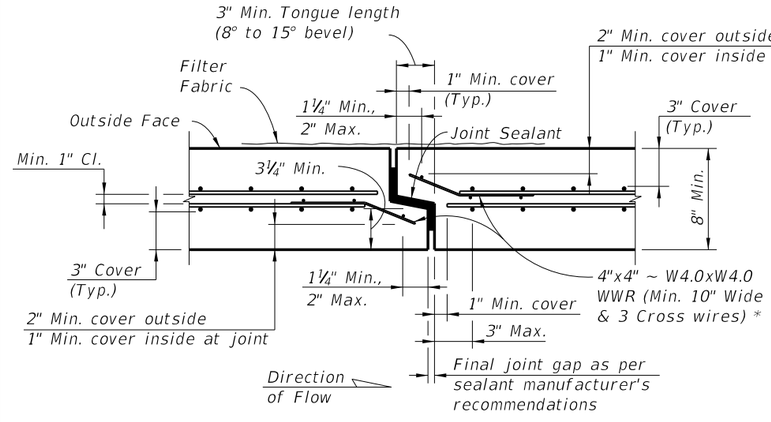

SECTION A-A
(3" Cover - Thin Wall Detail)

* *At the Contractor's option when the box culvert reinforcing utilizes WWR, extend wall and slab reinforcing into the joint and bend to maintain cover in lieu of 4"x4" ~ W4.0xW4.0 WWR at joint. Transverse wire in tongue may be cut at corners of box to allow bending of the WWR.*

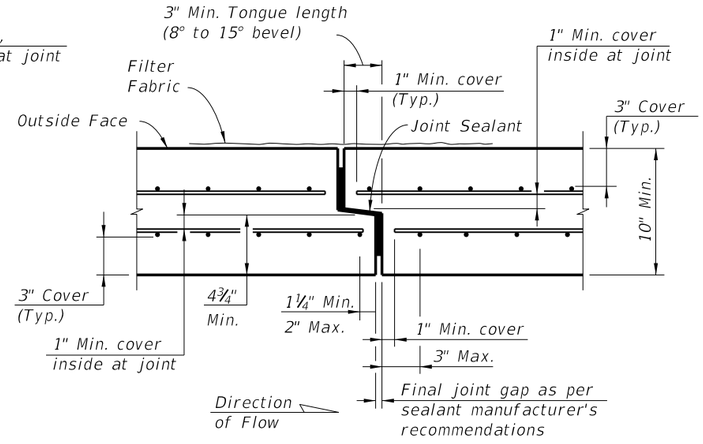

SECTION A-A
(3" Cover - Thick Wall Detail)

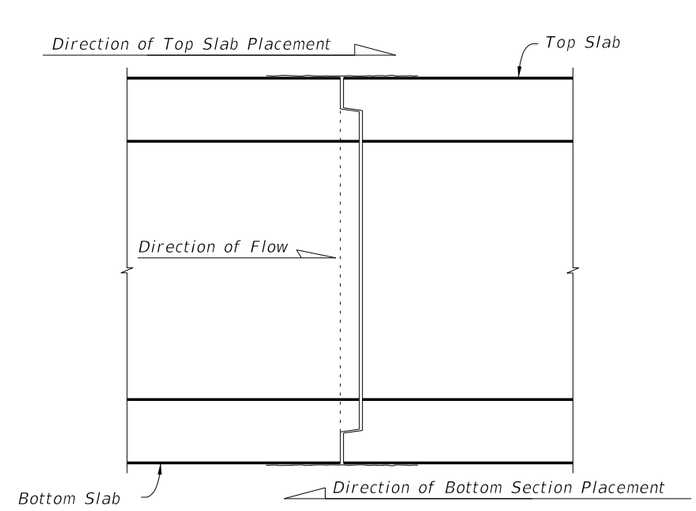

SCHEMATIC "A"
TYPE B BOX SECTION PLACEMENT
FOR SINGLE TONGUE & GROOVE JOINTS

PRECAST SEGMENT TO SEGMENT TONGUE & GROOVE TRANSVERSE JOINTS

TWO-PIECE PRECAST SEGMENT ADDITIONAL JOINT DETAILS (TYPE B BOX)

C:\d\projects\standards\structures\2013book\00291-2of5.dgn
rd960rh
1:55:51 PM
6/28/2012

LAST REVISION	REVISION	DESCRIPTION:				
07/01/06			FDOT DESIGN STANDARDS 2013	SUPPLEMENTAL DETAILS FOR PRECAST CONCRETE BOX CULVERTS	INDEX NO. 291	SHEET NO. 2

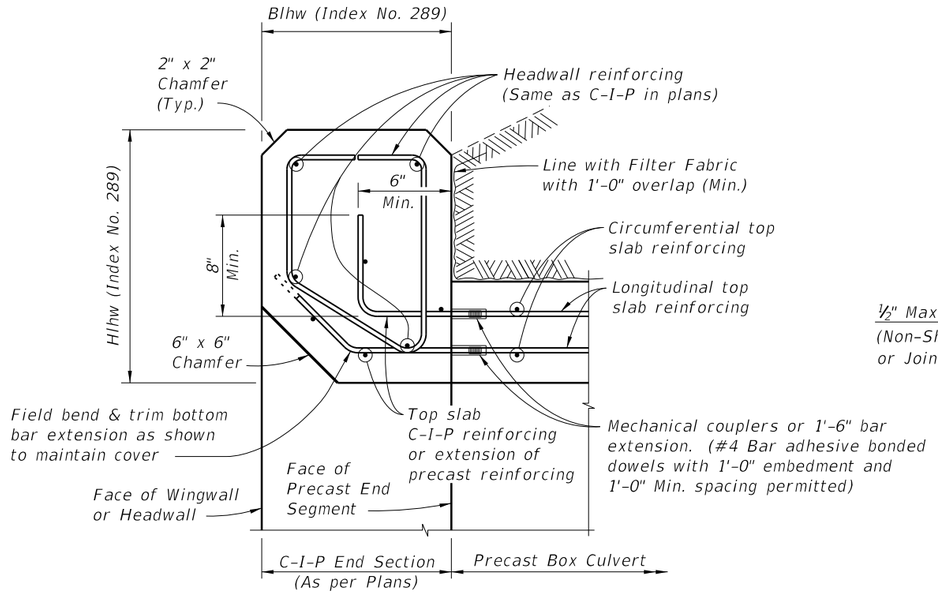

SECTION C-C
C-I-P HEADWALL DETAILS AND CONNECTION TO PRECAST BOX

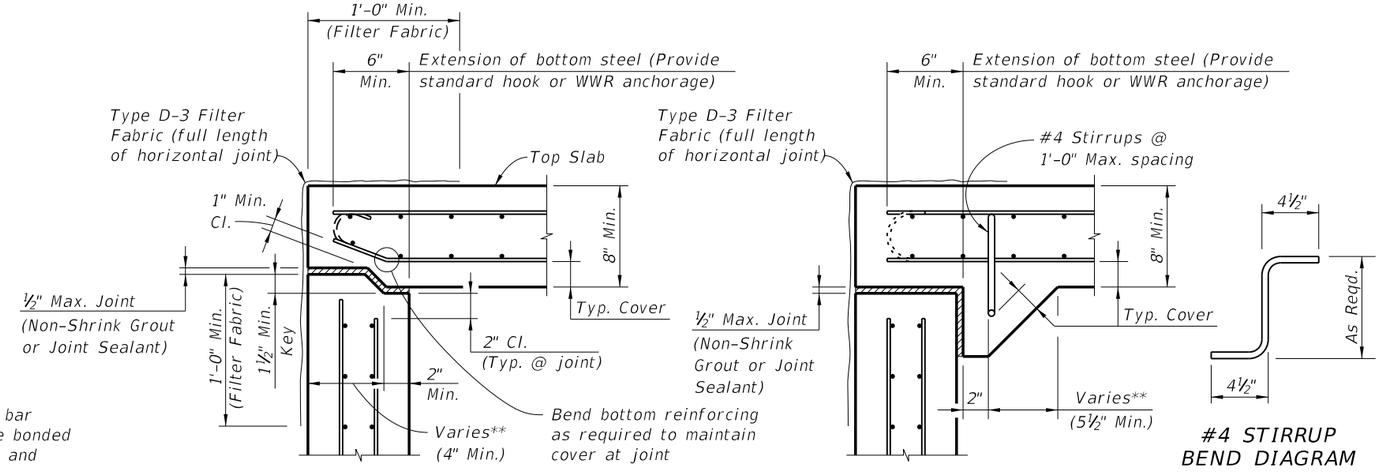

SECTION B-B
TOP SLAB TO WALL JOINT
(KEYED JOINT)

SECTION B-B
TOP SLAB TO WALL JOINT
(HAUNCHED JOINT)

#4 STIRRUP
BEND DIAGRAM

** Provide adequate width to satisfy shear strength requirements at joint

TYPE B BOX LONGITUDINAL JOINTS

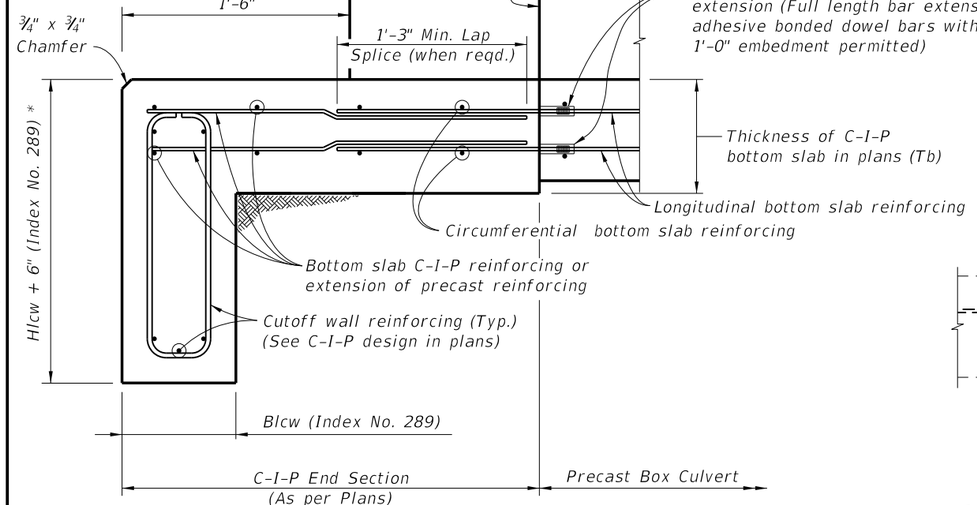

SECTION D-D
C-I-P TOE SLAB & CUTOFF WALL DETAILS
AND CONNECTION TO PRECAST BOX

* Provide additional 6" depth of cutoff wall at no additional cost.

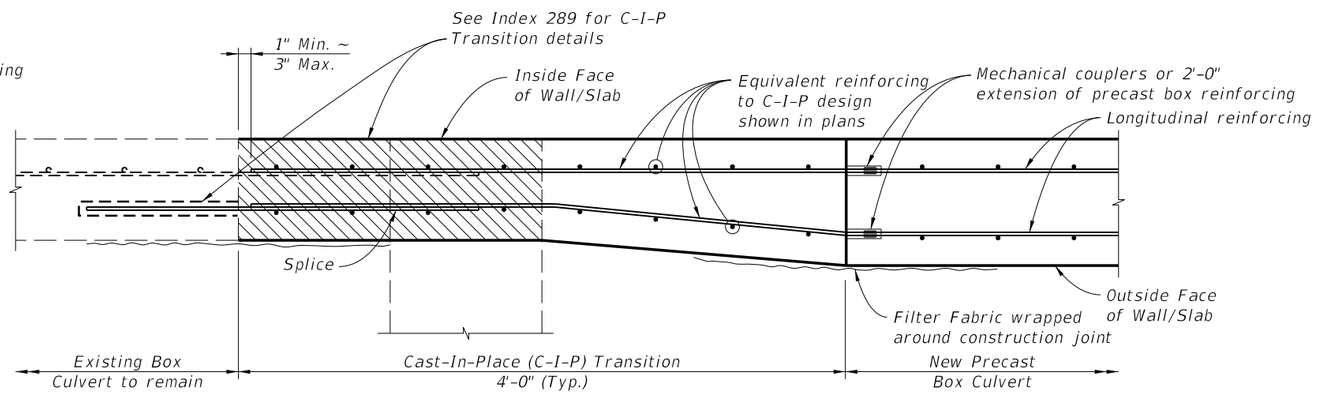

SECTION E-E
EXTERIOR WALL/SLAB TRANSITION DETAIL FOR PRECAST EXTENSION
(Type I Connection shown, Type II Connection similar)

C:\d\projects\standards\structures\2013book\00291-3of5.dgn
rd960rh
1:55:53 PM
6/28/2012

LAST REVISION	REVISION	DESCRIPTION:				
01/01/12			STATE OF FLORIDA DEPARTMENT OF TRANSPORTATION	FDOT DESIGN STANDARDS 2013	SUPPLEMENTAL DETAILS FOR PRECAST CONCRETE BOX CULVERTS	INDEX NO. 291 / SHEET NO. 3

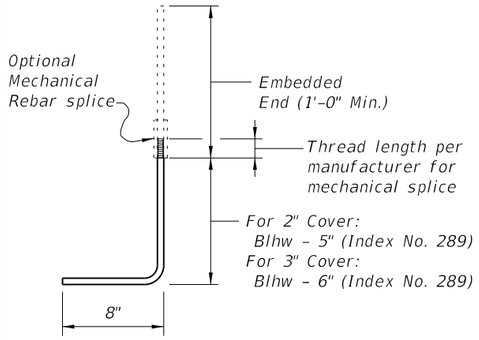

#4 BAR END CAP ANCHOR
BAR BEND DIAGRAM

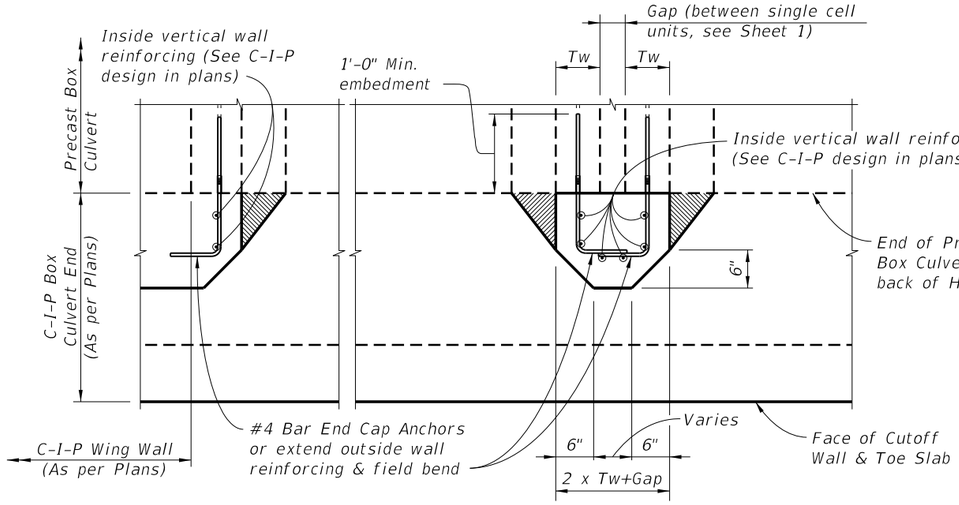

SECTION H-H

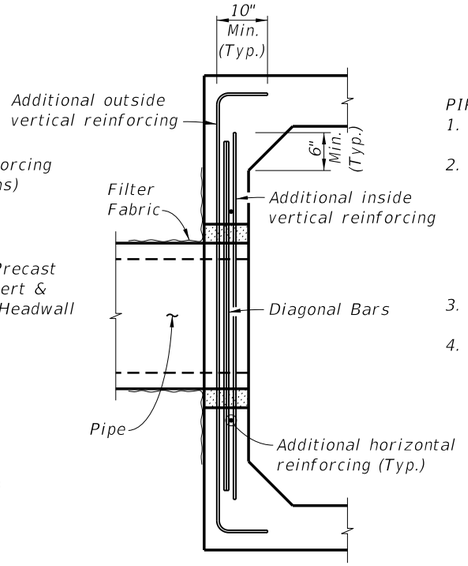

PIPE BLOCKOUT NOTES:

1. Cut box culvert reinforcement as required to maintain 2" cover.
2. For Precast Sections construct opening a minimum of 1'-6" away from any box to box joint, except opening may be a minimum of 1'-0" away from joint when at least 2'-0" of clearance to the box to box joint is provided on the opposite side of the pipe opening.
3. Pipe blockout diameter to be 6" greater than pipe outside diameter.
4. See Drainage Plans for size, placement, and invert elevation.

SECTION I-I
(Showing additional blockout reinforcing only)

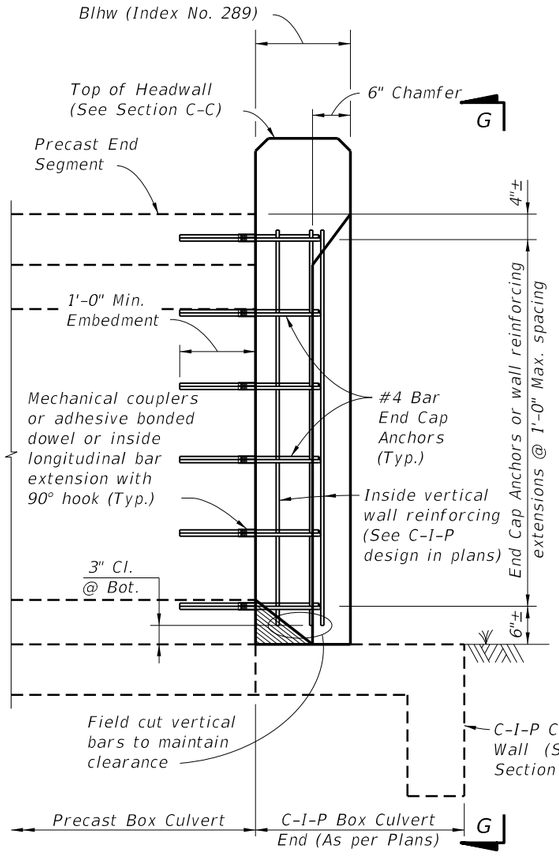

SECTION F-F

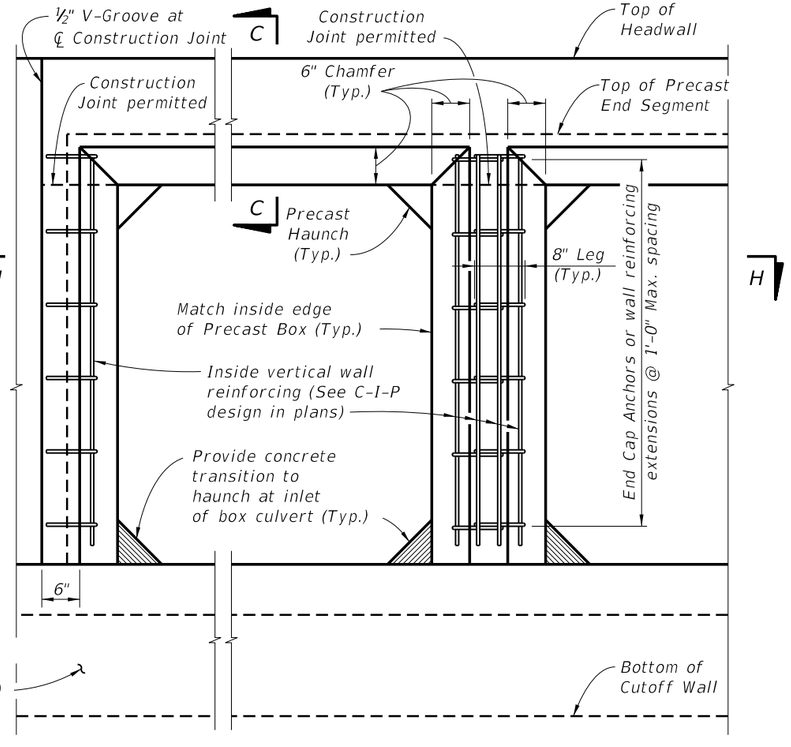

VIEW G-G
(Headwall, Toe Slab and Cutoff Wall Reinforcing not shown for clarity)

C-I-P END CAP DETAILS AND CONNECTION TO PRECAST BOX

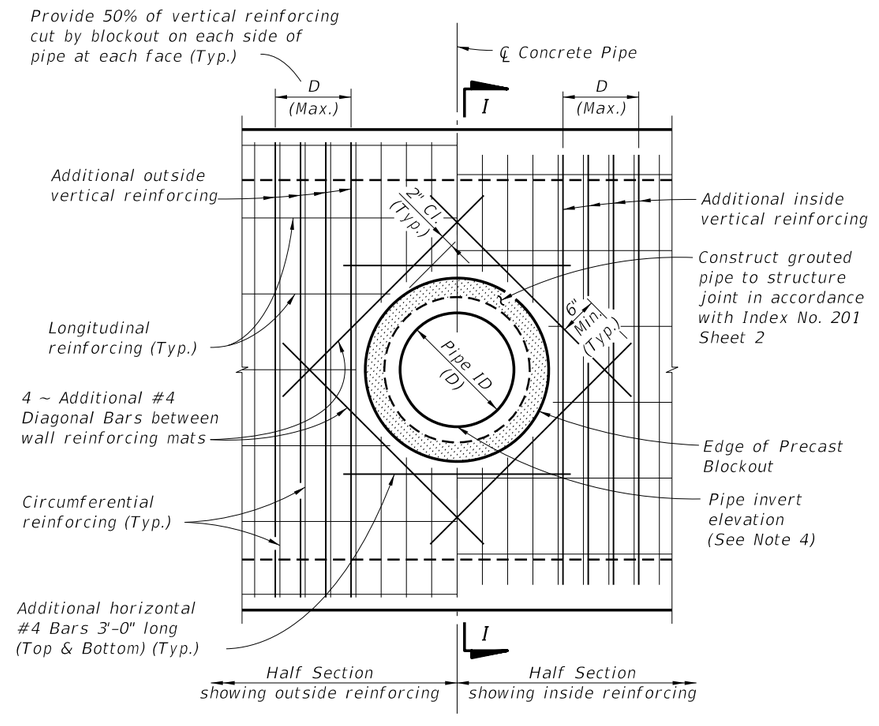

ELEVATION VIEW

PIPE BLOCKOUT DETAILS

LAST REVISION	REVISION	DESCRIPTION:		FDOT DESIGN STANDARDS 2013	SUPPLEMENTAL DETAILS FOR PRECAST CONCRETE BOX CULVERTS	INDEX NO.	SHEET NO.
07/01/07						291	4

C:\d\projects\standards\structures\2013book\00291-4of5.dgn
rd960rh
1:55:56 PM
6/28/2012

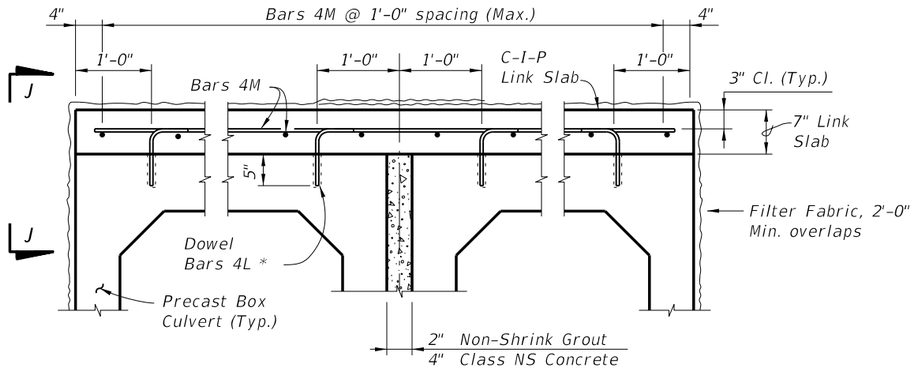

LINK SLAB TYPICAL SECTION
(Multiple Barrel Culvert shown, Single Barrel Culvert similar)

* Install dowels with an Adhesive Bonding Material System in accordance with Specification Section 416. The Contractor may substitute mechanical couplers in lieu of adhesive bonded dowels. Shift dowels to clear box culvert reinforcing.

LINK SLAB NOTES:

1. Provide a Cast-In-Place Link Slab to ensure uniform joint opening of precast box culverts when the differential settlement shown in the plans exceeds the following limits, except that a Link Slab is not required for differential settlements less than ½".

$$\Delta Y \leq \frac{(L)^2}{760 \times R \times W}$$

Where:
ΔY = Maximum Long-Term Differential Settlement (ft.)
R = Exterior height of Box Culvert (ft.)
W = Length of Box Culvert Segments (ft.)
L = Effective length for single curvature deflection (ft.)

2. Extend Link Slab to back face of headwalls and to limits of existing box culverts for extensions.

ESTIMATED LINK SLAB QUANTITIES		
ITEM	UNIT	QUANTITY
Class II or IV Concrete (Culvert)	CY/SF	0.0216
Reinforcing Steel (Roadway)	Lb./SF	1.52

NOTE: Estimated quantities are based the plan area of precast box slabs, and are provided for information only. No additional payment will be made for Link Slabs where these are required for the precast box culverts.

BILL OF REINFORCING STEEL			
MARK	SIZE	NO. REQ'D	LENGTH
L	4	2 per Barrel/Ft.	1'-3"
M	4	As Reqd.	As Reqd.

REINFORCING STEEL BENDING DIAGRAMS

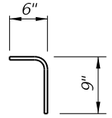

DOWEL BARS 4L

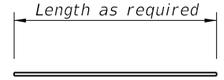

BAR 4M

NOTES:
1. All bar dimensions are out to out.
2. Lap splice length for Bars 4M is 1'-4" minimum.

DESIGN NOTE:

1. Link Slab required when joint openings from differential settlement exceed ⅛" as determined in Link Slab Note 1.

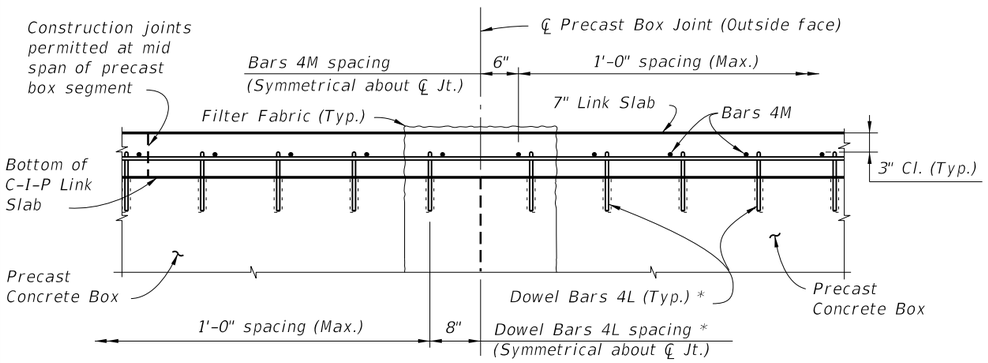

VIEW J-J

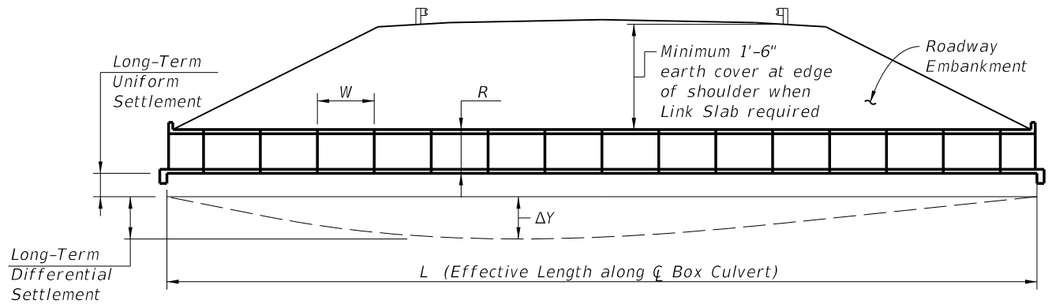

SCHEMATIC LONGITUDINAL SECTION (NEW CONSTRUCTION)

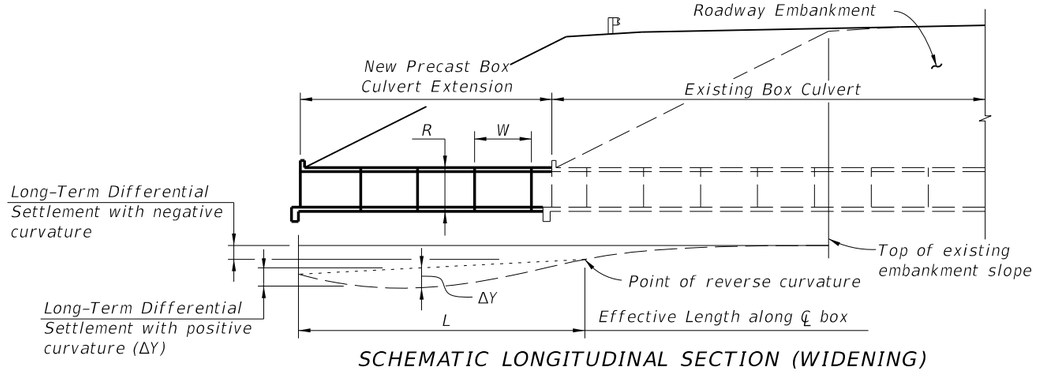

SCHEMATIC LONGITUDINAL SECTION (WIDENING)

DIFFERENTIAL SETTLEMENT COUNTERMEASURES FOR PRECAST BOX CULVERTS

C:\d*projects\standards\structures\2013book\00291-5of5.dgn rd960rh 1:55:58 PM 6/28/2012

LAST REVISION	REVISION	DESCRIPTION:				
01/01/09			FDOT DESIGN STANDARDS 2013	SUPPLEMENTAL DETAILS FOR PRECAST CONCRETE BOX CULVERTS	INDEX NO. 291	SHEET NO. 5

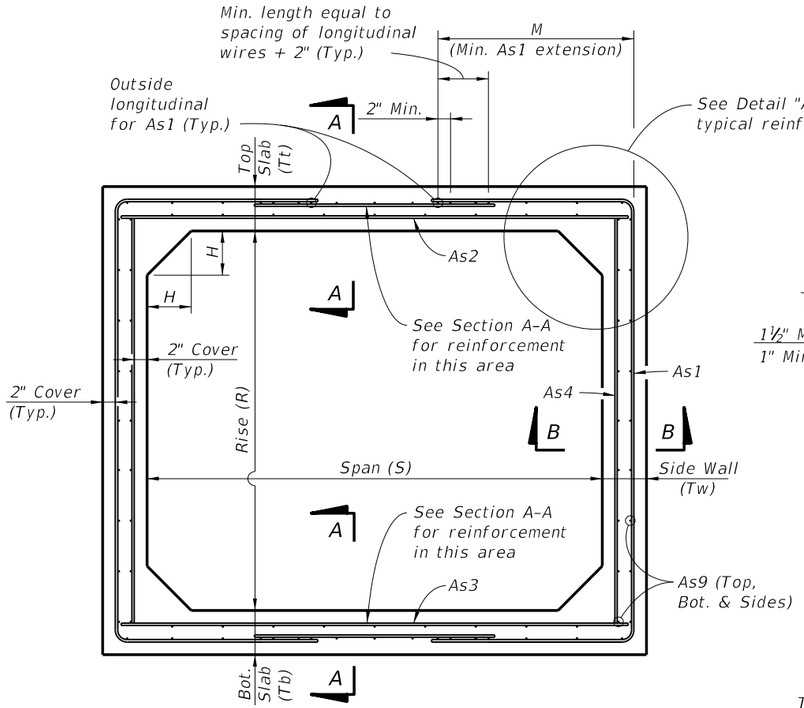

TYPICAL BOX SECTION (TYPE 2)
DESIGN EARTH COVER 2' OR GREATER
(Option 1 Reinforcing Configuration Shown)

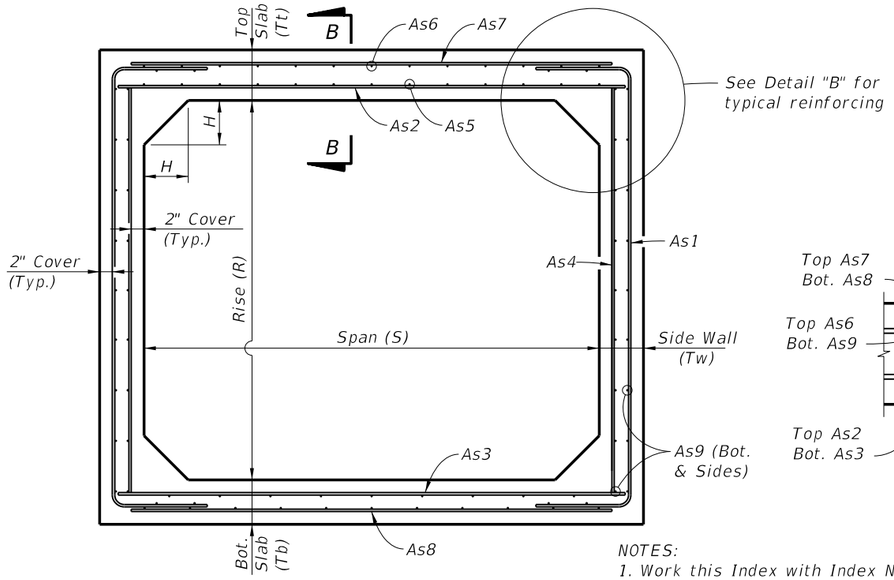

TYPICAL BOX SECTION (TYPE 1)
DESIGN EARTH COVER LESS THAN 2'
(Option 1 Reinforcing Configuration Shown)

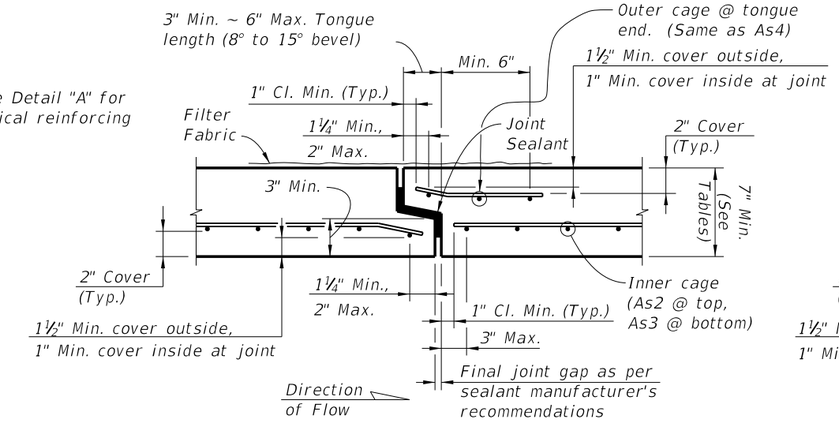

SECTION A-A

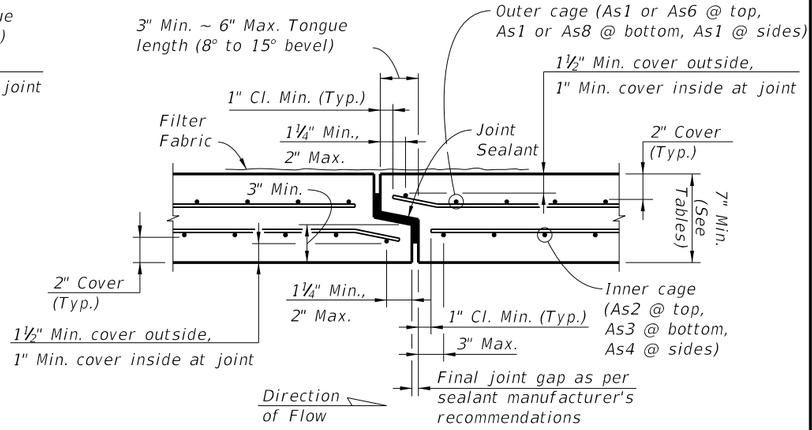

SECTION B-B
TYPICAL SECTION THRU JOINT

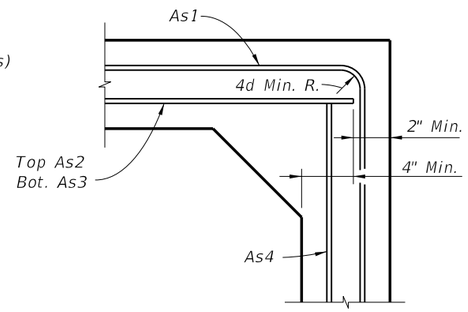

DETAIL "A"
(OPTION 1)

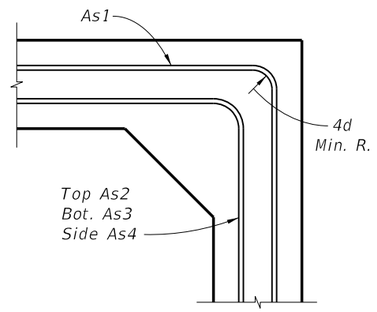

DETAIL "A"
(OPTION 2)

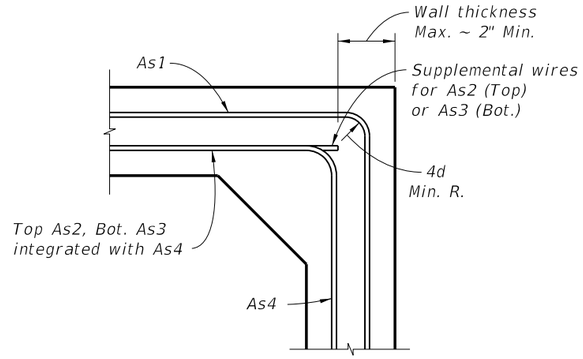

DETAIL "A"
(OPTION 3)

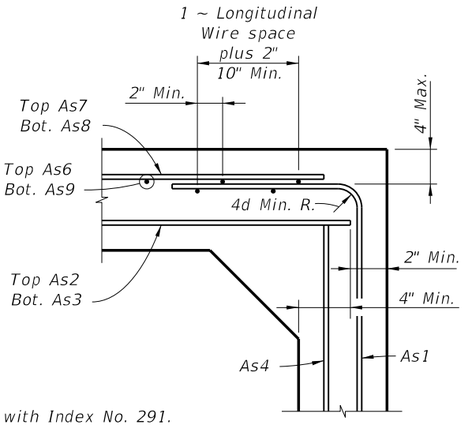

DETAIL "B"
(OPTION 1)

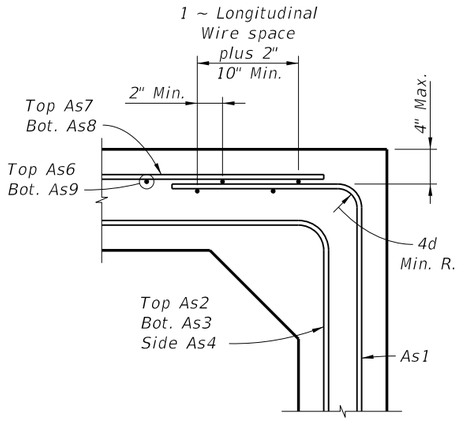

DETAIL "B"
(OPTION 2)

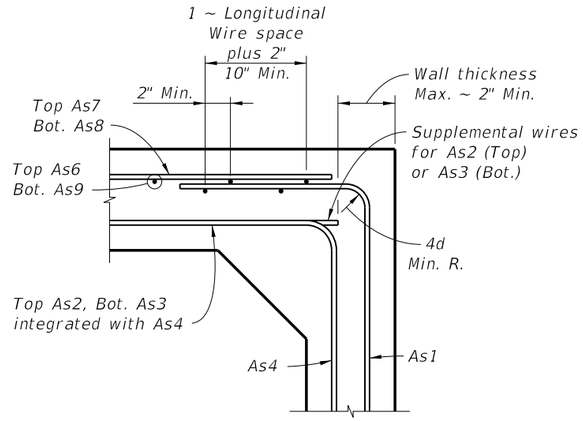

DETAIL "B"
(OPTION 3)

NOTES:
1. Work this Index with Index No. 291.
2. See sheets 2 thru 5 for dimensions and areas of reinforcement.

STANDARD PRECAST BOX CULVERT WITH 2" CONCRETE COVER

LAST REVISION	REVISION	DESCRIPTION:				
01/01/12			FDOT DESIGN STANDARDS 2013	STANDARD PRECAST CONCRETE BOX CULVERTS	INDEX NO. 292	SHEET NO. 1

6/28/2012 1:56:01 PM rd960rh C:\d\projects\standards\structures\2013book\00292-01of14.dgn

GENERAL NOTES:

1. These precast designs may be substituted for cast-in-place box culverts designed to AASHTO LRFD Bridge Design Specifications, 4th Edition. Designs are based on the design criteria shown in FDOT Structures Design Guidelines.
2. Loading: HL-93 & any fill heights between the minimum & maximum shown.
3. Only one design of precast box culvert is to be used for any installation.
4. Reinforcing steel must consist of smooth or deformed welded wire reinforcement (WWR) conforming to ASTM A185 or A497. Longitudinal reinforcement may consist of ASTM A615 Grade 60 bars. Minimum cover must be 2" unless otherwise shown. The spacing of circumferential wires must not be less than 2" nor more than 4". The spacing of longitudinal wires or bars must not be more than 8".
5. As9 longitudinal wires must have a minimum cross-sectional area of 40% of the circumferential wires, but not less than a W2.5 or D2.5 for WWR, or #3 bars for ASTM A615 deformed bars.
6. Welding of reinforcement must be limited to the locations shown in ASTM C1577 and in accordance with ANSI/AWS D1.4 "Structural Welding Code - Reinforcing Steel".
7. For alternate reinforcing configuration Options 2 and 3 shown in Detail "A" and "B" (Sheet 1), As1 may be extended to the middle of either slab and lap spliced with As7 and As8. As4 may be lap spliced at any location or connected to As2 or As3 at corners by welding.
8. Haunch dimensions may vary between the minimum and maximum dimensions shown in the Design Tables but only one haunch dimension must be used within the full length of the box culvert installation.
9. Submittal of redesign calculations are not required for any increase to the slab and/or wall thickness when the minimum reinforcement areas shown in the Design Tables are provided.
10. For Design Earth Cover greater than 10 feet, the Contractor may interpolate the required areas of reinforcement and slab or wall thickness. Interpolated areas of reinforcement, slab or wall thickness must be approved by the Engineer.
11. Minimum length of precast box segments is 4 feet and maximum length is 16 feet.
12. See Index No. 291 for connections to wingwalls, headwalls and other general details.

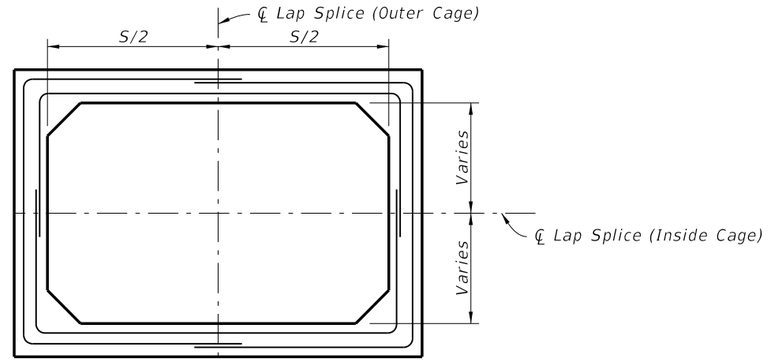

SCHEMATIC OF LAP SPLICE LOCATIONS
FOR OPTION 2 & 3 REINFORCING CONFIGURATIONS

TABLE 1A - STANDARD PRECAST BOX CULVERT DESIGNS (2" COVER) - 3' & 4' SPANS

SPAN x RISE (S) (R) (Ft.)	SLAB / WALL THICKNESS TOP (Tt) (in.)	BOT. (Tb) (in.)	SIDE (Tw) (in.)	HAUNCH (H) (in.)	DESIGN EARTH COVER ABOVE TOP SLAB	REINFORCEMENT AREAS (sq. in./Ft.) As1	As2	As3	As4	As5	As6	As7	As8	As9	As1 EXT. LENGTH (M) (in.)
3' x 3'	7	7	7	4	0.33" - <2'	0.17	0.29	0.21	0.17	0.17	0.17	0.17	0.17	See General Note 5	–
					2' - <3'	0.13	0.28	0.21	0.09	–	–	–	–		31
					3' - <5'	0.09	0.17	0.17	0.09	–	–	–	–		31
				to	5' - 10'	0.09	0.17	0.17	0.09	–	–	–	–		31
					15'	0.09	0.17	0.17	0.09	–	–	–	–		31
					20'	0.12	0.17	0.17	0.09	–	–	–	–		31
					25'	0.14	0.18	0.18	0.09	–	–	–	–		31
				8	30'	0.17	0.21	0.22	0.09	–	–	–	–		31
					35'	0.19	0.25	0.25	0.09	–	–	–	–		31
4' x 3'	7	7	7	4	0.33" - <2'	0.19	0.38	0.26	0.17	0.19	0.17	0.17	0.19		–
					2' - <3'	0.19	0.38	0.26	0.09	–	–	–	–		38
					3' - <5'	0.14	0.20	0.22	0.09	–	–	–	–		38
				to	5' - 10'	0.11	0.17	0.17	0.09	–	–	–	–		38
					15'	0.15	0.17	0.18	0.09	–	–	–	–		38
					20'	0.20	0.23	0.23	0.09	–	–	–	–		38
				8	25'	0.24	0.28	0.29	0.09	–	–	–	–		38
					30'	0.29	0.34	0.35	0.09	–	–	–	–		38
4' x 4'	7	7	7	4	0.33" - <2'	0.19	0.41	0.28	0.17	0.21	0.17	0.17	0.19		–
					2' - <3'	0.19	0.41	0.28	0.09	–	–	–	–		38
					3' - <5'	0.14	0.21	0.24	0.09	–	–	–	–		38
				to	5' - 10'	0.12	0.17	0.17	0.09	–	–	–	–		38
					15'	0.16	0.19	0.20	0.09	–	–	–	–		38
					20'	0.21	0.25	0.25	0.09	–	–	–	–		38
				8	25'	0.26	0.31	0.32	0.09	–	–	–	–		38
					30'	0.31	0.37	0.38	0.09	–	–	–	–		38

TABLE 1B - STANDARD PRECAST BOX CULVERT DESIGNS (2" COVER) - 3' & 4' SPANS

SPAN x RISE (S) (R) (Ft.)	SLAB / WALL THICKNESS TOP (Tt) (in.)	BOT. (Tb) (in.)	SIDE (Tw) (in.)	HAUNCH (H) (in.)	DESIGN EARTH COVER ABOVE TOP SLAB	REINFORCEMENT AREAS (sq. in./Ft.) As1	As2	As3	As4	As5	As6	As7	As8	As9	As1 EXT. LENGTH (M) (in.)
3' x 3'	8	8	8	4	0.33" - <2'	0.20	0.26	0.32	0.20	0.20	0.20	0.20	0.20	See General Note 5	–
					2' - <3'	0.16	0.25	0.31	0.10	–	–	–	–		31
					3' - <5'	0.10	0.20	0.20	0.10	–	–	–	–		31
				to	5' - 10'	0.10	0.20	0.20	0.10	–	–	–	–		31
					15'	0.10	0.20	0.20	0.10	–	–	–	–		31
					20'	0.10	0.20	0.20	0.10	–	–	–	–		31
					25'	0.11	0.20	0.20	0.10	–	–	–	–		31
				8	30'	0.13	0.20	0.20	0.10	–	–	–	–		31
					35'	0.15	0.21	0.21	0.10	–	–	–	–		31
4' x 3'	8	8	8	4	0.33" - <2'	0.20	0.31	0.22	0.20	0.20	0.20	0.20	0.20		–
					2' - <3'	0.12	0.31	0.22	0.10	–	–	–	–		38
					3' - <5'	0.12	0.20	0.20	0.10	–	–	–	–		38
				to	5' - 10'	0.10	0.20	0.20	0.10	–	–	–	–		38
					15'	0.12	0.20	0.20	0.10	–	–	–	–		38
					20'	0.16	0.20	0.20	0.10	–	–	–	–		38
				8	25'	0.19	0.24	0.24	0.10	–	–	–	–		38
					30'	0.22	0.28	0.29	0.10	–	–	–	–		38
4' x 4'	8	8	8	4	0.33" - <2'	0.20	0.33	0.24	0.20	0.20	0.20	0.20	0.20		–
					2' - <3'	0.17	0.33	0.24	0.10	–	–	–	–		38
					3' - <5'	0.12	0.20	0.20	0.10	–	–	–	–		38
				to	5' - 10'	0.10	0.20	0.20	0.10	–	–	–	–		38
					15'	0.13	0.20	0.20	0.10	–	–	–	–		38
					20'	0.16	0.21	0.22	0.10	–	–	–	–		38
				8	25'	0.20	0.26	0.27	0.10	–	–	–	–		38
					30'	0.23	0.31	0.32	0.10	–	–	–	–		38

NOTES: 1. See Sheet 1 for Reinforcing Details and dimension locations.
2. See Sheet 14 for WWR Bending Diagram.

C:\d\projects\standards\structures\2013book\00292-02of14.dgn
rd960rh
1:56:03 PM
6/28/2012

LAST REVISION	REVISION	DESCRIPTION:				
01/01/12			FDOT DESIGN STANDARDS 2013	STANDARD PRECAST CONCRETE BOX CULVERTS	INDEX NO. 292	SHEET NO. 2

TABLE 2A - STANDARD PRECAST BOX CULVERT DESIGNS (2" COVER) - 5' & 6' SPANS

SPAN x RISE (S) (R) (Ft.)	SLAB / WALL THICKNESS TOP (Tt) (in.)	BOT. (Tb) (in.)	SIDE (Tw) (in.)	HAUNCH (H) (in.)	DESIGN EARTH COVER ABOVE TOP SLAB	REINFORCEMENT AREAS (sq. in./Ft.) As1	As2	As3	As4	As5	As6	As7	As8	As9	As1 EXT. LENGTH (M) (in.)
5' x 3'	7	7	7	4 to 8	0.33' - <2'	0.31	0.48	0.42	0.17	0.21	0.17	0.23	0.31	See General Note 5	–
					2' - <3'	0.31	0.48	0.42	0.09	–	–	–	–		45
					3' - <5'	0.20	0.27	0.27	0.09	–	–	–	–		36
					5' - 10'	0.17	0.19	0.21	0.09	–	–	–	–		36
					15'	0.24	0.25	0.25	0.09	–	–	–	–		35
					20'	0.32	0.33	0.33	0.09	–	–	–	–		35
					25'	0.39	0.41	0.42	0.09	–	–	–	–		35
					30'	0.47	0.50	0.50	0.09	–	–	–	–		35
5' x 4'	7	7	7	4 to 8	0.33' - <2'	0.30	0.51	0.45	0.17	0.23	0.17	0.21	0.30		–
					2' - <3'	0.30	0.51	0.45	0.09	–	–	–	–		45
					3' - <5'	0.18	0.30	0.29	0.09	–	–	–	–		45
					5' - 10'	0.17	0.21	0.23	0.09	–	–	–	–		36
					15'	0.24	0.27	0.28	0.09	–	–	–	–		35
					20'	0.31	0.36	0.37	0.09	–	–	–	–		35
					25'	0.39	0.45	0.46	0.09	–	–	–	–		35
					30'	0.46	0.55	0.56	0.09	–	–	–	–		35
5' x 5'	7	7	7	4 to 8	0.33' - <2'	0.30	0.53	0.48	0.17	0.24	0.17	0.21	0.30		–
					2' - <3'	0.29	0.53	0.48	0.09	–	–	–	–		45
					3' - <5'	0.19	0.31	0.31	0.09	–	–	–	–		45
					5' - 10'	0.19	0.22	0.25	0.09	–	–	–	–		45
					15'	0.26	0.29	0.31	0.09	–	–	–	–		36
					20'	0.34	0.39	0.40	0.09	–	–	–	–		35
					25'	0.41	0.49	0.50	0.09	–	–	–	–		35
					30'	0.49	0.59	0.61	0.09	–	–	–	–		35
6' x 3'	7.5	7	7	4 to 12	0.33' - <2'	0.39	0.54	0.48	0.17	0.22	0.18	0.25	0.39		–
	7	7	7		2' - <3'	0.39	0.58	0.49	0.09	–	–	–	–		43
					3' - <5'	0.28	0.36	0.36	0.09	–	–	–	–		39
					5' - 10'	0.25	0.26	0.28	0.09	–	–	–	–		39
					15'	0.36	0.34	0.34	0.09	–	–	–	–		38
					20'	0.47	0.46	0.46	0.09	–	–	–	–		38
	7	7.5	7		25'	0.59	0.57	0.55	0.09	–	–	–	–		38
	8	8	7		30'	0.60	0.64	0.64	0.09	–	–	–	–		38
6' x 4'	7.5	7	7	4 to 12	0.33' - <2'	0.37	0.58	0.52	0.17	0.24	0.18	0.23	0.37		–
	7	7	7		2' - <3'	0.37	0.61	0.53	0.09	–	–	–	–		43
					3' - <5'	0.26	0.39	0.39	0.09	–	–	–	–		39
					5' - 10'	0.24	0.28	0.31	0.09	–	–	–	–		39
					15'	0.35	0.37	0.38	0.09	–	–	–	–		38
					20'	0.46	0.50	0.50	0.09	–	–	–	–		38
	7	7.5	7		25'	0.56	0.63	0.60	0.09	–	–	–	–		38
	8	8	7		30'	0.58	0.69	0.69	0.09	–	–	–	–		38
6' x 5'	7.5	7	7	4 to 12	0.33' - <2'	0.36	0.60	0.56	0.17	0.25	0.18	0.22	0.36		–
	7	7	7		2' - <3'	0.36	0.64	0.56	0.09	–	–	–	–		43
					3' - <5'	0.26	0.410	0.42	0.09	–	–	–	–		43
					5' - 10'	0.25	0.30	0.33	0.09	–	–	–	–		39
					15'	0.34	0.40	0.41	0.09	–	–	–	–		38
					20'	0.46	0.54	0.54	0.09	–	–	–	–		38
	7	7.5	7		25'	0.56	0.67	0.65	0.09	–	–	–	–		38
	8	8	8		30'	0.60	0.74	0.74	0.09	–	–	–	–		38
6' x 6'	7.5	7	7	4 to 12	0.33' - <2'	0.36	0.63	0.59	0.17	0.26	0.18	0.22	.036		–
	7	7	7		2' - <3'	0.35	0.67	0.59	0.09	–	–	–	–		52
					3' - <5'	0.27	0.43	0.44	0.09	–	–	–	–		52
					5' - 10'	0.27	0.32	0.35	0.09	–	–	–	–		43
					15'	0.38	0.43	0.44	0.09	–	–	–	–		39
					20'	0.50	0.57	0.59	0.09	–	–	–	–		39
	7	7.5	7		25'	0.60	0.72	0.70	0.09	–	–	–	–		38
	8	8	7		30'	0.67	0.78	0.79	0.09	–	–	–	–		38

TABLE 2B - STANDARD PRECAST BOX CULVERT DESIGNS (2" COVER) - 5' & 6' SPANS

SPAN x RISE (S) (R) (Ft.)	SLAB / WALL THICKNESS TOP (Tt) (in.)	BOT. (Tb) (in.)	SIDE (Tw) (in.)	HAUNCH (H) (in.)	DESIGN EARTH COVER ABOVE TOP SLAB	REINFORCEMENT AREAS (sq. in./Ft.) As1	As2	As3	As4	As5	As6	As7	As8	As9	As1 EXT. LENGTH (M) (in.)
5' x 3'	8	8	8	4 to 8	0.33' - <2'	0.26	0.39	0.36	0.20	0.20	0.20	0.20	0.26	See General Note 5	–
					2' - <3'	0.26	0.39	0.36	0.10	–	–	–	–		45
					3' - <5'	0.16	0.23	0.24	0.10	–	–	–	–		36
					5' - 10'	0.13	0.20	0.20	0.10	–	–	–	–		36
					15'	0.19	0.21	0.22	0.10	–	–	–	–		35
					20'	0.24	0.28	0.28	0.10	–	–	–	–		35
					25'	0.30	0.34	0.35	0.10	–	–	–	–		35
					30'	0.36	0.41	0.41	0.10	–	–	–	–		35
5' x 4'	8	8	8	4 to 8	0.33' - <2'	0.25	0.42	0.38	0.20	0.20	0.20	0.20	0.25		–
					2' - <3'	0.25	0.42	0.38	0.10	–	–	–	–		45
					3' - <5'	0.16	0.25	0.25	0.10	–	–	–	–		45
					5' - 10'	0.13	0.20	0.20	0.10	–	–	–	–		36
					15'	0.19	0.23	0.24	0.10	–	–	–	–		35
					20'	0.24	0.30	0.31	0.10	–	–	–	–		35
					25'	0.30	0.37	0.38	0.10	–	–	–	–		35
					30'	0.35	0.45	0.46	0.10	–	–	–	–		35
5' x 5'	8	8	8	4 to 8	0.33' - <2'	0.25	0.44	0.41	0.20	0.20	0.20	0.20	0.25		–
					2' - <3'	0.25	0.44	0.41	0.10	–	–	–	–		45
					3' - <5'	0.16	0.26	0.27	0.10	–	–	–	–		45
					5' - 10'	0.15	0.20	0.22	0.10	–	–	–	–		45
					15'	0.20	0.25	0.26	0.10	–	–	–	–		36
					20'	0.26	0.32	0.33	0.10	–	–	–	–		35
					25'	0.32	0.40	0.41	0.10	–	–	–	–		35
					30'	0.37	0.48	0.49	0.10	–	–	–	–		35
6' x 3'	8	8	8	4 to 12	0.33' - <2'	0.32	0.47	0.41	0.20	0.20	0.20	0.25	0.32		–
					2' - <3'	0.32	0.47	0.41	0.10	–	–	–	–		43
					3' - <5'	0.23	0.30	0.31	0.10	–	–	–	–		39
					5' - 10'	0.19	0.22	0.24	0.10	–	–	–	–		39
					15'	0.28	0.29	0.29	0.10	–	–	–	–		38
					20'	0.36	0.38	0.38	0.10	–	–	–	–		38
					25'	0.45	0.47	0.47	0.10	–	–	–	–		38
					30'	0.54	0.57	0.57	0.10	–	–	–	–		38
6' x 4'	8	8	8	4 to 12	0.33' - <2'	0.31	0.50	0.44	0.20	0.21	0.20	0.23	0.31		–
					2' - <3'	0.31	0.50	0.44	0.10	–	–	–	–		43
					3' - <5'	0.23	0.32	0.34	0.10	–	–	–	–		39
					5' - 10'	0.19	0.24	0.26	0.10	–	–	–	–		39
					15'	0.27	0.31	0.32	0.10	–	–	–	–		38
					20'	0.35	0.41	0.41	0.10	–	–	–	–		38
					25'	0.43	0.51	0.51	0.10	–	–	–	–		38
					30'	0.52	0.62	0.62	0.10	–	–	–	–		38
6' x 5'	8	8	8	4 to 12	0.33' - <2'	0.30	0.52	0.47	0.20	0.22	0.20	0.22	0.30		–
					2' - <3'	0.30	0.52	0.47	0.10	–	–	–	–		43
					3' - <5'	0.22	0.34	0.36	0.10	–	–	–	–		43
					5' - 10'	0.20	0.26	0.28	0.10	–	–	–	–		39
					15'	0.27	0.33	0.34	0.10	–	–	–	–		38
					20'	0.36	0.44	0.45	0.10	–	–	–	–		38
					25'	0.44	0.55	0.55	0.10	–	–	–	–		38
					30'	0.52	0.66	0.67	0.10	–	–	–	–		38
6' x 6'	8	8	8	4 to 12	0.33' - <2'	0.30	0.54	0.50	0.20	0.22	0.20	0.22	0.30		–
					2' - <3'	0.30	0.54	0.50	0.10	–	–	–	–		52
					3' - <5'	0.23	0.36	0.38	0.10	–	–	–	–		52
					5' - 10'	0.21	0.27	0.30	0.10	–	–	–	–		43
					15'	0.29	0.35	0.37	0.10	–	–	–	–		39
					20'	0.38	0.47	0.48	0.10	–	–	–	–		39
					25'	0.47	0.59	0.60	0.10	–	–	–	–		38
					30'	0.55	0.70	0.71	0.10	–	–	–	–		38

6/28/2012 1:56:06 PM rd960rh C:\d\projects\standards\structures\2013book\00292-03of14.dgn

TABLE 3 - STANDARD PRECAST BOX CULVERT DESIGNS (2" COVER) - 7' SPANS

SPAN x RISE (S) (R) (Ft.)	SLAB / WALL THICKNESS TOP (Tt) (in.)	BOT. (Tb) (in.)	SIDE (Tw) (in.)	HAUNCH (H) (in.)	DESIGN EARTH COVER ABOVE TOP SLAB	REINFORCEMENT AREAS (sq. in./Ft.) As1	As2	As3	As4	As5	As6	As7	As8	As9	As1 EXT. LENGTH (M) (in.)
7' x 4'	8	8	8	4 to 12	0.33' - <2'	0.37	0.58	0.49	0.20	0.22	0.20	0.29	0.37	See General Note 5	–
					2' - <3'	0.37	0.58	0.49	0.10	–	–	–	–		43
					3' - <5'	0.30	0.40	0.42	0.10	–	–	–	–		43
					5' - 10'	0.26	0.30	0.33	0.10	–	–	–	–		43
					15'	0.37	0.40	0.40	0.10	–	–	–	–		41
					20'	0.49	0.53	0.53	0.10	–	–	–	–		41
	8	8	8	7 to 12	25'	0.60	0.67	0.66	0.10	–	–	–	–		41
	8.5	8.5	8		30'	0.68	0.79	0.78	0.10	–	–	–	–		41
7' x 5'	8	8	8	4 to 12	0.33' - <2'	0.36	0.60	0.53	0.20	0.23	0.20	0.28	0.36		–
					2' - <3'	0.36	0.60	0.53	0.10	–	–	–	–		47
					3' - <5'	0.30	0.42	0.45	0.10	–	–	–	–		43
					5' - 10'	0.26	0.32	0.35	0.10	–	–	–	–		43
					15'	0.37	0.43	0.44	0.10	–	–	–	–		41
					20'	0.48	0.57	0.57	0.10	–	–	–	–		41
	8	8	8	7 to 12	25'	0.60	0.72	0.72	0.10	–	–	–	–		41
	8.5	8.5	8		30'	0.67	0.84	0.84	0.10	–	–	–	–		41
7' x 6'	8	8	8	4 to 12	0.33' - <2'	0.36	0.63	0.56	0.20	0.24	0.20	0.27	0.36		–
					2' - <3'	0.36	0.63	0.56	0.10	–	–	–	–		59
					3' - <5'	0.29	0.44	0.47	0.10	–	–	–	–		47
					5' - 10'	0.27	0.34	0.37	0.10	–	–	–	–		43
					15'	0.38	0.46	0.46	0.10	–	–	–	–		41
					20'	0.49	0.60	0.61	0.10	–	–	–	–		41
	8	8	8	7 to 12	25'	0.61	0.76	0.76	0.10	–	–	–	–		41
	8.5	8.5	8		30'	0.69	0.89	0.89	0.10	–	–	–	–		41
7' x 7'	8	8	8	4 to 12	0.33' - <2'	0.36	0.65	0.58	0.20	0.25	0.20	0.27	0.36		–
					2' - <3'	0.36	0.65	0.58	0.10	–	–	–	–		59
					3' - <5'	0.30	0.46	0.50	0.10	–	–	–	–		59
					5' - 10'	0.30	0.35	0.50	0.10	–	–	–	–		47
					15'	0.41	0.48	0.50	0.10	–	–	–	–		43
					20'	0.53	0.64	0.65	0.10	–	–	–	–		43
	8	8	8	7 to 12	25'	0.65	0.80	0.81	0.10	–	–	–	–		43
	8.5	9	8		30'	0.72	0.92	0.91	0.10	–	–	–	–		41

TABLE 4 - STANDARD PRECAST BOX CULVERT DESIGNS (2" COVER) - 8' SPANS

SPAN x RISE (S) (R) (Ft.)	SLAB / WALL THICKNESS TOP (Tt) (in.)	BOT. (Tb) (in.)	SIDE (Tw) (in.)	HAUNCH (H) (in.)	DESIGN EARTH COVER ABOVE TOP SLAB	REINFORCEMENT AREAS (sq. in./Ft.) As1	As2	As3	As4	As5	As6	As7	As8	As9	As1 EXT. LENGTH (M) (in.)
8' x 4'	9	8.5	8	4 to 12	0.33' - <2'	0.40	0.60	0.52	0.20	0.22	0.22	0.28	0.39	See General Note 5	–
	8	8	8		2' - <3'	0.45	0.66	0.54	0.10	–	–	–	–		50
					3' - <5'	0.39	0.48	0.50	0.10	–	–	–	–		50
					5' - 10'	0.34	0.38	0.40	0.10	–	–	–	–		45
					15'	0.49	0.51	0.50	0.10	–	–	–	–		41
					20'	0.65	0.68	0.66	0.10	–	–	–	–		41
	8.5	8.5	8	8 to 12	25'	0.76	0.83	0.80	0.10	–	–	–	–		41
	9.5	9.5	8		30'	0.79	0.94	0.92	0.10	–	–	–	–		41
8' x 5'	9	8.5	8	4 to 12	0.33' - <2'	0.38	0.65	0.59	0.20	0.22	0.22	0.30	0.37		–
	8	8	8		2' - <3'	0.43	0.69	0.58	0.10	–	–	–	–		50
					3' - <5'	0.37	0.51	0.53	0.10	–	–	–	–		45
					5' - 10'	0.33	0.41	0.42	0.10	–	–	–	–		45
					15'	0.48	0.54	0.53	0.10	–	–	–	–		41
					20'	0.63	0.73	0.70	0.10	–	–	–	–		41
	8.5	8.5	8	8 to 12	25'	0.74	0.88	0.86	0.10	–	–	–	–		41
	9.5	9.5	8		30'	0.77	1.00	0.98	0.10	–	–	–	–		41
8' x 6'	9	9	8	4 to 12	0.33' - <2'	0.32	0.65	0.58	0.20	0.23	0.22	0.25	0.31		–
	8	8	8		2' - <3'	0.42	0.71	0.61	0.10	–	–	–	–		50
					3' - <5'	0.37	0.54	0.56	0.10	–	–	–	–		50
					5' - 10'	0.34	0.43	0.45	0.10	–	–	–	–		45
					15'	0.49	0.57	0.57	0.10	–	–	–	–		41
					20'	0.64	0.77	0.76	0.10	–	–	–	–		41
	8.5	8.5	8	8 to 12	25'	0.74	0.94	0.92	0.10	–	–	–	–		41
	9.5	9.5	8		30'	0.78	1.05	1.04	0.10	–	–	–	–		41
8' x 7'	9	9	8	4 to 12	0.33' - <2'	0.31	0.67	0.60	0.20	0.24	0.22	0.24	0.31		–
	8	8	8		2' - <3'	0.42	0.74	0.64	0.10	–	–	–	–		55
					3' - <5'	0.37	0.56	0.59	0.10	–	–	–	–		55
					5' - 10'	0.36	0.45	0.47	0.10	–	–	–	–		50
					15'	0.51	0.61	0.61	0.10	–	–	–	–		45
					20'	0.66	0.81	0.80	0.10	–	–	–	–		41
	8.5	8.5	8	8 to 12	25'	0.78	0.98	0.97	0.10	–	–	–	–		41
	9.5	9.5	8		30'	0.84	1.10	1.09	0.10	–	–	–	–		41
8' x 8'	9	9	8	4 to 12	0.33' - <2'	0.32	0.68	0.62	0.20	0.24	0.22	0.25	0.32		–
	8	8	8		2' - <3'	0.43	0.76	0.67	0.14	–	–	–	–		65
					3' - <5'	0.38	0.58	0.61	0.14	–	–	–	–		65
					5' - 10'	0.39	0.46	0.50	0.13	–	–	–	–		55
					15'	0.55	0.64	0.65	0.10	–	–	–	–		45
					20'	0.71	0.86	0.85	0.10	–	–	–	–		45
	8.5	8.5	8	8 to 12	25'	0.84	1.03	1.02	0.10	–	–	–	–		41
	9.5	9.5	8		30'	0.93	1.15	1.15	0.10	–	–	–	–		41

NOTES:
1. See Sheet 1 for Reinforcing Details and dimension locations.
2. See Sheet 2 for General Notes.
3. See Sheet 14 for Welded Wire Reinforcement Bending Diagram.

6/28/2012 1:56:09 PM rd960rh C:\d\projects\standards\structures\2013book\00292-04of14.dgn

TABLE 5 - STANDARD PRECAST BOX CULVERT DESIGNS (2" COVER) - 9' SPANS

SPAN x RISE (S) (R) (Ft.)	SLAB / WALL THICKNESS TOP (Tt) (in.)	BOT. (Tb) (in.)	SIDE (Tw) (in.)	HAUNCH (H) (in.)	DESIGN EARTH COVER ABOVE TOP SLAB	REINFORCEMENT AREAS (sq. in./Ft.) As1	As2	As3	As4	As5	As6	As7	As8	As9	As1 EXT. LENGTH (M) (in.)
9' x 5'	9.5	9.5	9	4	0.33' - <2'	0.41	0.62	0.53	0.22	0.23	0.23	0.34	0.38	See General Note 5	–
	9	9	9	to 12	2' - <3'	0.44	0.65	0.54	0.11	–	–	–	–		54
					3' - <5'	0.39	0.53	0.51	0.11	–	–	–	–		49
					5' - 10'	0.35	0.42	0.44	0.11	–	–	–	–		49
					15'	0.50	0.56	0.55	0.11	–	–	–	–		44
					20'	0.65	0.75	0.73	0.11	–	–	–	–		44
	9.5	9.5	9	8 to 12	25'	0.77	0.92	0.90	0.11	–	–	–	–		44
	10.5	11	9		30'	0.81	1.05	1.02	0.11	–	–	–	–		44
9' x 6'	9.5	9.5	9	4	0.33' - <2'	0.38	0.64	0.56	0.23	0.23	0.23	0.33	0.37		–
	9	9	9	to 12	2' - <3'	0.43	0.67	0.57	0.11	–	–	–	–		54
					3' - <5'	0.37	0.55	0.54	0.11	–	–	–	–		49
					5' - 10'	0.35	0.45	0.47	0.11	–	–	–	–		49
					15'	0.49	0.60	0.59	0.11	–	–	–	–		44
					20'	0.65	0.80	0.78	0.11	–	–	–	–		44
	9.5	9.5	9	8 to 12	25'	0.76	0.98	0.95	0.11	–	–	–	–		44
	10.5	11	9		30'	0.80	1.10	1.08	0.11	–	–	–	–		44
9' x 7'	9.5	9.5	9	4	0.33' - <2'	0.37	0.67	0.59	0.22	0.23	0.23	0.32	0.37		–
	9	9	9	to 12	2' - <3'	0.42	0.69	0.60	0.11	–	–	–	–		59
					3' - <5'	0.37	0.58	0.56	0.11	–	–	–	–		54
					5' - 10'	0.36	0.47	0.49	0.11	–	–	–	–		49
					15'	0.50	0.63	0.63	0.11	–	–	–	–		44
					20'	0.66	0.84	0.80	0.11	–	–	–	–		44
	9.5	9.5	9	8 to 12	25'	0.77	1.02	1.00	0.11	–	–	–	–		44
	10.5	11	9		30'	0.81	1.15	1.13	0.11	–	–	–	–		44
9' x 8'	9.5	9.5	9	4	0.33' - <2'	0.37	0.68	0.61	0.22	0.23	0.23	0.31	0.37		–
	9	9	9	to 12	2' - <3'	0.42	0.71	0.62	0.11	–	–	–	–		59
					3' - <5'	0.37	0.60	0.59	0.11	–	–	–	–		59
					5' - 10'	0.38	0.49	0.51	0.11	–	–	–	–		54
					15'	0.53	0.66	0.66	0.11	–	–	–	–		44
					20'	0.68	0.88	0.87	0.11	–	–	–	–		44
	9.5	9.5	9	8 to 12	25'	0.81	1.07	1.05	0.11	–	–	–	–		44
	10.5	11	9		30'	0.86	1.20	1.18	0.11	–	–	–	–		44
9' x 9'	9.5	9.5	9	4	0.33' - <2'	0.38	0.70	0.63	0.22	0.23	0.23	0.32	0.38		–
	9	9	9	to 12	2' - <3'	0.43	0.73	0.65	0.15	–	–	–	–		72
					3' - <5'	0.38	0.62	0.61	0.15	–	–	–	–		72
					5' - 10'	0.41	0.50	0.53	0.14	–	–	–	–		59
					15'	0.57	0.69	0.70	0.12	–	–	–	–		49
					20'	0.73	0.92	0.91	0.11	–	–	–	–		49
	9.5	10	9	8 to 12	25'	0.83	1.11	1.09	0.11	–	–	–	–		44
	10.5	11	9		30'	0.93	1.25	1.23	0.11	–	–	–	–		44

TABLE 6 - STANDARD PRECAST BOX CULVERT DESIGNS (2" COVER) - 10' SPANS

SPAN x RISE (S) (R) (Ft.)	SLAB / WALL THICKNESS TOP (Tt) (in.)	BOT. (Tb) (in.)	SIDE (Tw) (in.)	HAUNCH (H) (in.)	DESIGN EARTH COVER ABOVE TOP SLAB	REINFORCEMENT AREAS (sq. in./Ft.) As1	As2	As3	As4	As5	As6	As7	As8	As9	As1 EXT. LENGTH (M) (in.)
10' x 5'	10	10	10	4	0.33' - <2'	0.46	0.62	0.52	0.24	0.24	0.24	0.41	0.45	See General Note 5	–
				to 12	2' - <3'	0.46	0.62	0.52	0.12	–	–	–	–		58
					3' - <5'	0.42	0.54	0.50	0.12	–	–	–	–		53
					5' - 10'	0.38	0.46	0.49	0.12	–	–	–	–		52
					15'	0.52	0.59	0.58	0.12	–	–	–	–		47
					20'	0.69	0.78	0.76	0.12	–	–	–	–		47
	10.5	10.5	10	8 to 12	25'	0.81	0.97	0.93	0.12	–	–	–	–		47
	11.5	12	10		30'	0.87	1.11	1.11	0.12	–	–	–	–		47
10' x 6'	10	10	10	4	0.33' - <2'	0.44	0.64	0.54	0.24	0.24	0.24	0.39	0.44		–
				to 12	2' - <3'	0.44	0.64	0.54	0.12	–	–	–	–		58
					3' - <5'	0.39	0.57	0.52	0.12	–	–	–	–		52
					5' - 10'	0.37	0.48	0.52	0.12	–	–	–	–		52
					15'	0.51	0.62	0.61	0.12	–	–	–	–		47
					20'	0.67	0.83	0.80	0.12	–	–	–	–		47
	10.5	10.5	10	8 to 12	25'	0.79	1.02	0.99	0.12	–	–	–	–		47
	11.5	12	10		30'	0.85	1.17	1.14	0.12	–	–	–	–		47
10' x 7'	10	10	10	4	0.33' - <2'	0.43	0.66	0.57	0.24	0.24	0.24	0.38	0.43		–
				to 12	2' - <3'	0.43	0.66	0.57	0.12	–	–	–	–		58
					3' - <5'	0.38	0.59	0.55	0.12	–	–	–	–		58
					5' - 10'	0.37	0.50	0.54	0.12	–	–	–	–		52
					15'	0.52	0.66	0.65	0.12	–	–	–	–		47
					20'	0.67	0.87	0.85	0.12	–	–	–	–		47
	10.5	10.5	10	8 to 12	25'	0.79	1.07	1.04	0.12	–	–	–	–		47
	11.5	12	10		30'	0.84	1.22	1.19	0.12	–	–	–	–		47
10' x 8'	10	10	10	4	0.33' - <2'	0.43	0.68	0.60	0.24	0.24	0.24	0.38	0.43		–
				to 12	2' - <3'	0.43	0.68	0.60	0.12	–	–	–	–		64
					3' - <5'	0.38	0.62	0.57	0.12	–	–	–	–		58
					5' - 10'	0.38	0.52	0.57	0.12	–	–	–	–		52
					15'	0.53	0.69	0.68	0.12	–	–	–	–		47
					20'	0.68	0.91	0.89	0.12	–	–	–	–		47
	10.5	10.5	10	8 to 12	25'	0.81	1.12	1.09	0.12	–	–	–	–		47
	11.5	12	10		30'	0.86	1.27	1.25	0.12	–	–	–	–		47
10' x 9'	10	10	10	4	0.33' - <2'	0.43	0.70	0.62	0.24	0.24	0.24	0.38	0.43		–
				to 12	2' - <3'	0.43	0.70	0.62	0.12	–	–	–	–		70
					3' - <5'	0.39	0.64	0.60	0.12	–	–	–	–		64
					5' - 10'	0.40	0.54	0.59	0.12	–	–	–	–		58
					15'	0.56	0.72	0.72	0.12	–	–	–	–		52
					20'	0.71	0.95	0.94	0.12	–	–	–	–		47
	10.5	11	10	8 to 12	25'	0.82	1.15	1.13	0.12	–	–	–	–		47
	11.5	12	10		30'	0.90	1.32	1.30	0.12	–	–	–	–		47
10' x 10'	10	10	10	4	0.33' - <2'	0.44	0.71	0.64	0.24	0.24	0.24	0.38	0.44		–
				to 12	2' - <3'	0.44	0.71	0.64	0.17	–	–	–	–		79
					3' - <5'	0.40	0.65	0.62	0.16	–	–	–	–		70
					5' - 10'	0.44	0.56	0.61	0.15	–	–	–	–		64
					15'	0.60	0.75	0.76	0.12	–	–	–	–		52
					20'	0.76	0.99	0.99	0.12	–	–	–	–		52
	10.5	11	10	8 to 12	25'	0.86	1.20	1.18	0.12	–	–	–	–		47
	11.5	12	10		30'	0.97	1.36	1.35	0.13	–	–	–	–		47

NOTES:
1. See Sheet 1 for Reinforcing Details and dimension locations.
2. See Sheet 2 for General Notes.
3. See Sheet 14 for WWR Bending Diagram.

6/28/2012 1:56:11 PM rd960rh C:\d\projects\standards\structures\2013book\00292-05of14.dgn

TABLE 7 - STANDARD PRECAST BOX CULVERT DESIGNS (2" COVER) - 11' SPANS

SPAN x RISE (S) (R) (Ft.)	SLAB / WALL THICKNESS TOP (Tt) (in.)	BOT. (Tb) (in.)	SIDE (Tw) (in.)	HAUNCH (H) (in.)	DESIGN EARTH COVER ABOVE TOP SLAB	REINFORCEMENT AREAS (sq. in./Ft.) As1	As2	As3	As4	As5	As6	As7	As8	As9	As1 EXT. LENGTH (M) (in.)
11' x 4'	11	11	11	4 to 12	0.33' - <2'	0.51	0.57	0.47	0.27	0.27	0.27	0.45	0.48	See General Note 5	–
					2' - <3'	0.51	0.57	0.47	0.14	–	–	–	–		62
					3' - <5'	0.48	0.57	0.46	0.14	–	–	–	–		62
					5' - 10'	0.47	0.50	0.50	0.14	–	–	–	–		55
					15'	0.59	0.58	0.56	0.14	–	–	–	–		55
					20'	0.77	0.77	0.74	0.14	–	–	–	–		55
	11.5	11.5	11	8 to 12	25'	0.92	0.95	0.91	0.14	–	–	–	–		55
	13	13	11		30'	0.94	1.09	1.06	0.14	–	–	–	–		55
11' x 6'	11	11	11	4 to 12	0.33' - <2'	0.45	0.62	0.52	0.27	0.27	0.27	0.41	0.45		–
					2' - <3'	0.45	0.62	0.52	0.14	–	–	–	–		62
					3' - <5'	0.42	0.58	0.51	0.14	–	–	–	–		55
					5' - 10'	0.43	0.56	0.56	0.14	–	–	–	–		55
					15'	0.54	0.65	0.64	0.14	–	–	–	–		50
					20'	0.70	0.86	0.83	0.14	–	–	–	–		50
	11.5	11.5	11	8 to 12	25'	0.83	1.07	1.03	0.14	–	–	–	–		50
	13	13	11		30'	0.85	1.22	1.19	0.14	–	–	–	–		50
11' x 8'	11	11	11	4 to 12	0.33' - <2'	0.42	0.67	0.57	0.27	0.27	0.27	0.39	0.43		–
					2' - <3'	0.43	0.67	0.57	0.14	–	–	–	–		62
					3' - <5'	0.39	0.63	0.56	0.14	–	–	–	–		62
					5' - 10'	0.43	0.60	0.61	0.14	–	–	–	–		55
					15'	0.54	0.72	0.71	0.14	–	–	–	–		50
					20'	0.70	0.94	0.92	0.14	–	–	–	–		50
	11.5	11.5	11	8 to 12	25'	0.82	1.16	1.13	0.14	–	–	–	–		50
	13	13	11		30'	0.86	1.32	1.30	0.14	–	–	–	–		50
11' x 10'	11	11	11	4 to 12	0.33' - <2'	0.44	0.71	0.62	0.27	0.27	0.27	0.38	0.44		–
					2' - <3'	0.44	0.71	0.62	0.14	–	–	–	–		75
					3' - <5'	0.41	0.67	0.61	0.14	–	–	–	–		69
					5' - 10'	0.47	0.64	0.66	0.14	–	–	–	–		62
					15'	0.59	0.78	0.78	0.14	–	–	–	–		55
					20'	0.75	1.03	1.01	0.14	–	–	–	–		50
	11.5	12	11	8 to 12	25'	0.85	1.24	1.22	0.14	–	–	–	–		50
	13	13.5	11		30'	0.91	1.40	1.39	0.14	–	–	–	–		50
11' x 11'	11	11	11	4 to 12	0.33' - <2'	0.45	0.72	0.64	0.27	0.27	0.27	0.39	0.45		–
					2' - <3'	0.45	0.72	0.64	0.18	–	–	–	–		86
					3' - <5'	0.42	0.69	0.63	0.18	–	–	–	–		75
					5' - 10'	0.51	0.66	0.69	0.16	–	–	–	–		69
					15'	0.63	0.81	0.82	0.14	–	–	–	–		55
					20'	0.80	1.07	1.06	0.14	–	–	–	–		55
	11.5	12	11	8 to 12	25'	0.91	1.29	1.27	0.14	–	–	–	–		50
	13	13.5	11		30'	0.99	1.44	1.44	0.14	–	–	–	–		50

TABLE 8 - STANDARD PRECAST BOX CULVERT DESIGNS (2" COVER) - 12' SPANS

SPAN x RISE (S) (R) (Ft.)	SLAB / WALL THICKNESS TOP (Tt) (in.)	BOT. (Tb) (in.)	SIDE (Tw) (in.)	HAUNCH (H) (in.)	DESIGN EARTH COVER ABOVE TOP SLAB	REINFORCEMENT AREAS (sq. in./Ft.) As1	As2	As3	As4	As5	As6	As7	As8	As9	As1 EXT. LENGTH (M) (in.)
12' x 4'	12	12	12	4 to 12	0.33' - <2'	0.52	0.57	0.45	0.29	0.29	0.29	0.47	0.49	See General Note 5	–
					2' - <3'	0.52	0.57	0.45	0.15	–	–	–	–		73
					3' - <5'	0.50	0.54	0.45	0.15	–	–	–	–		66
					5' - 10'	0.50	0.52	0.52	0.15	–	–	–	–		66
					15'	0.63	0.61	0.59	0.15	–	–	–	–		59
					20'	0.82	0.81	0.77	0.15	–	–	–	–		59
	12.5	12.5	12	8 to 12	25'	0.99	0.99	0.95	0.15	–	–	–	–		59
	14	14	12		30'	1.03	1.15	1.11	0.15	–	–	–	–		59
12' x 6'	12	12	12	4 to 12	0.33' - <2'	0.47	0.62	0.51	0.29	0.29	0.29	0.42	0.46		–
					2' - <3'	0.47	0.62	0.51	0.15	–	–	–	–		66
					3' - <5'	0.45	0.60	0.51	0.15	–	–	–	–		59
					5' - 10'	0.47	0.59	0.59	0.15	–	–	–	–		59
					15'	0.57	0.68	0.66	0.15	–	–	–	–		53
					20'	0.74	0.90	0.86	0.15	–	–	–	–		53
	12.5	12.5	12	8 to 12	25'	0.88	1.11	1.06	0.15	–	–	–	–		53
	14	14.5	12		30'	0.92	1.27	1.24	0.15	–	–	–	–		53
12' x 8'	12	12	12	4 to 12	0.33' - <2'	0.44	0.67	0.56	0.29	0.29	0.29	0.40	0.44		–
					2' - <3'	0.44	0.67	0.56	0.15	–	–	–	–		66
					3' - <5'	0.41	0.64	0.56	0.15	–	–	–	–		59
					5' - 10'	0.45	0.63	0.64	0.15	–	–	–	–		59
					15'	0.56	0.75	0.73	0.15	–	–	–	–		53
					20'	0.72	0.98	0.95	0.15	–	–	–	–		53
	12.5	13	12	8 to 12	25'	0.85	1.20	1.16	0.15	–	–	–	–		53
	14	14.5	12		30'	0.89	1.38	1.35	0.15	–	–	–	–		53
12' x 10'	12	12	12	4 to 12	0.33' - <2'	0.44	0.71	0.60	0.29	0.29	0.29	0.39	0.44		–
					2' - <3'	0.44	0.71	0.60	0.15	–	–	–	–		73
					3' - <5'	0.42	0.68	0.60	0.15	–	–	–	–		66
					5' - 10'	0.47	0.67	0.69	0.15	–	–	–	–		59
					15'	0.59	0.81	0.81	0.15	–	–	–	–		53
					20'	0.75	1.06	1.04	0.15	–	–	–	–		53
	12.5	13	12	8 to 12	25'	0.87	1.30	1.26	0.15	–	–	–	–		53
	14	14.5	12		30'	0.92	1.47	1.45	0.15	–	–	–	–		53
12' x 12'	12	12	12	4 to 12	0.33' - <2'	0.46	0.74	0.64	0.29	0.29	0.29	0.40	0.46		–
					2' - <3'	0.46	0.74	0.64	0.20	–	–	–	–		93
					3' - <5'	0.42	0.72	0.64	0.20	–	–	–	–		80
					5' - 10'	0.54	0.71	0.74	0.18	–	–	–	–		73
					15'	0.66	0.87	0.89	0.15	–	–	–	–		59
					20'	0.83	1.14	1.13	0.15	–	–	–	–		59
	12.5	13	12	8 to 12	25'	0.96	1.39	1.37	0.15	–	–	–	–		53
	14	14.5	12.5		30'	1.05	1.56	1.56	0.15	–	–	–	–		53

NOTES:

1. See Sheet 1 for Reinforcing Details and dimension locations.
2. See Sheet 2 for General Notes.
3. See Sheet 14 for Welded Wire Reinforcement Bending Diagram.

6/28/2012 1:56:13 PM rd960rh C:\d\projects\standards\structures\2013book\00292-06of14.dgn

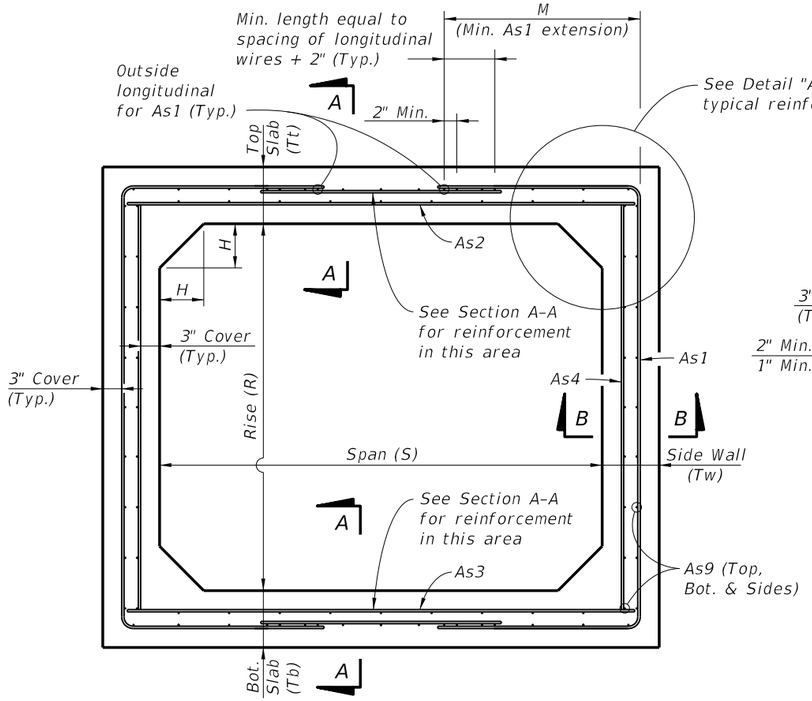

TYPICAL BOX SECTION (TYPE 2)
DESIGN EARTH COVER 2' OR GREATER
(Option 1 Reinforcing Configuration Shown)

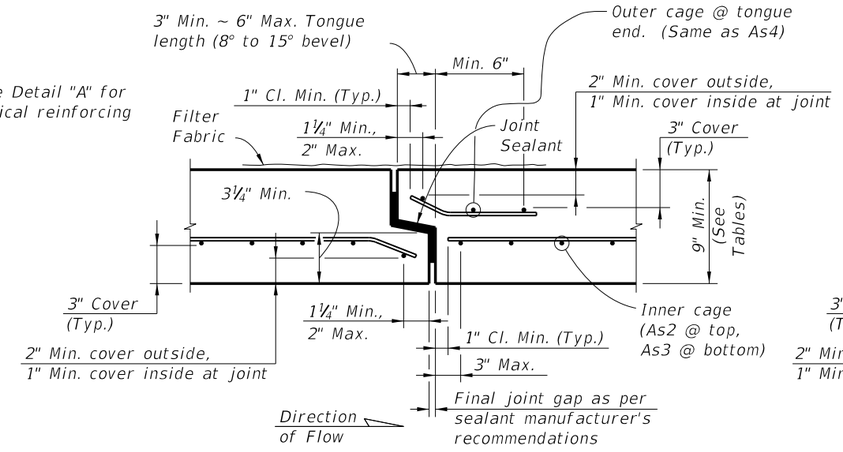

SECTION A-A

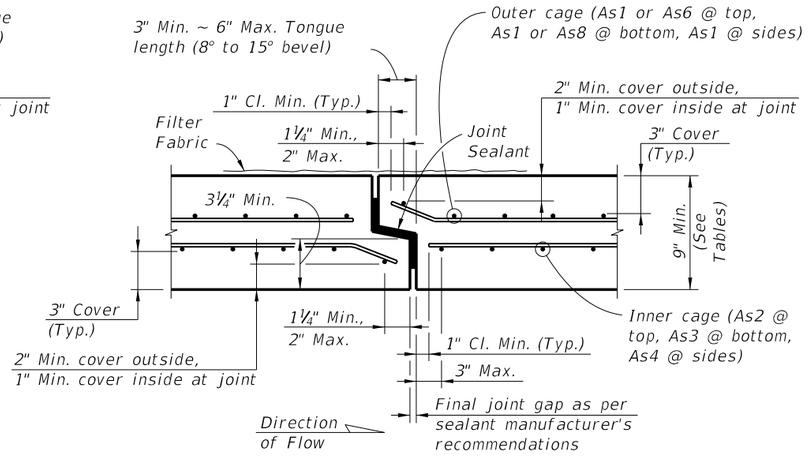

SECTION B-B
TYPICAL SECTION THRU JOINT

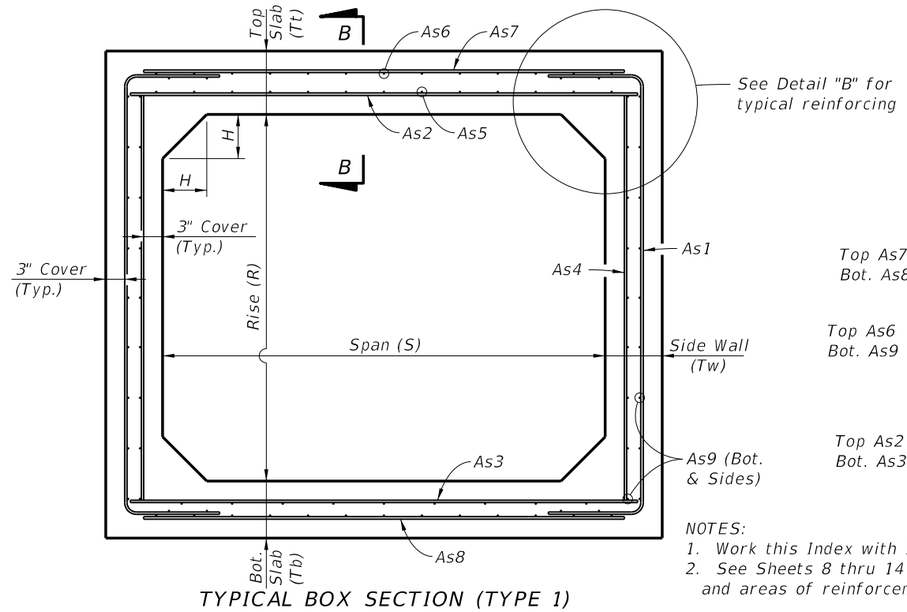

TYPICAL BOX SECTION (TYPE 1)
DESIGN EARTH COVER LESS THAN 2'
(Option 1 Reinforcing Configuration Shown)

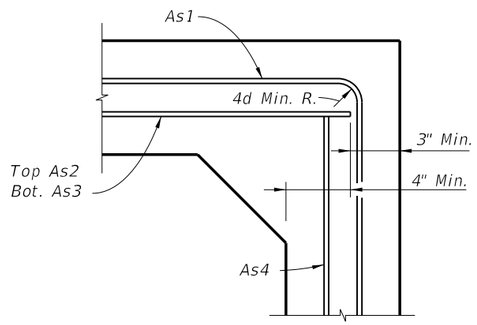

DETAIL "A"
(OPTION 1)

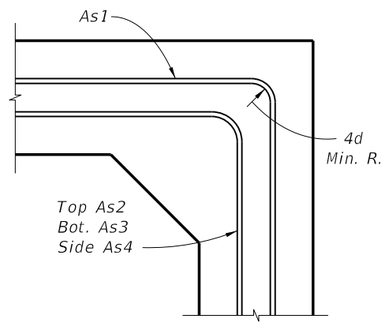

DETAIL "A"
(OPTION 2)

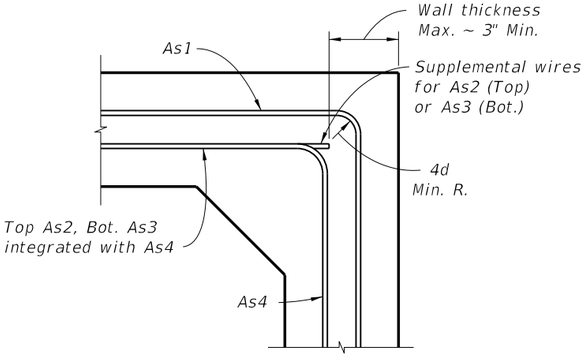

DETAIL "A"
(OPTION 3)

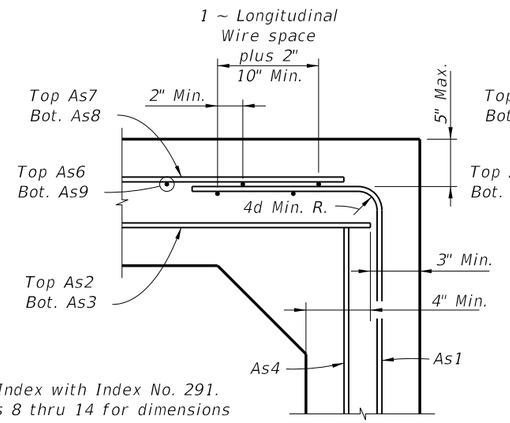

DETAIL "B"
(OPTION 1)

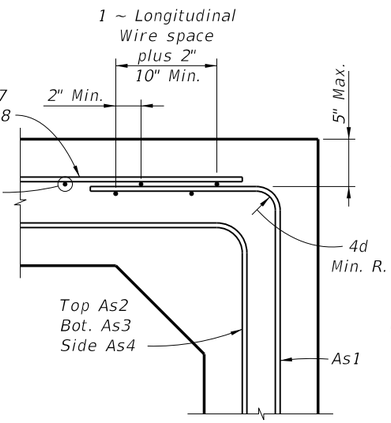

DETAIL "B"
(OPTION 2)

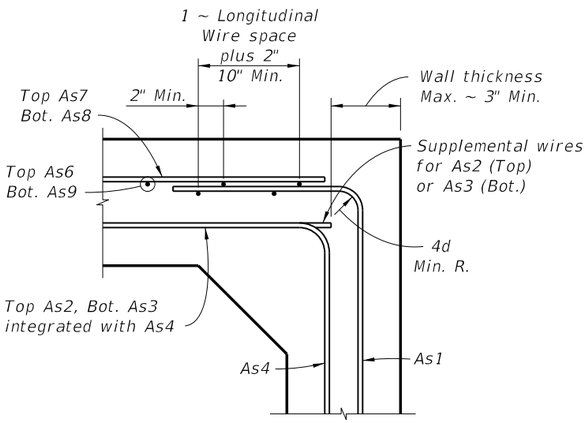

DETAIL "B"
(OPTION 3)

NOTES:
1. Work this Index with Index No. 291.
2. See Sheets 8 thru 14 for dimensions and areas of reinforcement.

STANDARD PRECAST BOX CULVERT WITH 3" CONCRETE COVER

LAST REVISION	REVISION	DESCRIPTION:			INDEX NO.	SHEET NO.
01/01/12			FDOT DESIGN STANDARDS 2013	STANDARD PRECAST CONCRETE BOX CULVERTS	292	7

C:\d\projects\standards\structures\2013book\00292-07of14.dgn rd960rh 1:56:16 PM 6/28/2012

TABLE 9A - STANDARD PRECAST BOX CULVERT DESIGNS (3" COVER) - 3' & 4' SPANS

SPAN x RISE (S) (R) (Ft.)	SLAB / WALL THICKNESS TOP (Tt) (in.)	BOT. (Tb) (in.)	SIDE (Tw) (in.)	HAUNCH (H) (in.)	DESIGN EARTH COVER ABOVE TOP SLAB	REINFORCEMENT AREAS (sq. in./Ft.) As1	As2	As3	As4	As5	As6	As7	As8	As9	As1 EXT. LENGTH (M) (in.)
3' x 3'	9	9	9	4 to 8	0.33' - <2'	0.22	0.24	0.22	0.22	0.22	0.22	0.22	0.22	See General Note 5	–
					2' - <3'	0.11	0.23	0.22	0.11	–	–	–	–		31
					3' - <5'	0.11	0.22	0.22	0.11	–	–	–	–		31
					5' - 10'	0.11	0.22	0.22	0.11	–	–	–	–		31
					15'	0.11	0.22	0.22	0.11	–	–	–	–		31
					20'	0.13	0.22	0.22	0.11	–	–	–	–		31
					25'	0.16	0.22	0.22	0.11	–	–	–	–		31
					30'	0.19	0.24	0.25	0.11	–	–	–	–		31
					35'	0.22	0.28	0.29	0.11	–	–	–	–		31
4' x 3'	9	9	9	4 to 8	0.33' - <2'	0.22	0.32	0.24	0.22	0.22	0.22	0.22	0.22		–
					2' - <3'	0.17	0.31	0.24	0.11	–	–	–	–		38
					3' - <5'	0.13	0.22	0.22	0.11	–	–	–	–		38
					5' - 10'	0.13	0.22	0.22	0.11	–	–	–	–		38
					15'	0.17	0.22	0.22	0.11	–	–	–	–		38
					20'	0.23	0.26	0.27	0.11	–	–	–	–		38
					25'	0.28	0.32	0.34	0.11	–	–	–	–		38
					30'	0.33	0.39	0.40	0.11	–	–	–	–		38
4' x 4'	9	9	9	4 to 8	0.33' - <2'	0.22	0.34	0.26	022	0.22	0.22	0.22	0.22		–
					2' - <3'	0.17	0.33	0.26	0.11	–	–	–	–		38
					3' - <5'	0.13	0.22	0.22	0.11	–	–	–	–		38
					5' - 10'	0.14	0.22	0.22	0.11	–	–	–	–		38
					15'	0.19	0.22	0.23	0.11	–	–	–	–		38
					20'	0.24	0.28	0.30	0.11	–	–	–	–		38
					25'	0.29	0.36	0.37	0.11	–	–	–	–		38
					30'	0.34	0.43	0.45	0.11	–	–	–	–		38

TABLE 9B - STANDARD PRECAST BOX CULVERT DESIGNS (3" COVER) - 3' & 4' SPANS

SPAN x RISE (S) (R) (Ft.)	SLAB / WALL THICKNESS TOP (Tt) (in.)	BOT. (Tb) (in.)	SIDE (Tw) (in.)	HAUNCH (H) (in.)	DESIGN EARTH COVER ABOVE TOP SLAB	REINFORCEMENT AREAS (sq. in./Ft.) As1	As2	As3	As4	As5	As6	As7	As8	As9	As1 EXT. LENGTH (M) (in.)
3' x 3'	10	10	10	4 to 8	0.33' - <2'	0.24	0.24	0.24	0.24	0.24	0.24	0.24	0.24	See General Note 5	–
					2' - <3'	0.12	0.24	0.24	0.24	–	–	–	–		31
					3' - <5'	0.12	0.24	0.24	0.24	–	–	–	–		31
					5' - 10'	0.12	0.24	0.24	0.24	–	–	–	–		31
					15'	0.12	0.24	0.24	0.24	–	–	–	–		31
					20'	0.12	0.24	0.24	0.24	–	–	–	–		31
					25'	0.13	0.24	0.24	0.24	–	–	–	–		31
					30'	0.15	0.24	0.24	0.12	–	–	–	–		31
					35'	0.18	0.24	0.24	0.12	–	–	–	–		31
4' x 3'	10	10	10	4 to 8	0.33' - <2'	0.24	0.26	0.24	0.24	0.24	0.24	0.24	0.24		–
					2' - <3'	0.14	0.26	0.24	0.12	–	–	–	–		38
					3' - <5'	0.12	0.24	0.24	0.12	–	–	–	–		38
					5' - 10'	0.12	0.24	0.24	0.12	–	–	–	–		38
					15'	0.14	0.24	0.24	0.12	–	–	–	–		38
					20'	0.18	0.24	0.24	0.12	–	–	–	–		38
					25'	0.22	0.26	0.27	0.12	–	–	–	–		38
					30'	0.26	0.31	0.32	0.12	–	–	–	–		38
4' x 4'	10	10	10	4 to 8	0.33' - <2'	0.24	0.28	0.24	0.24	0.24	0.24	0.24	0.24		–
					2' - <3'	0.14	0.28	0.24	0.12	–	–	–	–		38
					3' - <5'	0.12	0.24	0.24	0.12	–	–	–	–		38
					5' - 10'	0.12	0.24	0.24	0.12	–	–	–	–		38
					15'	0.15	0.24	0.24	0.12	–	–	–	–		38
					20'	0.19	0.24	0.24	0.12	–	–	–	–		38
					25'	0.23	0.28	0.30	0.12	–	–	–	–		38
					30'	0.27	0.34	0.35	0.12	–	–	–	–		38

NOTES:
1. See Sheet 2 for General Notes.
2. See Sheet 7 for Reinforcing Details and dimension locations.
3. See Sheet 14 for WWR Bending Diagrams.

6/28/2012 1:56:20 PM rd960rh C:\d\projects\standards\structures\2013book\00292-08of14.dgn

TABLE 10A - STANDARD PRECAST BOX CULVERT DESIGNS (3" COVER) - 5' & 6' SPANS

SPAN x RISE (S) (R) (Ft.)	SLAB / WALL THICKNESS TOP (Tt) (in.)	BOT. (Tb) (in.)	SIDE (Tw) (in.)	HAUNCH (H) (in.)	DESIGN EARTH COVER ABOVE TOP SLAB	REINFORCEMENT AREAS (sq. in./Ft.) As1	As2	As3	As4	As5	As6	As7	As8	As9	As1 EXT. LENGTH (M) (in.)
5' x 3'	9	9	9	4 to 8	0.33' - <2'	0.27	0.39	0.37	0.22	0.22	0.22	0.22	0.27	See General Note 5	–
					2' - <3'	0.26	0.39	0.37	0.11	–	–	–	–		45
					3' - <5'	0.19	0.24	0.25	0.11	–	–	–	–		36
					5' - 10'	0.20	0.22	0.22	0.11	–	–	–	–		36
					15'	0.28	0.28	0.30	0.11	–	–	–	–		35
					20'	0.37	0.38	0.39	0.11	–	–	–	–		35
					25'	0.45	0.48	0.49	0.11	–	–	–	–		35
					30'	0.54	0.58	0.59	0.11	–	–	–	–		35
5' x 4'	9	9	9	4 to 8	0.33' - <2'	0.26	0.42	0.39	0.22	0.22	0.22	0.22	0.26		–
					2' - <3'	0.26	0.42	0.39	0.11	–	–	–	–		45
					3' - <5'	0.19	0.26	0.27	0.11	–	–	–	–		45
					5' - 10'	0.20	0.22	0.23	0.11	–	–	–	–		36
					15'	0.27	0.31	0.33	0.11	–	–	–	–		35
					20'	0.36	0.42	0.43	0.11	–	–	–	–		35
					25'	0.44	0.52	0.54	0.11	–	–	–	–		35
					30'	0.53	0.63	0.65	0.11	–	–	–	–		35
5' x 5'	9	9	9	4 to 8	0.33' - <2'	0.27	0.44	0.42	0.22	0.22	0.22	0.22	0.27		–
					2' - <3'	0.27	0.44	0.42	0.11	–	–	–	–		45
					3' - <5'	0.20	0.27	0.28	0.11	–	–	–	–		45
					5' - 10'	0.22	0.23	0.26	0.11	–	–	–	–		45
					15'	0.30	0.34	0.36	0.11	–	–	–	–		36
					20'	0.38	0.45	0.47	0.11	–	–	–	–		35
					25'	0.47	0.56	0.59	0.11	–	–	–	–		35
					30'	0.55	0.68	0.71	0.11	–	–	–	–		35
6' x 3'	9	9	9	4 to 12	0.33' - <2'	0.34	0.47	0.42	0.22	0.22	0.22	0.25	0.34		–
					2' - <3'	0.34	0.47	0.42	0.11	–	–	–	–		43
					3' - <5'	0.27	0.31	0.32	0.11	–	–	–	–		39
					5' - 10'	0.29	0.26	0.28	0.11	–	–	–	–		39
					15'	0.42	0.39	0.40	0.11	–	–	–	–		38
					20'	0.55	0.52	0.53	0.11	–	–	–	–		38
					25'	0.68	0.66	0.67	0.11	–	–	–	–		38
					30'	0.82	0.81	0.82	0.11	–	–	–	–		38
6' x 4'	9	9	9	4 to 12	0.33' - <2'	0.33	0.50	0.46	0.22	0.22	0.22	0.23	0.33		–
					2' - <3'	0.33	0.50	0.46	0.11	–	–	–	–		43
					3' - <5'	0.27	0.33	0.35	0.11	–	–	–	–		39
					5' - 10'	0.28	0.29	0.31	0.11	–	–	–	–		39
					15'	0.40	0.43	0.45	0.11	–	–	–	–		38
					20'	0.52	0.57	0.59	0.11	–	–	–	–		38
					25'	0.65	0.73	0.74	0.11	–	–	–	–		38
					30'	0.78	0.88	0.90	0.11	–	–	–	–		38
6' x 5'	9	9	9	4 to 12	0.33' - <2'	0.33	0.52	0.49	0.22	0.22	0.22	0.23	0.33		–
					2' - <3'	0.33	0.52	0.49	0.11	–	–	–	–		43
					3' - <5'	0.27	0.35	0.37	0.11	–	–	–	–		43
					5' - 10'	0.29	0.31	0.34	0.11	–	–	–	–		39
					15'	0.41	0.46	0.49	0.11	–	–	–	–		38
					20'	0.53	0.62	0.64	0.11	–	–	–	–		38
					25'	0.66	0.78	0.80	0.11	–	–	–	–		38
					30'	0.78	0.95	0.97	0.11	–	–	–	–		38
6' x 6'	9	9	9	4 to 12	0.33' - <2'	0.34	0.55	0.51	0.22	0.22	0.22	0.24	0.34		–
					2' - <3'	0.34	0.54	0.51	0.11	–	–	–	–		52
					3' - <5'	0.29	0.37	0.39	0.11	–	–	–	–		52
					5' - 10'	0.32	0.34	0.37	0.11	–	–	–	–		43
					15'	0.44	0.50	0.53	0.11	–	–	–	–		39
					20'	0.57	0.66	0.70	0.11	–	–	–	–		39
					25'	0.70	0.84	0.87	0.11	–	–	–	–		38
					30'	0.83	1.02	1.05	0.11	–	–	–	–		38

TABLE 10B - STANDARD PRECAST BOX CULVERT DESIGNS (3" COVER) - 5' & 6' SPANS

SPAN x RISE (S) (R) (Ft.)	SLAB / WALL THICKNESS TOP (Tt) (in.)	BOT. (Tb) (in.)	SIDE (Tw) (in.)	HAUNCH (H) (in.)	DESIGN EARTH COVER ABOVE TOP SLAB	REINFORCEMENT AREAS (sq. in./Ft.) As1	As2	As3	As4	As5	As6	As7	As8	As9	As1 EXT. LENGTH (M) (in.)
5' x 3'	10	10	10	4 to 12	0.33' - <2'	0.24	0.33	0.32	0.24	0.24	0.24	0.24	0.24	See General Note 5	–
					2' - <3'	0.22	0.33	0.32	0.12	–	–	–	–		45
					3' - <5'	0.16	0.24	0.24	0.12	–	–	–	–		36
					5' - 10'	0.16	0.24	0.24	0.12	–	–	–	–		36
					15'	0.23	0.24	0.24	0.12	–	–	–	–		35
					20'	0.29	0.30	0.31	0.12	–	–	–	–		35
					25'	0.36	0.38	0.39	0.12	–	–	–	–		35
					30'	0.43	0.46	0.47	0.12	–	–	–	–		35
5' x 4'	10	10	10	4 to 12	0.33' - <2'	0.24	0.35	0.34	0.24	0.24	0.24	0.24	0.24		–
					2' - <3'	0.22	0.35	0.34	0.12	–	–	–	–		45
					3' - <5'	0.15	0.24	0.24	0.12	–	–	–	–		45
					5' - 10'	0.16	0.24	0.24	0.12	–	–	–	–		36
					15'	0.22	0.25	0.27	0.12	–	–	–	–		35
					20'	0.29	0.33	0.34	0.12	–	–	–	–		35
					25'	0.36	0.41	0.43	0.12	–	–	–	–		35
					30'	0.42	0.50	0.51	0.12	–	–	–	–		35
5' x 5'	10	10	10	4 to 12	0.33' - <2'	0.24	0.37	0.36	0.24	0.24	0.24	0.24	0.24		–
					2' - <3'	0.21	0.37	0.36	0.12	–	–	–	–		45
					3' - <5'	0.16	0.24	0.25	0.12	–	–	–	–		45
					5' - 10'	0.17	0.24	0.24	0.12	–	–	–	–		45
					15'	0.24	0.27	0.29	0.12	–	–	–	–		36
					20'	0.30	0.36	0.38	0.12	–	–	–	–		35
					25'	0.37	0.44	0.47	0.12	–	–	–	–		35
					30'	0.44	0.53	0.56	0.12	–	–	–	–		35
6' x 3'	10	10	10	4 to 12	0.33' - <2'	0.28	0.40	0.36	0.24	0.24	0.24	0.24	0.28		–
					2' - <3'	0.28	0.40	0.36	0.12	–	–	–	–		43
					3' - <5'	0.22	0.26	0.28	0.12	–	–	–	–		39
					5' - 10'	0.24	0.24	0.24	0.12	–	–	–	–		39
					15'	0.34	0.31	0.32	0.12	–	–	–	–		38
					20'	0.44	0.41	0.42	0.12	–	–	–	–		38
					25'	0.54	0.52	0.53	0.12	–	–	–	–		38
					30'	0.64	0.63	0.64	0.12	–	–	–	–		38
6' x 4'	10	10	10	4 to 12	0.33' - <2'	0.27	0.42	0.39	0.24	0.24	0.24	0.24	0.27		–
					2' - <3'	0.27	0.42	0.39	0.12	–	–	–	–		43
					3' - <5'	0.21	0.28	0.30	0.12	–	–	–	–		39
					5' - 10'	0.23	0.24	0.25	0.12	–	–	–	–		39
					15'	0.32	0.34	0.35	0.12	–	–	–	–		38
					20'	0.42	0.45	0.47	0.12	–	–	–	–		38
					25'	0.51	0.56	0.58	0.12	–	–	–	–		38
					30'	0.61	0.68	0.70	0.12	–	–	–	–		38
6' x 5'	10	10	10	4 to 12	0.33' - <2'	0.26	0.44	0.42	0.24	0.24	0.24	0.24	0.26		–
					2' - <3'	0.26	0.44	0.42	0.12	–	–	–	–		43
					3' - <5'	0.22	0.30	0.33	0.12	–	–	–	–		43
					5' - 10'	0.24	0.25	0.27	0.12	–	–	–	–		39
					15'	0.33	0.36	0.39	0.12	–	–	–	–		38
					20'	0.42	0.48	0.51	0.12	–	–	–	–		38
					25'	0.52	0.61	0.63	0.12	–	–	–	–		38
					30'	0.61	0.74	0.76	0.12	–	–	–	–		38
6' x 6'	10	10	10	4 to 12	0.33' - <2'	0.27	0.46	0.44	0.24	0.24	0.24	0.24	0.27		–
					2' - <3'	0.27	0.46	0.44	0.12	–	–	–	–		52
					3' - <5'	0.23	0.31	0.34	0.12	–	–	–	–		52
					5' - 10'	0.25	0.27	0.30	0.12	–	–	–	–		43
					15'	0.35	0.39	0.42	0.12	–	–	–	–		39
					20'	0.45	0.52	0.55	0.12	–	–	–	–		39
					25'	0.54	0.65	0.68	0.12	–	–	–	–		38
					30'	0.64	0.78	0.81	0.12	–	–	–	–		38

TABLE 11A - STANDARD PRECAST BOX CULVERT DESIGNS (3" COVER) - 7' SPANS

SPAN x RISE (S) (R) (Ft.)	SLAB / WALL THICKNESS TOP (Tt) (in.)	BOT. (Tb) (in.)	SIDE (Tw) (in.)	HAUNCH (H) (in.)	DESIGN EARTH COVER ABOVE TOP SLAB	REINFORCEMENT AREAS (sq. in./Ft.) As1	As2	As3	As4	As5	As6	As7	As8	As9	As1 EXT. LENGTH (M) (in.)
7' x 4'	9	9	9	4 to 12	0.33' - <2'	0.42	0.58	0.52	0.22	0.22	0.22	0.31	0.42	See General Note 5	–
					2' - <3'	0.42	0.58	0.51	0.11	–	–	–	–		43
					3' - <5'	0.36	0.41	0.44	0.11	–	–	–	–		43
					5' - 10'	0.39	0.40	0.39	0.11	–	–	–	–		43
					15'	0.56	0.56	0.58	0.11	–	–	–	–		41
					20'	0.74	0.76	0.77	0.11	–	–	–	–		41
					25'	0.92	0.97	0.97	0.11	–	–	–	–		41
	9	9.5	9	7 to 12	30'	1.09	1.18	1.10	0.11	–	–	–	–		41
7' x 5'	9	9	9	4 to 12	0.33' - <2'	0.41	0.61	0.55	0.22	0.23	0.22	0.30	0.41		–
					2' - <3'	0.41	0.61	0.55	0.11	–	–	–	–		47
					3' - <5'	0.37	0.43	0.47	0.11	–	–	–	–		43
					5' - 10'	0.39	0.41	0.43	0.11	–	–	–	–		43
					15'	0.56	0.61	0.63	0.11	–	–	–	–		41
					20'	0.73	0.82	0.83	0.11	–	–	–	–		41
					25'	0.90	1.04	1.06	0.11	–	–	–	–		41
	9	9.5	9	7 to 12	30'	1.06	1.26	1.19	0.11	–	–	–	–		41
7' x 6'	9	9	9	4 to 12	0.33' - <2'	0.42	0.63	0.58	0.22	0.24	0.22	0.30	0.42		–
					2' - <3'	0.42	0.63	0.58	0.11	–	–	–	–		59
					3' - <5'	0.38	0.45	0.50	0.11	–	–	–	–		47
					5' - 10'	0.41	0.44	0.47	0.11	–	–	–	–		43
					15'	0.57	0.65	0.68	0.11	–	–	–	–		41
					20'	0.75	0.87	0.90	0.11	–	–	–	–		41
					25'	0.93	1.11	1.13	0.11	–	–	–	–		41
	9	9.5	9	7 to 12	30'	1.07	1.35	1.27	0.11	–	–	–	–		41
7' x 7'	9	9	9	4 to 12	0.33' - <2'	0.44	0.66	0.61	0.22	0.25	0.22	0.31	0.44		–
					2' - <3'	0.44	0.65	0.61	0.11	–	–	–	–		59
					3' - <5'	0.41	0.47	0.52	0.11	–	–	–	–		59
					5' - 10'	0.44	0.47	0.52	0.11	–	–	–	–		47
					15'	0.62	0.69	0.74	0.11	–	–	–	–		43
					20'	0.80	0.93	0.97	0.11	–	–	–	–		43
					25'	0.99	1.18	1.22	0.11	–	–	–	–		43
	9	9.5	9	7 to 12	30'	1.12	1.43	1.36	0.11	–	–	–	–		41

TABLE 11B - STANDARD PRECAST BOX CULVERT DESIGNS (3" COVER) - 7' SPANS

SPAN x RISE (S) (R) (Ft.)	SLAB / WALL THICKNESS TOP (Tt) (in.)	BOT. (Tb) (in.)	SIDE (Tw) (in.)	HAUNCH (H) (in.)	DESIGN EARTH COVER ABOVE TOP SLAB	REINFORCEMENT AREAS (sq. in./Ft.) As1	As2	As3	As4	As5	As6	As7	As8	As9	As1 EXT. LENGTH (M) (in.)
7' x 4'	10	10	10	4 to 12	0.33' - <2'	0.33	0.49	0.44	0.24	0.24	0.24	0.24	0.33	See General Note 5	–
					2' - <3'	0.33	0.49	0.44	0.12	–	–	–	–		43
					3' - <5'	0.29	0.35	0.38	0.12	–	–	–	–		43
					5' - 10'	0.31	0.30	0.31	0.12	–	–	–	–		43
					15'	0.44	0.44	0.45	0.12	–	–	–	–		41
					20'	0.58	0.59	0.60	0.12	–	–	–	–		41
					25'	0.71	0.74	0.75	0.12	–	–	–	–		41
					30'	0.85	0.91	0.91	0.12	–	–	–	–		41
7' x 5'	10	10	10	4 to 12	0.33' - <2'	0.32	0.51	0.47	0.24	0.24	0.24	0.24	0.32		–
					2' - <3'	0.32	0.51	0.47	0.12	–	–	–	–		47
					3' - <5'	0.29	0.37	0.41	0.12	–	–	–	–		43
					5' - 10'	0.31	0.32	0.35	0.12	–	–	–	–		43
					15'	0.44	0.47	0.50	0.12	–	–	–	–		41
					20'	0.57	0.63	0.65	0.12	–	–	–	–		41
					25'	0.70	0.80	0.82	0.12	–	–	–	–		41
					30'	0.84	0.97	0.99	0.12	–	–	–	–		41
7' x 6'	10	10	10	4 to 12	0.33' - <2'	0.33	0.53	0.50	0.24	0.24	0.24	0.24	0.33		–
					2' - <3'	0.33	0.53	0.50	0.12	–	–	–	–		59
					3' - <5'	0.30	0.38	0.43	0.12	–	–	–	–		47
					5' - 10'	0.33	0.35	0.38	0.12	–	–	–	–		43
					15'	0.45	0.51	0.54	0.12	–	–	–	–		41
					20'	0.58	0.68	0.70	0.12	–	–	–	–		41
					25'	0.72	0.85	0.88	0.12	–	–	–	–		41
					30'	0.85	1.04	1.06	0.12	–	–	–	–		41
7' x 7'	10	10	10	4 to 12	0.33' - <2'	0.35	0.55	0.52	0.24	0.24	0.24	0.24	0.35		–
					2' - <3'	0.35	0.55	0.52	0.12	–	–	–	–		59
					3' - <5'	0.32	0.40	0.46	0.12	–	–	–	–		59
					5' - 10'	0.35	0.37	0.41	0.12	–	–	–	–		47
					15'	0.48	0.54	0.58	0.12	–	–	–	–		43
					20'	0.62	0.72	0.76	0.12	–	–	–	–		43
					25'	0.76	0.90	0.94	0.12	–	–	–	–		43
					30'	0.90	1.10	1.13	0.12	–	–	–	–		41

NOTES:
1. See Sheet 2 for General Notes.
2. See Sheet 7 for Reinforcing Details and dimension locations.
3. See Sheet 14 for WWR Bending Diagrams.

6/28/2012 1:56:26 PM rd960rh C:\d\projects\standards\structures\2013book\00292-10of14.dgn

TABLE 12A - STANDARD PRECAST BOX CULVERT DESIGNS (3" COVER) - 8' SPANS

SPAN x RISE (S) (R) (Ft.)	SLAB / WALL THICKNESS TOP (Tt) (in.)	BOT. (Tb) (in.)	SIDE (Tw) (in.)	HAUNCH (H) (in.)	DESIGN EARTH COVER ABOVE TOP SLAB	REINFORCEMENT AREAS (sq. in./Ft.) As1	As2	As3	As4	As5	As6	As7	As8	As9	As1 EXT. LENGTH (M) (in.)
8' x 4'	9	9	9	4 to 12	0.33' - <2'	0.52	0.66	0.57	0.22	0.24	0.22	0.42	0.52	See General Note 5	–
					2' - <3'	0.52	0.66	0.57	0.11	–	–	–	–		50
					3' - <5'	0.48	0.49	0.52	0.11	–	–	–	–		50
					5' - 10'	0.52	0.48	0.49	0.11	–	–	–	–		45
					15'	0.75	0.72	0.72	0.11	–	–	–	–		41
					20'	1.00	0.98	0.97	0.11	–	–	–	–		41
	9	9.5	9	8 to 12	25'	1.25	1.24	1.14	0.11	–	–	–	–		41
	10	10.5	9		30'	1.31	1.29	1.21	0.11	–	–	–	–		41
8' x 5'	9	9	9	4 to 12	0.33' - <2'	0.51	0.69	0.60	0.22	0.25	0.22	0.40	0.51		–
					2' - <3'	0.51	0.69	0.60	0.11	–	–	–	–		50
					3' - <5'	0.46	0.52	0.56	0.11	–	–	–	–		45
					5' - 10'	0.51	0.51	0.53	0.11	–	–	–	–		45
					15'	0.74	0.77	0.78	0.11	–	–	–	–		41
					20'	0.97	1.05	1.05	0.11	–	–	–	–		41
	9	9.5	9	8 to 12	25'	1.20	1.33	1.23	0.11	–	–	–	–		41
	10	10.5	9		30'	1.26	1.38	1.30	0.11	–	–	–	–		41
8' x 6'	9	9	9	4 to 12	0.33' - <2'	0.51	0.72	0.64	0.22	0.26	0.22	0.39	0.51		–
					2' - <3'	0.51	0.72	0.64	0.11	–	–	–	–		50
					3' - <5'	0.47	0.55	0.59	0.11	–	–	–	–		50
					5' - 10'	0.52	0.55	0.58	0.11	–	–	–	–		45
					15'	0.74	0.83	0.85	0.11	–	–	–	–		41
					20'	0.97	1.12	1.13	0.11	–	–	–	–		41
	9	9.5	9	8 to 12	25'	1.18	1.42	1.32	0.11	–	–	–	–		41
	10	10.5	9		30'	1.26	1.46	1.39	0.11	–	–	–	–		41
8' x 7'	9	9	9	4 to 12	0.33' - <2'	0.52	0.74	0.67	0.22	0.26	0.22	0.40	0.52		–
					2' - <3'	0.52	0.74	0.67	0.11	–	–	–	–		55
					3' - <5'	0.49	0.57	0.62	0.11	–	–	–	–		55
					5' - 10'	0.55	0.59	0.63	0.11	–	–	–	–		50
					15'	0.77	0.88	0.91	0.11	–	–	–	–		41
					20'	1.01	1.19	1.21	0.11	–	–	–	–		41
	9	9.5	9	8 to 12	25'	1.21	1.51	1.41	0.11	–	–	–	–		41
	10	10.5	9		30'	1.31	1.53	1.47	0.11	–	–	–	–		41
8' x 8'	9	9	9	4 to 12	0.33' - <2'	0.55	0.77	0.70	0.22	0.27	0.22	0.41	0.55		–
					2' - <3'	0.55	0.77	0.70	0.13	–	–	–	–		65
					3' - <5'	0.53	0.59	0.64	0.12	–	–	–	–		65
					5' - 10'	0.60	0.63	0.68	0.11	–	–	–	–		55
					15'	0.83	0.93	0.98	0.11	–	–	–	–		45
					20'	1.08	1.26	1.29	0.11	–	–	–	–		45
	9	9.5	9	8 to 12	25'	1.28	1.59	1.50	0.11	–	–	–	–		41
	10	10.5	9		30'	1.41	1.61	1.55	0.11	–	–	–	–		41

TABLE 12B - STANDARD PRECAST BOX CULVERT DESIGNS (3" COVER) - 8' SPANS

SPAN x RISE (S) (R) (Ft.)	SLAB / WALL THICKNESS TOP (Tt) (in.)	BOT. (Tb) (in.)	SIDE (Tw) (in.)	HAUNCH (H) (in.)	DESIGN EARTH COVER ABOVE TOP SLAB	REINFORCEMENT AREAS (sq. in./Ft.) As1	As2	As3	As4	As5	As6	As7	As8	As9	As1 EXT. LENGTH (M) (in.)
8' x 4'	10	10	10	4 to 12	0.33' - <2'	0.42	0.56	0.49	0.24	0.24	0.24	0.32	0.41	See General Note 5	–
					2' - <3'	0.42	0.56	0.49	0.12	–	–	–	–		50
					3' - <5'	0.38	0.42	0.46	0.12	–	–	–	–		50
					5' - 10'	0.41	0.38	0.39	0.12	–	–	–	–		45
					15'	0.59	0.56	0.57	0.12	–	–	–	–		41
					20'	0.78	0.75	0.76	0.12	–	–	–	–		41
					25'	0.97	0.96	0.96	0.12	–	–	–	–		41
	10	10.5	10	8 to 12	30'	1.15	1.16	1.10	0.12	–	–	–	–		41
8' x 5'	10	10	10	4 to 12	0.33' - <2'	0.40	0.58	0.52	0.24	.034	0.24	0.31	0.40		–
					2' - <3'	0.40	0.58	0.52	0.12	–	–	–	–		50
					3' - <5'	0.37	0.45	0.48	0.12	–	–	–	–		45
					5' - 10'	0.41	0.41	0.43	0.12	–	–	–	–		45
					15'	0.58	0.60	0.62	0.12	–	–	–	–		41
					20'	0.76	0.81	0.81	0.12	–	–	–	–		41
					25'	0.94	1.03	1.03	0.12	–	–	–	–		41
	10	10.5	10	8 to 12	30'	1.10	1.24	1.24	0.12	–	–	–	–		41
8' x 6'	10	10	10	4 to 12	0.33' - <2'	0.40	0.60	0.55	0.24	0.24	0.24	0.30	0.40		–
					2' - <3'	0.40	0.60	0.55	0.12	–	–	–	–		50
					3' - <5'	0.37	0.47	0.51	0.12	–	–	–	–		50
					5' - 10'	0.42	0.43	0.46	0.12	–	–	–	–		45
					15'	0.58	0.64	0.67	0.12	–	–	–	–		41
					20'	0.76	0.86	0.88	0.12	–	–	–	–		41
					25'	0.94	1.09	1.11	0.12	–	–	–	–		41
	10	10.5	10	8 to 12	30'	1.09	1.32	1.26	0.12	–	–	–	–		41
8' x 7'	10	10	10	4 to 12	0.33' - <2'	0.41	0.63	0.58	0.24	0.24	0.24	0.30	0.41		–
					2' - <3'	0.41	0.63	0.58	0.12	–	–	–	–		55
					3' - <5'	0.39	0.49	0.53	0.12	–	–	–	–		55
					5' - 10'	0.44	0.46	0.50	0.12	–	–	–	–		50
					15'	0.61	0.68	0.72	0.12	–	–	–	–		45
					20'	0.78	0.91	0.94	0.12	–	–	–	–		41
					25'	0.97	1.16	1.18	0.12	–	–	–	–		41
	10	10.5	10	8 to 12	30'	1.11	1.40	1.34	0.12	–	–	–	–		41
8' x 8'	10	10	10	4 to 12	0.33' - <2'	0.44	0.64	0.60	0.24	0.24	0.24	0.31	0.44		–
					2' - <3'	0.44	0.64	0.60	0.12	–	–	–	–		65
					3' - <5'	0.42	0.51	0.56	0.12	–	–	–	–		65
					5' - 10'	0.47	0.50	0.55	0.12	–	–	–	–		55
					15'	0.65	0.72	0.77	0.12	–	–	–	–		45
					20'	0.84	0.96	1.01	0.12	–	–	–	–		45
					25'	1.03	1.22	1.26	0.12	–	–	–	–		41
	10	10.5	10	8 to 12	30'	1.16	1.47	1.42	0.12	–	–	–	–		41

NOTES:
1. See Sheet 2 for General Notes.
2. See Sheet 7 for Reinforcing Details and dimension locations.
3. See Sheet 14 for WWR Bending Diagrams.

6/28/2012 1:56:28 PM rd960rh C:\d\projects\standards\structures\2013book\00292-11of14.dgn

TABLE 13A - STANDARD PRECAST BOX CULVERT DESIGNS (3" COVER) - 9' SPANS

SPAN x RISE (S) (R) (Ft.)	SLAB / WALL THICKNESS TOP (Tt) (in.)	BOT. (Tb) (in.)	SIDE (Tw) (in.)	HAUNCH (H) (in.)	DESIGN EARTH COVER ABOVE TOP SLAB	REINFORCEMENT AREAS (sq. in./Ft.) As1	As2	As3	As4	As5	As6	As7	As8	As9	As1 EXT. LENGTH (M) (in.)
9' x 5'	9	9	9	4 to 12	0.33' - <2'	0.62	0.78	0.65	0.22	0.26	0.22	0.52	0.61	See General Note 5	–
					2' - <3'	0.62	0.78	0.65	0.11	–	–	–	–		54
					3' - <5'	0.58	0.63	0.61	0.11	–	–	–	–		49
					5' - 10'	0.65	0.63	0.64	0.11	–	–	–	–		49
					15'	0.95	0.96	0.95	0.11	–	–	–	–		44
	9	9	9	8	20'	1.26	1.32	1.28	0.11	–	–	–	–		44
	10	10.5	9	to	25'	1.39	1.41	1.32	0.11	–	–	–	–		44
	11	11.5	9	12	30'	1.46	1.50	1.42	0.11	–	–	–	–		44
9' x 6'	9	9	9	4 to 12	0.33' - <2'	0.60	0.81	0.69	0.22	0.27	0.27	0.51	0.60		–
					2' - <3'	0.60	0.81	0.69	0.11	–	–	–	–		54
					3' - <5'	0.56	0.66	0.65	0.11	–	–	–	–		49
					5' - 10'	0.65	0.68	0.69	0.11	–	–	–	–		49
					15'	0.94	1.03	1.02	0.11	–	–	–	–		44
	9	9	9	8	20'	1.25	1.40	1.38	0.11	–	–	–	–		44
	10	10.5	9	to	25'	1.37	1.49	1.40	0.11	–	–	–	–		44
	11	11.5	9	12	30'	1.44	1.58	1.50	0.11	–	–	–	–		44
9' x 7'	9	9	9	4 to 12	0.33' - <2'	0.61	0.84	0.72	0.22	0.28	0.22	0.51	0.61		–
					2' - <3'	0.61	0.83	0.72	0.11	–	–	–	–		59
					3' - <5'	0.58	0.69	0.68	0.11	–	–	–	–		54
					5' - 10'	0.67	0.73	0.75	0.11	–	–	–	–		49
					15'	0.96	1.09	1.10	0.11	–	–	–	–		44
	9	9	9	8	20'	1.27	1.49	1.47	0.11	–	–	–	–		44
	10	10.5	9	to	25'	1.38	1.57	1.48	0.11	–	–	–	–		44
	11	11.5	9	12	30'	1.49	1.70	1.58	0.11	–	–	–	–		44
9' x 8'	9	9.5	9	4 to 12	0.33' - <2'	0.60	0.85	0.73	0.22	0.29	0.22	0.52	0.53		–
					2' - <3'	0.64	0.86	0.76	0.12	–	–	–	–		59
					3' - <5'	0.62	0.72	0.72	0.11	–	–	–	–		59
					5' - 10'	0.71	0.77	0.81	0.11	–	–	–	–		54
					15'	1.01	1.16	1.17	0.11	–	–	–	–		44
	9	9.5	9	8	20'	1.27	1.56	1.45	0.11	–	–	–	–		44
	10	10.5	9	to	25'	1.45	1.65	1.57	0.11	–	–	–	–		44
	11	11.5	9	12	30'	1.59	1.72	1.66	0.11	–	–	–	–		44
9' x 9'	9	9.5	9	4 to 12	0.33' - <2'	0.68	0.88	0.76	0.22	0.29	0.22	0.55	0.57		–
					2' - <3'	0.68	0.88	0.78	0.18	–	–	–	–		72
					3' - <5'	0.68	0.75	0.78	0.18	–	–	–	–		72
					5' - 10'	0.79	0.82	0.88	0.17	–	–	–	–		59
					15'	1.11	1.22	1.26	0.13	–	–	–	–		49
	9	9.5	9	8	20'	1.37	1.64	1.54	0.13	–	–	–	–		49
	10	10.5	9	to	25'	1.56	1.73	1.65	0.13	–	–	–	–		44
	11	11.5	9.5	12	30'	1.56	1.73	1.68	0.12	–	–	–	–		44

TABLE 13B - STANDARD PRECAST BOX CULVERT DESIGNS (3" COVER) - 9' SPANS

SPAN x RISE (S) (R) (Ft.)	SLAB / WALL THICKNESS TOP (Tt) (in.)	BOT. (Tb) (in.)	SIDE (Tw) (in.)	HAUNCH (H) (in.)	DESIGN EARTH COVER ABOVE TOP SLAB	REINFORCEMENT AREAS (sq. in./Ft.) As1	As2	As3	As4	As5	As6	As7	As8	As9	As1 EXT. LENGTH (M) (in.)
9' x 5'	10	10	10	4 to 12	0.33' - <2'	0.49	0.65	0.57	0.24	0.24	0.24	0.40	0.48	See General Note 5	–
					2' - <3'	0.49	0.65	0.57	0.12	–	–	–	–		54
					3' - <5'	0.46	0.54	0.53	0.12	–	–	–	–		49
					5' - 10'	0.52	0.50	0.51	0.12	–	–	–	–		49
					15'	0.75	0.74	0.75	0.12	–	–	–	–		44
	10	10.5	10	8 to 12	20'	0.98	1.01	1.00	0.12	–	–	–	–		44
	11	11.5	10		25'	1.21	1.27	1.19	0.12	–	–	–	–		44
					30'	1.30	1.36	1.30	0.12	–	–	–	–		44
9' x 6'	10	10	10	4 to 12	0.33' - <2'	0.48	0.68	0.60	0.24	0.24	0.24	0.39	0.48		–
					2' - <3'	0.48	0.68	0.60	0.12	–	–	–	–		54
					3' - <5'	0.45	0.57	0.56	0.12	–	–	–	–		49
					5' - 10'	0.52	0.53	0.56	0.12	–	–	–	–		49
					15'	0.74	0.79	0.81	0.12	–	–	–	–		44
	10	10.5	10	8 to 12	20'	0.97	1.07	1.07	0.12	–	–	–	–		44
	11	11.5	10		25'	1.18	1.35	1.28	0.12	–	–	–	–		44
					30'	1.27	1.44	1.38	0.12	–	–	–	–		44
9' x 7'	10	10	10	4 to 12	0.33' - <2'	0.49	0.70	0.63	0.24	0.24	0.24	0.39	0.49		–
					2' - <3'	0.49	0.70	0.63	0.12	–	–	–	–		59
					3' - <5'	0.46	0.59	0.59	0.12	–	–	–	–		54
					5' - 10'	0.54	0.57	0.60	0.12	–	–	–	–		49
					15'	0.75	0.84	0.86	0.12	–	–	–	–		44
	10	10.5	10	8 to 12	20'	0.98	1.13	1.14	0.12	–	–	–	–		44
	11	11.5	10		25'	1.18	1.43	1.36	0.12	–	–	–	–		44
					30'	1.28	1.52	1.46	0.12	–	–	–	–		44
9' x 8'	10	10	10	4 to 12	0.33' - <2'	0.51	0.72	0.65	0.24	0.24	0.24	0.39	0.51		–
					2' - <3'	0.51	0.72	0.65	0.12	–	–	–	–		59
					3' - <5'	0.49	0.61	0.62	0.12	–	–	–	–		59
					5' - 10'	0.57	0.60	0.65	0.12	–	–	–	–		54
					15'	0.79	0.89	0.92	0.12	–	–	–	–		44
	10	10.5	10	8 to 12	20'	1.02	1.20	1.22	0.12	–	–	–	–		44
	11	11.5	10		25'	1.21	1.50	1.44	0.12	–	–	–	–		44
					30'	1.33	1.59	1.54	0.12	–	–	–	–		44
9' x 9'	10	10	10	4 to 12	0.33' - <2'	0.54	0.74	0.68	0.24	0.24	0.24	0.41	0.54		–
					2' - <3'	0.54	0.74	0.68	0.15	–	–	–	–		72
					3' - <5'	0.53	0.63	0.64	0.13	–	–	–	–		72
					5' - 10'	0.62	0.64	0.70	0.12	–	–	–	–		59
					15'	0.85	0.94	0.99	0.12	–	–	–	–		49
	10	10.5	10	8 to 12	20'	1.09	1.26	1.29	0.12	–	–	–	–		49
	11	11.5	10		25'	1.28	1.56	1.52	0.12	–	–	–	–		44
					30'	1.42	1.66	1.66	0.12	–	–	–	–		44

NOTES:
1. See Sheet 2 for General Notes.
2. See Sheet 7 for Reinforcing Details and dimension locations.
3. See Sheet 14 for WWR Bending Diagrams.

6/28/2012 1:56:31 PM rd960rh C:\d\projects\standards\structures\2013book\00292-12of14.dgn

TABLE 14 - STANDARD PRECAST BOX CULVERT DESIGNS (3" COVER) - 10' SPANS

SPAN x RISE (S) (R) (Ft.)	SLAB / WALL THICKNESS TOP (Tt) (in.)	BOT. (Tb) (in.)	SIDE (Tw) (in.)	HAUNCH (H) (in.)	DESIGN EARTH COVER ABOVE TOP SLAB	REINFORCEMENT AREAS (sq. in./Ft.) As1	As2	As3	As4	As5	As6	As7	As8	As9	As1 EXT. LENGTH (M) (in.)
10' x 5'	10	10	10	4 to 12	0.33' - <2'	0.60	0.73	0.61	0.24	0.24	0.24	0.50	0.57	See General Note 5	–
					2' - <3'	0.60	0.73	0.61	0.12	–	–	–	–		58
					3' - <5'	0.57	0.64	0.58	0.12	–	–	–	–		53
					5' - 10'	0.65	0.60	0.60	0.12	–	–	–	–		52
					15'	0.94	0.90	0.89	0.12	–	–	–	–		47
	10	10	10	8 to 12	20'	1.24	1.23	1.19	0.12	–	–	–	–		47
	11	11.5	10		25'	1.39	1.37	1.28	0.12	–	–	–	–		47
	12.5	12.5	10		30'	1.38	1.43	1.41	0.12	–	–	–	–		47
10' x 6'	10	10	10	4 to 12	0.33' - <2'	0.58	0.75	0.64	0.24	0.24	0.24	0.48	0.56		–
					2' - <3'	0.58	0.75	0.64	0.12	–	–	–	–		58
					3' - <5'	0.56	0.67	0.62	0.12	–	–	–	–		52
					5' - 10'	0.64	0.64	0.65	0.12	–	–	–	–		52
					15'	0.92	0.96	0.95	0.12	–	–	–	–		47
	10	10	10	8 to 12	20'	1.21	1.31	1.27	0.12	–	–	–	–		47
	11	11.5	10		25'	1.35	1.44	1.36	0.12	–	–	–	–		47
	12.5	12.5	10		30'	1.35	1.51	1.49	0.12	–	–	–	–		47
10' x 7'	10	10	10	4 to 12	0.33' - <2'	0.57	0.78	0.67	0.24	0.24	0.25	0.48	0.57		–
					2' - <3'	0.57	0.78	0.67	0.12	–	–	–	–		58
					3' - <5'	0.58	0.70	0.65	0.12	–	–	–	–		58
					5' - 10'	0.65	0.68	0.70	0.12	–	–	–	–		52
					15'	0.92	1.02	1.02	0.12	–	–	–	–		47
	10	10	10	8 to 12	20'	1.21	1.38	1.35	0.12	–	–	–	–		47
	11	11.5	10		25'	1.33	1.52	1.44	0.12	–	–	–	–		47
	12.5	12.5	10		30'	1.38	1.58	1.57	0.12	–	–	–	–		47
10' x 8'	10	10	10	4 to 12	0.33' - <2'	0.58	0.80	0.70	0.24	0.26	0.24	0.48	0.58		–
					2' - <3'	0.58	0.80	0.70	0.12	–	–	–	–		64
					3' - <5'	0.60	0.72	0.68	0.12	–	–	–	–		58
					5' - 10'	0.67	0.72	0.75	0.12	–	–	–	–		52
					15'	0.95	1.08	1.08	0.12	–	–	–	–		47
	10	10	10	8 to 12	20'	1.24	1.45	1.44	0.12	–	–	–	–		47
	11	11.5	10		25'	1.36	1.59	1.52	0.12	–	–	–	–		47
	12.5	12.5	10		30'	1.45	1.64	1.64	0.12	–	–	–	–		47
10' x 9'	10	10	10	4 to 12	0.33' - <2'	0.61	0.82	0.73	0.24	0.26	0.24	0.50	0.61		–
					2' - <3'	0.61	0.82	0.73	0.14	–	–	–	–		70
					3' - <5'	0.64	0.75	0.73	0.13	–	–	–	–		64
					5' - 10'	0.72	0.77	0.80	0.12	–	–	–	–		58
					15'	1.00	1.13	1.15	0.12	–	–	–	–		52
	10	10	10	8 to 12	20'	1.30	1.53	1.52	0.12	–	–	–	–		47
	11	11.5	10		25'	1.42	1.66	1.60	0.12	–	–	–	–		47
	12.5	12.5	10		30'	1.57	1.70	1.72	0.12	–	–	–	–		47
10' x 10'	10	10	10	4 to 12	0.33' - <2'	0.66	0.84	0.75	0.24	0.27	0.24	0.52	0.65		–
					2' - <3'	0.66	0.84	0.75	0.20	–	–	–	–		79
					3' - <5'	0.70	0.77	0.79	0.19	–	–	–	–		70
					5' - 10'	0.79	0.81	0.87	0.18	–	–	–	–		64
					15'	1.09	1.19	1.23	0.15	–	–	–	–		52
	10	10	10	8 to 12	20'	1.40	1.61	1.61	0.14	–	–	–	–		52
	11	11.5	10		25'	1.53	1.74	1.68	0.14	–	–	–	–		47
	12.5	12.5	10.5		30'	1.60	1.71	1.74	0.14	–	–	–	–		47

TABLE 15 - STANDARD PRECAST BOX CULVERT DESIGNS (3" COVER) - 11' SPANS

SPAN x RISE (S) (R) (Ft.)	SLAB / WALL THICKNESS TOP (Tt) (in.)	BOT. (Tb) (in.)	SIDE (Tw) (in.)	HAUNCH (H) (in.)	DESIGN EARTH COVER ABOVE TOP SLAB	REINFORCEMENT AREAS (sq. in./Ft.) As1	As2	As3	As4	As5	As6	As7	As8	As9	As1 EXT. LENGTH (M) (in.)
11' x 4'	11	11	11	4 to 12	0.33' - <2'	0.60	0.66	0.54	0.27	0.27	0.27	0.52	0.56	See General Note 5	–
					2' - <3'	0.60	0.66	0.54	0.14	–	–	–	–		62
					3' - <5'	0.60	0.61	0.53	0.14	–	–	–	–		62
					5' - 10'	0.79	0.63	0.62	0.14	–	–	–	–		55
					15'	1.01	0.82	0.79	0.14	–	–	–	–		55
	12	12	11	8 to 12	20'	1.34	1.11	1.06	0.14	–	–	–	–		55
	13.5	13.5	11		25'	1.52	1.27	1.23	0.14	–	–	–	–		55
					30'	1.54	1.37	1.34	0.14	–	–	–	–		50
11' x 6'	11	11	11	4 to 12	0.33' - <2'	0.57	0.71	0.60	0.27	0.27	0.27	0.47	0.53		–
					2' - <3'	0.56	0.71	0.60	0.14	–	–	–	–		62
					3' - <5'	0.56	0.67	0.59	0.14	–	–	–	–		55
					5' - 10'	0.73	0.71	0.72	0.14	–	–	–	–		55
					15'	0.92	0.92	0.91	0.14	–	–	–	–		50
	11	11	11	8 to 12	20'	1.21	1.25	1.21	0.14	–	–	–	–		50
	12	12	11		25'	1.37	1.43	1.39	0.14	–	–	–	–		50
	13.5	13.5	11		30'	1.39	1.53	1.50	0.14	–	–	–	–		50
11' x 8'	11	11	11	4 to 12	0.33' - <2'	0.55	0.76	0.66	0.27	0.27	0.27	0.46	0.55		–
					2' - <3'	0.55	0.76	0.66	0.14	–	–	–	–		62
					3' - <5'	0.54	0.72	0.65	0.14	–	–	–	–		62
					5' - 10'	0.73	0.79	0.82	0.14	–	–	–	–		55
					15'	0.93	1.03	1.03	0.14	–	–	–	–		50
	11	11	11	8 to 12	20'	1.21	1.39	1.36	0.14	–	–	–	–		50
	12	12.5	11		25'	1.34	1.56	1.50	0.14	–	–	–	–		50
	13.5	13.5	11		30'	1.41	1.66	1.65	0.14	–	–	–	–		50
11' x 10'	11	11	11	4 to 12	0.33' - <2'	0.60	0.81	0.71	0.27	0.27	0.27	0.48	0.60		–
					2' - <3'	0.60	0.81	0.71	0.15	–	–	–	–		75
					3' - <5'	0.61	0.77	0.70	0.14	–	–	–	–		69
					5' - 10'	0.80	0.88	0.93	0.14	–	–	–	–		62
					15'	1.01	1.13	1.15	0.14	–	–	–	–		55
	11	11	11	8 to 12	20'	1.30	1.52	1.52	0.14	–	–	–	–		50
	12	12.5	11		25'	1.42	1.70	1.65	0.14	–	–	–	–		50
	13.5	14	11		30'	1.53	1.77	1.74	0.14	–	–	–	–		50
11' x 11'	11	11	11	4 to 12	0.33' - <2'	0.64	0.83	0.74	0.27	0.27	0.27	0.51	0.64		–
					2' - <3'	0.64	0.83	0.74	0.21	–	–	–	–		86
					3' - <5'	0.67	0.79	0.75	0.21	–	–	–	–		75
					5' - 10'	0.88	0.93	0.99	0.19	–	–	–	–		69
					15'	1.09	1.19	1.23	0.16	–	–	–	–		55
	11	11	11	8 to 12	20'	1.40	1.59	1.60	0.15	–	–	–	–		55
	12	12.5	11		25'	1.54	1.77	1.73	0.15	–	–	–	–		50
	13.5	14	11.5		30'	1.57	1.77	1.76	0.14	–	–	–	–		50

NOTES:
1. See Sheet 2 for General Notes.
2. See Sheet 7 for Reinforcing Details and dimension locations.
3. See Sheet 14 for WWR Bending Diagrams.

6/28/2012 1:56:33 PM rd960rh C:\d\projects\standards\structures\2013book\00292-13of14.dgn

TABLE 16 - STANDARD PRECAST BOX CULVERT DESIGNS (3" COVER) - 12' SPANS

SPAN x RISE (S) (R) (Ft.)	SLAB / WALL THICKNESS TOP (Tt) (in.)	BOT. (Tb) (in.)	SIDE (Tw) (in.)	HAUNCH (H) (in.)	DESIGN EARTH COVER ABOVE TOP SLAB	REINFORCEMENT AREAS (sq. in./Ft.) As1	As2	As3	As4	As5	As6	As7	As8	As9	As1 EXT. LENGTH (M) (in.)
12' x 4'	12	12	12	4 to 12	0.33' - <2'	0.59	0.64	0.51	0.29	0.29	0.29	0.52	0.55	See General Note 5	–
					2' - <3'	0.60	0.64	0.51	0.15	–	–	–	–		73
					3' - <5'	0.60	0.61	0.51	0.15	–	–	–	–		66
					5' - 10'	0.81	0.61	0.61	0.15	–	–	–	–		66
					15'	1.04	0.80	0.77	0.15	–	–	–	–		59
					20'	1.37	1.08	1.03	0.15	–	–	–	–		59
	13	13	12	8 to 12	25'	1.58	1.26	1.21	0.15	–	–	–	–		59
	14.5	14.5	12		30'	1.63	1.38	1.34	0.15	–	–	–	–		53
12' x 6'	12	12	12	4 to 12	0.33' - <2'	0.56	0.70	0.57	0..29	0.29	0.29	0.47	0.52		–
					2' - <3'	0.56	0.70	0.57	0.15	–	–	–	–		66
					3' - <5'	0.56	0.67	0.57	0.15	–	–	–	–		59
					5' - 10'	0.74	0.69	0.70	0.15	–	–	–	–		59
					15'	0.94	0.90	0.88	0.15	–	–	–	–		53
					20'	1.23	1.22	1.17	0.15	–	–	–	–		53
	13	13	12	8 to 12	25'	1.40	1.42	1.37	0.15	–	–	–	–		53
	14.5	15	12		30'	1.44	1.54	1.48	0.15	–	–	–	–		53
12' x 8'	12	12	12	4 to 12	0.33' - <2'	0.55	0.75	0.63	0.29	0.29	0.29	0.45	0.53		–
					2' - <3'	0.55	0.75	0.63	0.15	–	–	–	–		66
					3' - <5'	0.55	0.73	0.63	0.15	–	–	–	–		59
					5' - 10'	0.73	0.77	0.79	0.15	–	–	–	–		59
					15'	0.93	1.00	0.99	0.15	–	–	–	–		53
	12	12	12	8 to 12	20'	1.21	1.35	1.31	0.15	–	–	–	–		53
	13	13.5	12		25'	1.35	1.55	1.48	0.15	–	–	–	–		53
	14.5	15	12		30'	1.40	1.67	1.62	0.15	–	–	–	–		53
12' x 10'	12	12	12	4 to 12	0.33' - <2'	0.57	0.80	0.68	0.29	0.29	0.29	0.46	0.57		–
					2' - <3'	0.57	0.80	0.68	0.15	–	–	–	–		73
					3' - <5'	0.59	0.77	0.68	0.15	–	–	–	–		66
					5' - 10'	0.78	0.85	0.89	0.15	–	–	–	–		59
					15'	0.98	1.10	1.11	0.15	–	–	–	–		53
	12	12	12	8 to 12	20'	1.26	1.47	1.45	0.15	–	–	–	–		53
	13	13.5	12		25'	1.39	1.68	1.63	0.15	–	–	–	–		53
	14.5	15	12		30'	1.48	1.79	1.76	0.15	–	–	–	–		53
12' x 12'	12	12	12	4 to 12	0.33' - <2'	0.65	0.84	0.73	0.29	0.29	0.29	0.50	0.65		–
					2' - <3'	0.65	0.84	0.73	0.23	–	–	–	–		93
					3' - <5'	0.68	0.81	0.75	0.22	–	–	–	–		80
					5' - 10'	0.90	0.94	1.01	0.21	–	–	–	–		73
					15'	1.12	1.20	1.24	0.18	–	–	–	–		59
	12	12	12	8 to 12	20'	1.42	1.60	1.61	0.16	–	–	–	–		59
	13	13.5	12		25'	1.57	1.81	1.78	0.16	–	–	–	–		53
	14.5	15	12.5		30'	1.63	1.86	1.85	0.15	–	–	–	–		53

NOTES:
1. See Sheet 2 of 14 for General Notes.
2. See Sheet 7 of 14 for Reinforcing Details and dimension locations.

WELDED WIRE REINFORCEMENT BENDING DIAGRAM

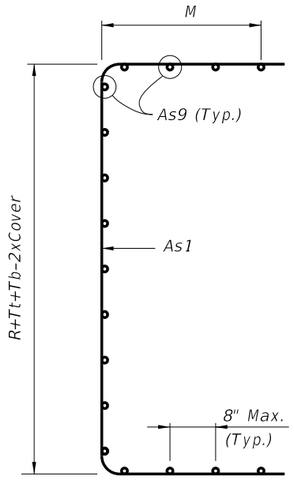

WWR PIECE NO. 1
(2 Reqd. per segment)

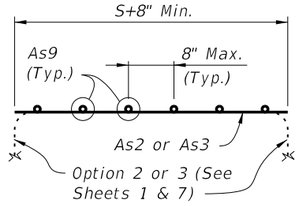

WWR PIECE NO. 2
(2 Reqd. per segment)

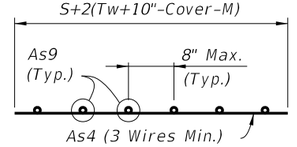

WWR PIECE NO. 4
(Tongue Reinforcement)
(4 Reqd. per segment)

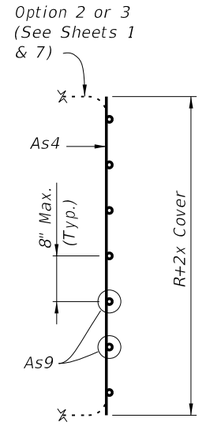

WWR PIECE NO. 3
(2 Reqd. per segment)

TYPE 2 BOX SECTION (DESIGN EARTH COVER 2' OR GREATER)

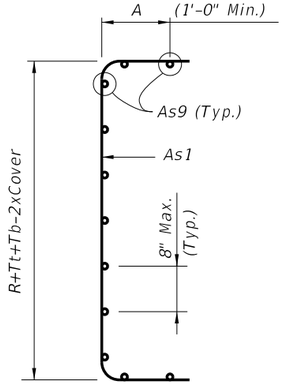

WWR PIECE NO. 1
(2 Reqd. per segment)

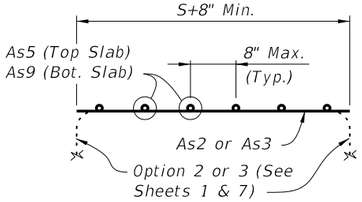

WWR PIECE NO. 2
(2 Reqd. per segment)

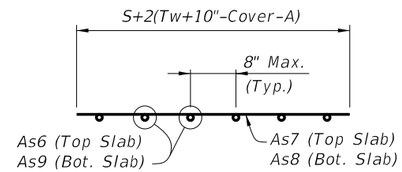

WWR PIECE NO. 4
(2 Reqd. per segment)

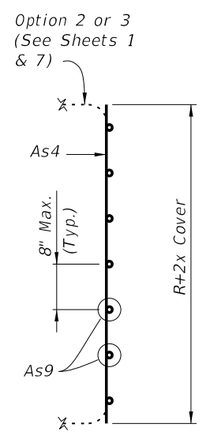

WWR PIECE NO. 3
(2 Reqd. per segment)

TYPE 1 BOX SECTION (DESIGN EARTH COVER LESS THAN 2')

REINFORCEMENT NOTES:
1. Reinforcement bending dimensions are out-to-out.
2. See General Notes 4, 5 and 6 on Sheet 2.
3. See Tables 1 thru 16 for dimensions M, R, S, Tb, Tt and Tw.
4. Dimension "A" is determined by the Manufacturer in accordance with the requirements of Detail "B" on Sheets 1 and 7.

C:\d\projects\standards\structures\2013book\00292-14of14.dgn
rd960rh
1:56:35 PM
6/28/2012

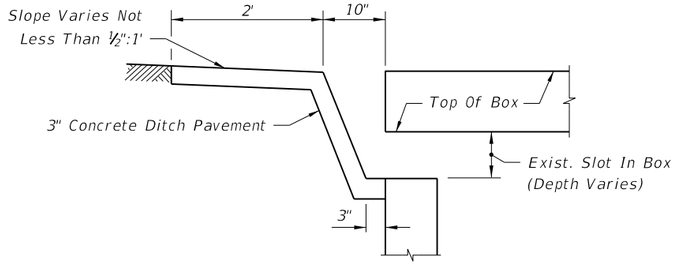

LONGITUDINAL SECTION

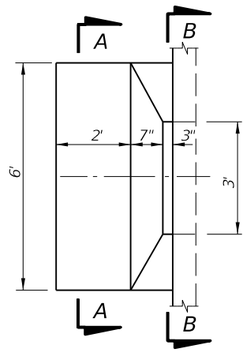

PLAN

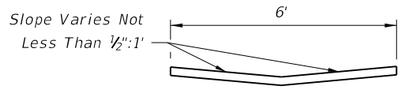

SECTION AA

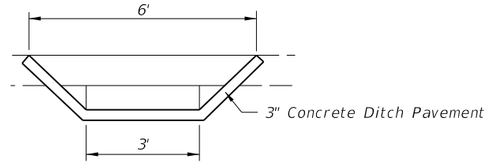

SECTION BB

SAFETY MODIFICATION FOR INLETS IN BOX CULVERTS

6/28/2012 1:56:38 PM rd960rh C:\d\projects\standards\roadway\00200-s\00293-01.dgn

LAST REVISION	REVISION	DESCRIPTION:		FDOT DESIGN STANDARDS 2013	SAFETY MODIFICATIONS FOR INLETS IN BOX CULVERTS	INDEX NO.	SHEET NO.
07/01/07						293	1

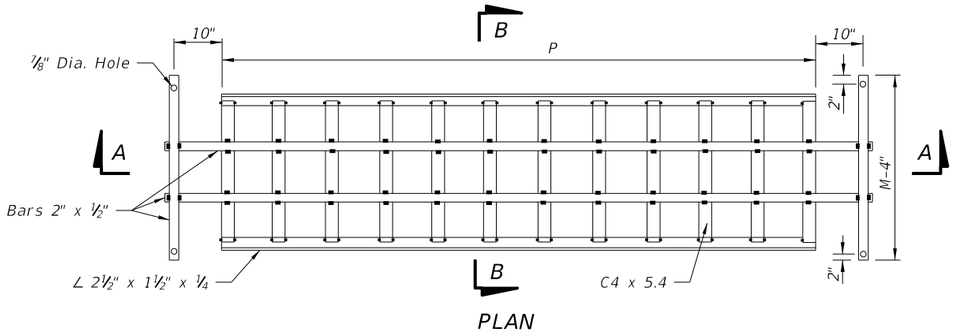

PLAN

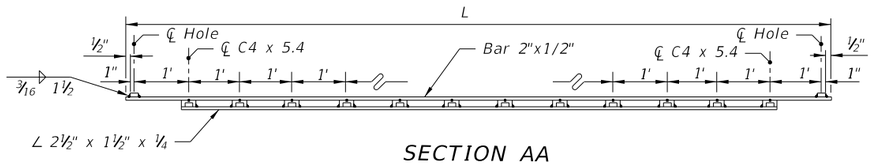

SECTION AA

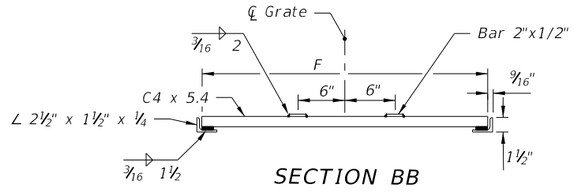

SECTION BB

GRATE DETAIL

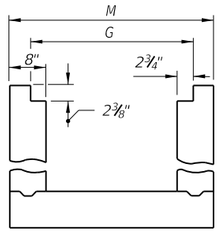

GRATE SEAT DETAIL

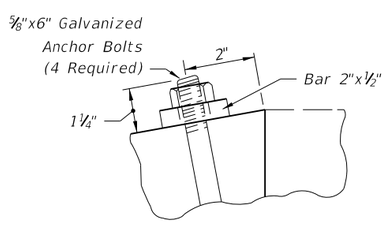

ANCHOR BOLT DETAIL

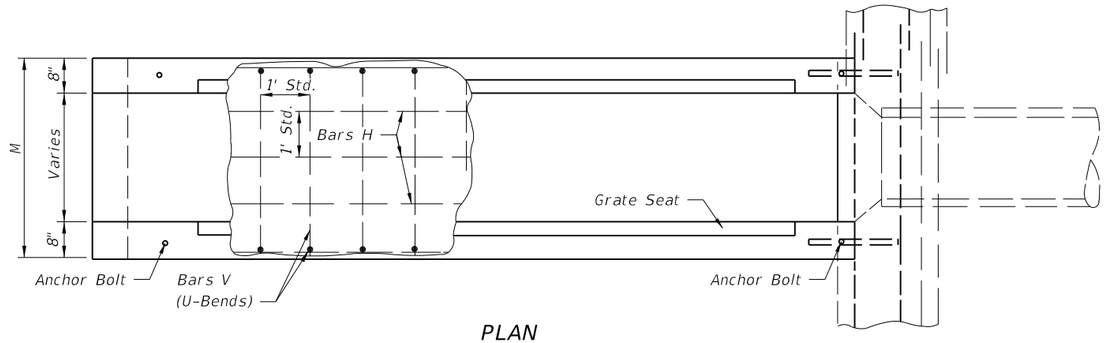

PLAN

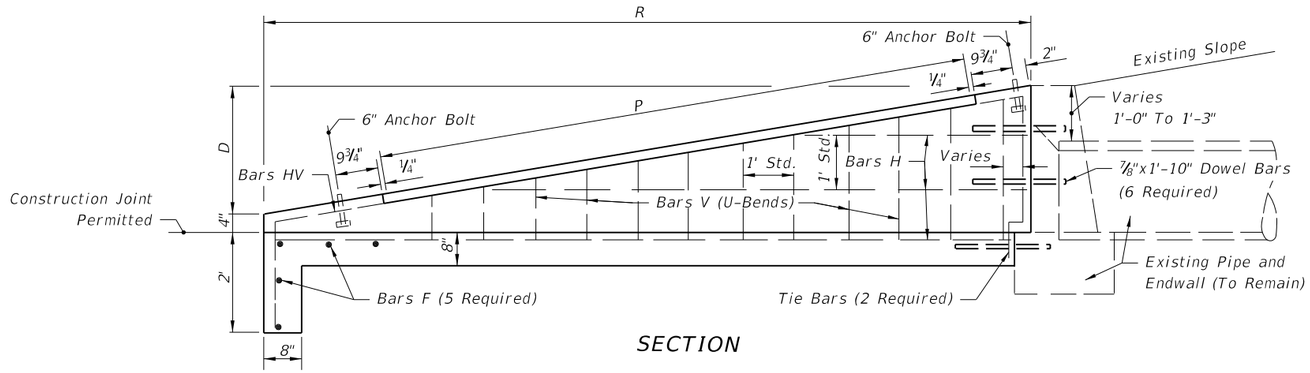

SECTION

GENERAL NOTES

1. For use criteria see "Steel Grating Use Criteria" Index No. 261.
2. Grates shall be ASTM A242, A572 or A588, Grade 50 steel, and galvanized in accordance with Section 975 and 425-3.2 of the Standard Specifications.
3. Channel section C3 x 6.0 may be substituted for the C4 x 5.4 channel.
4. All reinforcing No. 4 bars with 2" clearance except as noted. Spacings shown are center to center. Laps to be 12" minimum. Welded wire fabric (two cages max.) having an equivalent cross section area (0.20 sq. in.) may be substituted for bar reinforcement.
5. Drill 1¼" holes 8" deep with a rotary drill in existing endwall for dowel bars. Holes shall be thoroughly cleaned prior to installing Adhesive-Bonded Dowels.
6. Endwall to be paid for under the contract unit price for Class I Concrete (Endwalls), CY and Reinforcing Steel (Roadway), LB. Cost of Adhesive-Bonded Dowels to be included in the contract unit price for reinforcing steel. Cost of grates to be paid for under the contract unit price for Endwall Grate, LB., plan quantity. Cost of galvanized bolts and nuts to be included in the contract unit price for the grate.
7. Sod slopes 5' each side and above endwall. Sodding to be paid for under the contract unit price for Performance Turf, SY.

DIMENSIONS AND QUANTITIES PER GRATE

Slope	Pipe Size	Channels @ 5.4 Lbs./LF			Bars @ 3.4 lbs/LF (2 ea.)			Angles @ 3.2 Lbs./LF		(2)Total Weight-Lbs
		Quantity	F	Lbs.	L	M-4"	Lbs.	P	Lbs.	
1:6	15"	10	2'-6⅞"	139	11'-3"	3'-3"	99	9'-4"	60	298
	18"	12	2'-9⅞"	183	13'-3"	3'-6"	114	11'-4"	73	370
	24"	15	3'-3⅞"	269	16'-3"	4'-0"	138	14'-4"	92	499
	30"	18	3'-9⅞"	372	19'-3"	4'-6"	162	17'-4"	111	645
1:4	15"	6	2'-6⅞"	83	7'-3"	3'-3"	71	5'-4"	34	188
	18"	7	2'-9⅞"	107	8'-3"	3'-6"	80	6'-4"	41	228
	24"	9	3'-3⅞"	161	10'-3"	4'-0"	97	8'-4"	53	311
	30"	11	3'-9⅞"	227	12'-3"	4'-6"	114	10'-4"	66	407

DIMENSIONS AND QUANTITIES PER U-ENDWALL

Pipe Size	G	M	D	R	P	Class I Concrete-CY	Reinforcing Steel-Lbs.	Sod SY
15"	2'-8½"	3'-7"	2'-2"	13'-0"	9'-4"	2.12	167	23
18"	2'-11½"	3'-10"	2'-5"	14'-6"	11'-4"	2.53	173	25
24"	3'-5½"	4'-4"	2'-11"	17'-6"	14'-4"	3.48	238	29
30"	3'-11½"	4'-10"	3'-5"	20'-6"	17'-4"	4.57	315	32
15"	2'-8½"	3'-7"	2'-2"	8'-8"	5'-4"	1.44	120	19
18"	2'-11½"	3'-10"	2'-5"	9'-8"	6'-4"	1.72	130	20
24"	3'-5½"	4'-4"	2'-11"	11'-8"	8'-4"	2.36	167	22
30"	3'-11½"	4'-10"	3'-5"	13'-8"	10'-4"	3.09	225	25

C:\d\projects\standards\roadway\00200-s\00295-01.dgn rd960rh 1:56:39 PM 6/28/2012

LAST REVISION	REVISION	DESCRIPTION:		FDOT DESIGN STANDARDS 2013	SAFETY MODIFICATIONS FOR ENDWALLS	INDEX NO.	SHEET NO.
07/01/07						295	1

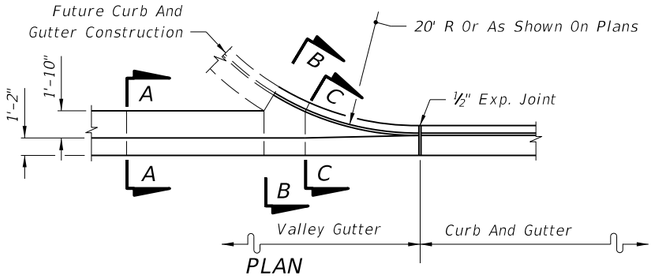

PLAN

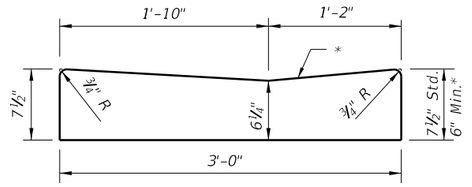

SECTION AA

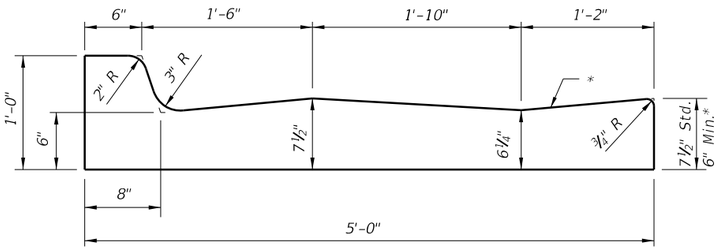

SECTION BB

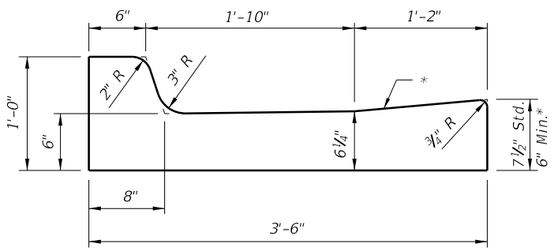

SECTION CC

VALLEY GUTTER

* When used on high side of roadways, the cross slope of the gutter shall match the cross slope of the adjacent pavement. The thickness of the lip shall be 6", unless otherwise shown on plans.

◪ Rotate entire section so that gutter cross slope matches slope of adjacent circulating roadway pavement.

For use adjacent to concrete or flexible pavement. For details depicting usage adjacent to flexible pavement, see Sheet 2. Expansion joint, preformed joint filler and joint seal are required between curb & gutter and concrete pavement only, see Sheet 2.

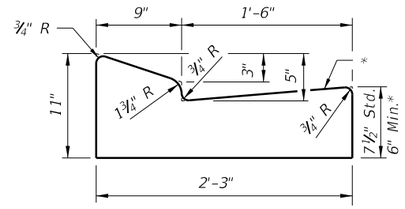

TYPE E

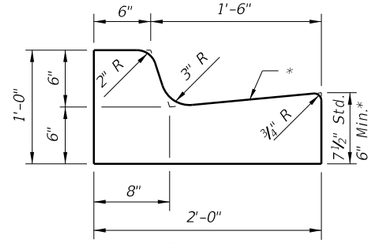

TYPE F

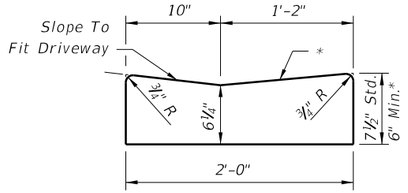

Note: To be paid for as parent curb.

DROP CURB

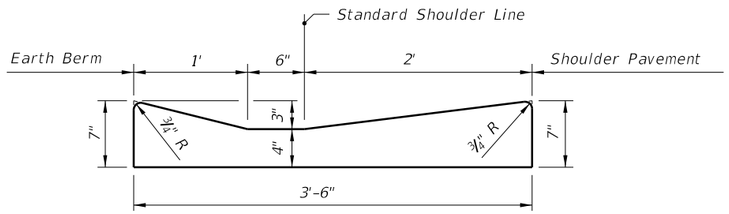

SHOULDER GUTTER

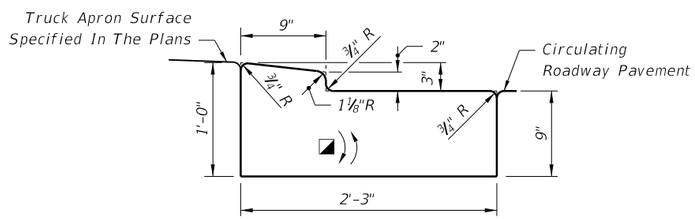

TRAFFIC BEARING SECTION FOR USE IN ROUNDABOUT CENTRAL ISLAND CONSTRUCTION

TYPE RA

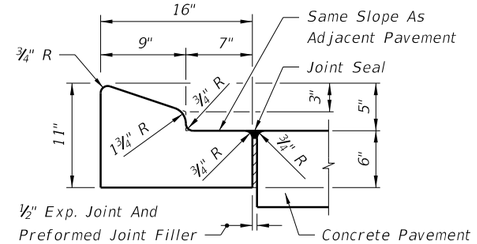

For details depicting usage adjacent to flexible pavement, see diagram right.

TYPE A

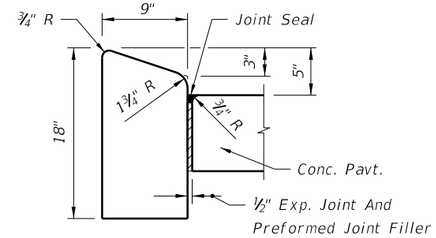

TYPE B

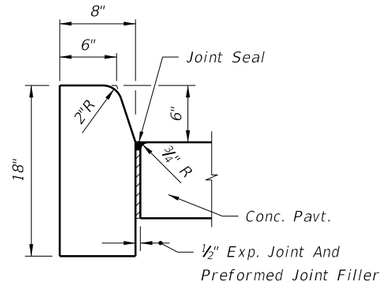

TYPE D

Note: For use adjacent to concrete or flexible pavement, concrete shown. Expansion joint, preformed joint filler and joint seal are required between curbs and concrete pavement only, see Sheet 2.

CONCRETE CURB

CONCRETE CURB AND GUTTER

LAST REVISION	REVISION	DESCRIPTION:			INDEX NO.	SHEET NO.
00			FDOT DESIGN STANDARDS 2013	CURB & CURB AND GUTTER	300	1

C:\d\projects\standards\roadway\00300-s\00300-01.dgn rd960rh 1:56:42 PM 6/28/2012

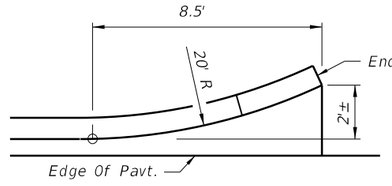

PLAN

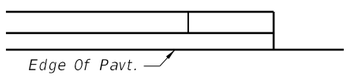

PLAN

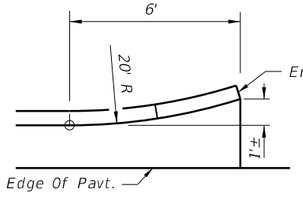

PLAN

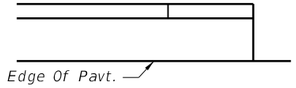

PLAN

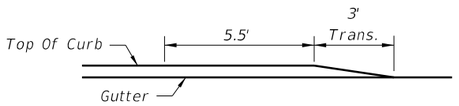

PROFILE

FLARED END

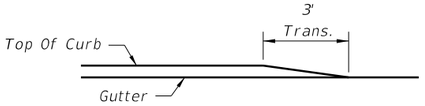

PROFILE

STRAIGHT END

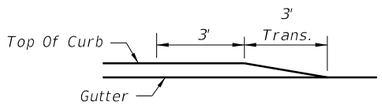

PROFILE

FLARED END

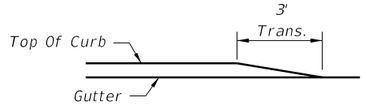

PROFILE

STRAIGHT END

CURB TYPE A

CURB AND GUTTER TYPES E & F

CURB AND GUTTER ENDINGS

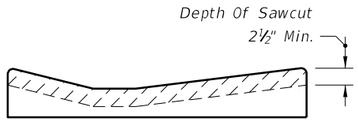

SHOULDER GUTTER

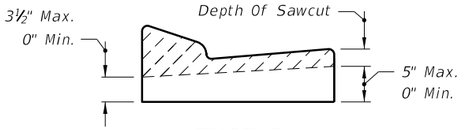

TYPE E

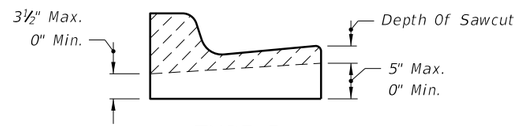

TYPE F

Sawcuts should be avoided within valley gutter and within curb and gutter endings.

CONTRACTION JOINT IN CURB AND GUTTER

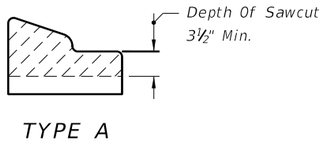

TYPE A

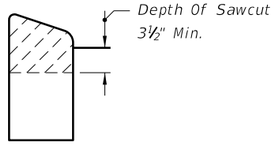

TYPE B

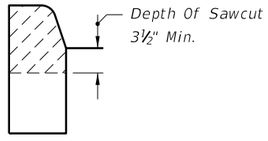

TYPE D

CONTRACTION JOINT IN CURB

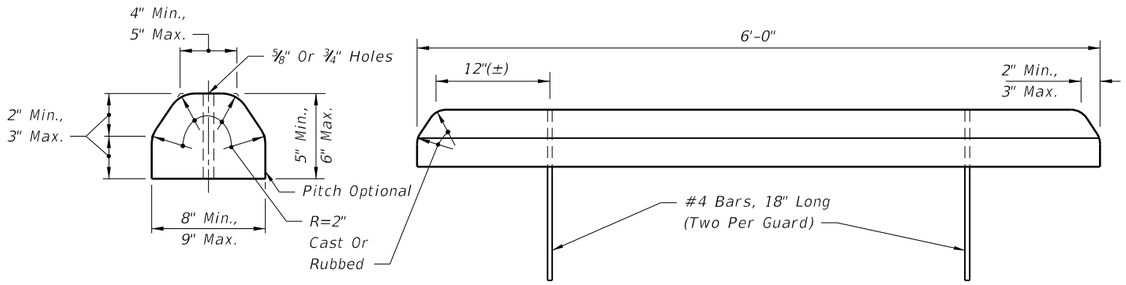

CONCRETE BUMPER GUARD

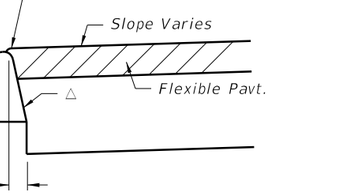

△ Applies to both high and low sides of pavement, low side shown.
Applies to shoulder gutter only where adjoining traffic lanes.

CURB AND GUTTER AND TYPE A CURB ADJACENT TO FLEXIBLE PAVEMENT

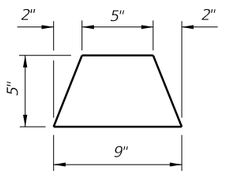

ASPHALTIC CONCRETE CURB

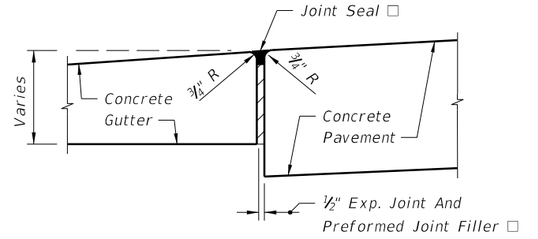

□ Applies to both high and low sides of pavement, low side shown.

EXPANSION JOINT BETWEEN GUTTER AND CONCRETE PAVEMENT

GENERAL NOTES

1. For curb, gutter and curb & gutter provide ⅛" – ¼" contraction joints at 10' centers (max.). Contraction joints adjacent to concrete pavement on tangents and flat curves are to match the pavement joints, with intermediate joints not to exceed 10' centers. Curb, gutter and curb & gutter expansion joints shall be located in accordance with Section 520 of the Standard Specifications.

2. Ends of Curbs Types B and D shall transition from full to zero heights in 3'.

6/28/2012 1:56:44 PM rd960rh C:\d\projects\standards\roadway\00300-s\00300-02.dgn

LAST REVISION	REVISION	DESCRIPTION:			INDEX NO.	SHEET NO.
00			FDOT DESIGN STANDARDS 2013	CURB & CURB AND GUTTER	300	2

TURN LANES • CURBED AND UNCURBED MEDIANS

Design Speed (mph)	Entry Speed (mph)	Clearance Distance L_1	URBAN CONDITIONS			RURAL CONDITIONS		
			Brake To Stop Distance L_2	Total Decel. Distance L	Clearance Distance L_3	Brake To Stop Distance L_2	Total Decel. Distance L	Clearance Distance L_3
35	25	70'	75'	145'	110'	———	———	———
40	30	80'	75'	155'	120'	———	———	———
45	35	85'	100'	185'	135'	———	———	———
50	40/44	105'	135'	240'	160'	185'	290'	160'
55	48	125'	———	———	———	225'	350'	195'
60	52	145'	———	———	———	260'	405'	230'
65	55	170'	———	———	———	290'	460'	270'

DESIGN NOTES

1. Basis for turn lane configurations:
   - Informed Driver.
   - Stop condition (With Or Without Stop Control).
   - Wet Pavement.
   - Reaction preceding entry point.
   - Minimum braking distance for urban conditions.
   - 75' min. for L_2.
   - Comfortable deceleration rates for rural conditions (AASHTO 2001 threshold rate of 11.2 ft./s²).

GENERAL NOTES

1. The plan views shown are for turn lane taper shapes and dimensional purposes only, they do not prescribe the use of curb, curb and gutter, shoulders nor separators specifically to either rural or urban conditions.

2. Total deceleration distances must not be reduced except where lesser values are imposed by unrelocatable control points.

3. Right turn lane tapers and distances identical to left turn lanes under stop control conditions. Right turn lane tapers and/or distances are site specific under free flow or yield conditions.

4. These left turn configurations apply to continuous left turn lanes only where specifically called for in the plans.

5. For pavement markings see Index No. 17346.

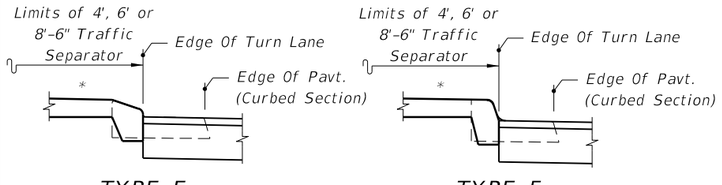

For Curb And Curb & Gutter Types, See Index No. 300

* Option I Separators Shown (Refer To Index No. 302)

MEDIAN CURB AND TRAFFIC SEPARATOR JUNCTURE DETAILS

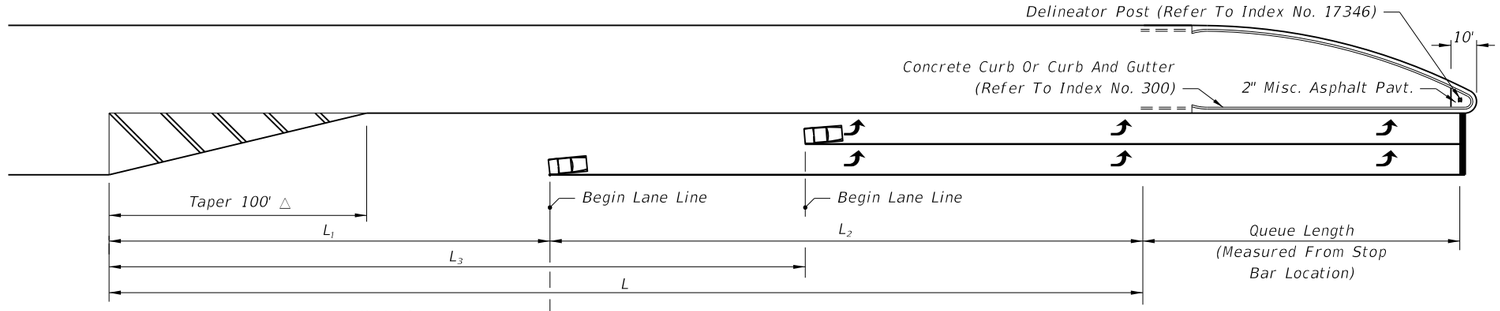

FLUSH AND/OR CURBED SEPARATION

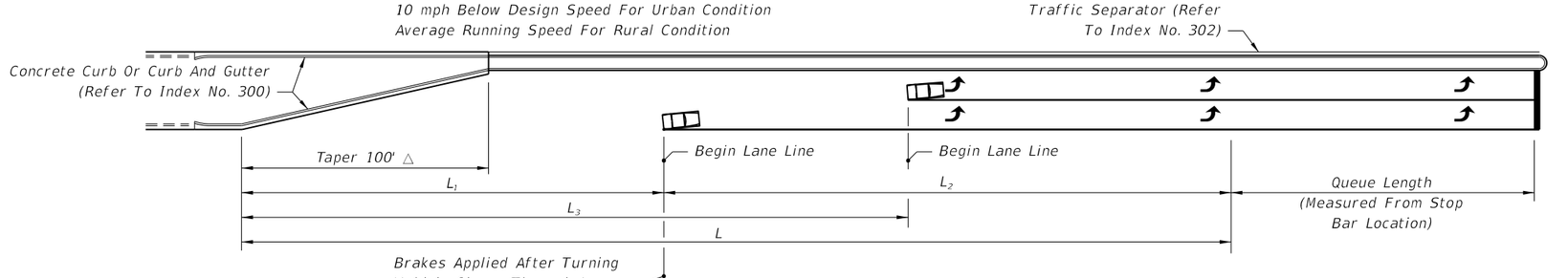

RAISED SEPARATION

DOUBLE LEFT TURNS

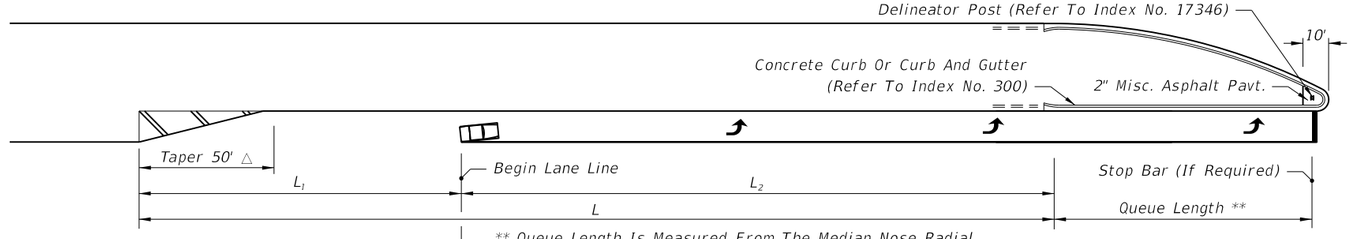

** Queue Length Is Measured From The Median Nose Radial Point Or, When A Stop Bar Is Required, From The Stop Bar.

FLUSH AND/OR CURBED SEPARATION

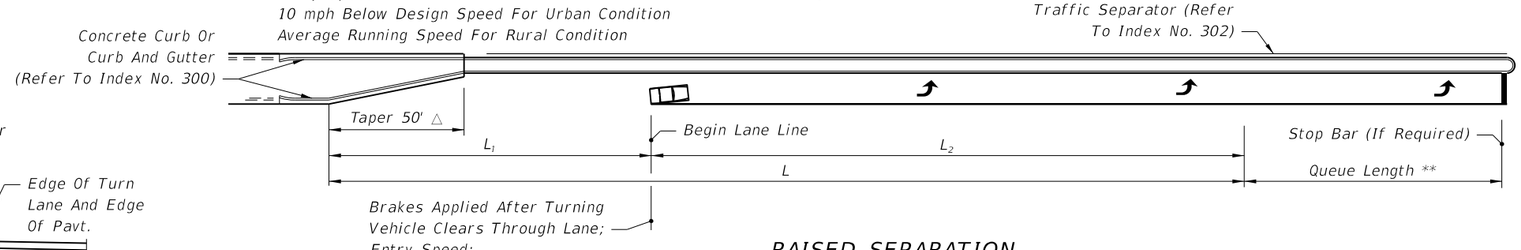

RAISED SEPARATION

SINGLE LEFT TURNS

△ The length of taper may be increased to L_1 for single left turns and L_3 for double left turns when:
- a. Left turn queue vehicles are adequately provided for within the design queue length.
- b. Through vehicle queues will not block access to left turn lane.
- c. Approved by District Design Engineer.

LAST REVISION	REVISION	DESCRIPTION:	FDOT DESIGN STANDARDS 2013	TURN LANES	INDEX NO.	SHEET NO.
07/01/05					301	1

C:\d\projects\standards\roadway\00300-s\00301-01.dgn rd960rh 1:56:46 PM 6/28/2012

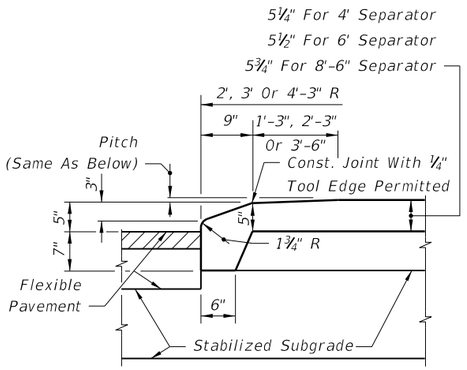

LONGITUDINAL SECTION (NOSE)

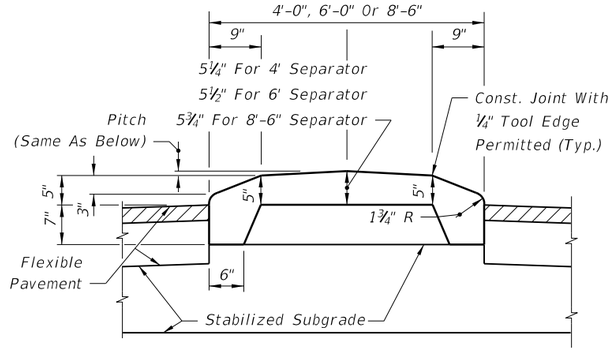

TRANSVERSE SECTION

OPTION I

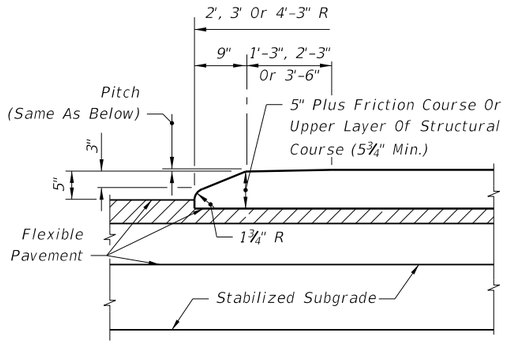

LONGITUDINAL SECTION (NOSE)

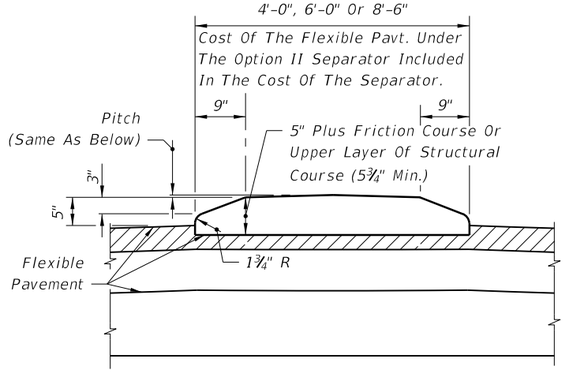

TRANSVERSE SECTION

OPTION II

TYPE I CONCRETE TRAFFIC SEPARATOR

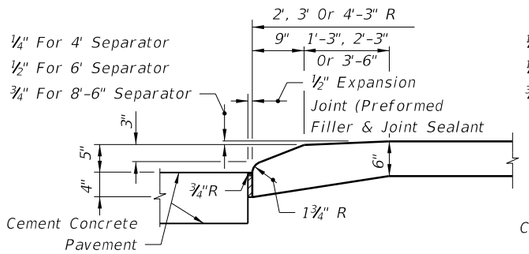

LONGITUDINAL SECTION (NOSE)

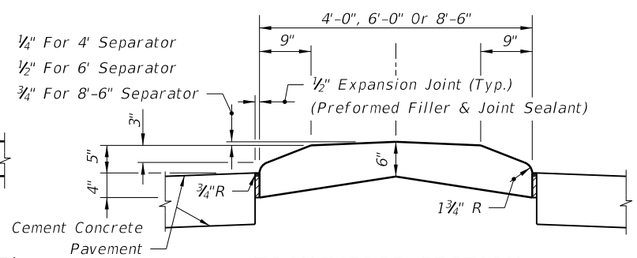

TRANSVERSE SECTION

TYPE II CONCRETE TRAFFIC SEPARATOR

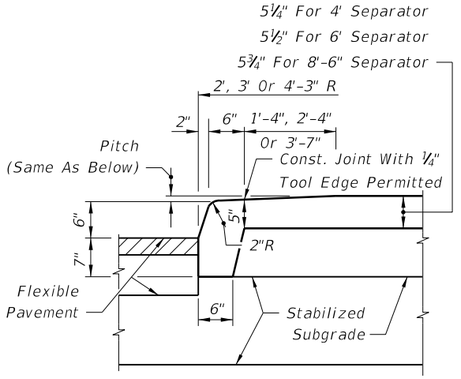

LONGITUDINAL SECTION (NOSE)

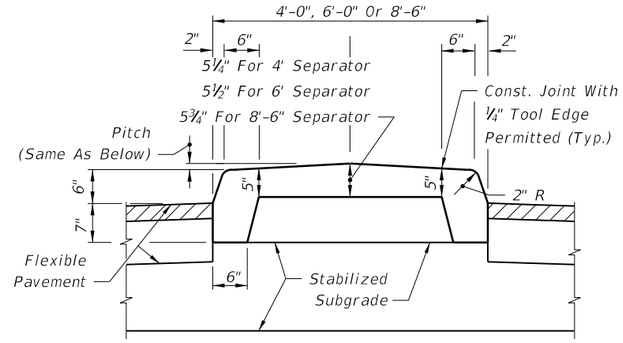

TRANSVERSE SECTION

OPTION I

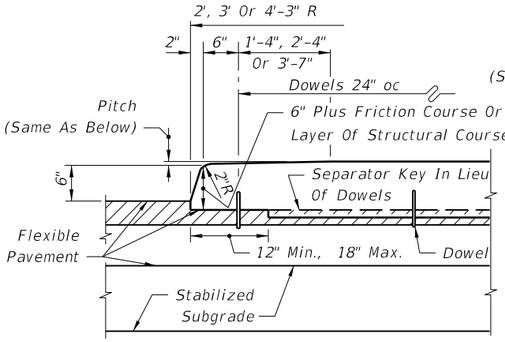

LONGITUDINAL SECTION (NOSE)

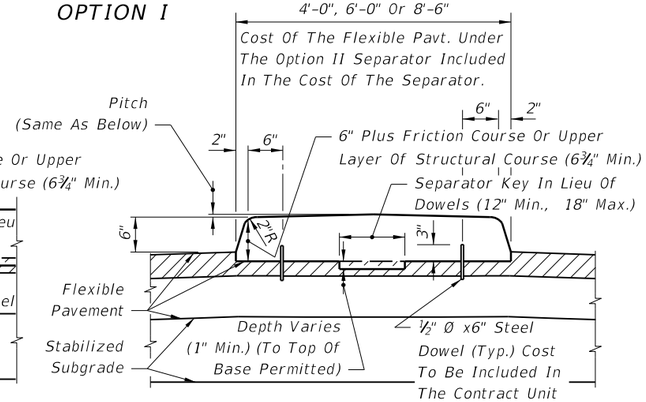

TRANSVERSE SECTION

OPTION II

TYPE IV CONCRETE TRAFFIC SEPARATOR

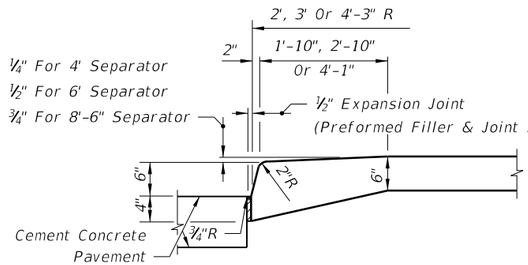

LONGITUDINAL SECTION (NOSE)

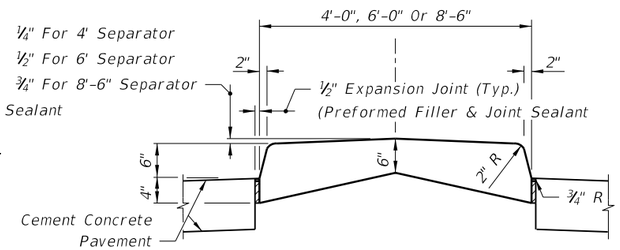

TRANSVERSE SECTION

TYPE V CONCRETE TRAFFIC SEPARATOR

NOTES

1. Separators Type I and IV are to be used with flexible pavement. Separators Types II and V are to be used with rigid pavement.
2. Either Option I or Option II may be used for Types I and IV separators except when a specific option is called for in the plans.
3. For all separators provide ⅛"- ¼" contraction joints at 10' centers (max.). Contraction joints adjacent to concrete pavement on tangents and flat curves are to match the pavement joints, with intermediate joints not to exceed 10' centers.
4. Separators having widths of 4', 6' or 8'-6" shall be paid for under the contract unit price for Concrete Traffic Separator (Type_) (_' Wide) LF. Separators having widths other than 4', 6' or 8'-6" shall be detailed in the plans as special separators and paid for under the contract unit price for Concrete Traffic Separator (Special) SY.

ROADWAY INSTALLATIONS

LAST REVISION	REVISION	DESCRIPTION:		FDOT DESIGN STANDARDS 2013	TRAFFIC SEPARATORS	INDEX NO.	SHEET NO.
07/01/07						302	1

C:\d\projects\standards\roadway\00300-s\00302-01.dgn
rd960rh
1:56:48 PM
6/28/2012

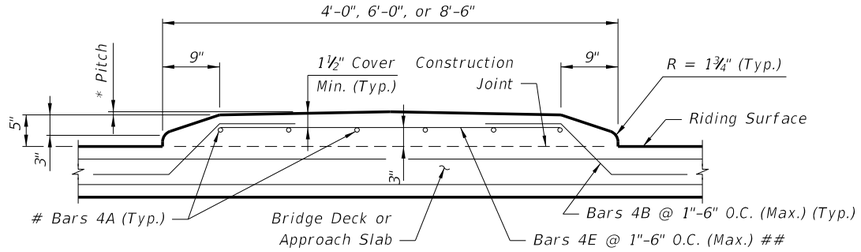

TYPICAL SECTION THRU TRAFFIC SEPARATOR
(Bridge Deck Shown, Approach Slab Similar)

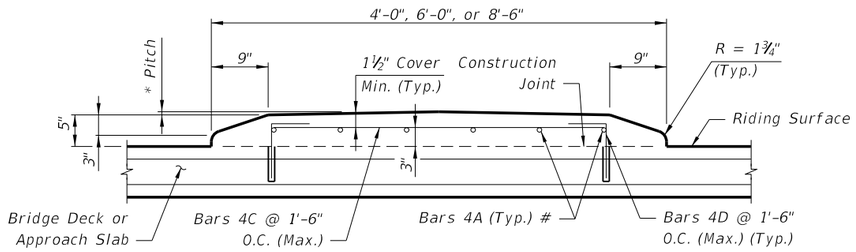

TYPICAL SECTION THRU TRAFFIC SEPARATOR
(Bridge Deck Shown, Approach Slab Similar)

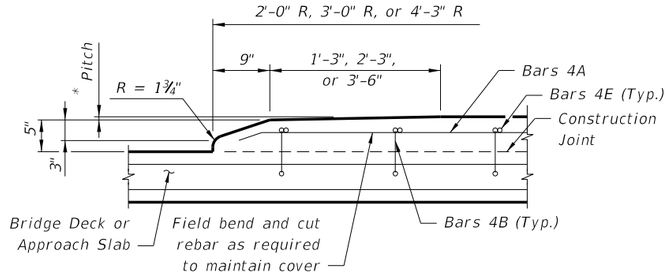

LONGITUDINAL SECTION THRU TRAFFIC SEPARATOR AT NOSE
(Bridge Deck Shown, Approach Slab Similar)

 # For 4'-0" width: Bars 4A @ 3 equal spaces (continuous).
For 6'-0" width: Bars 4A @ 5 equal spaces (continuous).
For 8'-6" width: Bars 4A @ 7 equal spaces (continuous).

At the Contractor's option a one piece bar may be substituted for Bars 4B and 4E.

** Pitch: ¼" For 4'-0" Separator*
½" For 6'-0" Separator
¾" For 8'-6" Separator

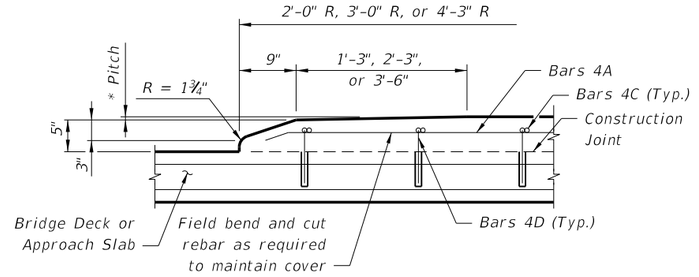

LONGITUDINAL SECTION THRU TRAFFIC SEPARATOR AT NOSE
(Bridge Deck Shown, Approach Slab Similar)

REINFORCING STEEL OPTION A

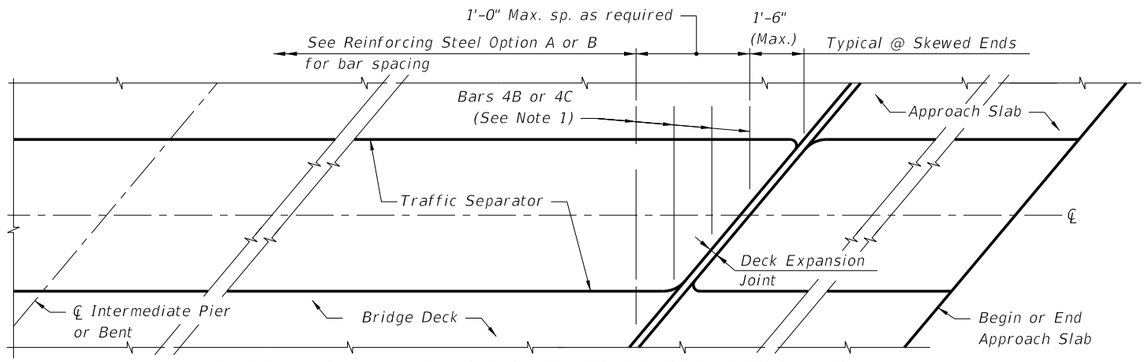

PARTIAL PLAN VIEW OF SKEWED BRIDGE DECK AND APPROACH SLAB WITH TRAFFIC SEPARATOR
(Deck Expansion Joint at Begin or End Bridge Shown, Expansion Joint at ℄ Pier or Intermediate Bents Similar)

Notes:
1. *Traffic Separator transverse reinforcement adjacent to deck expansion joints shall be field adjusted to maintain clearance and spacing. Bars shall be field cut as shown, bars may be rotated to maintain clearance.*
2. *Traffic Separator ends at deck expansion joints shall follow the deck joint limits. Drainage joints and ½" V-Grooves shall be placed perpendicular or radial to the ℄ of the Traffic Separator. See Structures Plans, Superstructure and Approach Slab Sheets for details.*
3. *See Structures Plans, Superstructure Sheets for actual dimensions and joint orientation.*

REINFORCING STEEL OPTION B (NOT PERMITTED ON BRIDGE DECKS WITH PRESTRESSING STEEL)

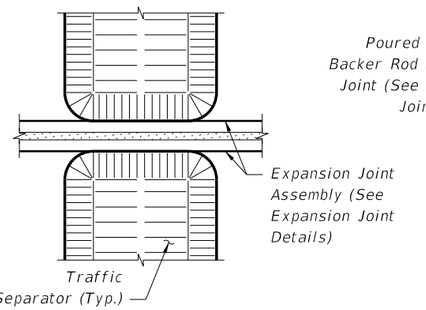

DETAIL AT EXPANSION JOINTS
(Strip Seal Shown, Other Armored Joint Types Similar)

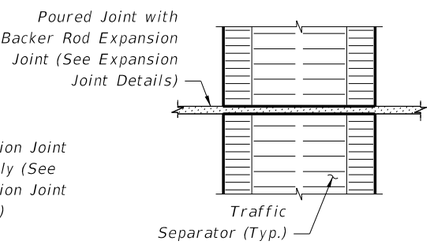

DETAIL AT POURED JOINT WITH BACKER ROD EXPANSION JOINTS

BRIDGE INSTALLATIONS - TYPE "E" CURB

C:\d\projects\standards\roadway\00300-s\00302-02.dgn rd960rh 1:56:50 PM 6/28/2012

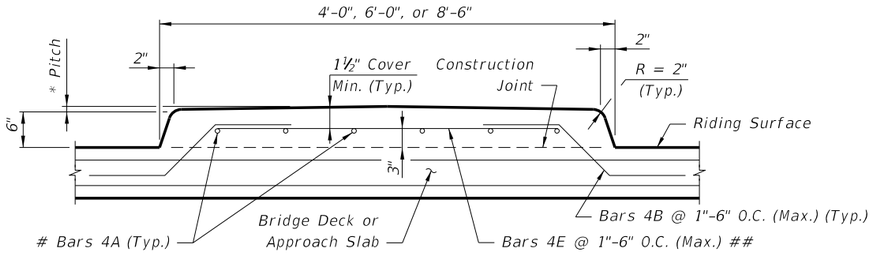

TYPICAL SECTION THRU TRAFFIC SEPARATOR
(Bridge Deck Shown, Approach Slab Similar)

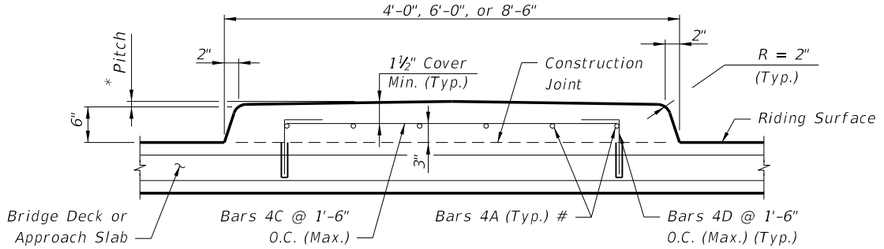

TYPICAL SECTION THRU TRAFFIC SEPARATOR
(Bridge Deck Shown, Approach Slab Similar)

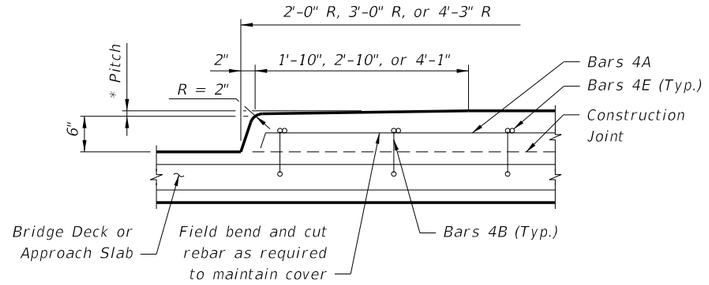

LONGITUDINAL SECTION THRU TRAFFIC SEPARATOR AT NOSE
(Bridge Deck Shown, Approach Slab Similar)

REINFORCING STEEL OPTION A

 # For 4'-0" width: Bars 4A @ 3 equal spaces (continuous).
For 6'-0" width: Bars 4A @ 5 equal spaces (continuous).
For 8'-6" width: Bars 4A @ 7 equal spaces (continuous).

At the Contractor's option a one piece bar may be substituted for Bars 4B and 4E.

** Pitch: ¼" For 4'-0" Separator*
½" For 6'-0" Separator
¾" For 8'-6" Separator

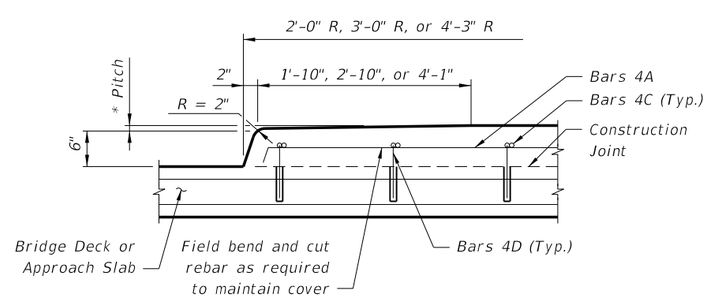

LONGITUDINAL SECTION THRU TRAFFIC SEPARATOR AT NOSE
(Bridge Deck Shown, Approach Slab Similar)

REINFORCING STEEL OPTION B (NOT PERMITTED ON BRIDGE DECKS WITH PRESTRESSING STEEL)

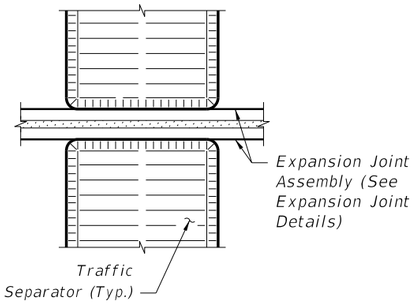

DETAIL AT EXPANSION JOINTS
(Strip Seal Shown,
Other Armored Joint Types Similar)

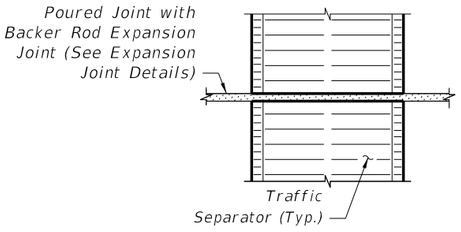

DETAIL AT POURED JOINT WITH BACKER ROD EXPANSION JOINTS

Note: Treatment of separators on straight bridges shown. For additional notes and treatment of separators on skewed bridges, see Sheet 2.

BRIDGE INSTALLATIONS - TYPE "F" CURB

LAST REVISION	REVISION	DESCRIPTION:		FDOT DESIGN STANDARDS 2013	TRAFFIC SEPARATORS	INDEX NO.	SHEET NO.
01/01/11						302	3

6/28/2012 1:56:52 PM rd960rh C:\d\projects\standards\roadway\00300-s\00302-03.dgn

CONVENTIONAL REINFORCING STEEL BENDING DIAGRAMS

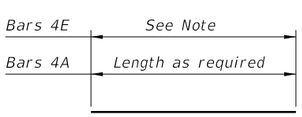

Bars 4A & 4E

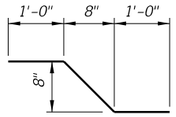

Bar 4B

Note:
Length of Bars 4E is 2'-5" for 4'-0" Separator.
Length of Bars 4E is 4'-5" for 6'-0" Separator.
Length of Bars 4E is 6'-11" for 8'-6" Separator.

REINFORCING STEEL OPTION A

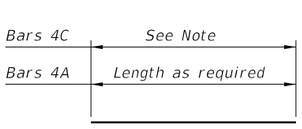

Bars 4A & 4C

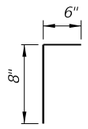

Bar 4D

Note:
Length of Bars 4C is 2'-4½" for 4'-0" Separator.
Length of Bars 4C is 4'-4½" for 6'-0" Separator.
Length of Bars 4C is 6'-10½" for 8'-6" Separator.

REINFORCING STEEL OPTION B

REINFORCING STEEL NOTES:

1. All dimensions are out to out.
2. The 8" vertical dimension shown for Bars 4B and 4D are based on a slab 8½" thick or greater without a wearing surface. If slab thickness is less than 8½", decrease this dimension by an amount equal to the difference in thickness. If a wearing surface is to be provided, increase this dimension by an amount equal to the wearing surface thickness.

ALTERNATE REINFORCING STEEL DETAILS (WELDED WIRE REINFORCEMENT)

OPTION A: Use Welded Wire Reinforcement 3 x 4 – W5.0 x W6.7 as required by plans in place of Bars 4A, 4B and 4E. Bend the Welded Wire Reinforcement to the dimensions of Bar 4B shown in the Bending Diagram for Reinforcing Steel Option A.

OPTION B: Use Welded Wire Reinforcement 3 x 4 – W5.0 x W6.7 as required by plans in place of Bars 4A and 4C shown in Reinforcing Steel Option B.

Note: Welded Wire Reinforcement shall conform to ASTM A185.

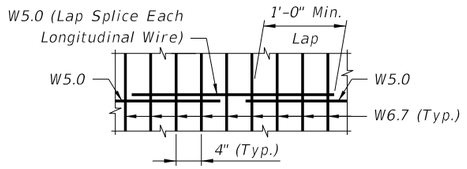

SPLICE DETAIL
(Between WWR 3 x 4 - W5.0 x W6.7 Sections)

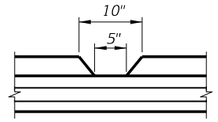

DRAINAGE JOINT DETAIL
FOR 5" OPENING OR LESS

See Structures Plans, Superstructure Sheets for location(s) of drainage joints. Locations for drainage joints shall be limited to the constant width section of separator.

NOTES:
CONCRETE: See General Notes in Structures Plans.
REINFORCING STEEL: Reinforcing Steel shall be ASTM A615 Grade 60.
PAYMENT: Separators having widths of 4'-0", 6'-0", and 8'-6" shall be paid under the contract unit price for Traffic Separator Concrete (Type II or V) (__' Wide), LF. Separators having widths other than 4'-0", 6'-0", or 8'-6" shall be detailed in the plans as special separators and paid under the contract unit price for Traffic Separator Concrete (Special), S.Y.
TRAFFIC SEPARATOR CONSTRUCTION: The Contractor may construct the separator by the use of stationary removable forms or by the use of slip forms without altering the separator dimensions shown.
½" V-GROOVES: For all separators provide ½" V-Grooves at 30'-0" centers (max.) equally spaced between expansion joints, and/or drainage joints.

ESTIMATED TRAFFIC SEPARATOR QUANTITIES

CONCRETE:
CONSTANT WIDTH OF SEPARATOR:

	TYPE "E"		TYPE "F"
4'-0"	Width = 0.056 CY per Ft.	–	0.072 CY per Ft.
6'-0"	Width = 0.089 CY per Ft.	–	0.112 CY per Ft.
8'-6"	Width = 0.132 CY per Ft.	–	0.164 CY per Ft.

NOSE:

	TYPE "E"		TYPE "F"
4'-0"	Width = 0.080 CY	–	0.109 CY
6'-0"	Width = 0.193 CY	–	0.257 CY
8'-6"	Width = 0.403 CY	–	0.536 CY

REINFORCING STEEL:
(All quantities are based on an 8½" slab.)

OPTION A:
4'-0" Width – 6.37 Lbs. per Ft.
6'-0" Width – 8.60 Lbs. per Ft.
8'-6" Width – 11.05 Lbs. per Ft.

OPTION B:
4'-0" Width – 4.77 Lbs. per Ft.
6'-0" Width – 7.00 Lbs. per Ft.
8'-6" Width – 9.45 Lbs. per Ft.

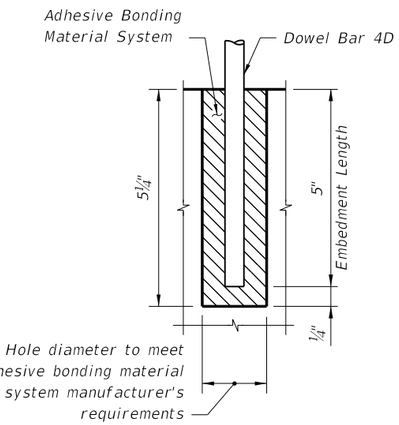

DOWEL DETAIL

Dowel Notes:
1. Shift Dowel Holes to clear if existing reinforcement is encountered.
2. Provide and install an adhesive bonding material system in accordance with Sections 416 and 937 of the Specifications.

BRIDGE INSTALLATIONS - TYPE "E" AND "F" CURBS

LAST REVISION	REVISION	DESCRIPTION:	FDOT DESIGN STANDARDS 2013	TRAFFIC SEPARATORS	INDEX NO.	SHEET NO.
07/01/07					302	4

C:\d\projects\standards\roadway\00300-s\00302-04.dgn
rd960rh
1:56:55 PM
6/28/2012

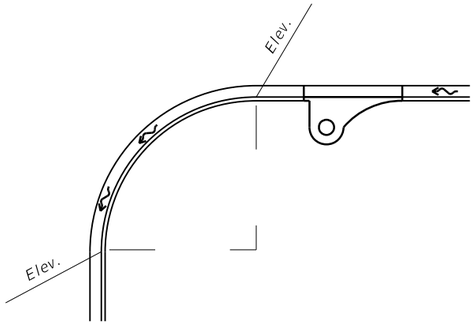

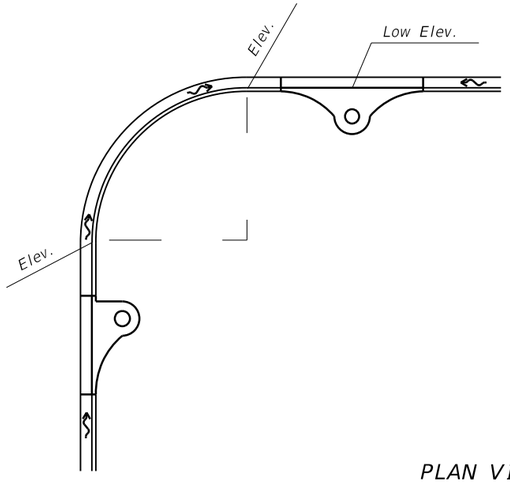

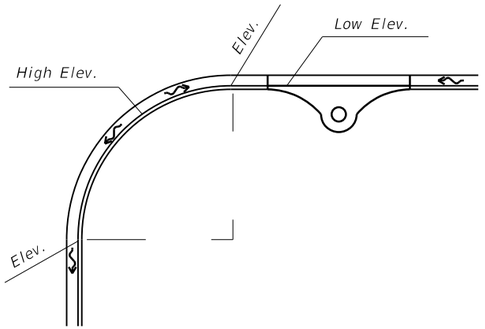

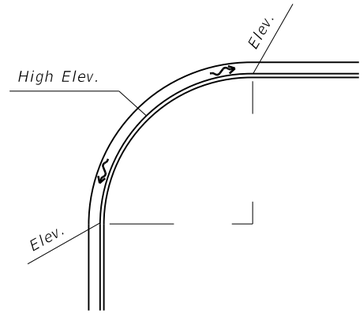

PLAN VIEW

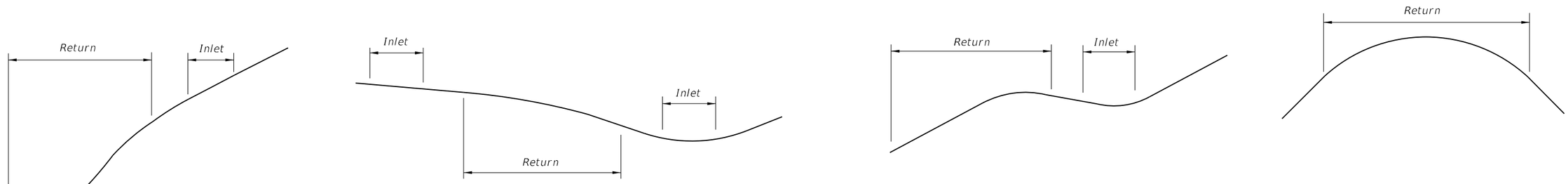

PROFILE VIEW

Note:
Profile grades should be established that will allow inlets to be located outside the return whenever practical. Inlets should be located to avoid conflict with pedestrian movement. Special care must be exercised to prevent conflict with public sidewalk curb ramps for the disabled. For information on public sidewalk curb ramps refer to Index No. 304.

SHOWING LOCATION OF INLETS AT RETURNS

TYPICAL RETURN PROFILES

6/28/2012 1:56:57 PM rd960rh C:\d\projects\standards\roadway\00300-s\00303-01.dgn

LAST REVISION	REVISION	DESCRIPTION:		FDOT DESIGN STANDARDS 2013	CURB RETURN PROFILES	INDEX NO.	SHEET NO.
01/01/12						303	1

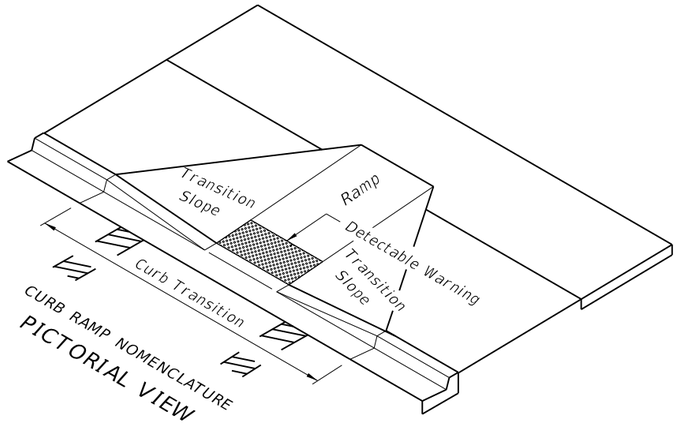

CURB RAMP NOMENCLATURE
PICTORIAL VIEW

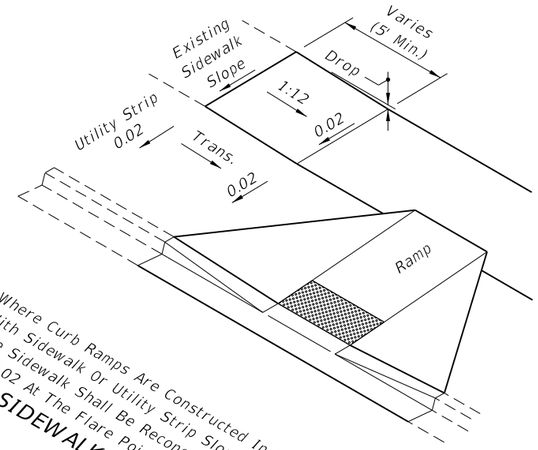

Where Curb Ramps Are Constructed In Existing Sidewalks With Sidewalk Or Utility Strip Slopes Greater Than 0.02, The Sidewalk Shall Be Reconstructed To Reduce The Slopes To 0.02 At The Flare Point.

SIDEWALK / UTILITY STRIP TRANSITION

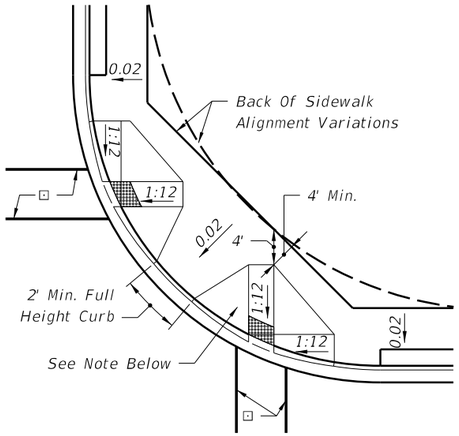

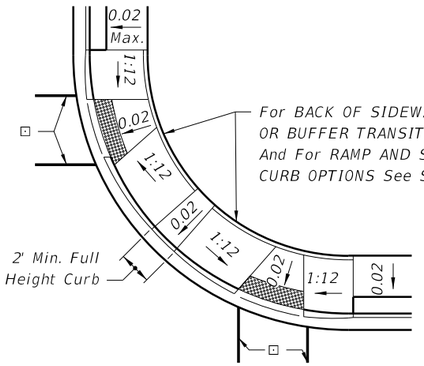

Note: A portion of one or both ramps may extend outside the return.

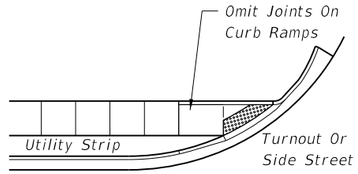

LINEAR SIDEWALK RAMPS

Note:
When crosswalk markings are required, ramp runs must fall within crosswalk limits and where practical, be parallel with the projected crosswalk alignment. The bottom of the ramp beyond the curb line shall have a clear space 48" minimum within the markings of a marked crosswalk. If no crosswalk markings are present, the bottom of the ramp beyond the curb ramp shall have a clear space 48" minimum outside active traffic lanes.

⊡ Crosswalk widths and configuration vary; must conform to Index No. 17344 and 17346.

GENERAL NOTES

1. Public sidewalk curb ramps shall be constructed in the public right of way at locations that will provide continuous unobstructed pedestrian circulation paths to pedestrian areas, elements and facilities in the public right of way and to accessible pedestrian routes on adjacent sites. Curbed facilities with sidewalks and those without sidewalks are to have curb ramps constructed at all street intersections and at turnouts that have curbed returns. Partial curb returns shall extend to the limit prescribed by Index No. 515 to accommodate curb ramps. Ramps constructed at locations without sidewalks shall have a landing constructed at the top of each ramp, see Sheet 5.

2. The location and orientation of curb ramps shall be as shown in the plans.

3. Curb ramp running slopes at unrestrained sites shall not be steeper than 1:12 and cross slope shall be 0.02 or flatter. Transition slopes shall not be steeper than 1:12.

   When altering existing pedestrian facilities where existing site development precludes the accommodation of a ramp slope of 1:12, a running slope between 1:12 and 1:10 is permitted for a rise of 6" maximum and a running slope of between 1:10 and 1:8 is permitted for a rise of 3" maximum. Where compliance with the requirements for cross slope cannot be fully met, the minimum feasible cross slope shall be provided.

   Ramp running slope is not required to exceed 8' in length, except at sites where the plans specify a greater length.

4. If a curb ramp is located where pedestrians must walk across the ramp, then the walk shall have transition slopes to the ramp; the maximum slope of the transitions shall be 1:12. Ramps with curb returns may be used at locations where other improvements provide guidance away from that portion of curb perpendicular to the sidewalk; improvements for guidance are not required at curb ramps for linear pedestrian traffic.

5. Curb ramp detectable warning surfaces shall extend the full width of the ramp and 24" deep. Detectable warning surfaces shall be constructed in accordance with Specification 527. See Sheet 6 for detectable warning layouts. Transition slopes are not to have detectable warnings. Detectable warnings are required on sidewalks at intersecting roads, streets and railroads. For requirements for detectable warnings on sidewalks at intersecting driveways, see Index 310.

6. Where a curb ramp is constructed within existing curb, curb and gutter and/or sidewalk, the existing curb or curb and gutter shall be removed to the nearest joint beyond the curb transitions or to the extent that no remaining section of curb or curb and gutter is less than 5' long. The existing sidewalk shall be removed to the nearest joint beyond the transition slope or walk around or to the extent that no remaining section of sidewalk is less than 5' long. For details of Concrete Sidewalk See Index 310.

7. Alpha-numeric identifications are for reference (plans, permits, etc.).

8. Public sidewalk curb ramps are to be paid for as follows:

   Ramps, reconstructed sidewalks, walk around sidewalks, sidewalk landings and sidewalk curbs are to be paid for under the contract unit price for Sidewalk Concrete, (__" Thick), SY. Curb transitions and reconstructed curbs are to be paid for under the contract unit price for the parent curb, i.e., Concrete Curb (Type __), LF or Concrete Curb and Gutter (Type __), LF.

   When a separate pay item for the removal and disposal of existing curb, curb and gutter, and/or sidewalk is not provided in the plans, the cost of removal and disposal of these features shall be included in the contract unit price for new curb, curb and gutter and/or sidewalk respectively.

9. Acceptance Criteria for Detectable Warnings:

   a. The ramp detectable warning surface shall be complete and uniform in color and texture
   b. 90% of the individual truncated domes must comply with the design criteria
   c. There may be no more than 4 non-complying domes in any one square foot of surface
   d. No two adjacent domes may be non-compliant
   e. Surface may not deviate more than 0.10" from a true plane

10. All sidewalk surfaces, ramp surfaces, and landings with a cross slope shown in this Index to be 0.02 shall be 0.02 maximum. All ramp surfaces and ramp transition slopes with a slope shown in this Index to be 1:12 shall be 1:12 maximum.

TYPICAL PLACEMENT OF PUBLIC SIDEWALK CURB RAMPS AT CURBED RETURNS

C:\d\projects\standards\roadway\00300-s\00304-01.dgn
rd960rh
1:56:59 PM
6/28/2012

LAST REVISION	REVISION	DESCRIPTION:				
01/01/11			FDOT DESIGN STANDARDS 2013	PUBLIC SIDEWALK CURB RAMPS	INDEX NO. 304	SHEET NO. 1

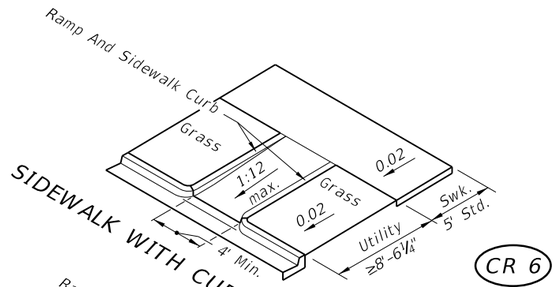

SIDEWALK WITH CURBED RETURNS

CR 6

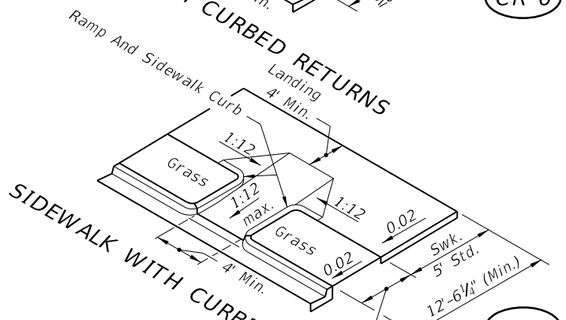

SIDEWALK WITH CURBED RETURNS

CR 7

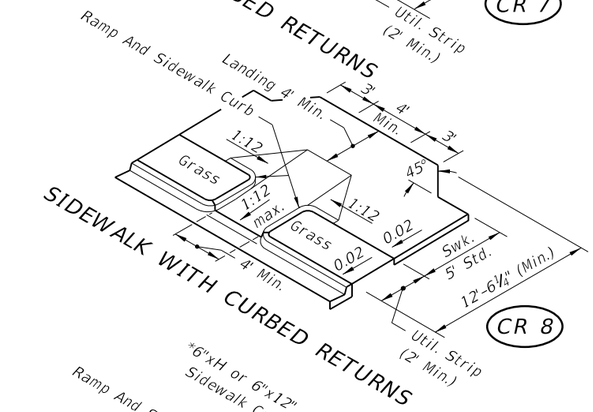

SIDEWALK WITH CURBED RETURNS

CR 8

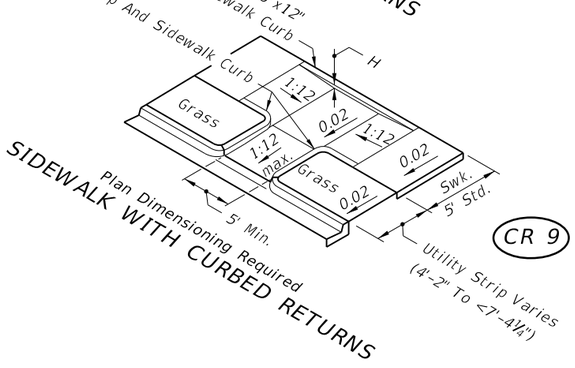

Plan Dimensioning Required

SIDEWALK WITH CURBED RETURNS

CR 9

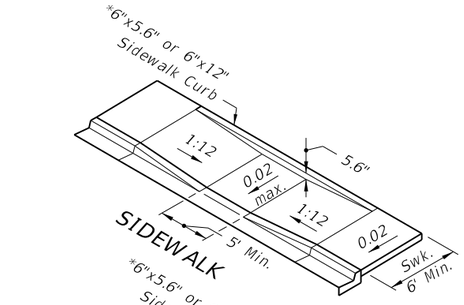

SIDEWALK

CR 3

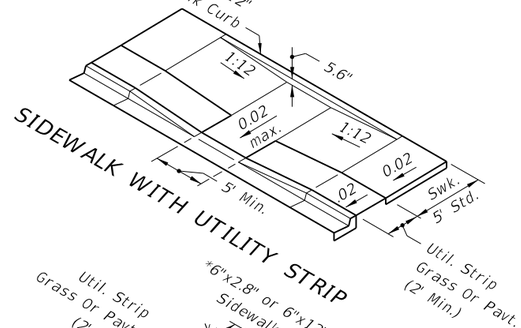

SIDEWALK WITH UTILITY STRIP

CR 4

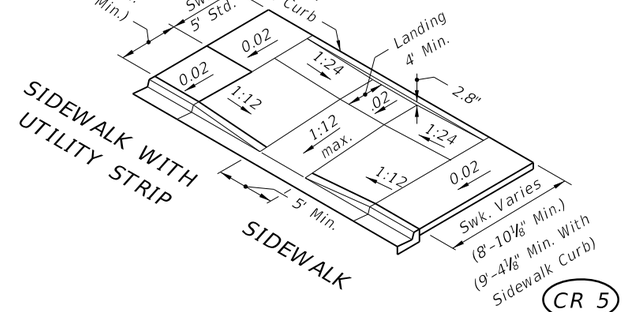

SIDEWALK WITH UTILITY STRIP

SIDEWALK

CR 5

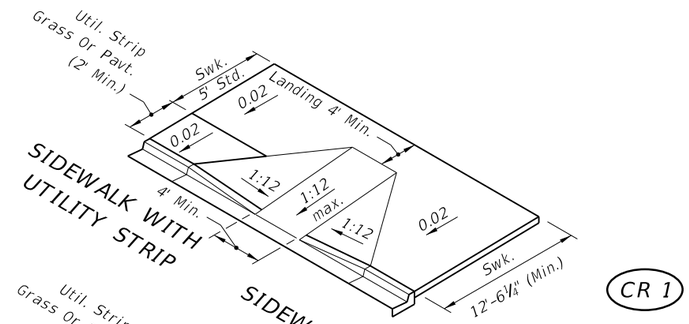

SIDEWALK WITH UTILITY STRIP

SIDEWALK

CR 1

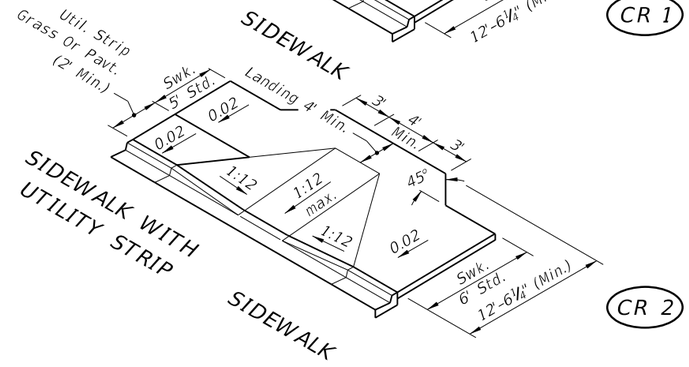

SIDEWALK WITH UTILITY STRIP

SIDEWALK

CR 2

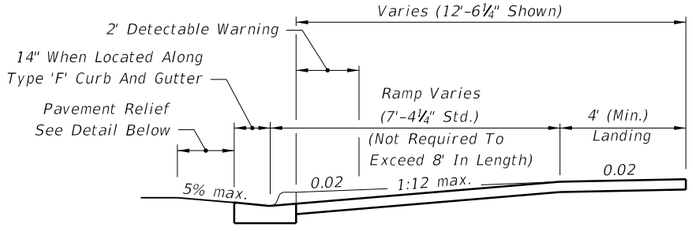

SECTION THROUGH RAMP RUN AND LANDINGS WITH UPPER LANDING AT NORMAL SIDEWALK ELEVATION

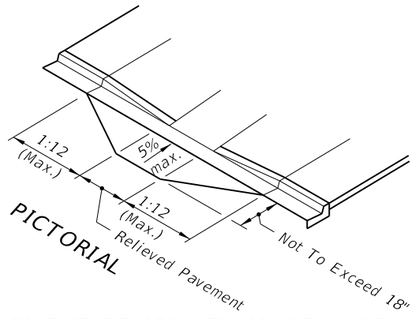

PICTORIAL

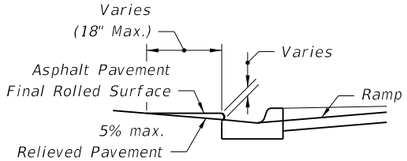

Remove Elevated Pavement By Spading And Rolling; Smooth Milling; or, Grinding

SECTION

PAVEMENT RELIEF AT LIP OF CURB

* For BACK OF SIDEWALK CURB OR BUFFER TRANSITION And For RAMP AND SIDEWALK CURB OPTIONS See Sheet 4.

DIMENSIONAL FEATURES FOR PUBLIC SIDEWALK CURB RAMPS WHERE RAMP AND LANDING DEPTH ARE NOT RESTRICTED BY RIGHT OF WAY

6/28/2012 1:57:01 PM rd960rh C:\d\projects\standards\roadway\00300-s\00304-02.dgn

LAST REVISION	REVISION	DESCRIPTION:			INDEX NO.	SHEET NO.
01/01/11			FDOT DESIGN STANDARDS 2013	PUBLIC SIDEWALK CURB RAMPS	304	2

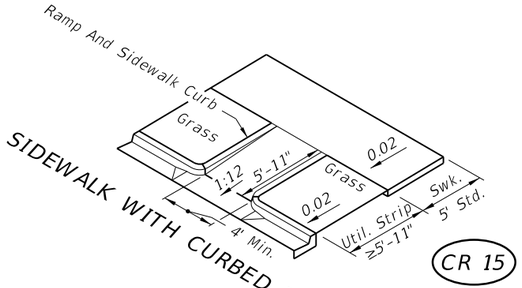

SIDEWALK WITH CURBED RETURNS

CR 15

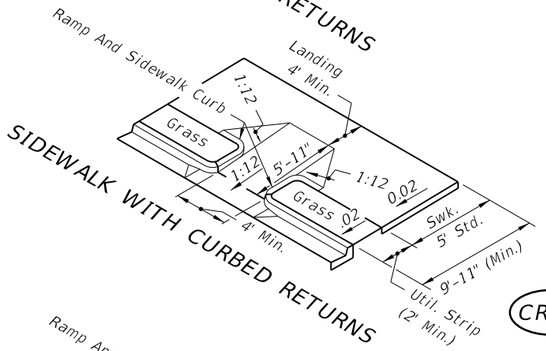

SIDEWALK WITH CURBED RETURNS

CR 16

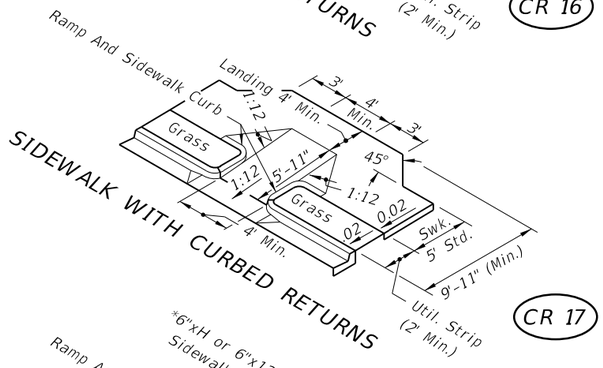

SIDEWALK WITH CURBED RETURNS

CR 17

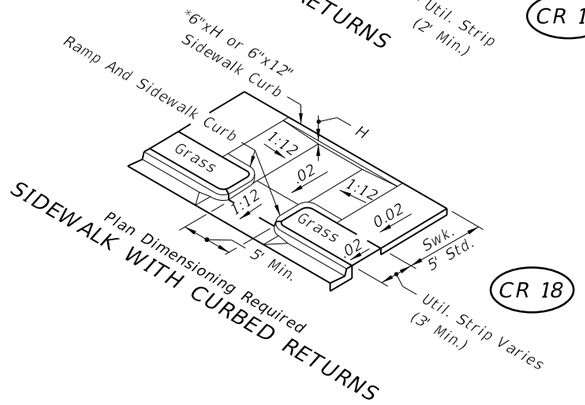

SIDEWALK WITH CURBED RETURNS

CR 18

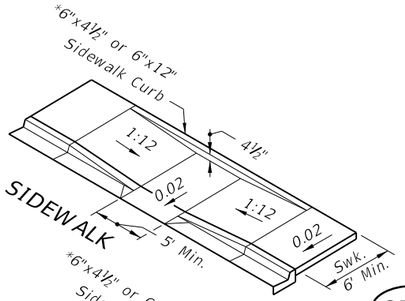

SIDEWALK

CR 12

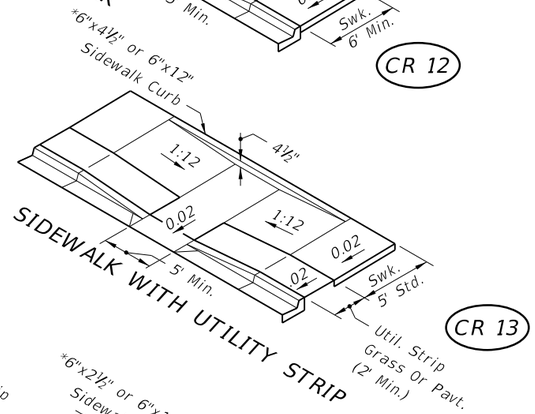

SIDEWALK WITH UTILITY STRIP

CR 13

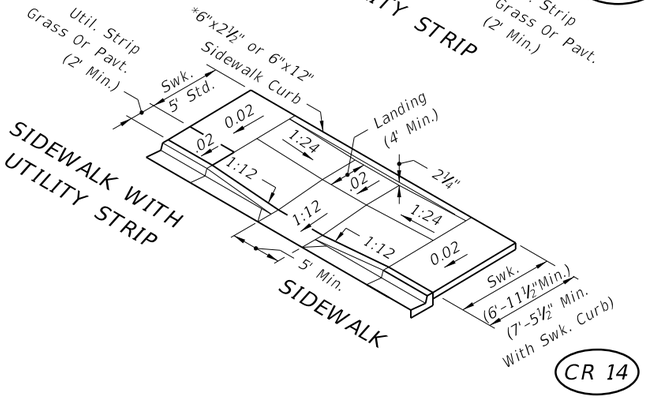

SIDEWALK WITH UTILITY STRIP

SIDEWALK

CR 14

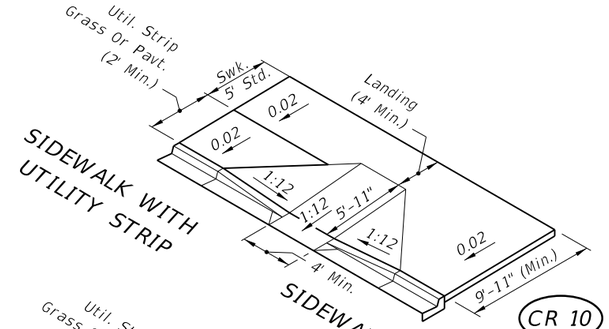

SIDEWALK WITH UTILITY STRIP

SIDEWALK

CR 10

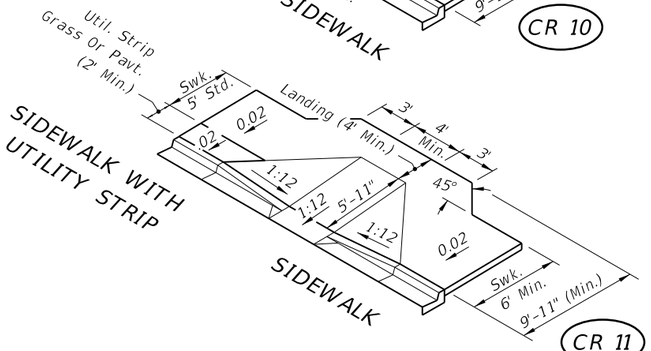

SIDEWALK WITH UTILITY STRIP

SIDEWALK

CR 11

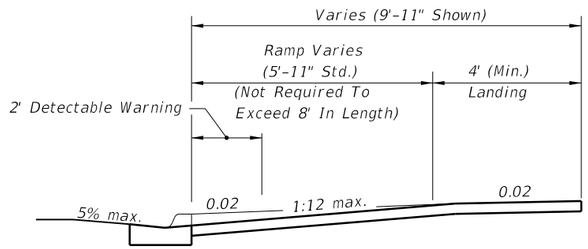

SECTION THROUGH RAMP RUN AND LANDINGS WITH UPPER LANDING AT NORMAL SIDEWALK ELEVATION

* For BACK OF SIDEWALK CURB OR BUFFER TRANSITION And For RAMP AND SIDEWALK CURB OPTIONS See Sheet 4.

DIMENSIONAL FEATURES FOR PUBLIC SIDEWALK CURB RAMPS WHERE RAMP AND LANDING DEPTH ARE RESTRICTED BY RIGHT OF WAY

C:\d\projects\standards\roadway\00300-s\00304-03.dgn
rd960rh
1:57:03 PM
6/28/2012

LAST REVISION	REVISION	DESCRIPTION:		FDOT DESIGN STANDARDS 2013	PUBLIC SIDEWALK CURB RAMPS	INDEX NO.	SHEET NO.
01/01/11						304	3

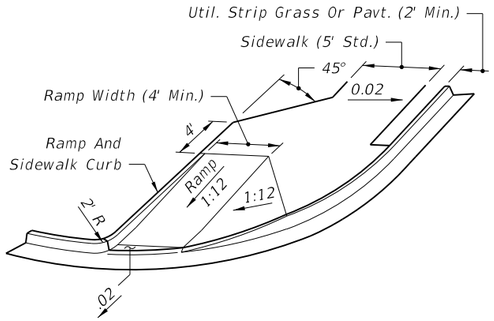

CR 25

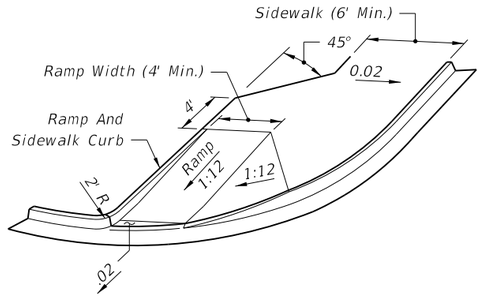

CR 24

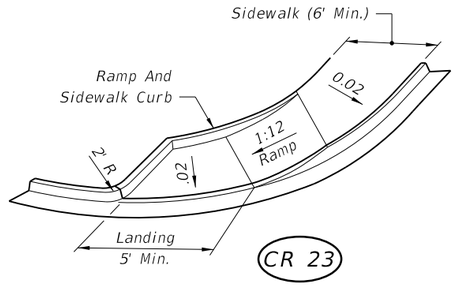

CR 23

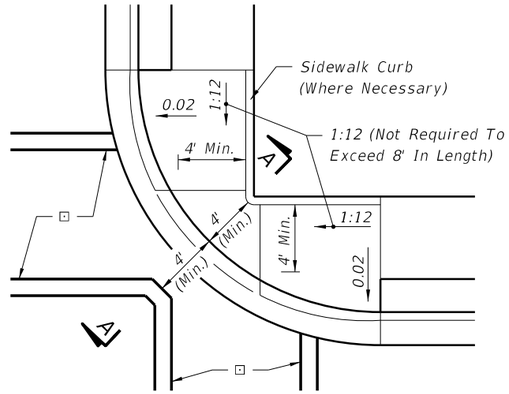

⊡ Crosswalk width and configuration vary; must conform to Index No. 17344 and 17346.

PLAN

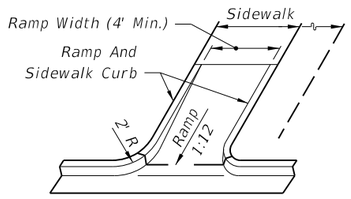

CR 22

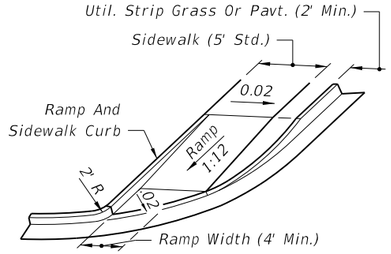

CR 21

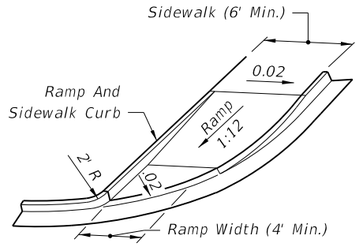

CR 20

DIMENSIONAL FEATURES FOR PUBLIC SIDEWALK CURB RAMPS FOR LINEAR PEDESTRIAN TRAFFIC

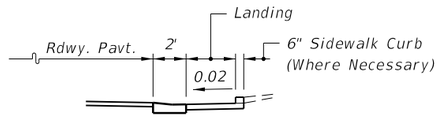

SECTION AA

CR 26

DIMENSIONAL FEATURES FOR
PUBLIC SIDEWALK COMBINED CORNER
RAMPS UNDER CONDITIONS OF INFEASIBILITY

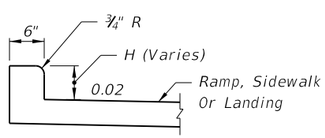

MONOLITHIC CAST CURB

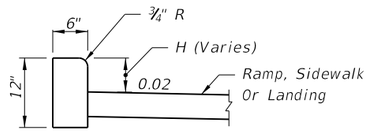

SEPARATELY CAST CURB

RAMP AND SIDEWALK CURB OPTIONS

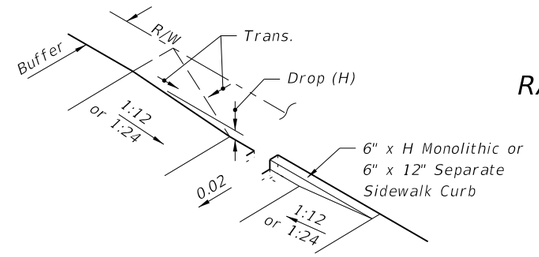

Construct Sidewalk Curb In Absence Of Adequate Buffer, Maintainable Surface Contour, Abutting Structure, Or When Called For In The Plans Or Standards

BACK OF SIDEWALK CURB
OR BUFFER TRANSITION

C:\d\projects\standards\roadway\00300-s\00304-04.dgn
rd960rh
1:57:05 PM
6/28/2012

LAST REVISION	REVISION	DESCRIPTION:			INDEX NO.	SHEET NO.
01/01/11			FDOT DESIGN STANDARDS 2013	PUBLIC SIDEWALK CURB RAMPS	304	4

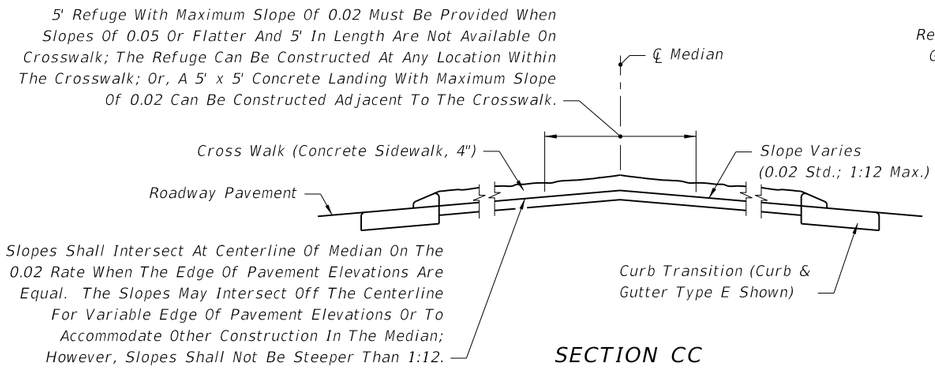

SECTION CC

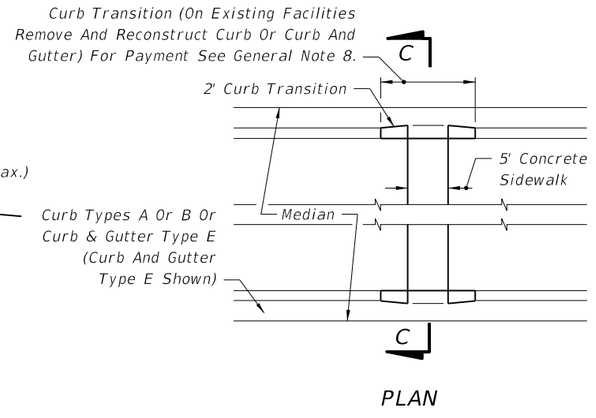

PLAN

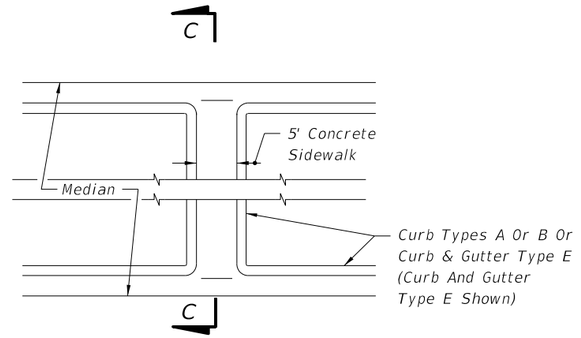

PLAN - (ALTERNATE DETAIL)

MEDIAN CROSSWALKS

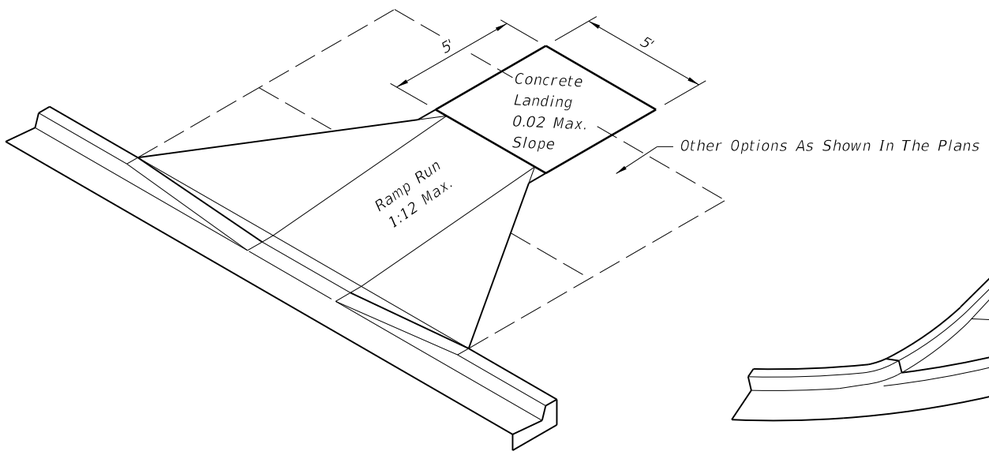

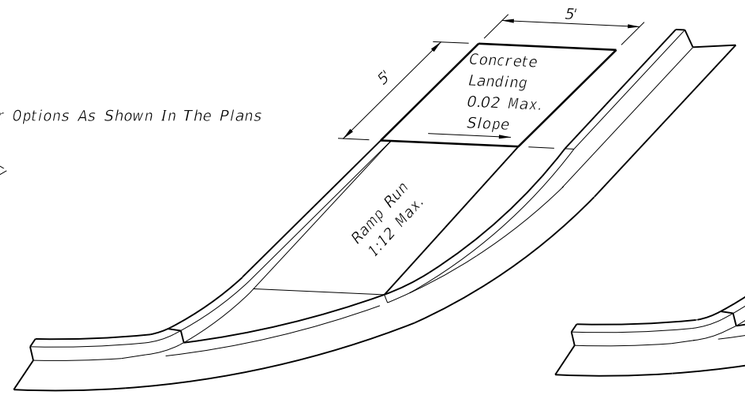

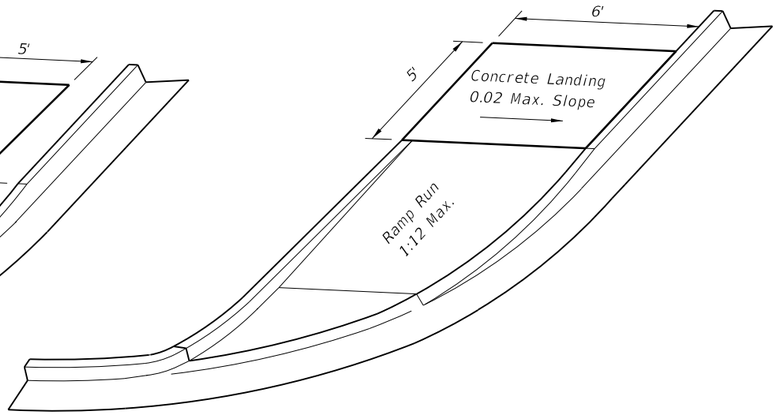

LANDINGS FOR RAMPS WITHIN PUBLIC RIGHT OF WAY CONSTRUCTED AT LOCATIONS WHERE FUTURE SIDEWALKS ARE PROPOSED, WHERE STABLE SURFACES OTHER THAN SIDEWALKS ARE PART OF A CONTINUOUS PASSAGE OR WHERE A CURB FALLS ALONG THE CIRCULATION PATH TO PEDESTRIAN ROUTES ON ADJACENT SITES

C:\d*projects*standards*roadway*00300-s*00304-05.dgn
6/28/2012 1:57:07 PM rd960rh

LAST REVISION	REVISION	DESCRIPTION:		FDOT DESIGN STANDARDS 2013	PUBLIC SIDEWALK CURB RAMPS	INDEX NO.	SHEET NO.
01/01/11						304	5

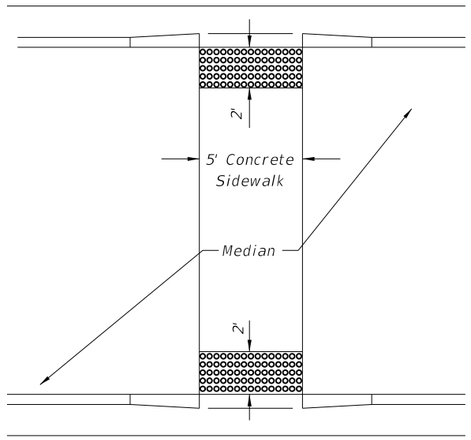

PLAN

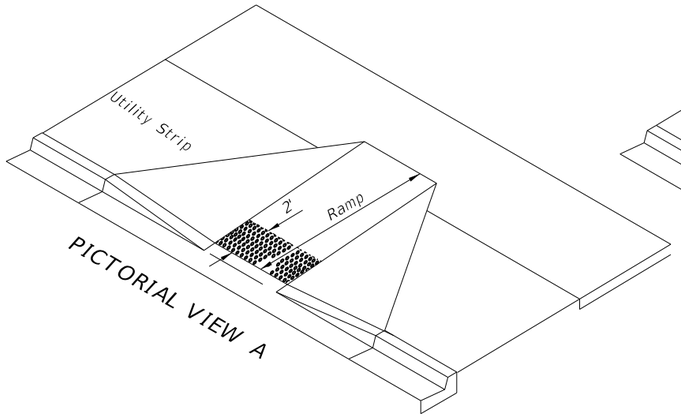

PICTORIAL VIEW A

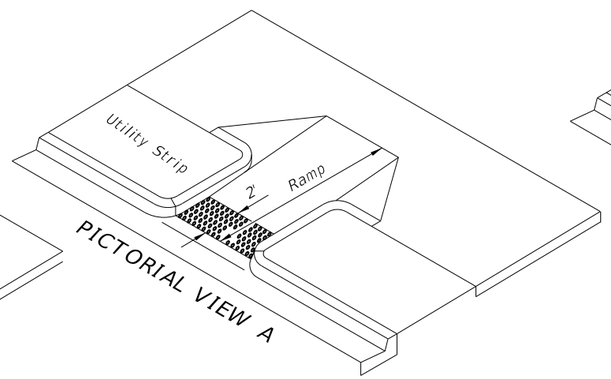

PICTORIAL VIEW A

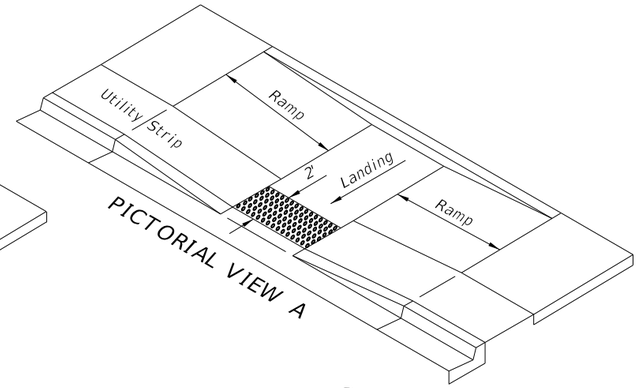

PICTORIAL VIEW A

On curb ramps, landings and flush transitions perpendicular to the curb line: Rows of domes shall be aligned with the centerline of the ramp. (See Pictorial View A)

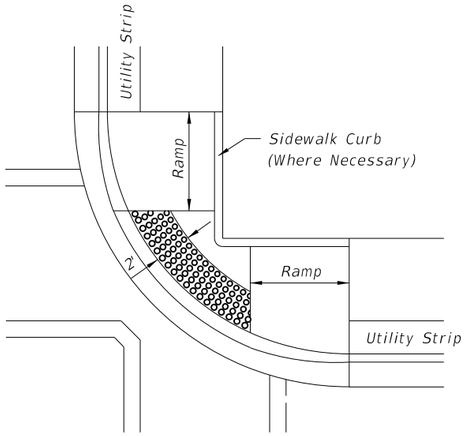

PLAN

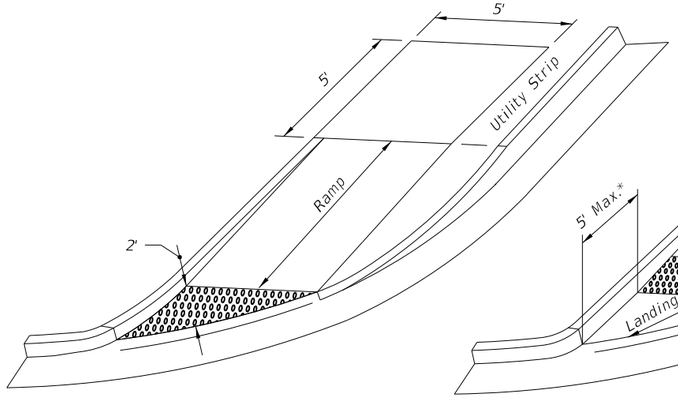

PICTORIAL VIEW B

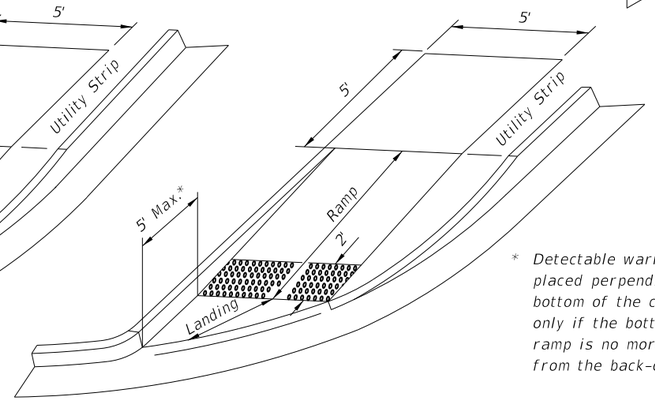

PICTORIAL VIEW C

* *Detectable warnings may be placed perpendicular across the bottom of the curb ramp, but only if the bottom of the curb ramp is no more than 5 feet from the back-of-curb.*

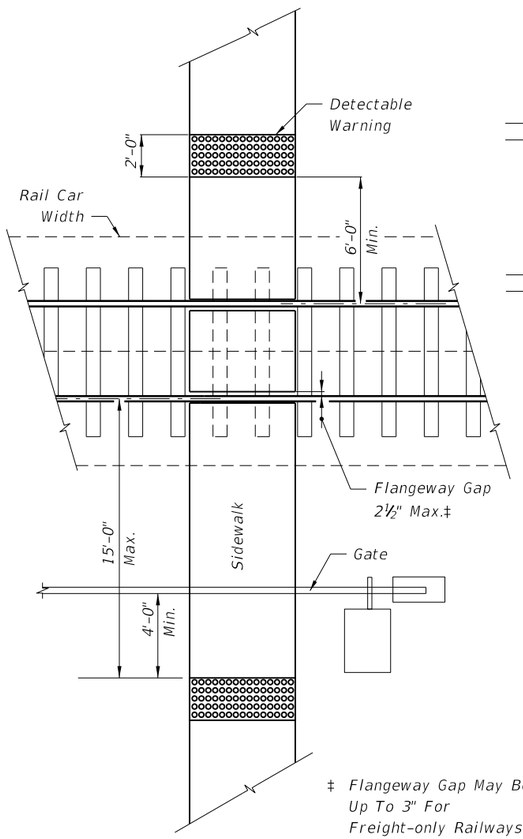

‡ *Flangeway Gap May Be Up To 3" For Freight-only Railways*

Rail Road Crossing
PLAN

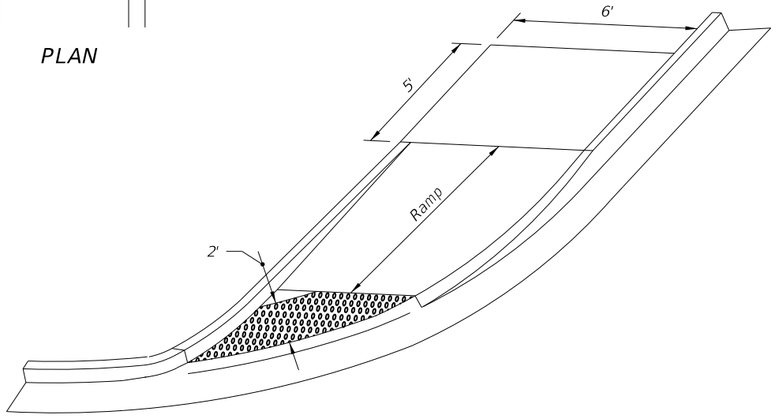

PICTORIAL VIEW B

On landings and flush transitions at radius returns: Rows of domes are not required to be aligned with the centerline of the ramp. (See Pictorial View B)

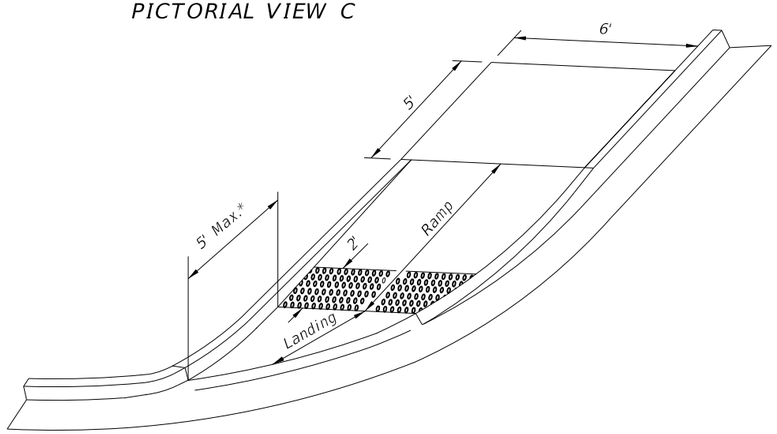

PICTORIAL VIEW C

On curb ramps at radius returns: Rows of domes shall be aligned with the centerline of the ramp. (See Pictorial View C)

TYPICAL PLACEMENT OF DETECTABLE WARNING AT CURB RAMPS

LAST REVISION	REVISION	DESCRIPTION:			INDEX NO.	SHEET NO.
07/01/12			FDOT DESIGN STANDARDS 2013	PUBLIC SIDEWALK CURB RAMPS	304	6

C:\d\projects\standards\roadway\00300-s\00304-06.dgn rd960rh 1:57:09 PM 6/28/2012

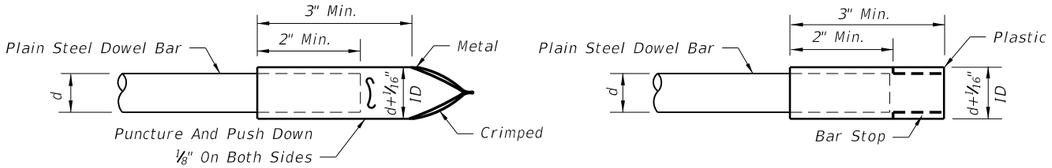

METAL OR PLASTIC CAPS FOR DOWEL BARS

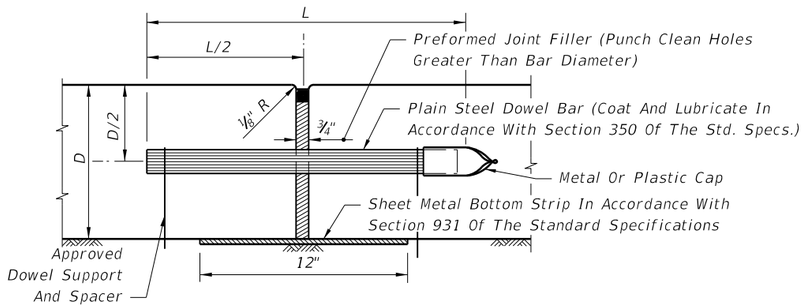

Note: Expansion joints to be placed on approaches to bridges, at street intersections and other locations indicated in detail plans.

TRANSVERSE EXPANSION JOINT

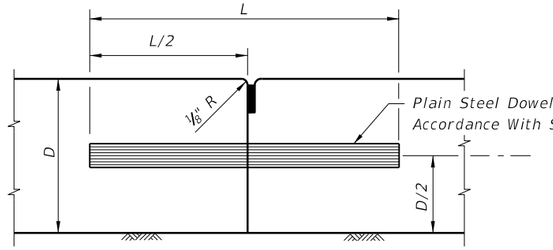

BUTT CONSTRUCTION JOINT TO BE USED AT DISCONTINUANCES OF WORK

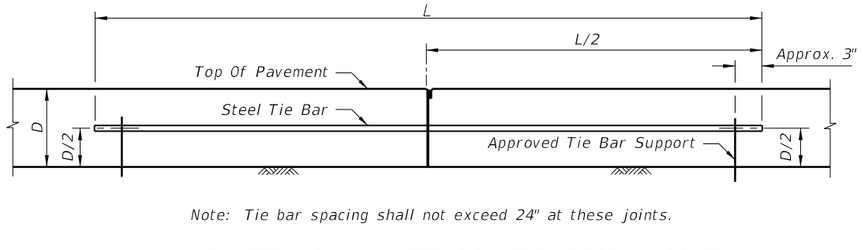

Note: Tie bar spacing shall not exceed 24" at these joints.

LONGITUDINAL BUTT CONSTRUCTION JOINT

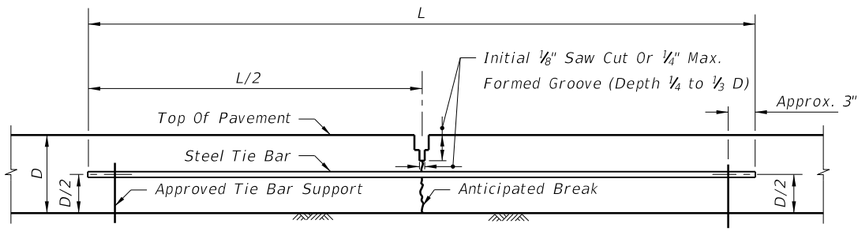

Note: Slabs poured simultaneously. Tie bars may be inserted in the plastic concrete by means approved by the Engineer.

LONGITUDINAL LANE-TIE JOINT

Tie bars are deformed #4 or #5 reinforcing steel bars meeting the requirements of Section 931 of the Standard Specifications.

Provide a standard load transfer tied joint with #4 bars 25" in length at 24" or #5 bars 30" in length at 38" spacing.

LONGITUDINAL JOINTS

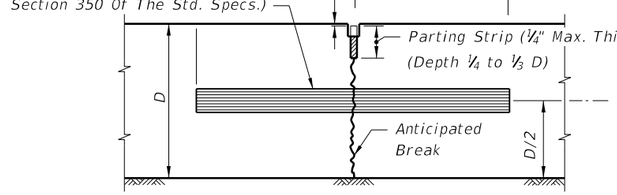

TRANSVERSE CONTRACTION JOINT, VIBRO CAST METHOD

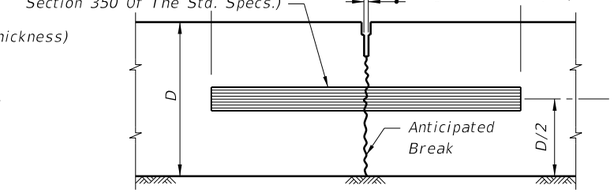

TRANSVERSE CONTRACTION JOINT, SAWED METHOD

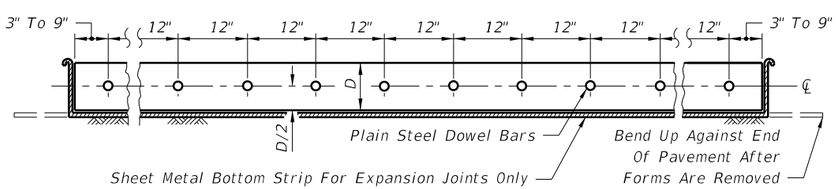

DOWEL BAR LAYOUT

DOWELS (LENGTH 18")	
Pavement Thickness "D"	Diameter
6"-6½"	¾"
7"-8½"	1"
9"-10½"	1¼"
≥11"	1½"

TRANSVERSE JOINTS ARE TO BE SPACED AT A MAXIMUM OF 15'. DOWELS ARE REQUIRED AT ALL TRANSVERSE JOINTS UNLESS OTHERWISE NOTED IN PLANS.

TRANSVERSE JOINTS

Note: For joint seal dimensions see Sheet 2.

C:\d*\projects\standards\roadway\00300-s\00305-01.dgn
rd960rh
1:57:11 PM
6/28/2012

LAST REVISION	REVISION	DESCRIPTION:			INDEX NO.	SHEET NO.
07/01/09			FDOT DESIGN STANDARDS 2013	CONCRETE PAVEMENT JOINTS	305	1

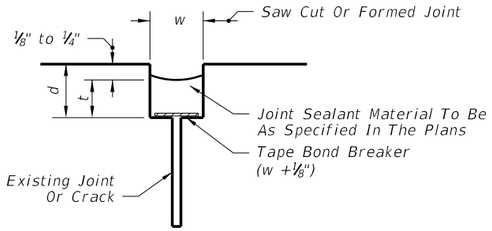

Note: Dimension w will be shown in the plans or established by the Engineer based on field conditions. Dimension d will be constructed so that the shape factor w/t has a maximum value of 2.0 and a minimum value of 1.0.

FOR REHABILITATION PROJECTS

TAPE BOND BREAKER

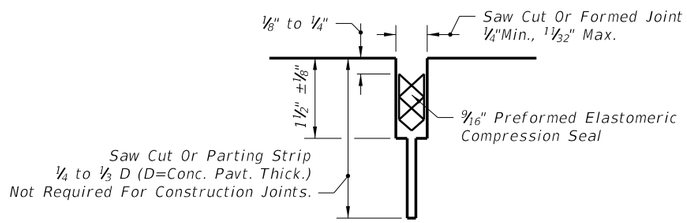

FOR NEW PROJECTS

PREFORMED ELASTOMERIC COMPRESSION SEAL

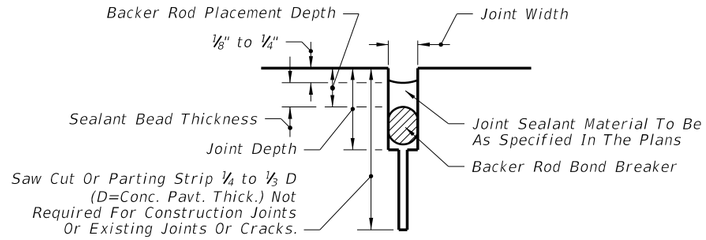

FOR NEW AND REHABILITATION PROJECTS

BACKER ROD BOND BREAKER

CONCRETE-CONCRETE JOINTS

d = w = ¾" Unless Specified Otherwise In The Plans

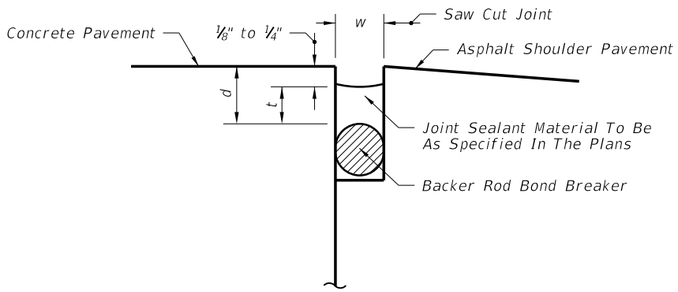

BACKER ROD BOND BREAKER

d = w = ¾" Unless Specified Otherwise In The Plans

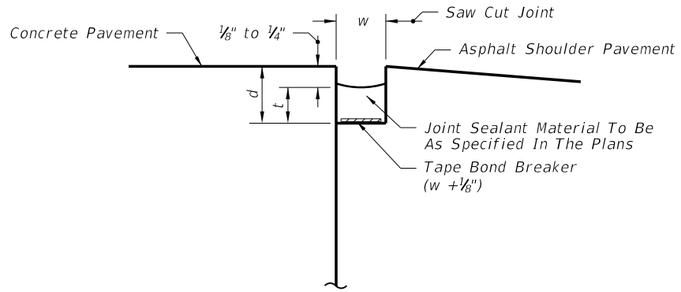

TAPE BOND BREAKER

FOR NEW AND REHABILITATION PROJECTS;
EITHER TAPE OR BACKER ROD BOND BREAKER REQUIRED;
SHOULDER MUST BE REPAIRED IF PROPER JOINT SHAPE
CAN NOT BE ATTAINED

CONCRETE-ASPHALT SHOULDER JOINTS

JOINT SEAL DIMENSIONS

BACKER ROD BOND BREAKER (CONCRETE-CONCRETE JOINTS)

JOINT DIMENSIONS (INCHES)				
JOINT WIDTH	SEALANT BEAD THICKNESS	BACKER ROD DIA.	MINIMUM JOINT DEPTH	BACKER ROD PLACEMENT DEPTH
¼	¼	⅜	1	½
⅜	¼	½	1¼	½
½	¼	⅝	1¼	½
⅝	5/16	¾	1½	9/16
¾	⅜	1	1¾	⅝
⅞	7/16	1⅛	1¾	1 1/16
1	½	1¼	2	¾
>1	½	1¼+	2+	¾

Unless otherwise indicated on the plans the joint width for new construction will be ¼" for construction joints, ⅜" for all other joints.

For rehabilitation projects the joint width will be shown on the plans or established by the Engineer based on field conditions.

C:\d\projects\standards\roadway\00300-s\00305-02.dgn
rd960rh
1:57:13 PM
6/28/2012

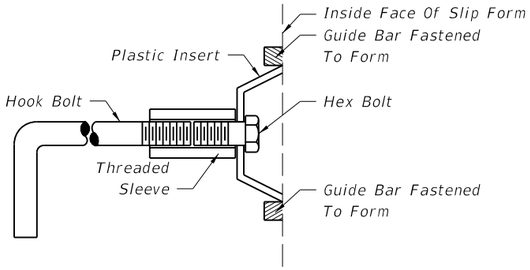

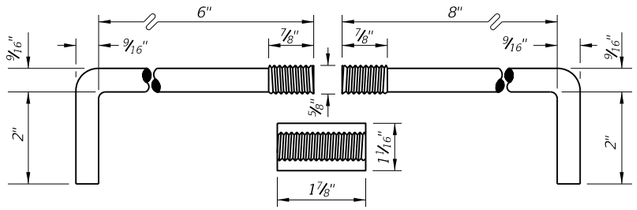

Note: After the concrete has set to the extent that the Keyway will retain its shape, the hex bolt and plastic insert shall be removed. The remaining portion of the hook bolt assembly shall be installed immediately prior to placing of concrete in the adjacent lane.

Anchor bolts shall be Grade C in accordance with ASTM A 307.

Threaded sleeves shall develop the full strength of the bolt and meet the material and thread requirements of ASTM A 563.

ALTERNATE KEYWAY AND HOOK BOLT

STEEL HOOK BOLT ASSEMBLY

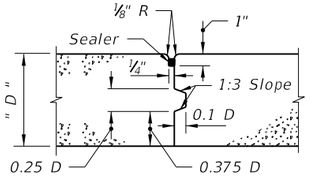

KEYED JOINT

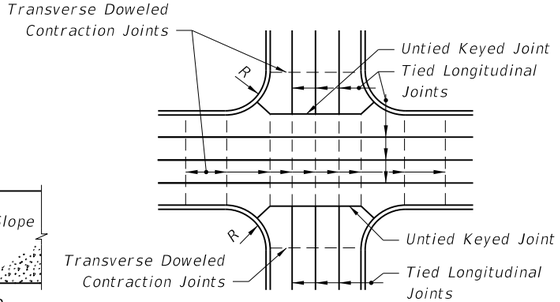

JOINT LAYOUT AT THRU INTERSECTION

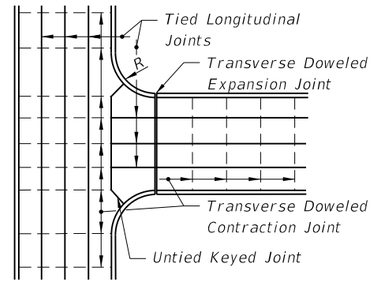

JOINT LAYOUT AT 'T' INTERSECTIONS

JOINT ARRANGEMENT

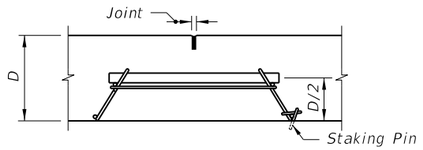

SECTION AA

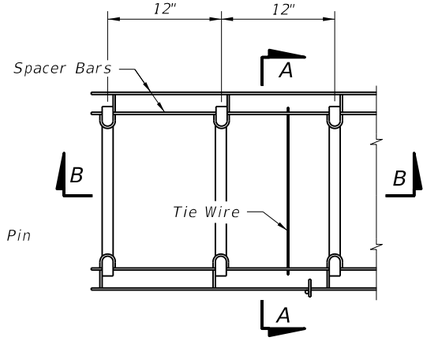

TOP VIEW

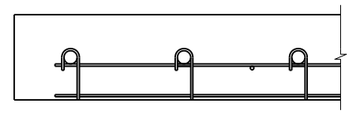

SECTION BB

CONTRACTION ASSEMBLY

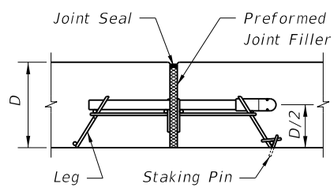

SECTION CC

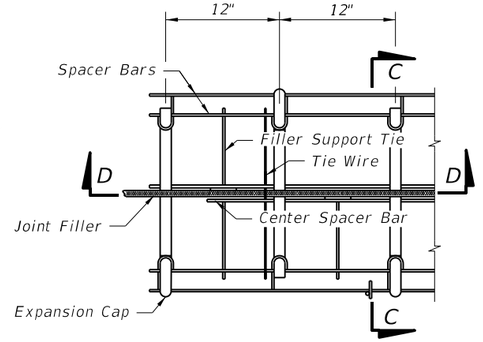

TOP VIEW

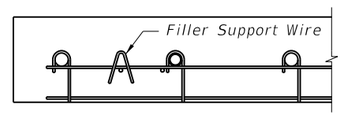

SECTION DD

EXPANSION ASSEMBLY

Note: Proprietary contraction and expansion assemblies may be used. Products shall be introduced to the State Construction Office in accordance with section (C) of the Product Evaluation Procedure.

NOTES

1. Longitudinal joints will not be required for single lane pavement 14' or less in width. For entrance and exit ramp joint details, see Sheet 4.
2. Arrangement of longitudinal joints are to be as directed by the Engineer.
3. All manholes, meter boxes and other projections into the pavement shall be boxed-in with ½" preformed expansion joint material.

C:\d_projects\standards\roadway\00300-s\00305-03.dgn
rd960rh
1:57:15 PM
6/28/2012

LAST REVISION	REVISION	DESCRIPTION:		INDEX NO.	SHEET NO.
00			FDOT DESIGN STANDARDS 2013	305	3

CONCRETE PAVEMENT JOINTS

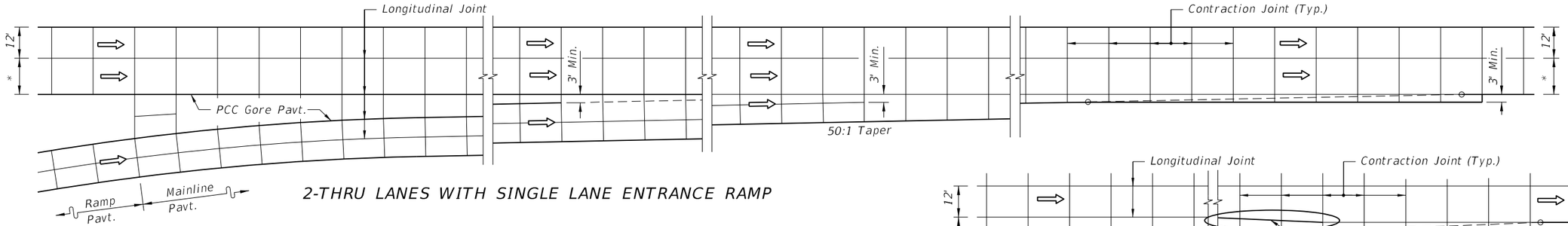

2-THRU LANES WITH SINGLE LANE ENTRANCE RAMP

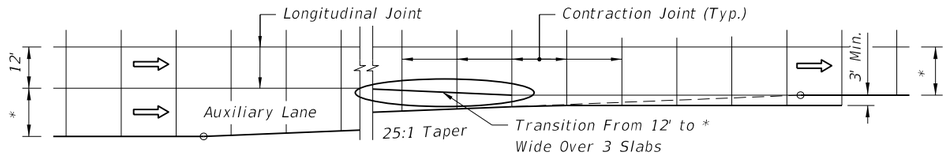

ENTRANCE TAPER WITH AUXILIARY LANE

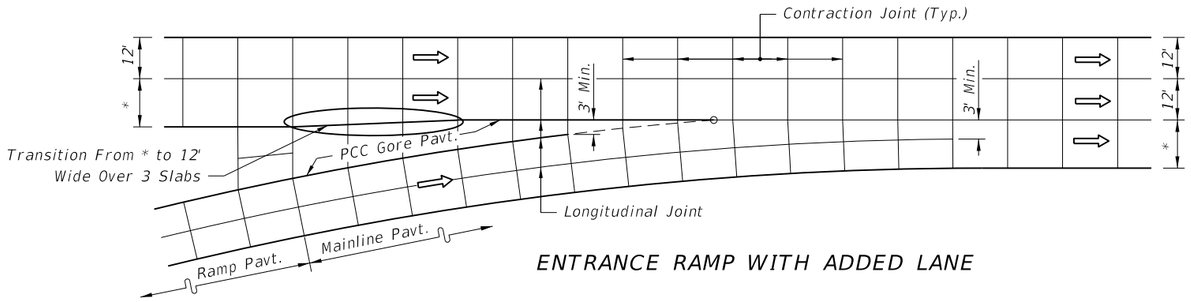

ENTRANCE RAMP WITH ADDED LANE

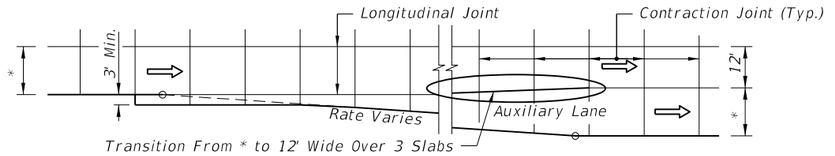

EXIT TAPER WITH AUXILIARY LANE

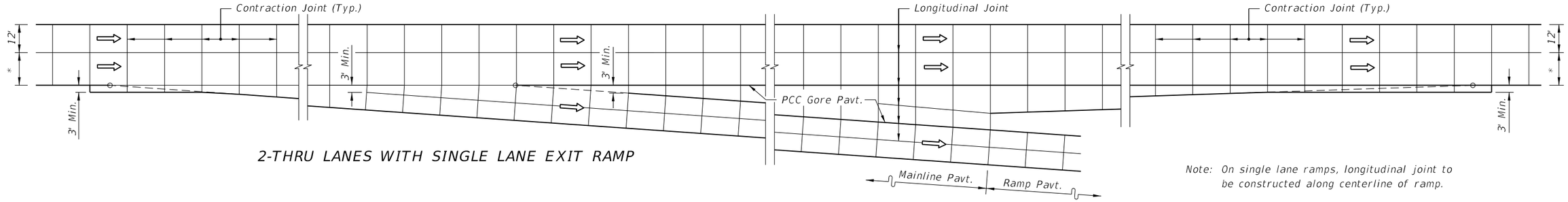

2-THRU LANES WITH SINGLE LANE EXIT RAMP

Note: On single lane ramps, longitudinal joint to be constructed along centerline of ramp.

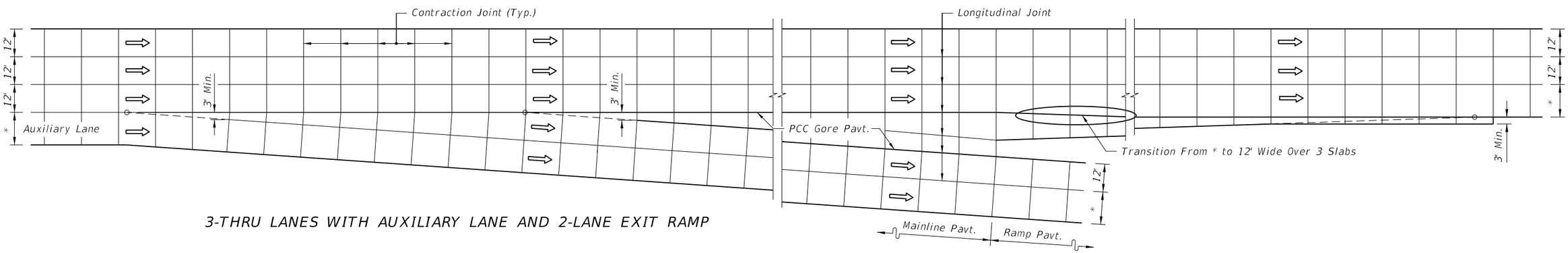

3-THRU LANES WITH AUXILIARY LANE AND 2-LANE EXIT RAMP

* 13' with tied Concrete Shoulders or 14' with Asphalt Shoulders.

JOINT LAYOUT AT ENTRANCE AND EXIT RAMP TERMINALS

C:\d\projects\standards\roadway\00300-s\00305-04.dgn
rd960rh
1:57:17 PM
6/28/2012

LAST REVISION	REVISION	DESCRIPTION:			INDEX NO.	SHEET NO.
07/01/09			FDOT DESIGN STANDARDS 2013	CONCRETE PAVEMENT JOINTS	305	4

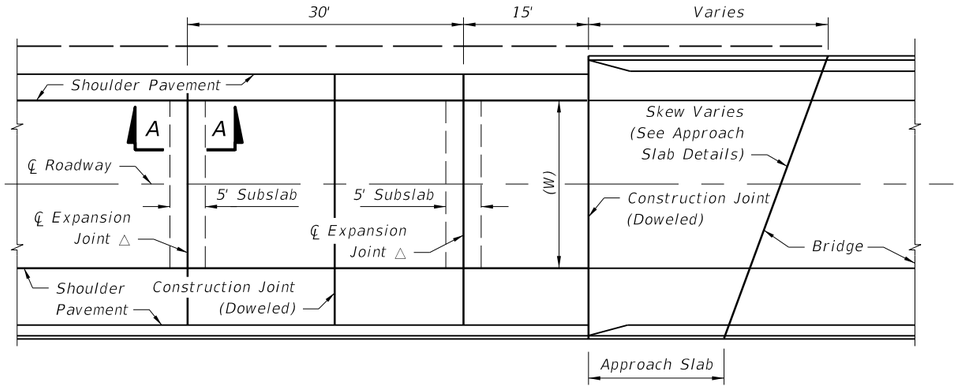

△ Expansion Joints Shall Be Constructed Parallel To The Existing Transverse Pavement Joints On Rehabilitation Projects, And Parallel To The Standard Transverse Pavement Joints Shown In The Plans For New Construction.

PLAN

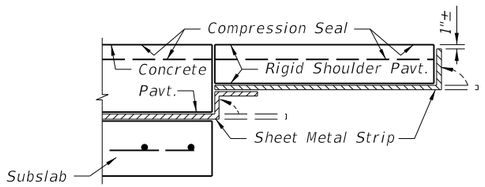

WITH RIGID SHOULDER PAVEMENT

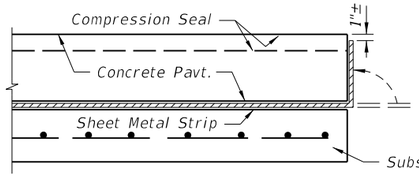

WITH GRASSED SHOULDER OR FLEXIBLE SHOULDER PAVEMENT

Note:
Immediately prior to placing the seal, the joint shall be thoroughly cleaned of all foreign material. Immediately after the seal is placed, sheet metal strip shall be bent up against the pavement edge.

The sheet metal strip shall be a minimum 16 gage steel, 12" wide and shall be galvanized in accordance with ASTM A-526, Coating Designation G90.

DETAIL SHOWING SHEET METAL STRIP

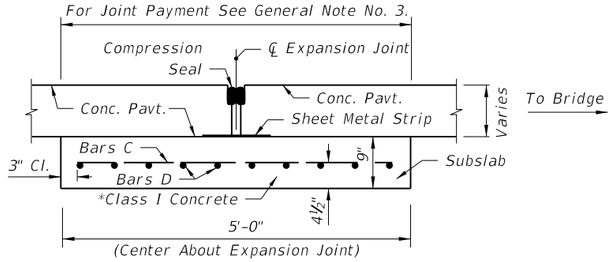

REINFORCING STEEL				
Mark	Size	Spac.	No. Req.	Length
C	5	6"	Varies	4'-6"
D	5	6"	10	W Minus 6"

* Finish surface smooth. Cure with heavy coating of wax base white pigmented curing compound. Apply second application immediately prior to placing pavement.

SECTION AA

EXPANSION JOINT

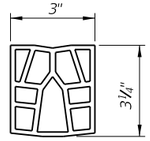

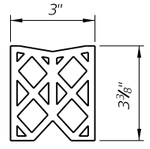

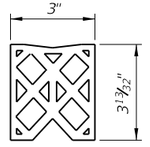

OPTIONAL SEALS

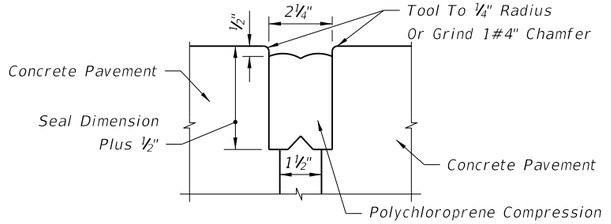

Note: All contacting surfaces between the compression seal and concrete shall be thoroughly coated with a lubricant-adhesive.

JOINT DIMENSIONS

COMPRESSION SEAL DETAIL

DESIGN NOTES

1. For rehabilitation projects, the designer must indicate in the plans the number of slabs to be removed, the number of subslabs to be constructed/reconstructed, and the location of expansion joints.

2. Pay quantity of expansion joint to be calculated across pavement at right angles to the centerline of the roadway pavement. Shoulder pavement joint included.

GENERAL NOTES

1. The centerline of roadway and the centerline of bridge do not necessarily coincide. Prior to the placement of the expansion joint, the centerline of the roadway pavement shall be determined.

2. For information on other types of concrete pavement joints see Index No. 305.

3. Pay quantity for expansion joint is the length of joint to be constructed across the roadway and shoulder pavements, measured at right angles to the centerline of the roadway. Payment for expansion joint shall be full compensation for joint construction, including reinforced concrete subslab, sheet metal strip and compression seal, but, not including roadway pavement reconstruction associated with joint replacement or reconstruction. Expansion joint to be paid for under the contract unit price for Bridge Approach Expansion Joint, LF.

C:\d\projects\standards\roadway\00300-s\00306-01.dgn
rd960rh
1:57:19 PM
6/28/2012

LAST REVISION	REVISION	DESCRIPTION:				
04			FDOT DESIGN STANDARDS 2013	BRIDGE APPROACH EXPANSION JOINT CONCRETE PAVEMENT	INDEX NO. 306	SHEET NO. 1

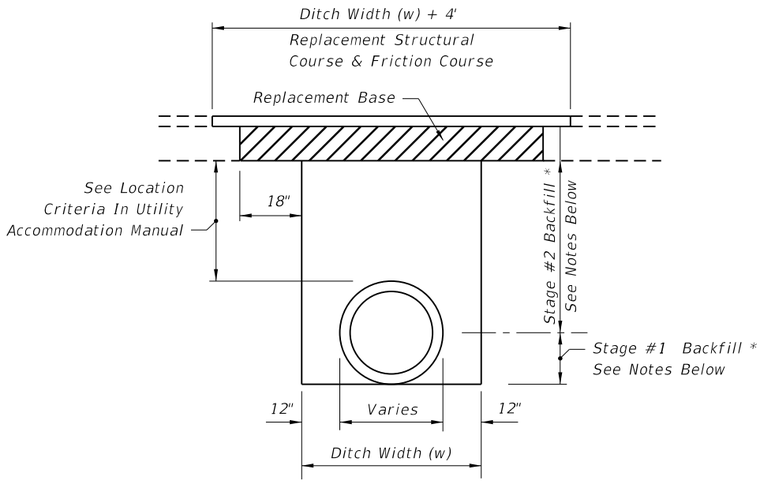

FLEXIBLE PAVEMENT NOTES

PAVEMENT REMOVAL AND REPLACEMENT

Pavement shall be mechanically sawed.

The replacement asphalt shall match the existing structural and friction courses for type and thickness in accordance with current FDOT asphalt mix specifications.

The new base materials shall be either of the same type and composition as the materials removed or of equal or greater structural adequacy (See Index No. 514).

BACKFILL

COMPACTED AND STABILIZED FILL OPTION

Backfill material shall be placed in accordance with Section 125 of the Standard Specifications.

In Stage #1, construct compacted fill beneath the haunches of the pipe, using mechanical tamps suitable for this purpose. This compaction applies to the material placed beneath the haunches of the pipe and above any bedding.

In Stage #2, construct compacted fill along the sides of the pipe and up to the bottom of the base,with the upper 12" receiving Type B Stabilization. In lieu of Type B Stabilization, the Contractor may construct using Optional Base Group 3.

* FLOWABLE FILL OPTION

If compaction can not be achieved through normal mechanical methods then flowable fill may be used.

Flowable fill is to be placed in accordance with Section 121 of the Specifications, as approved by the Engineer.

Do not allow the utility being installed to float. If a method is provided to prevent flotation from occurring, Stages #1 and #2 can be combined, if approved by the Engineer.

In Stage #1, place flowable fill midway up on both sides of the utility. Allow to harden before placing Stage #2.

In Stage #2, place flowable fill to the bottom of the existing base course.

FLEXIBLE PAVEMENT CUT

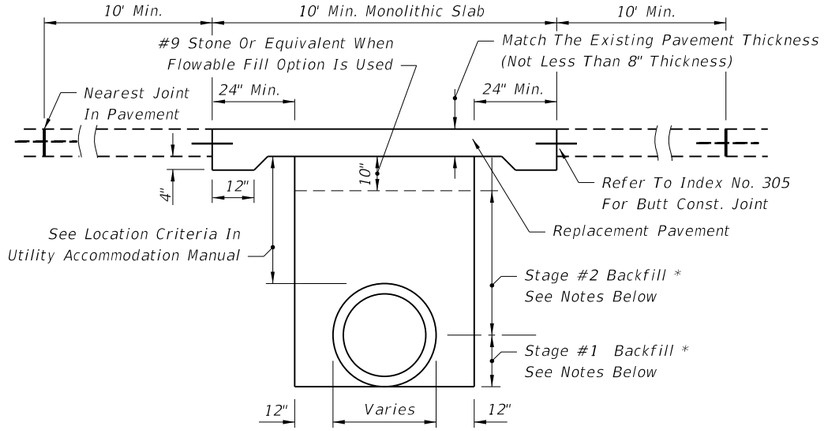

RIGID PAVEMENT NOTES

PAVEMENT REMOVAL AND REPLACEMENT

High early strength cement concrete (3000 psi) meeting the requirements of Standard Specification 346 shall be used for rigid pavement replacement.

Pavement shall be mechanically sawed and restored to conform with existing pavement joints within 12 hours. (See Index No. 305)

GRANULAR BACKFILL

Any edgedrain system that is removed shall be replaced with the same type materials. Any edgedrain system that is damaged shall be repaired with methods approved by the Engineer.

Fill material shall be placed in accordance with the Standard Specifications. Fill material shall be special select soil in accordance with Index No. 505.

In Stage #1, construct compacted fill beneath the haunches of the pipe, using mechanical tamps suitable for this purpose. This compaction applies to the material placed beneath the haunches of the pipe and above any bedding.

In Stage #2, construct fill along the sides of the pipe and up to the bottom of replacement pavement.

* FLOWABLE FILL OPTION

If mechanical compaction can not be achieved through normal mechanical methods then flowable fill may be used.

Flowable fill is to be placed in accordance with Section 121 of the Specifications, as approved by the Engineer.

Do not allow the utility being installed to float. If a method is provided to prevent flotation from occurring, Stages #1 and #2 can be combined, if approved by the Engineer.

In Stage #1, place flowable fill midway up on both sides of the utility. Allow to harden before placing Stage #2.

In Stage #2, place flowable fill to the bottom of the stone layer.

RIGID PAVEMENT CUT

GENERAL NOTES

1. The details provided in this standard index apply to cases in which jack and bore or directional boring methods are not required by the Engineer.
2. Flowable fill shall not be placed directly over loose, or high plastic, or muck material (see Index 505) which will cause settlement due to fill weight. Where highly compressible material exists, the amount, shape and depth of flowable fill must be engineered to prevent pavement settlement.
3. These details do not apply to utility cuts longitudinal to the centerline of the roadway which may require the additional use of geotextiles, special bedding and backfill, or other special requirements.
4. Method of construction must be approved by the Engineer.
5. Some pipe may require special granular backfill up to 6" above top of pipe. Geotextiles may be required to encapsulate the special granular material.
6. Where asphalt concrete overlays exist over full slab concrete pavement, the replacement pavement shall have an overlay constructed over the replacement slab. The overlay shall match the existing asphalt pavement thickness. The replacement friction course shall match the existing friction course, except structural course may be used in lieu of dense graded friction course.
7. All shoulder pavement, curb, curb and gutter, and their substructure disturbed by utility trench cut construction shall be restored in kind.
8. The use of flowable fill to reduce the time traffic is taken off a facility is acceptable but must have prior approval by the Engineer. Flowable fill use is allowed only when properly engineered for pavement crossings, whether straight or diagonal, and shall not be installed for significant depths or lengths. The maximum length shall be fifty (50) feet and a maximum depth of six (6) feet unless supported by an engineering document prepared by a registered professional engineer that specializes in soils engineering. The engineering document shall address the evaluation of local groundwater flow interruption and settlement potential.
9. Excavatable flowable fill is to be used when the flowable fill option is selected.

TRENCH CUTS AND RESTORATIONS ACROSS ROADWAYS

LAST REVISION	REVISION	DESCRIPTION:		FDOT DESIGN STANDARDS 2013	MISCELLANEOUS UTILITY DETAILS	INDEX NO.	SHEET NO.
07/01/12						307	1

6/28/2012 1:57:21 PM rd960rh C:\d\projects\standards\roadway\00300-s\00307-01.dgn

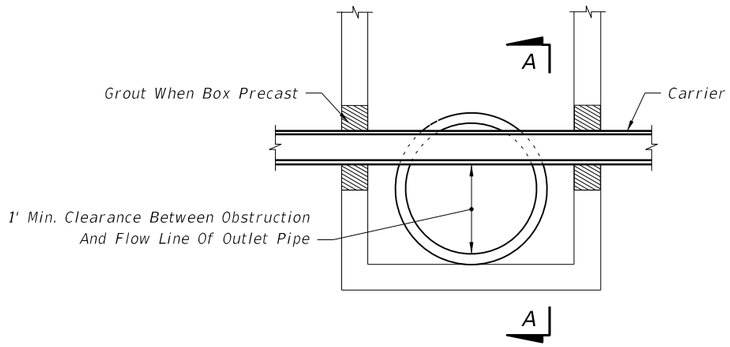

SECTION LONGITUDINAL TO CARRIER PIPE
(Nonpressure Or Nonfluid Carrier Installations)
No Joints Allowed Within Structure

UTILITY CONFLICT CONDITION I

NOTES FOR UTILITY CONFLICT PIPE

1. These details are for construction field expediency to resolve utility conflicts that cannot be remedied by relocation. For conflicts determined during design, use the construction shop drawings for structure details.

2. Concrete used in conflict structures shall be as specified in ASTM C478. 4000 psi may be used in lieu of Class I concrete.

3. Maximum opening for pipe shall be the pipe OD plus 6". Mortar used to seal the pipe into the opening will be of such mix that shrinkage will not cause leakage into or out of the structure.

4. If the conflict structure is round or there are multiple inlet or outlet pipes, then the wall section should be reviewed for strength.

5. If during construction or the plans design process it is determined that a potable water supply line must pass though a storm drain structure, it must be in compliance with Chapter 62–555.314 (3) F.A.C. and shown on the design or construction plans and submitted to the Florida Department of Environmental Protection (FDEP) Administrator For Drinking Water in the respective FDEP District for review and comment. This index and rule citation provide accepted methods for addressing conflicts when and where they cannot be reasonably avoided. To be submitted along with the plans shall be a justification describing inordinate cost and the impracticality of avoidance. If identified, properly justified, and accomplished in accordance with this index, approval is granted. Upon request, the Utility Agency Owner (UAO) must provide support data on the cost of relocation or adjustment to the FDOT for submittal to the FDEP. See the following web site for District FDEP Drinking Water Contacts: www.dep.state.fl.us/water/drinkingwater/index.htm and click on "Organization" on the menu to the right.

Carrier Casing: The Casing Shall Be Rated To The Greatest Pressure Of Either The Carrier That's Called For By Design Or That's Required By Construction. The Casing May Be Steel, Cast Iron, Ductile Iron Or Plastic. The Casing Can Be Seamless Or Sealed Half Sleeves.

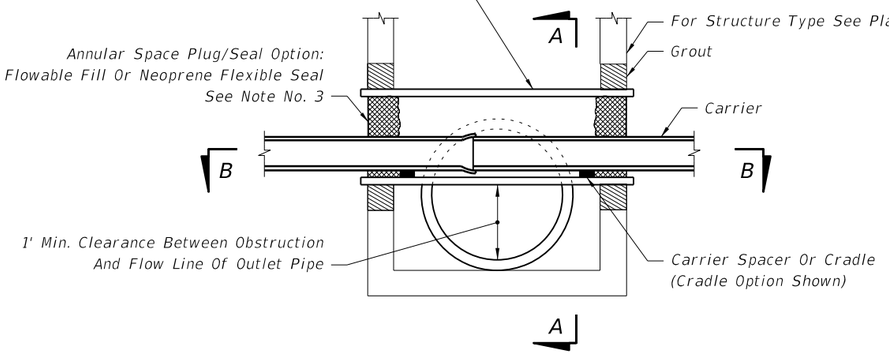

SECTION LONGITUDINAL TO CARRIER PIPE
(Pressure Or Fluid Carrier Installations)
UTILITY CONFLICT CONDITION II

SECTION BB

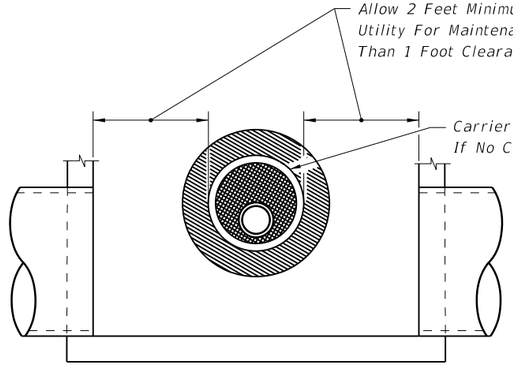

DESIGNER'S NOTE

"Sumped" Conflict Manholes Shall Not Be Used Unless The System Is Hydraulically Designed To Account For The Headloss Generated If The Sump Is Completely Blocked

SECTION AA

UTILITY CONFLICT PIPES THRU STORM DRAIN STRUCTURES

C:\d\projects\standards\roadway\00300-s\00307-02.dgn
6/28/2012 1:57:23 PM rd960rh

LAST REVISION	REVISION	DESCRIPTION:			INDEX NO.	SHEET NO.
07/01/09			FDOT DESIGN STANDARDS 2013	MISCELLANEOUS UTILITY DETAILS	307	2

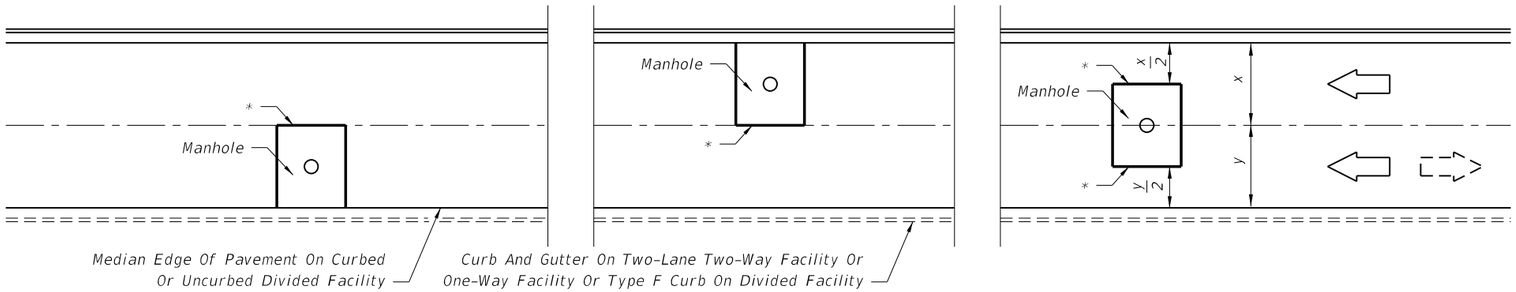

* Longitudinal Cut Lines For Both Curbed And Uncurbed Facilities Must Coincide With A Regular Seam Or Midlane Point In Order To Be Outside The Wheel Path

PLAN VIEW

FOR TWO OR MORE LANES (TWO LANES SHOWN)

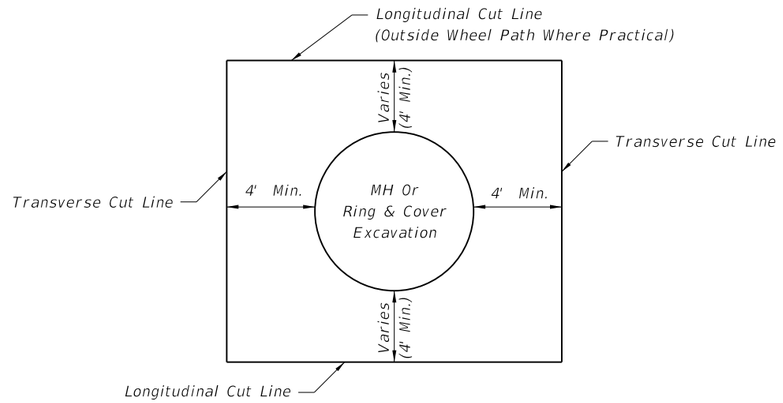

PARTIAL CUTS FOR RING AND COVER ADJUSTMENTS

NOTES

1. No irregular seams are permitted. All seams must be clean sawed.
2. Pavement cut seams for underground utility structures in rigid pavement are the same longitudinally, but the transverse seams shall extend to the nearest existing joint.
3. See Sheet 1 for replacement pavement.

NONTRENCH PAVEMENT CUTS FOR UNDERGROUND UTILITY STRUCTURES IN PAVEMENT

C:\d\projects\standards\roadway\00300-s\00307-03.dgn
rd960rh
1:57:25 PM
6/28/2012

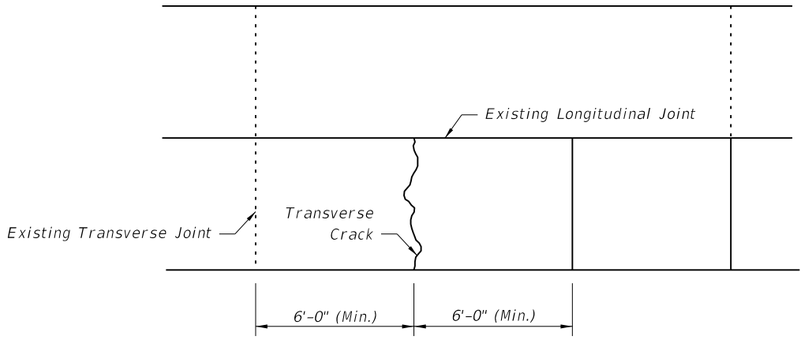

FIGURE 10.2 - REPAIR METHOD: NONE OR CLEAN AND SEAL

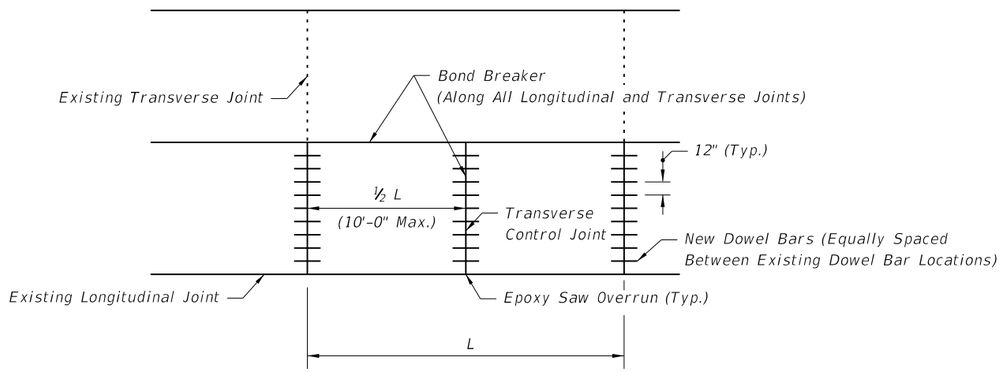

FIGURE 10.3 - FULL SLAB FULL DEPTH REPLACEMENT

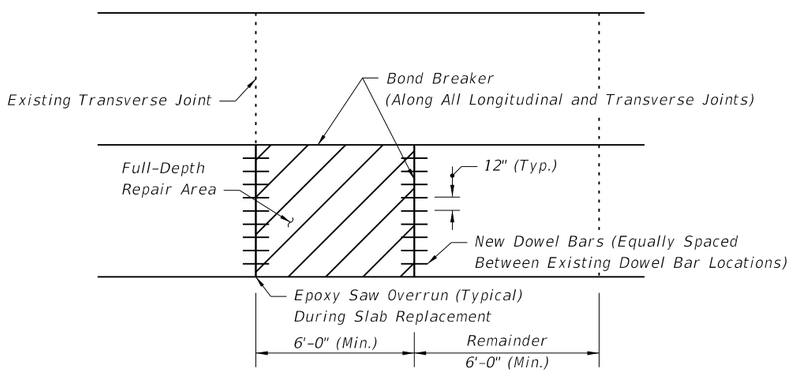

FIGURE 10.4 - PARTIAL SLAB FULL DEPTH REPLACEMENT

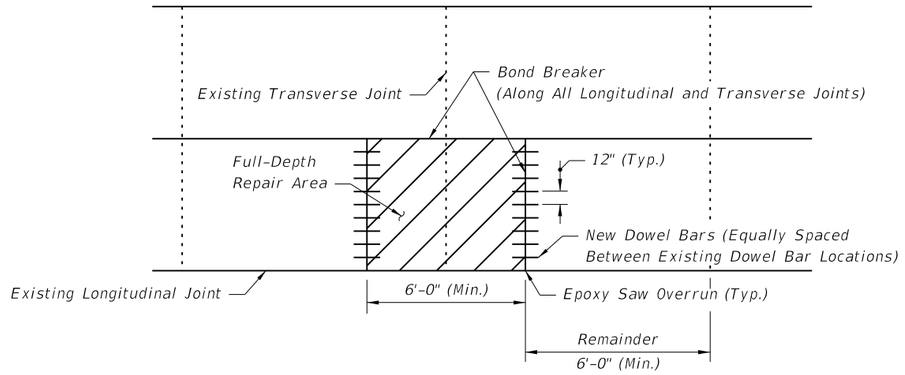

FIGURE 10.5 - FULL-DEPTH REPAIR ON BOTH SIDES OF THE JOINT

GENERAL NOTES

1. For Repair and Replacement Criteria see Sheet 2.
2. Full depth repairs consist of removing and replacing at least a portion of the existing slab to the bottom of the concrete.
3. Repair boundaries shall be sawed full-depth with diamond saw blades. On hot days, it may not be possible to make this cut without first making a wide, pressure relief cut within the repair boundaries. A carbide-tipped wheel saw may be used for this purpose, but the wheel saw must not intrude on the adjacent lane, unless the lane is slated for repair. The wheel saw cuts produce a ragged edge that promotes excessive spalling along joints. Hence, if wheel saw cuts are made, diamond saw cuts must be made 18 in. outside the wheel saw cuts. To prevent damage to the base, the wheel saw must not be allowed to penetrate more than 0.5 in. into the base.
4. No additional base or subgrade material shall be added and all loose base or subgrade material shall be removed prior to placement of the new concrete slab. The concrete slab shall be placed to the full depth of the material removed. No additional compensation will be allowed for additional concrete required to bring proposed concrete slab up to finished grade.
5. Removal of the damaged concrete pavement shall be by lifting. Any good concrete pavement which is damaged during removal of damaged areas shall be removed and replaced by the contractor at his expense.
6. If the roadway contract includes grinding, then the slab replacement shall be performed first.
7. During slab replacement operations, fill any saw cut over runs into adjacent slabs with epoxy.

6/28/2012 1:57:27 PM rd960rh C:\d\projects\standards\roadway\00300-s\00308-01.dgn

SLAB REPAIR AND REPLACEMENT CRITERIA

DISTRESS PATTERN	SEVERITY/DESCRIPTION		REPAIR METHOD	REFERENCE
CRACKING				
Longitudinal	Light	<⅛", no faulting, spalling <½" wide	None	Figure 10.2
	Moderate	⅛" <width <½", spalling <3" wide	Clean and Seal	Figure 10.2
	Severe	width >½", spalling >3" faulting >½"	Replace	Figure 10.3
Transverse	Light	<⅛", no faulting, spalling <½" wide	None	Figure 10.2
	Moderate	⅛" <width <½", spalling <3" wide	Clean and Seal	
	Severe	width >½", spalling >3" faulting >½"	Replace	Figure 10.3, 10.4 and 10.5
Corner Breaks	A corner of the slab is separated by a crack that intersects the adjacent longitudinal and transverse joint, describing an approximate 45° angle with the direction of traffic.		Full Depth	Figure 10.4 and 10.5
Intersecting Random Cracks (Shattered Slab)	Cracking patterns that divide the slab into three or more segments.		Full Depth	Figure 10.3 and 10.4
JOINT DEFICIENCIES				
Spall Nonwheel Path	Light	spall width <1½", < ⅓ slab depth, <12" in length	None	Figure 10.4 and 10.5
	Moderate	1½" <spall width <3", < ⅓ slab depth, <12" in length	None	Figure 10.4 and 10.5
	Severe	spall width >3" or length >12"	Full Depth	Figure 10.4 and 10.5
Spall Wheel Path	Light	spall width <1½", <than ⅓ slab depth, <12" in length	None	Figure 10.4 and 10.5
	Moderate	1½" <spall width <3", < ⅓ slab depth, <12" in length	Full Depth	Figure 10.4 and 10.5
	Severe	spall width >3" or length >12"	Full Depth	Figure 10.4 and 10.5
SURFACE DETERIORATION				
Pop Outs Nonwheel Path	Small pieces of surface pavement broken loose, normally ranging from 1 to 4 in. diameter and ½ to 2 in. in depth.			
	Light	Not deemed to be a traffic hazard	Keep under observation	
	Severe	Flying debris deemed a traffic hazard	Full Depth	Figure 10.4
Pop Outs Wheel Path	Small pieces of surface pavement broken loose, normally >3" diameter and 2" in depth.			
	Light	Deemed to be a traffic hazard	Full Depth	Figure 10.4
	Severe	Flying debris deemed a traffic hazard	Full Depth	Figure 10.4
MISCELLANEOUS DISTRESS				
Faulting	Elevation differences across joints or cracks.			
	Light	Faulting <4/32"	None	
	Moderate	4 <Faulting <16/32"	Grind	
	Severe	Faulting >16/32"	Grind	
Lane To Shoulder Drop-Off	Light	0 <drop-off <1"	None	N/A
	Moderate	1" <drop-off <3"	Build Up	
	Severe	drop-off >3 "	Build Up	
Water Bleeding Or Pumping	Seeping or ejection of water through joints or cracks.		Install appropriate drainage, edge drain, permeable subbase, reseal joints, etc.	N/A
Blowups	Upward movement at transverse joints or cracks often accompanied by shattering of the concrete.		Full Depth	Figure 10.3 and 10.4

C:\d\projects\standards\roadway\00300-s\00308-02.dgn
rd960rh
1:57:29 PM
6/28/2012

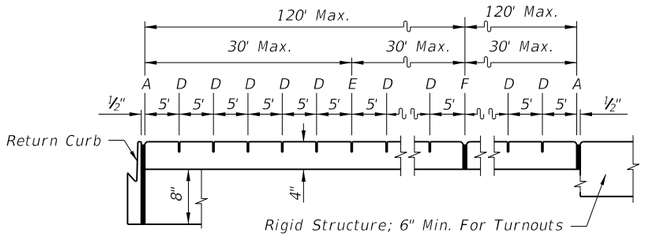

NOTE: "E" Joint(s) Required When Length Exceeds 30'

SAWED JOINTS

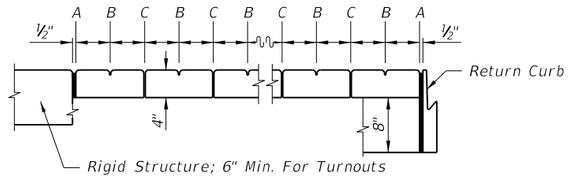

OPEN JOINTS

EXAGGERATED SCALE

LONGITUDINAL SECTION

SIDEWALK JOINTS

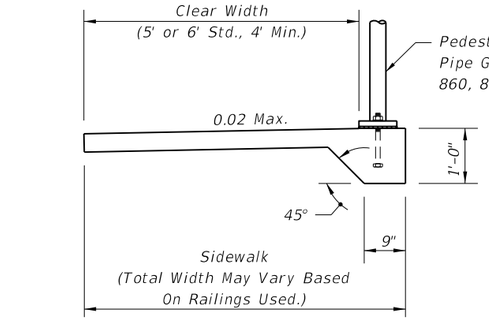

(Cost Of Edge Beam To Be Included In Price Of Sidewalk)

SIDEWALK WITH EDGE BEAM FOR SURFACE MOUNTED RAILINGS

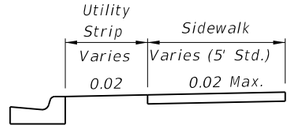

SECTION AA

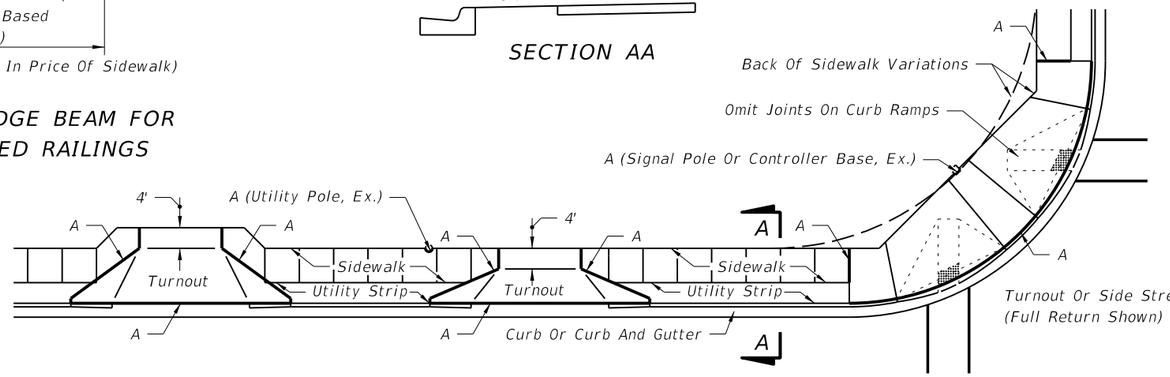

SIDEWALK WITH UTILITY STRIP

SECTION BB

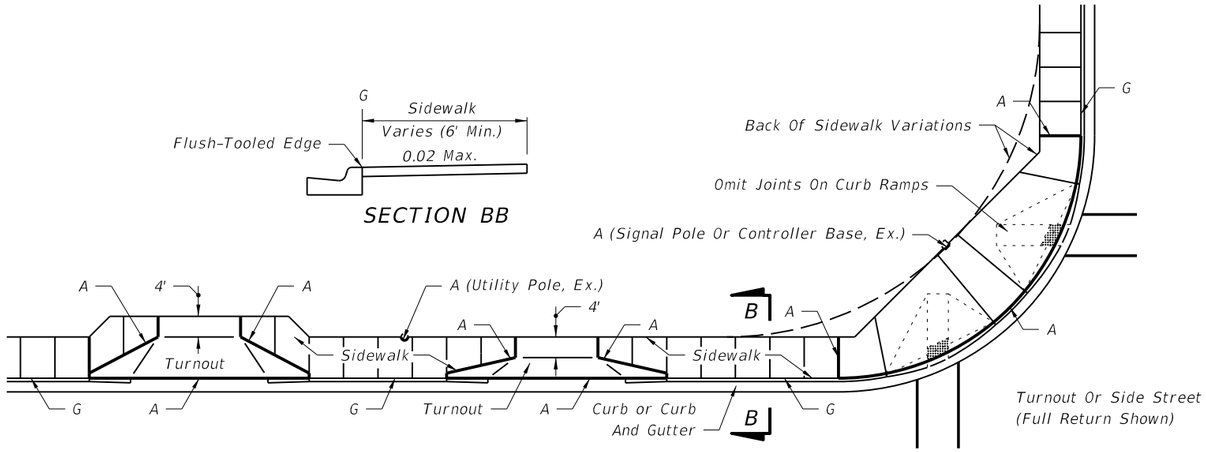

SIDEWALK WITHOUT UTILITY STRIP

JOINT LEGEND

A- ½" Expansion Joints (Preformed Joint Filler)

B- ⅛" Dummy Joints, Tooled

C- ⅛" Formed Open Joints

D- 3/16" Saw Cut Joints, 1½" Deep (within 96 hours) Max. 5' Centers

E- 3/16" Saw Cut Joints, 1½" Deep (within 12 hours) Max. 30' Centers

F- ½" Expansion Joint When Run Of Sidewalk Exceeds 120'.
Intermediate locations when called for in the plans or at locations as directed by the Engineer.

G- Cold Joint With Bond Breaker, Tooled

NOTES FOR CONCRETE SIDEWALK ON CURBED ROADWAYS

1. Sidewalks shall be constructed in accordance with Section 522 of the FDOT Standard Specifications. Public sidewalk curb ramps shall include detectable warnings and be constructed in accordance with Index No. 304. Detectable warnings are not required where sidewalks intersect urban flared turnouts.

2. Bond breaker material can be any impermeable coated or sheet membrane or preformed material having a thickness of not less than 6 mils nor more than ½".

3. For turnouts see Index No. 515.

4. Construct sidewalks with 1' thick Edge Beam through the limits of any surface mounted Pedestrian/Bicycle Picket Railing or Pipe Guiderail shown in the plans.

5. Sidewalk shall be paid for under the contract unit price for Sidewalk Concrete (___Thick), S.Y.

CONCRETE SIDEWALK FOR CURBED ROADWAYS

LAST REVISION	REVISION	DESCRIPTION:		FDOT DESIGN STANDARDS 2013	CONCRETE SIDEWALK	INDEX NO.	SHEET NO.
01/01/10						310	1

C:\d\projects\standards\roadway\00300-s\00310-01.dgn
rd960rh
1:57:32 PM
6/28/2012

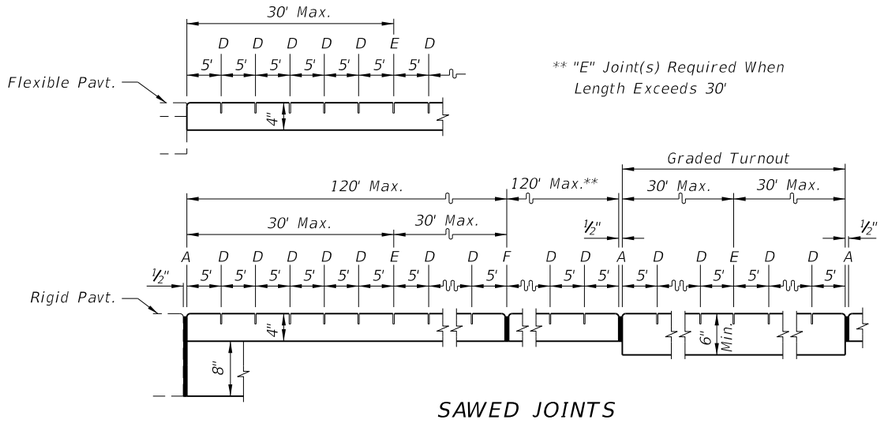

SAWED JOINTS

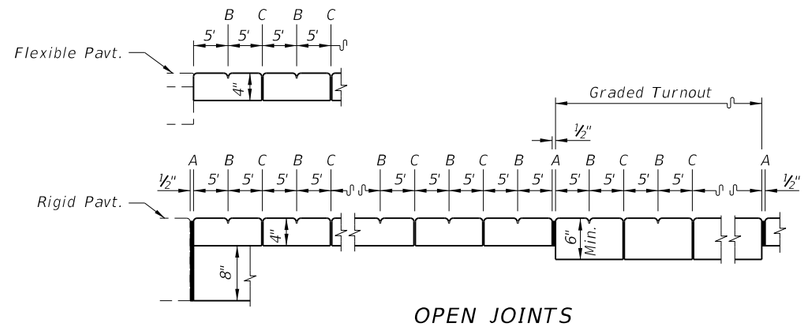

OPEN JOINTS
EXAGGERATED SCALE

LONGITUDINAL SECTIONS
SIDEWALK JOINTS

JOINT LEGEND

A- ½" Expansion Joints (Preformed Joint Filler)

B- ⅛" Dummy Joints, Tooled

C- 3/16" Formed Open Joints

D- 3/16" Saw Cut Joints, 1½" Deep (96 Hour) Max. 5' Centers

E- ½" Saw Cut Joints, 1½" Deep (12 Hour) Max. 30' Centers

F- ½" Expansion Joint When Run Of Sidewalk Exceeds 120'. Intermediate locations when called for in the plans or at locations as directed by the Engineer.

NOTES FOR CONCRETE SIDEWALKS ON UNCURBED ROADWAYS

1. Sidewalks shall be constructed in accordance with Section 522 of the FDOT Standard Specifications.

2. Provide detectable warnings that extend the full width of the sidewalk and 24" deep from the edge of pavement where sidewalks adjoin the following vehicular ways:

   -side roads and streets
   -driveways with signalized entrances
   -driveways with entrance volumes greater than 600vpd
   -driveways with entrance speeds of 25 mph or greater
   -right in-right out composite driveways

   Detectable warning surfaces shall conform to the requirements described in the General Notes of Index 304. To the extent practical, the rows of truncated domes in a detectable warning surface should be aligned to be perpendicular or radial to the street, roadway, or driveway, as applicable.

   For sidewalks continuous through driveways, detectable warning surfaces are not required.

3. For turnouts see Index No. 515.

4. Construct sidewalks with 1' thick Edge Beam through the limits of any surface mounted Pedestrian/Bicycle Picket Railing or Pipe Guiderail shown in the plans. See Sheet 1 for details.

5. Sidewalk shall be paid for under the contract unit price for Sidewalk Concrete (___Thick), SY.

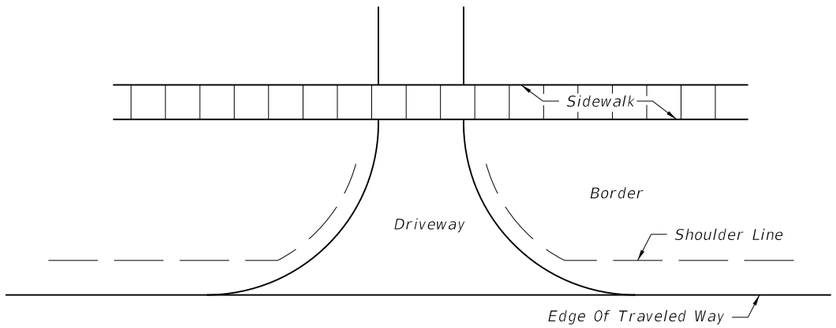

CONTINUOUS SIDEWALK

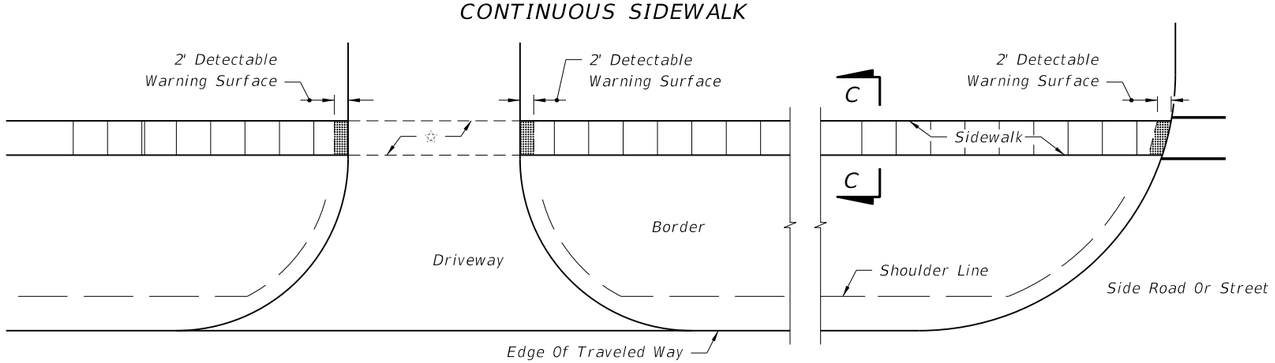

☆ When driveway is new construction, reconstruction, or altered, cross slope within this area shall not exceed 0.02. Existing driveways that are not being altered may be left as they are.

DISCONTINUOUS SIDEWALK

PLAN

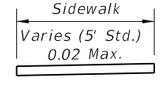

SECTION CC

CONCRETE SIDEWALK FOR UNCURBED ROADWAYS

LAST REVISION	REVISION	DESCRIPTION:		FDOT DESIGN STANDARDS 2013	CONCRETE SIDEWALK	INDEX NO.	SHEET NO.
07/01/09						310	2

C:\d\projects\standards\roadway\00300-s\00310-02.dgn rd960rh 1:57:34 PM 6/28/2012

GENERAL NOTES

1. The illustrations for guardrail applications are standard configurations; adjustments are to be made as required by site specific conditions to attain optimum design for function, economy and serviceability.

2. The beginning of guardrail need shall be at the greatest of the upstream distances from the hazard, as determined from Figures 1 and 2, and other application details of this Index.

3. One Panel (i.e., panel length) equals 12'–6". Guardrail shall be constructed with rail elements 12'–6" in length except where 25'–0" elements are called for by this and other standards (indexes) or specifically called for in the plans.

   Post spacing shall be 6'–3" except that reduced spacing shall be used for (a) transitions to anchorages at rigid structures such as bridges (See Detail J and Index No. 402) and transitions to redirective crash cushions, (b) the conditions in Note No. 7 below, (c) special post applications, (d) reduced post spacing required for specific end anchorage assemblies, and, (e) specific spacing called for in the plans.

4. Guardrail mounting height for the W–beam without rub rail and for thrie–beam is 1'–9" to the center of beam, and for W–beam with rub rail 2'–0" to center of beam. Modified thrie–beam shall be mounted at a height of 2'–0" to center of beam. The height is critical and shall be attained in all cases; a tolerance of 3" above and 1" below the standard mounting heights is permissible over necessary surface irregularities (e.g., across shoulder gutters, inlets and roadway surface break lines). For guardrail placed on slopes beyond the shoulder point, there shall be no deviation more than 1" below to 3" above the desired height within any 25 foot section of guardrail.

5. All guardrail panels, end sections and special end shoes shall be lapped in the direction of adjacent traffic.

6. Flared end anchorage assemblies providing 4' offset are the standard end treatments for single face free standing guardrail approach ends. Parallel end anchorage assemblies for guardrail approach end treatments will be constructed only when restraints prevent construction of flared end anchorages.

   Guardrail end anchorage assemblies shall be of the type called for in the plans. If the plans call for end anchorage assembly "flared" and does not identify the specific system(s) to be used, the contractor has the option to construct any FDOT approved flared assembly provided in this Index or identified on the Qualified Products List (QPL), subject to the conditions identified in the approved Index drawings, or QPL drawings if applicable.

   If the plans call for end anchorage assembly "parallel" and does not identify the specific system(s) to be used, the contractor has the option to construct any FDOT approved parallel assembly provided in this Index or identified on the QPL, subject to the conditions identified in the approved Index drawings, or QPL drawings if applicable.

   If the plans call for a specific end anchorage assembly, substitutions with other end anchorage assemblies will not be permitted unless approved by the Engineer. Approved substitutions will not be eligible for CSIP consideration.

   When an end treatment is attached to guardrail with Pedestrian Safety Treatment, only end treatment systems with timber posts are to be used.

   Existing approved proprietary end anchorage systems are identified on the Qualified Products List (QPL). After January 1, 2011 – manufacturers seeking approval of new proprietary end anchorage systems for inclusion on the QPL must submit application along with design documentation showing the end anchorage system; is crash tested to Test Level 3 criteria in accordance with the Manual for Assessing Safety Hardware (MASH), is accepted by FHWA for use as a guardrail end anchorage system, and is compatible with FDOT guardrail systems. System approvals will be contingent on FDOT's evaluation of crash test performance results for consistency with FDOT guardrail application and use. If approved, installation drawings signed and sealed by a professional engineer licensed in the State of Florida will be required.

7. At above ground rigid hazards where the face of guardrail is offset from the hazard less than the 4' minimum for standard W–beam, other guardrail configurations with reduced post spacing may be applicable; see General Note No. 11 and the minimum offset table on Sheet 19. For guardrail with post spacing less than 6'–3" the reduced spacing should extend a minimum of one panel in advance of the hazard. When minimum offset cannot be attained safety shape concrete barrier wall shall be used unless other shielding is approved by the Engineer of Record. See Index No. 410 for safety shape concrete barrier walls and typical applications, and the plans for special barrier shapes and applications.

8. In addition to use at roadside hazards or other areas where the Engineer has deemed guardrail necessary, guardrail should be considered on flush shoulder sections where fill slopes are steeper than 1:3 within the clear zone and fill heights are 6' or greater. Curbed sections where fill slopes are steeper than 1:3 and fill heights are 6' or greater within 22' of the traveled way should be evaluated for installation of guardrail. Additional guidance for evaluating the need for guardrail can be found in the Plans Preparation Manual.

9. The guardrail to bridge connections contained in this Index are for bridges with Test Level 4 traffic railing barriers. For guardrail to concrete barrier wall connections see Index No. 410. For existing bridges receiving retrofit traffic railing barriers see Index No. 402.

10. The W–beam guardrail system in this index is the standard system to be used on the State Highway System where a Test Level 3 semi–rigid barrier is required.

11. Thrie–beam guardrail panels shall be used in guardrail transitions to bridge traffic railing barriers, to concrete and certain water filled safety shaped barriers, certain crash cushions and as a continuous barrier when called for in the plans. For additional information on rail attachment, post spacings, nested rails, location of thrie–beam transition panels and offset block configurations see details elsewhere in this Index, and Index Nos. 402, 410 and 414. The use of thrie–beam guardrail with standard offset blocks (Test Level 3 semi–rigid system) may be considered where one or more of the conditions listed below or similar conditions are anticipated or exist:

    a. W–beam deflection is marginal,
    b. W–beam with rub rail considered functionally deficient,
    c. Vehicle overriding W–beam is probable,
    d. Drainage will be impeded or blocked by the use of concrete barrier wall (subject to deflection space requirements),
    e. High frequency of repairs to W–beam,
    f. Spandrel beam with low deflection needed around unrelocatable structure,
    g. Accommodating passenger vehicles heavier or larger than the standard passenger car (e.g., passenger vans and small buses).

    The modified thrie–beam guardrail is a Test Level 4 semi–rigid system and may be used where a Test Level 4 guardrail is required.

12. Single face median guardrail for bridges located on divided roadways shall be constructed the same as outer roadway guardrail under the following conditions:

    a. Wide medians where approach end anchor is located outside of opposing roadway clear zone,
    b. Medians of uniform width that are occupied by other transportation and joint use facilities,
    c. Medians of uniform or variable widths with independent vertical alignments not suited to normal median guardrail installations,
    d. Medians of bifurcated roadways.

13. Straight rail sections may be used to construct radii of 125' or greater. For radii less than 125' the rail must be fabricated (shop–bent) to fit.

14. Crash cushions may be required in lieu of or in conjunction with guardrail at locations where space does not permit development of sufficient guardrail length, offset or crashworthiness at terminals. Crash cushions shall be constructed at or in lieu of Type II assemblies located in the approach clear zones.

15. Corrugated sheet steel beams, end shoes, end sections and backup plates shall conform to the current requirements of AASHTO M180, Class A, Type II (zinc) coating. All other metallic components, hardware and accessories shall be in conformance with the appropriate current AASHTO requirements.

16. Offset blocks:
    a. Steel offset blocks other than modified thrie–beam offset blocks are not permitted for new guardrail construction. Existing steel offset blocks may remain throughout the service life of the existing guardrail. PERMISSIBLE POST AND OFFSET BLOCK COMBINATIONS are tabulated on Sheet 16.
    b. Plastic offset block installations shall be constructed on guardrail outside of approach end anchorage assemblies or any transition system connecting to a rigid or thrie–beam barrier.

17. Where necessary to enlarge or add holes to galvanized guardrail, the work will be done by drilling or reaming. Damaged galvanized guardrail will be metalized in accordance with Sections 562 and 971 of the Standard Specifications. No burning of holes will be permitted.

18. For guardrail reflector details see Sheet 17.

19. Any run of guardrail with existing concrete posts that is being reset under a construction or maintenance contract shall be reset using timber or steel posts. Repair within a run of guardrail with existing concrete posts can be made with either steel, timber, sound salvaged concrete posts; replacement in kind of damaged posts is to be made when like posts are on hand at time of repair.

20. Substitutions between thrie–beam guardrail and concrete barrier wall are not eligible for CSIP consideration.

21. On roadways designated for reverse laning, all downstream ends of guardrail that are not shielded or that are not designed as approach end terminals shall be marked with post–mounted Type 3 Object Markers. Trailing bridge ends and trailing shoulder concrete barrier wall ends shall be marked with Type 3 Object Markers except where there is trailing end guardrail. Object markers to be installed facing reverse laning traffic. The cost of the object marker shall be included in the cost of the guardrail.

C:\d\projects\standards\roadway\00400-s\00400.dgn
rd960rh
1:57:36 PM
6/28/2012

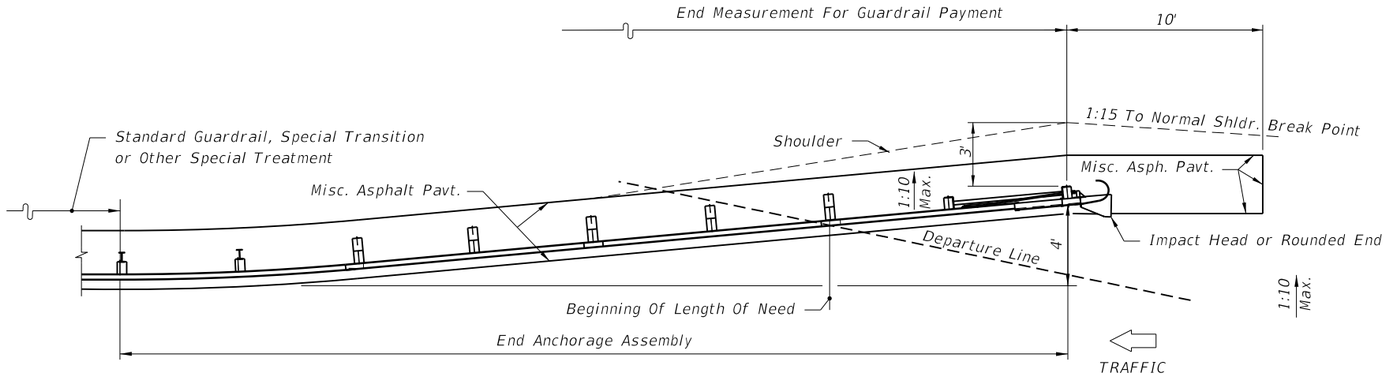

FLARED OPTION

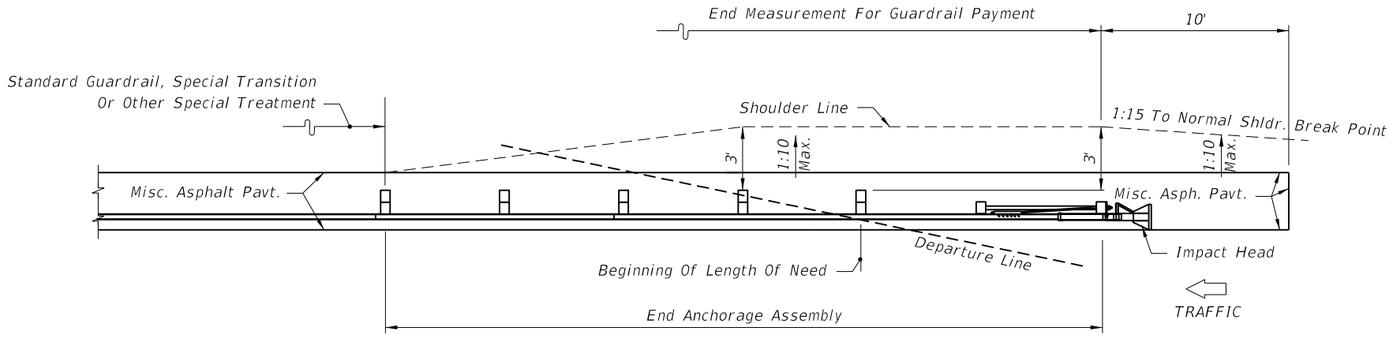

PARALLEL OPTION

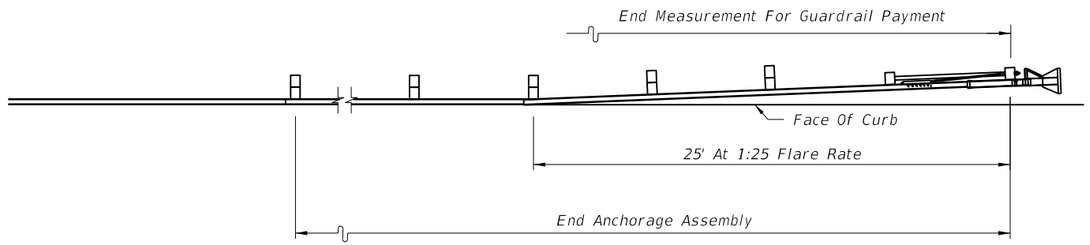

PLACEMENT OF PARALLEL OPTION AT CURBED LOCATIONS

GENERAL NOTES

1. These drawings are representative of the various proprietary guardrail end anchorage assemblies listed on the Department's Qualified Products List (QPL). For specific details and requirements see the vendor drawings on the QPL at

   www.dot.state.fl.us/specificationsoffice/

2. These drawings present the general graphics to show the limits of payment for guardrail and end anchorage assemblies, modifications to the shoulder and placement of the miscellaneous asphalt mow strips.

3. These drawings, along with the various vendor drawings on the QPL, are intended to show sufficient details for installation of the end anchorage assemblies and their connection to shoulder guardrail. This precludes the requirement for shop drawing submittals unless otherwise called for in the plans. The various end anchorage assemblies shall be assembled in accordance with the manufacturer's detailed drawings, procedures and specifications.

4. The various proprietary end treatments listed on the QPL are intended for use as approach end guardrail anchorages for shoulder guardrail. The effective length of the end treatments vary–refer to the vendor drawings on the QPL for the length and the use of special panels and details. Standard guardrail, guardrail transitions or other special treatments shall not be included within the limits of the end anchorage assembly. See the vendor drawings for the alignment of the end treatment with respect to the normal guardrail alignment.

5. Flared or parallel end anchorage assemblies shall not be used in medians where horizontal clearance requires use of a back rail.

6. Each of the various end anchorage assemblies have unique features. Careful attention should be given to the types and orientation of the posts and other components. Refer to the vendor drawings on the QPL for the specific requirements of each system.

7. For galvanizing requirements of the metallic components see Standard Specifications Section 967.

8. Test Level 3 crash tested end anchorage assemblies shown on the QPL are suitable for all design speeds.

9. Flared end anchorage assemblies shall be paid for under the contract unit price for Guardrail, End Anchorage Assembly (Flared), EA.

   Parallel end anchorage assemblies shall be paid for under the contract unit price for Guardrail, End Anchorage Assembly (Parallel), EA.

   The unit price for end anchorage assemblies shall be full compensation for furnishing and installing all components in accordance with the plans, the manufacturer's detail drawings, procedures and specifications and these drawings.

APPROACH END ANCHORAGE DETAILS

6/28/2012 1:57:37 PM rd960rh C:\d\projects\standards\roadway\00400-s\00400.dgn

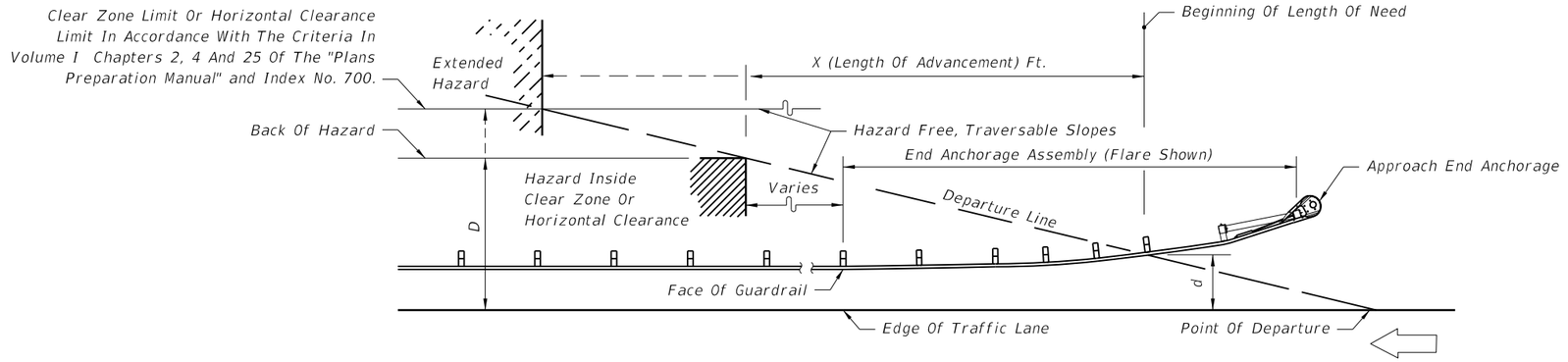

Design Speed mph	X (Length Of Advancement) Ft. (See NOTES 1 & 2)
≤ 45	= 16 (D–d)
≥ 50	= 13 (D–d)

NOTES

1. Length of advancement determined from the diagram and equations above establishes the location of the upstream beginning length of need for guardrail, however, the length of advancement can be no less than that required by other details of this index.

2. The flared end anchorage with 4' nose offset is shown in the diagram above, however, the diagram applies to other configurations that may occur at the beginning of length of need, such as, other flare designs; upstream returns; and, other upstream deflected, tangent and curvilinear conditions.

Equation Variables:

D = Distance in feet from near edge of the near approach traffic lane to either (a) the back of hazard, when the hazard is located inside the clear zone or horizontal clearance or (b) the clear zone or horizontal clearance outer limit, when the hazard extends to or goes beyond the clear zone or horizontal clearance limit. For left side hazards on two–way undivided facilities, D is measured from the inside edge of the near approach traffic lane (see Figure 2).

d = Distance in feet from the near edge of the near approach traffic lane to the face of guardrail at its intersection with the departure line. For left side hazards on two–way undivided facilities, d is measured from the inside edge of the near approach traffic lane (see Figure 2).

For flared and parallel end anchorage assemblies the beginning length of need is to be set at the center of post #3. That is, the departure line must intersect the face of the rail at post #3.

For flared end anchorage assemblies the offset distance "d" will equal the normal guardrail offset measured from the face of the guardrail to the edge of the near approach travel lane plus 1'–2" for 45 mph or less and 1'–9¼" for greater than 45 mph.

LENGTH OF ADVANCEMENT - FIGURE 1

C:\d\projects\standards\roadway\00400-s\00400.dgn
6/28/2012 1:57:38 PM rd960rh

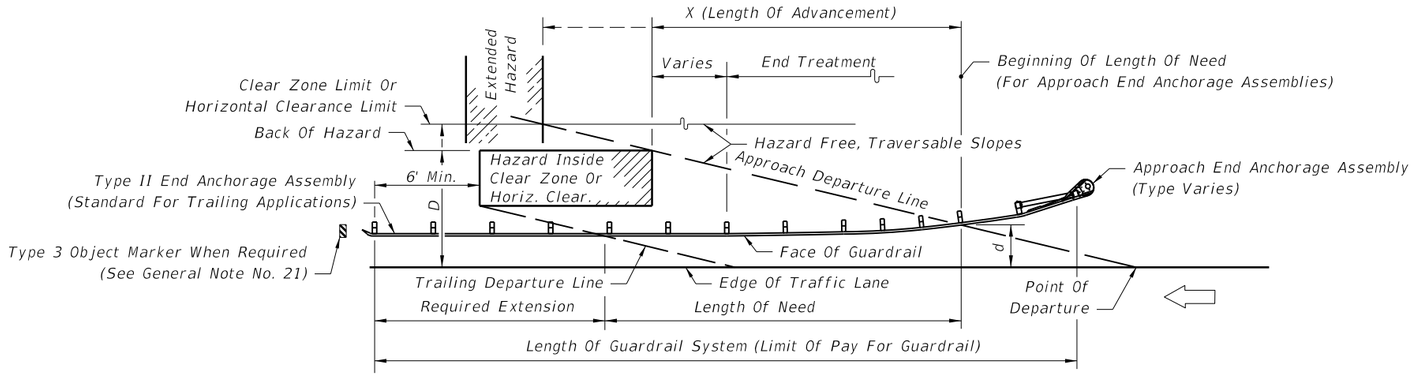

(LEFT SIDE OPPOSITE HAND)

ONE-WAY TRAFFIC

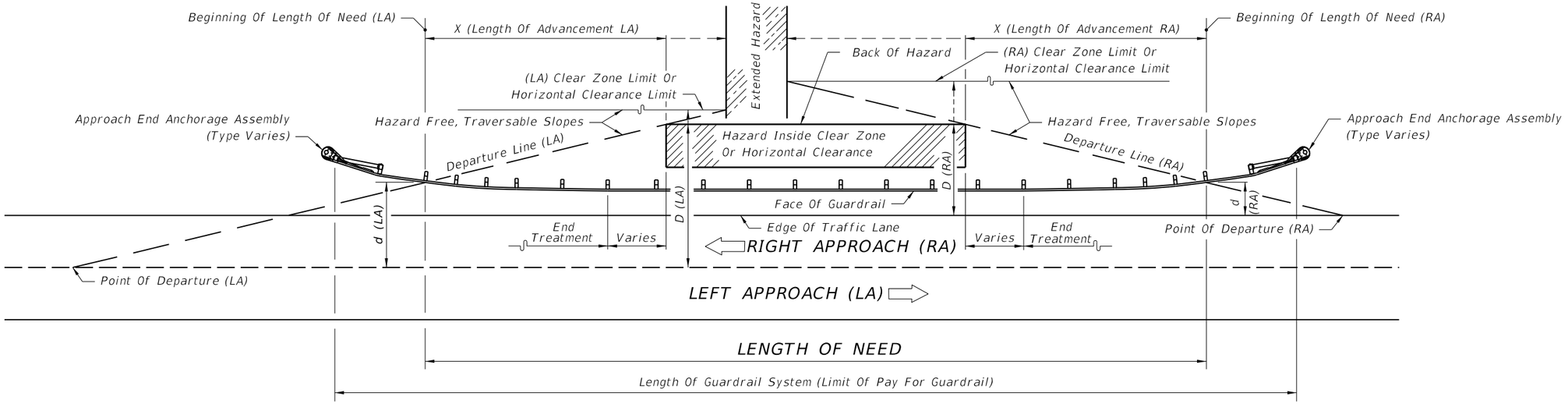

TWO-LANE TWO-WAY TRAFFIC

For description of the dimensions D, d and X, see Length of Advancement - Figure 1.
For additional shoulder guardrail information, see Details B and C.

LOCATING TERMINALS ON SHOULDER GUARDRAILS - FIGURE 2

LAST REVISION	REVISION	DESCRIPTION:				
07/01/05			FDOT DESIGN STANDARDS 2013	GUARDRAIL	INDEX NO. 400	SHEET NO. 4

C:\d\projects\standards\roadway\00400-s\00400.dgn
rd960rh
1:57:38 PM
6/28/2012

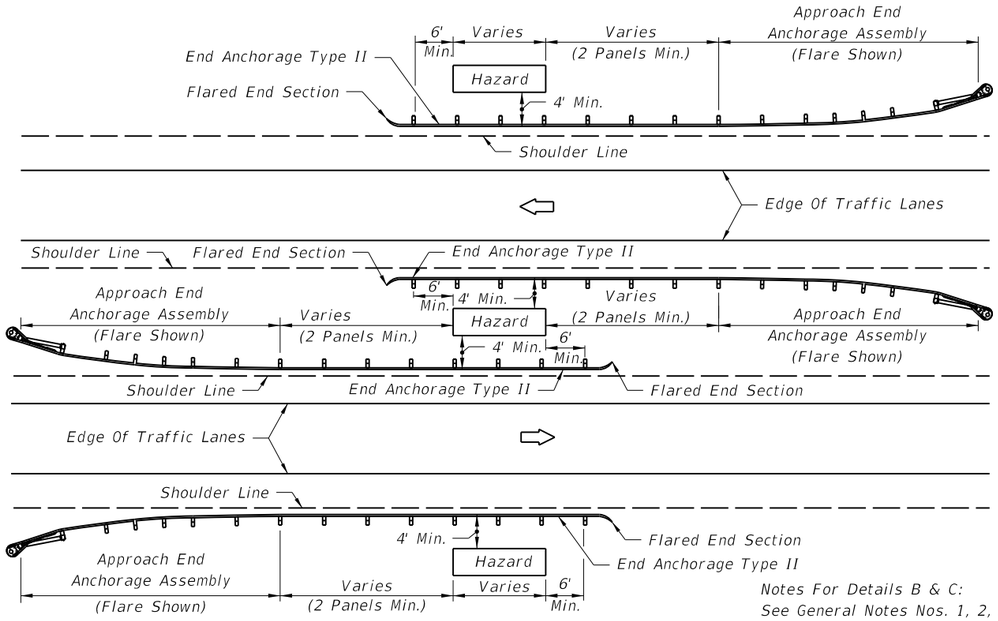

Median Guardrail Applications Shown Are For Locations Where Approach End Anchorage Assemblies Are Outside Of The Opposing Roadway Clear Zone.

DIVIDED ROADWAY- DETAIL B

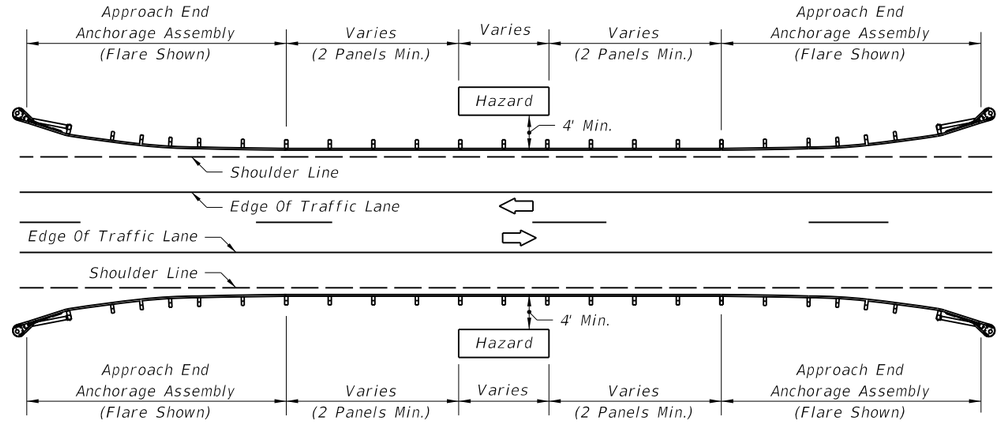

UNDIVIDED ROADWAY- DETAIL C

Notes For Details B & C:
See General Notes Nos. 1, 2, 3, 4, 5, 6, 7 and 8.
See Details K and L for guardrail offsets.
For end anchorage assemblies see sheets elsewhere in this Index and the plans.
For hazards that require shielding and are located back of curb see other sheets of this index, and where rigid barrier is required see Index No. 410.

GUARDRAIL APPLICATION FOR ROADSIDE HAZARDS

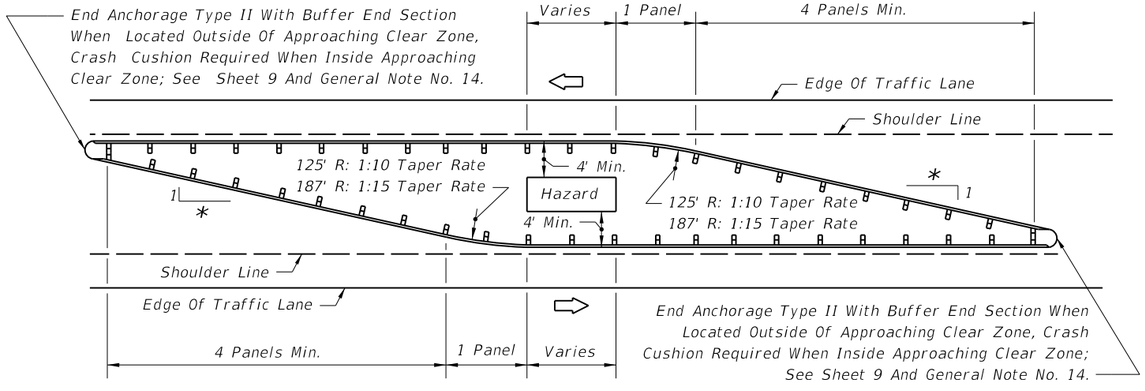

This Guardrail Configuration Applies Where Approach End Anchorage Assemblies Cannot be Located Outside Of The Opposing Roadway Clear Zone.

OPPOSING TRAFFIC- DETAIL D

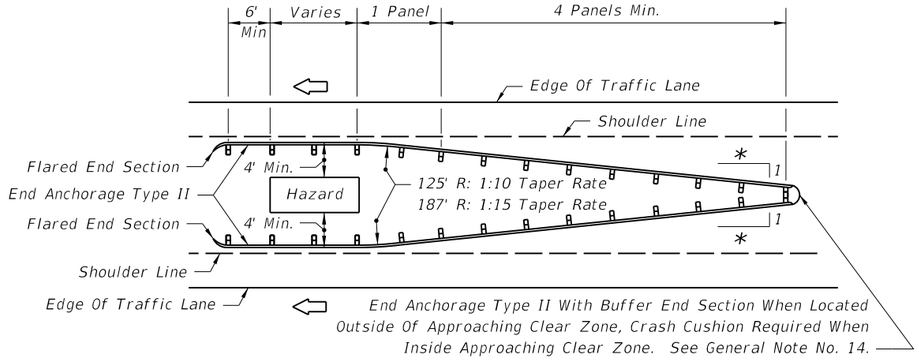

ONE-WAY TRAFFIC- DETAIL G

* 1:10 Taper Rate For Design Speeds ≤45 mph
1:15 Taper Rate For Design Speeds ≥50 mph

Notes For Details D & G:
See General Notes Nos. 1, 2, 3, 4, 5, 7, and 14.
See Details K and L for guardrail offsets.
For hazards that require shielding and are located back of curb see other sheets of this index, and where rigid barrier is required see Index No. 410.

GUARDRAIL APPLICATION FOR NARROW MEDIAN AND GORE HAZARDS

C:\d\projects\standards\roadway\00400-s\00400.dgn
rd960rh
1:57:39 PM
6/28/2012

LAST REVISION	REVISION	DESCRIPTION:		FDOT DESIGN STANDARDS 2013	GUARDRAIL	INDEX NO.	SHEET NO.
07/01/05						400	5

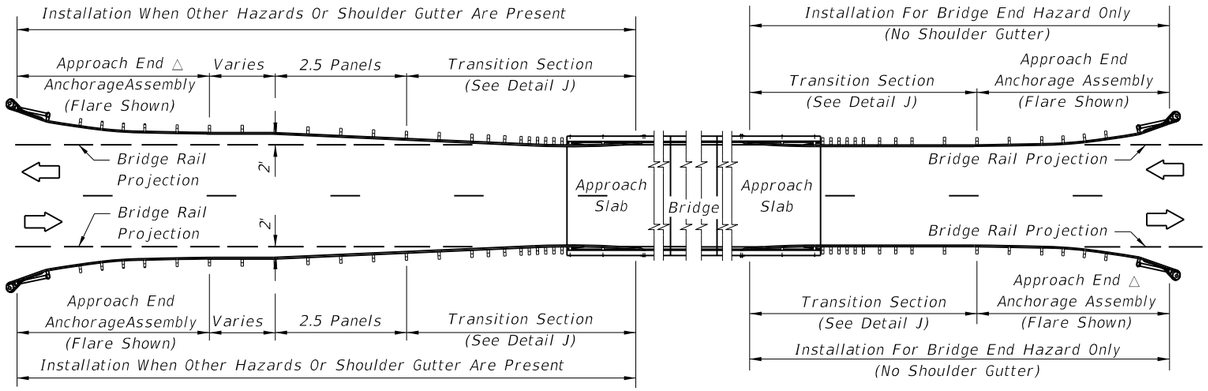

△ With Four Or More Lanes Trailing Guardrail Anchorages May Be As Shown In Detail P Unless Other Anchorage Called Out In The Plans

UNDIVIDED ROADWAY - DETAIL O

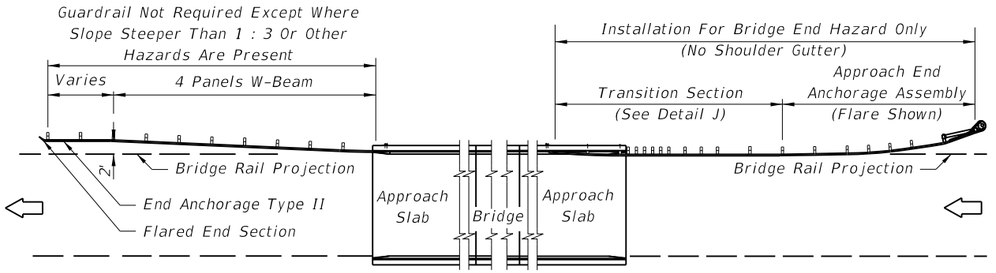

For Median Guardrail See Sheets 8 & 9 And General Note 12.

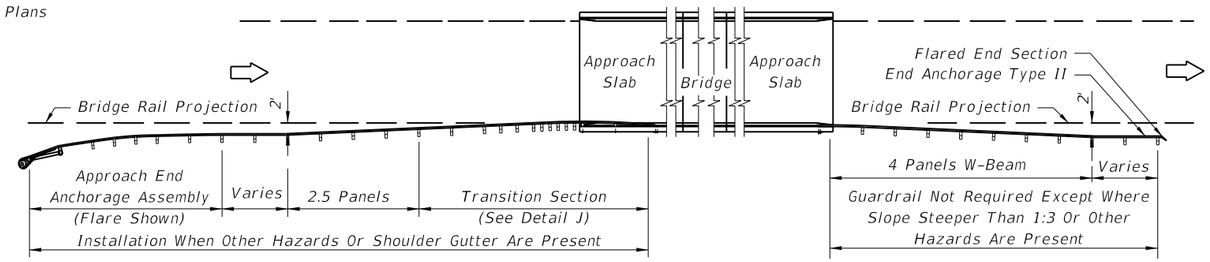

DIVIDED ROADWAY - DETAIL P

Notes For Details O & P:
See General Notes Nos. 1, 2, 3, 4, 5, 6, 8 and 9. See Detail J for approach connections to bridges.
For end anchorage assemblies see sheets elsewhere in this Index and the plans.
Shoulder gutter in itself does not require the installation of guardrail.

GUARDRAIL APPLICATIONS FOR BRIDGES WITH FULL WIDTH SHOULDERS AND SAFETY SHAPE TRAFFIC RAILING BARRIER EXTENDING FULL LENGTH OF APPROACH SLAB

6/28/2012 1:57:40 PM rd960rh C:\d\projects\standards\roadway\00400-s\00400.dgn

LAST REVISION	REVISION	DESCRIPTION:		FDOT DESIGN STANDARDS 2013	GUARDRAIL	INDEX NO.	SHEET NO.
02						400	6

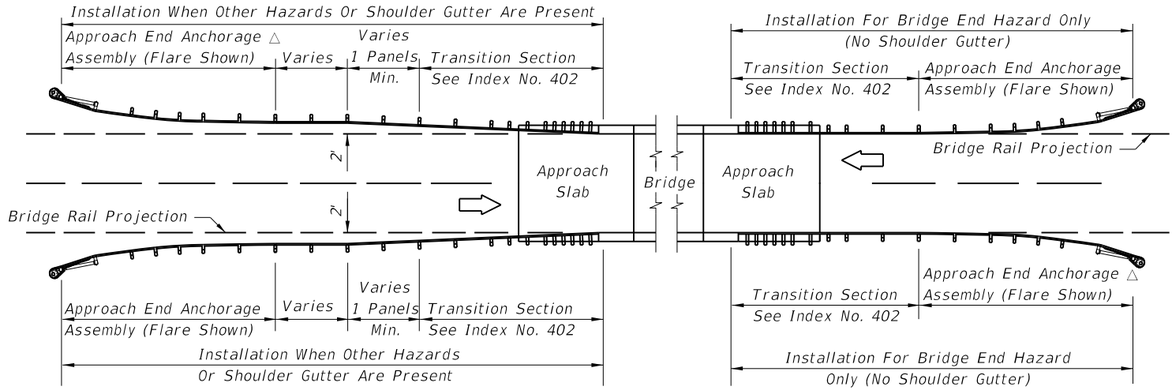

△ With Four Or More Lanes Trailing Guardrail Anchorages May Be As Shown In Detail I Unless Other Anchorage Called Out In The Plans

UNDIVIDED ROADWAY - DETAIL H

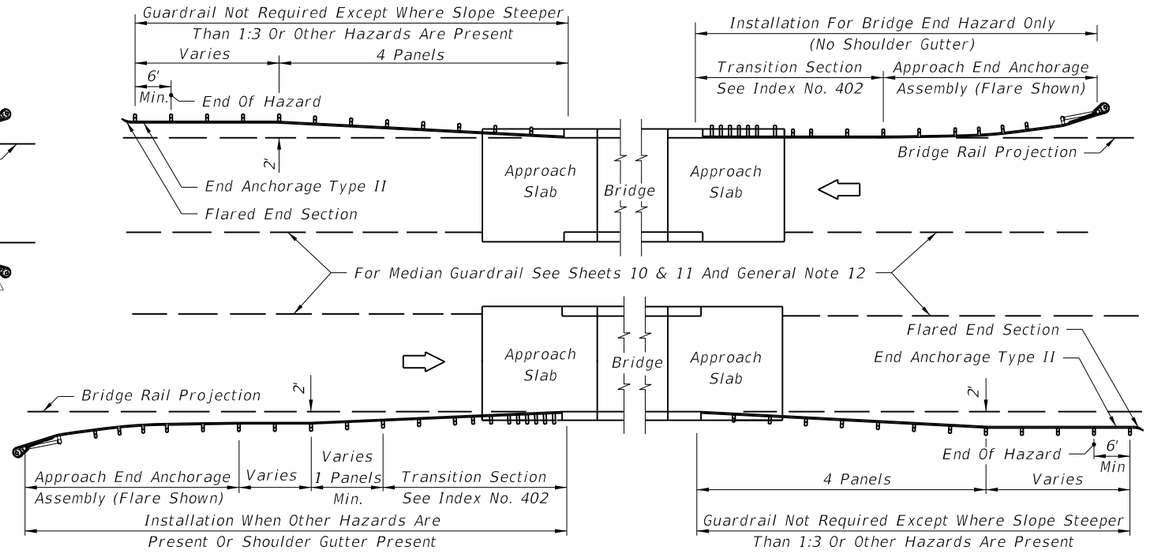

DIVIDED ROADWAY - DETAIL I

Notes For Details H & I:
See General Notes Nos. 1, 2, 3, 4, 5, 6, 8, and 9. See Index No. 402 for approach connections to bridges.
For end anchorage assemblies see sheets elsewhere in this Index and in the plans.
Shoulder gutter in itself does not require the installation of guardrail.

GUARDRAIL APPLICATIONS FOR BRIDGES WITH FULL WIDTH SHOULDERS AND SAFETY SHAPE TRAFFIC RAILING BARRIER EXTENDING LESS THAN FULL APPROACH SLAB LENGTH

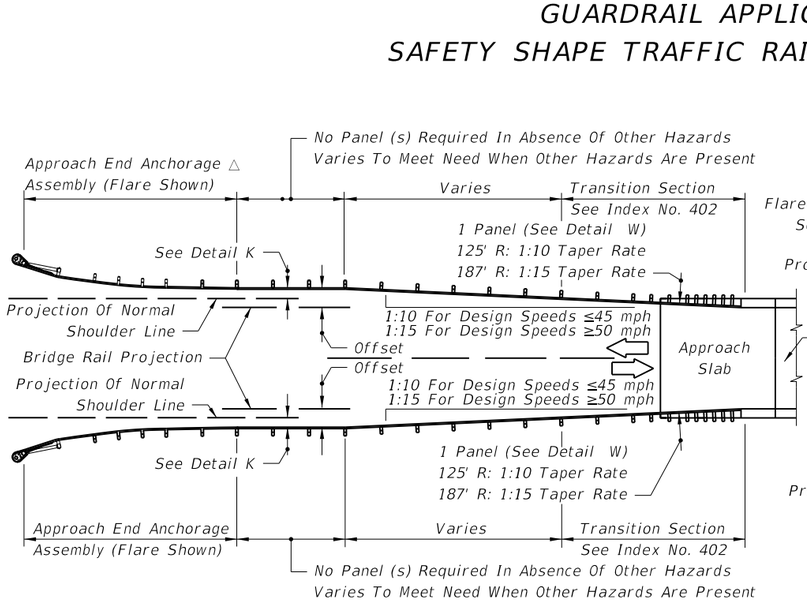

△ With Four Or More Lanes Trailing Guardrail Anchorages May Be As Shown In Detail I Unless Other Anchorage Called Out In The Plans

UNDIVIDED ROADWAY - DETAIL S

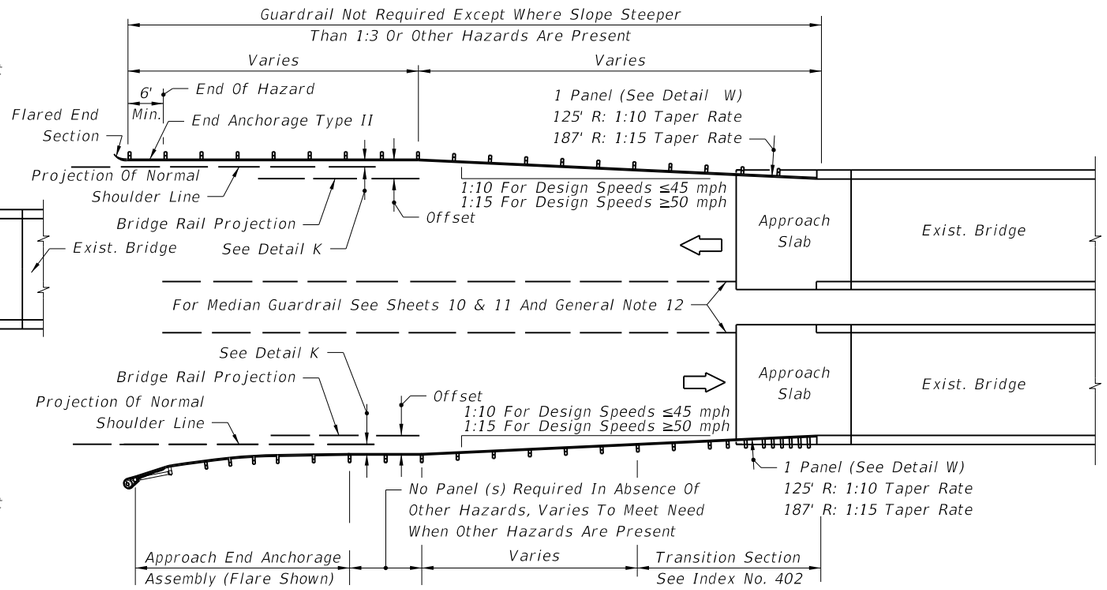

DIVIDED ROADWAY - DETAIL T

Notes for Details S & T:
See General Notes Nos. 1, 2, 3, 4, 5, 6, 8 and 9. See Index No. 402 for approach connections to bridges.
For end anchorage assemblies see sheets elsewhere in this Index and the plans.

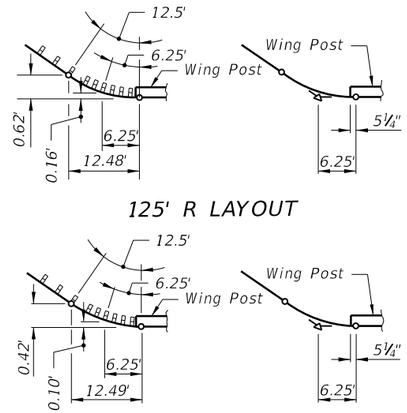

125' R LAYOUT

187' R LAYOUT
See General Note No. 13

STANDARD PANELS SET TO RADIALS ADJOINING BRIDGES
DETAIL W

GUARDRAIL APPLICATIONS FOR BRIDGES WITH LESS THAN FULL WIDTH SHOULDERS AND SAFETY SHAPE TRAFFIC RAILING BARRIER EXTENDING LESS THAN FULL APPROACH SLAB LENGTH

LAST REVISION	REVISION	DESCRIPTION:			INDEX NO.	SHEET NO.
07/01/07			FDOT DESIGN STANDARDS 2013	GUARDRAIL	400	7

C:\d\projects\standards\roadway\00400~s\00400.dgn rd960rh 1:57:41 PM 6/28/2012

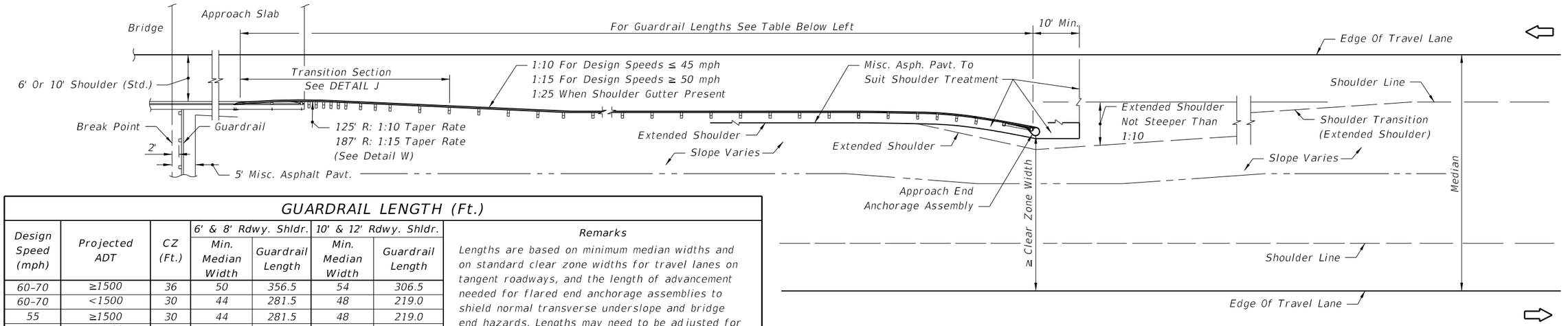

GUARDRAIL LENGTH (Ft.)

Design Speed (mph)	Projected ADT	CZ (Ft.)	6' & 8' Rdwy. Shldr. Min. Median Width	6' & 8' Rdwy. Shldr. Guardrail Length	10' & 12' Rdwy. Shldr. Min. Median Width	10' & 12' Rdwy. Shldr. Guardrail Length
60-70	≥1500	36	50	356.5	54	306.5
60-70	<1500	30	44	281.5	48	219.0
55	≥1500	30	44	281.5	48	219.0
55	<1500	24	38	194.0	42	144.0
45-50	≥1500	24	38	194.0	42	144.0
45-50	<1500	20	34	144.0	38	94.0
45-50	Urban w/o Curb	24	38	194.0	42	144.0
35-40	Urban w/o Curb	18	32	144.0	36	81.5

Remarks

Lengths are based on minimum median widths and on standard clear zone widths for travel lanes on tangent roadways, and the length of advancement needed for flared end anchorage assemblies to shield normal transverse underslope and bridge end hazards. Lengths may need to be adjusted for auxiliary lanes, curved roadways, parallel end anchorage assemblies, skewed crossings and other hazards present.

Note: For approach end anchorage assemblies see sheets elsewhere in this Index and the plans.

WHEN END TERMINAL IS OUTSIDE OF OPPOSING ROADWAY CLEAR ZONE

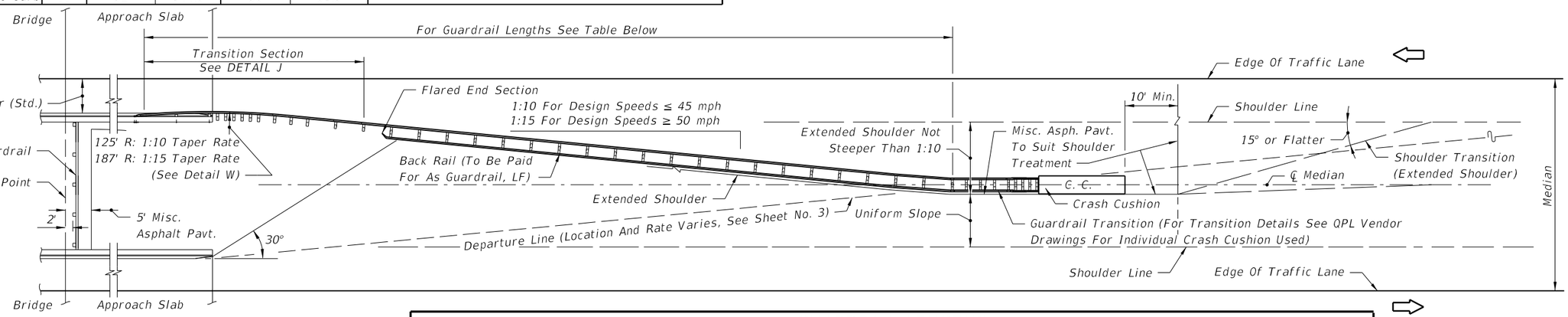

GUARDRAIL LENGTHS

Median Width (Ft.)	1:10 TAPER RATE								1:15 TAPER RATE							
	6' Bridge Shoulder				10' Bridge Shoulder				6' Bridge Shoulder				10' Bridge Shoulder			
	Panels (No.)			Length (Ft.)	Panels (No.)			Length (Ft.)	Panels (No.)			Length (Ft.)	Panels (No.)			Length (Ft.)
	Front	Back	Total	Total	Front	Back	Total	Total	Front	Back	Total	Total	Front	Back	Total	Total
32	9.5	6	15.5	193.75	6.5	4	10.5	131.25	13.5	10	23.5	293.75	8.5	6	14.5	181.25
34	10.5	7	17.5	218.75	7.5	5	12.5	156.25	14.5	11	25.5	318.75	9.5	7	16.5	206.25
36	10.5	7	17.5	218.75	7.5	5	12.5	156.25	15.5	12	27.5	343.75	10.5	8	18.5	231.25
38	11.5	8	19.5	243.75	8.5	6	14.5	181.25	16.5	13	29.5	368.75	11.5	9	20.5	256.25
40	12.5	9	21.5	268.75	9.5	6	15.5	193.75	17.5	13	30.5	381.25	13.5	11	24.5	306.25
42	13.5	9	22.5	281.25	10.5	7	17.5	218.75	19.5	15	34.5	431.25	14.5	11	25.5	318.75
44	14.5	10	24.5	306.25	10.5	7	17.5	218.75	20.5	16	36.5	456.25	15.5	12	27.5	343.75
46	14.5	10	24.5	306.25	11.5	8	19.5	243.75	21.5	17	38.5	481.25	16.5	13	29.5	368.75
48	15.5	11	26.5	331.25	12.5	9	21.5	268.75	22.5	17	39.5	493.75	17.5	13	30.5	381.25

The lengths shown on this table are typical for roadways with standard width shoulders. Length requirements shall be determined on a site specific basis for both standard width and narrow bridge shoulders and end anchorage or end shielding use.

WHEN END TERMINAL CANNOT BE LOCATED OUTSIDE OF OPPOSING ROADWAY CLEAR ZONE

APPROACH GUARDRAIL TREATMENTS FOR BRIDGES WITH SAFETY SHAPE TRAFFIC RAILING EXTENDING FULL APPROACH SLAB LENGTH IN WIDE MEDIANS WITH FLUSH SHOULDERS

C:\d\projects\standards\roadway\00400-s\00400.dgn rd960rh 1:57:41 PM 6/28/2012

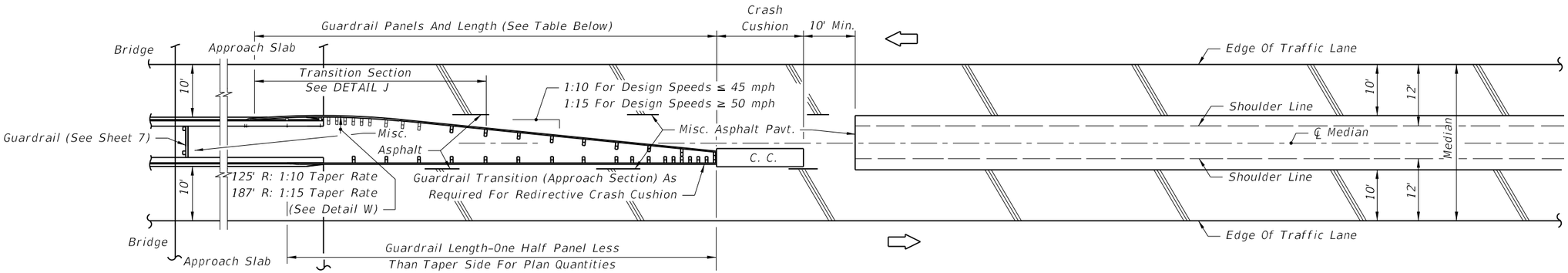

MEDIANS WITH 10' BRIDGE SHOULDERS

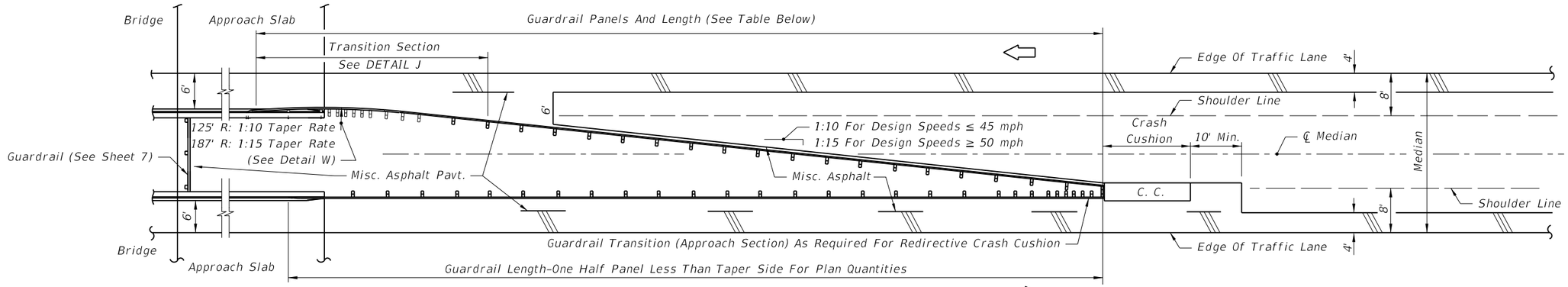

MEDIANS WITH 6' BRIDGE SHOULDERS

Note: The guardrail configurations shown apply only to parallel or near parallel bridges with open medians.

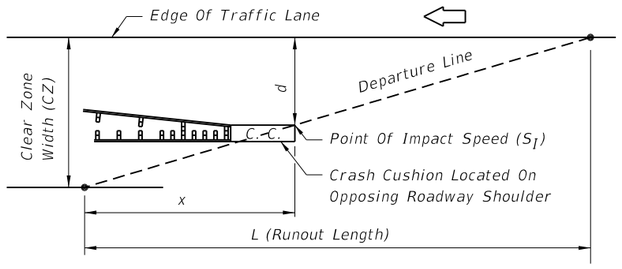

Speed (S_I) For Determining Crash Cushion Size:

$$S_I = \frac{x}{L}\,(\text{Design Speed}) = \left[\frac{(CZ-d)}{CZ}\right]\,\text{Design Speed}$$

SIZING CRASH CUSHIONS LOCATED ON OPPOSING ROADWAY SHOULDERS

GUARDRAIL LENGTHS

MEDIAN WIDTH (Ft.)	6' BRIDGE SHOULDERS				10' BRIDGE SHOULDERS			
	1:10 TAPER RATE		1:15 TAPER RATE		1:10 TAPER RATE		1:15 TAPER RATE	
	PANELS (No.)	LENGTH (Ft.)	PANELS (No.)	LENGTH (Ft.)	PANELS (No.)	LENGTH (Ft.)	PANELS (No.)	LENGTH (Ft.)
30	14.5	181.25	20.5	256.25	7.5	93.75	10.5	131.25
28	12.5	156.25	18.5	231.25	6.5	81.25	8.5	106.25
26	11.5	143.75	15.5	193.75	5.5*	68.75	6.5	81.25
24	9.5	118.75	13.5	168.75	5.5*	68.75	5.5*	68.75

The lengths shown in this table are based on standard widths for roadway and bridge median shoulders. Length requirements for both standard width and narrow bridge shoulders and end anchorage or end shielding requirements shall be determined on a site specific basis. When crash cushions are required on opposing roadway shoulders, their sizes may be determined by the residual speeds (S_I's) along the runouts from the approach roadways; however, when calculated speeds (S_I's) are less than 30 mph; crash cushions shall be no less in size than for 30 mph, see speed diagram left. The number of panels may be reduced when installing a crash cushion more than 2.5' in width, see * below.

* Number shown is the minimum number of panels plus a W-Thrie beam transition panel; single faced guardrail must have a length of five (5) or more panels.

APPROACH GUARDRAIL TREATMENTS FOR BRIDGES WITH SAFETY SHAPE TRAFFIC RAILING EXTENDING FULL APPROACH SLAB LENGTH IN NARROW MEDIANS WITH FLUSH SHOULDERS

6/28/2012 1:57:50 PM rd960rh C:\d\projects\standards\roadway\00400-s\00400.dgn

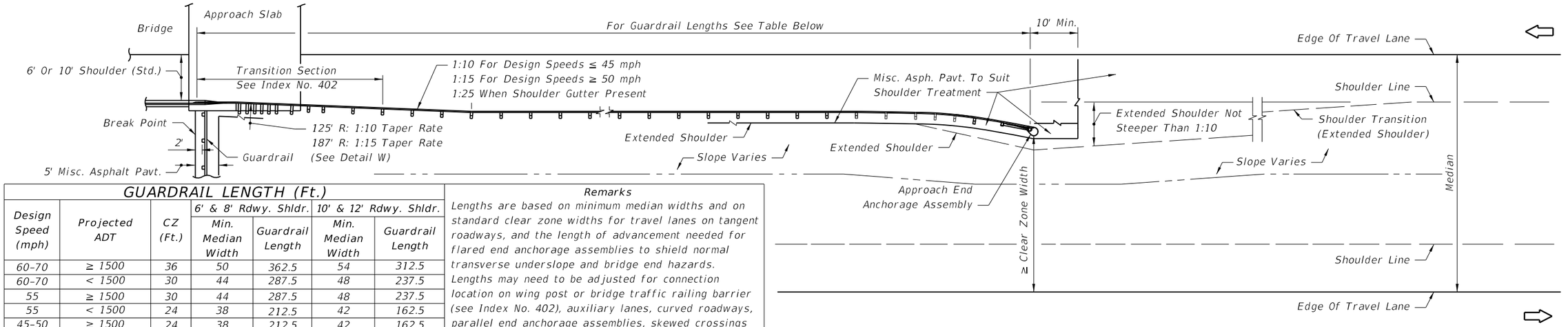

GUARDRAIL LENGTH (Ft.)						
Design Speed (mph)	Projected ADT	CZ (Ft.)	6' & 8' Rdwy. Shldr.		10' & 12' Rdwy. Shldr.	
			Min. Median Width	Guardrail Length	Min. Median Width	Guardrail Length
60–70	≥ 1500	36	50	362.5	54	312.5
60–70	< 1500	30	44	287.5	48	237.5
55	≥ 1500	30	44	287.5	48	237.5
55	< 1500	24	38	212.5	42	162.5
45–50	≥ 1500	24	38	212.5	42	162.5
45–50	< 1500	20	34	162.5	38	112.5
45–50	Urban w/o Curb	24	38	212.5	42	162.5
35–40	Urban w/o Curb	18	32	162.5	36	100.0

Remarks

Lengths are based on minimum median widths and on standard clear zone widths for travel lanes on tangent roadways, and the length of advancement needed for flared end anchorage assemblies to shield normal transverse underslope and bridge end hazards. Lengths may need to be adjusted for connection location on wing post or bridge traffic railing barrier (see Index No. 402), auxiliary lanes, curved roadways, parallel end anchorage assemblies, skewed crossings and other hazards present. When the wing post is replaced by bridge traffic railing barrier, reference Detail J and see Index No. 402.

Note: For approach end anchorage assemblies see sheets elsewhere in this Index and the plans.

WHEN END TERMINAL IS OUTSIDE OF OPPOSING ROADWAY CLEAR ZONE

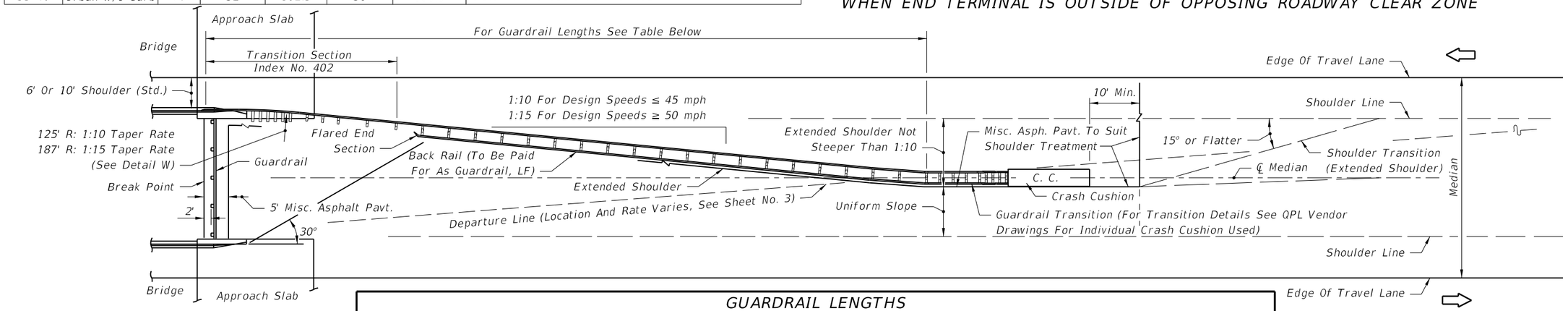

GUARDRAIL LENGTHS																
Median Width (ft.)	1:10 TAPER RATE								1:15 TAPER RATE							
	6' Bridge Shoulder				10' Bridge Shoulder				6' Bridge Shoulder				10' Bridge Shoulder			
	Panels (No.)			Length (Ft.)	Panels (No.)			Length (Ft.)	Panels (No.)			Length (Ft.)	Panels (No.)			Length (Ft.)
	Front	Back	Total	Total	Front	Back	Total	Total	Front	Back	Total	Total	Front	Back	Total	Total
32	7.5	6	13.5	168.75	4.5	3	7.5	93.75	11.5	9	20.5	256.25	7.5	6	13.5	168.75
34	8.5	6	14.5	181.25	5.5	4	9.5	118.75	12.5	10	22.5	281.25	7.5	6	13.5	168.75
36	9.5	7	16.5	206.25	6.5	5	11.5	143.75	13.5	11	24.5	306.25	8.5	7	15.5	193.75
38	10.5	8	18.5	231.25	7.5	6	13.5	168.75	14.5	12	26.5	331.25	10.5	9	19.5	243.75
40	10.5	8	18.5	231.25	7.5	6	13.5	168.75	16.5	13	29.5	368.75	11.5	9	20.5	256.25
42	11.5	8	19.5	243.75	8.5	6	14.5	181.25	17.5	14	31.5	393.75	12.5	10	22.5	281.25
44	12.5	9	21.5	268.75	9.5	7	16.5	206.25	18.5	15	33.5	418.75	13.5	11	24.5	306.25
46	12.5	9	21.5	268.75	10.5	8	18.5	231.25	19.5	16	35.5	443.75	14.5	12	26.5	331.25
48	14.5	11	25.5	318.75	11.5	9	20.5	256.25	20.5	16	36.5	456.25	16.5	13	29.5	368.75

The lengths shown on this table are typical for roadways with standard width shoulders and a relocated connection to the existing wing post. When the wing post is replaced by bridge traffic railing barrier, reference Detail J and see Index No. 402. Length requirements shall be determined on a site specific basis for both standard width and narrow bridge shoulders and for end anchorage or end shielding use.

WHEN END TERMINAL CANNOT BE LOCATED OUTSIDE OF OPPOSING ROADWAY CLEAR ZONE

APPROACH GUARDRAIL TREATMENTS FOR BRIDGES WITH SAFETY SHAPE TRAFFIC RAILING EXTENDING LESS THAN FULL APPROACH SLAB LENGTH IN WIDE MEDIANS WITH FLUSH SHOULDERS

6/28/2012 1:57:51 PM rd960rh C:\d\projects\standards\roadway\00400-s\00400.dgn

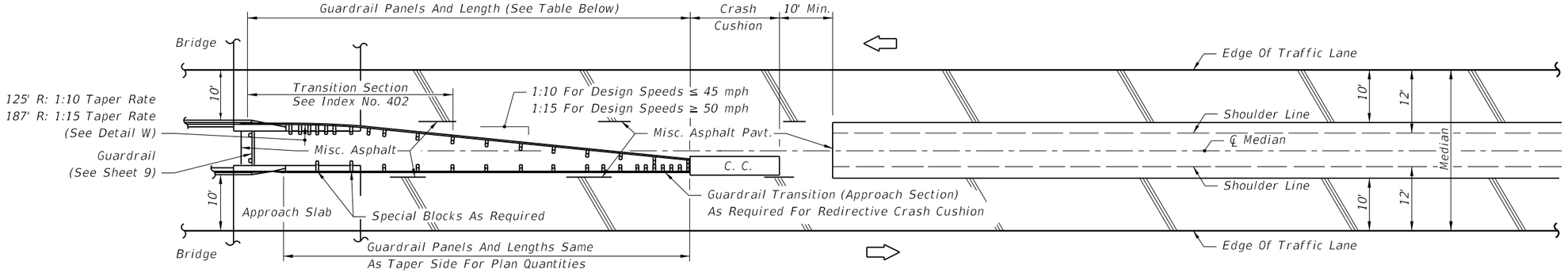

MEDIANS WITH 10' BRIDGE SHOULDERS

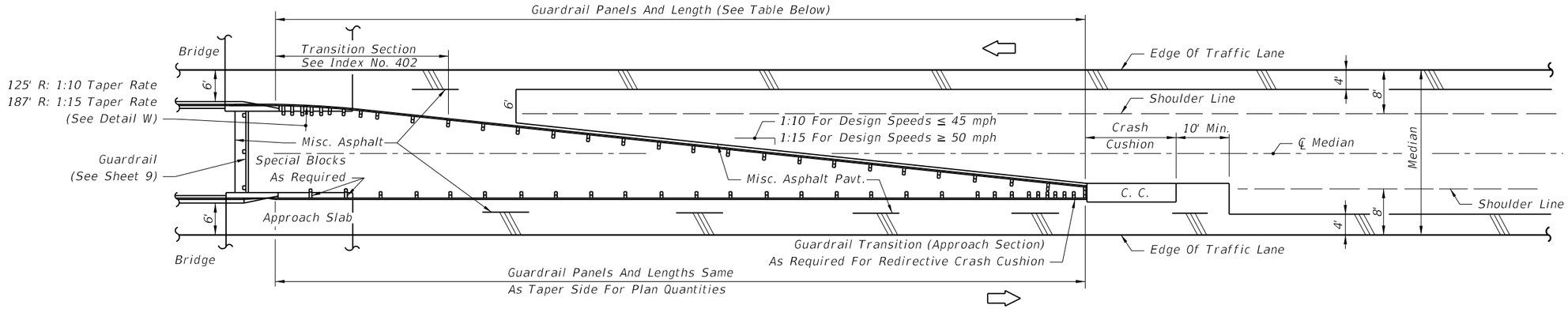

MEDIANS WITH 6' BRIDGE SHOULDERS

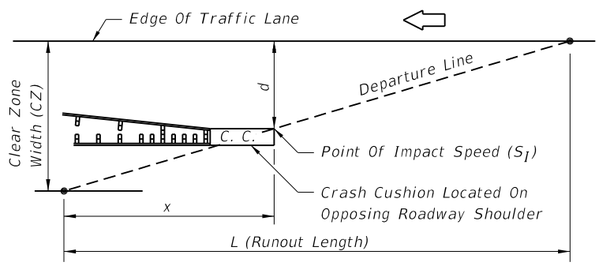

Speed (S_I) For Determining Crash Cushion Size:

$$S_I = \frac{x}{L}\,(\text{Design Speed}) = \left[\frac{(CZ-d)}{CZ}\right]\,\text{Design Speed}$$

SIZING CRASH CUSHIONS LOCATED ON OPPOSING ROADWAY SHOULDERS

Note: The guardrail configurations shown apply only to parallel or near parallel bridges with open medians.

GUARDRAIL LENGTHS

MEDIAN WIDTH (Ft.)	6' BRIDGE SHOULDERS				10' BRIDGE SHOULDERS			
	1:10 TAPER RATE		1:15 TAPER RATE		1:10 TAPER RATE		1:15 TAPER RATE	
	PANELS (No.)	LENGTH (Ft.)	PANELS (No.)	LENGTH (Ft.)	PANELS (No.)	LENGTH (Ft.)	PANELS (No.)	LENGTH (Ft.)
30	12.5	156.25	18.5	231.25	6.5	81.25	9.5	118.75
28	11.5	143.75	16.5	206.25	5.5	68.75	7.5	93.75
26	9.5	118.75	14.5	181.25	5.5*	68.75	5.5*	68.75
24	8.5	106.25	11.5	143.75	5.5*	68.75	5.5*	68.75

The lengths shown in this table are based on standard widths for roadway and bridge median shoulders. Length requirements for both standard width and narrow bridge shoulders and end anchorage or end shielding requirements shall be determined on a site specific basis. When crash cushions are required on opposing roadway shoulders, their sizes may be determined by the residual speeds (S_I's) along the runouts from the approach roadways; however, when calculated speeds (S_I's) are less than 30 mph crash cushions shall be no less in size than for 30 mph; see speed diagram left. The number of panels may be reduced when installing a crash cushion more than 2.5' in width; see * below.

*Number shown is the minimum number of panels plus a W-Thrie beam transition panel; single faced guardrail must have a length of five (5) or more panels.

APPROACH GUARDRAIL TREATMENTS FOR BRIDGES WITH SAFETY SHAPE TRAFFIC RAILING EXTENDING LESS THAN FULL APPROACH SLAB LENGTH IN NARROW MEDIANS WITH FLUSH SHOULDERS

C:\d\projects\standards\roadway\00400-s\00400.dgn rd960rh 1:57:52 PM 6/28/2012

LEGEND

(1) Edge of traffic lane for simple curve turnouts.
Edge of travel lane for taper turnouts.

(2) Taper.

(3) Pavement return (radius R_1).

(4) Flared end anchorage to be installed except when existing guardrail on intersecting drive or side road adjoins the project.

(5) Post for locating flare, proximate to PC or PT:
No. 2 post for Radii 25' or less.
No. 3 post for Radii > 25' and < 50'.
Between No. 4 and No. 5 posts for Radii 50' or greater.

(6) Post for locating flare, proximate to PC or PT:
No. 3 post for Radii 25' or less.
Between No. 4 and No. 5 posts for Radii greater than 25'.

(7) Expanded shoulder for guardrail.

(8) Expanded shoulder for flared guardrail end anchorage.

(9) Shoulder in absence of guardrail.

(10) Flared end anchorage assembly.

(11) Radial guardrail to be installed when guardrail required on the intersecting drive or side road (radius R_2).

(12) End anchorage Type II (radial return only).

(13) Guardrail installation limited to roadway right of way unless otherwise called for in the plans.

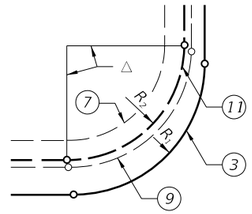

RADIAL GUARDRAIL

RADIAL GUARDRAIL

R_1	Normal Turnouts					
	Taper			Simple Curve		
	R_2	Panels Required	△	R_2	Panels Required	△
15'	25'	3	85°56'	25'	3	85°56'
20'	25'	3	85°56'	25'	3	85°56'
25'	25'	3	85°56'	25'	3	85°56'
30'	25'	3	85°56'	25'	3	85°56'
35'	25'	3	85°56'	25'	3	85°56'
40'	40'	5	89°31'	40'	5	89°31'
45'	40'	5	89°31'	40'	5	89°31'
50'	40'	5	89°31'	40'	5	89°31'

Note: Only 25' and 40' radius panels are to be used for return guardrail on normal turnouts. On skewed turnouts the number of panels used and their arrangement with straight panels will be as shown in the plans or as directed by the Engineer.

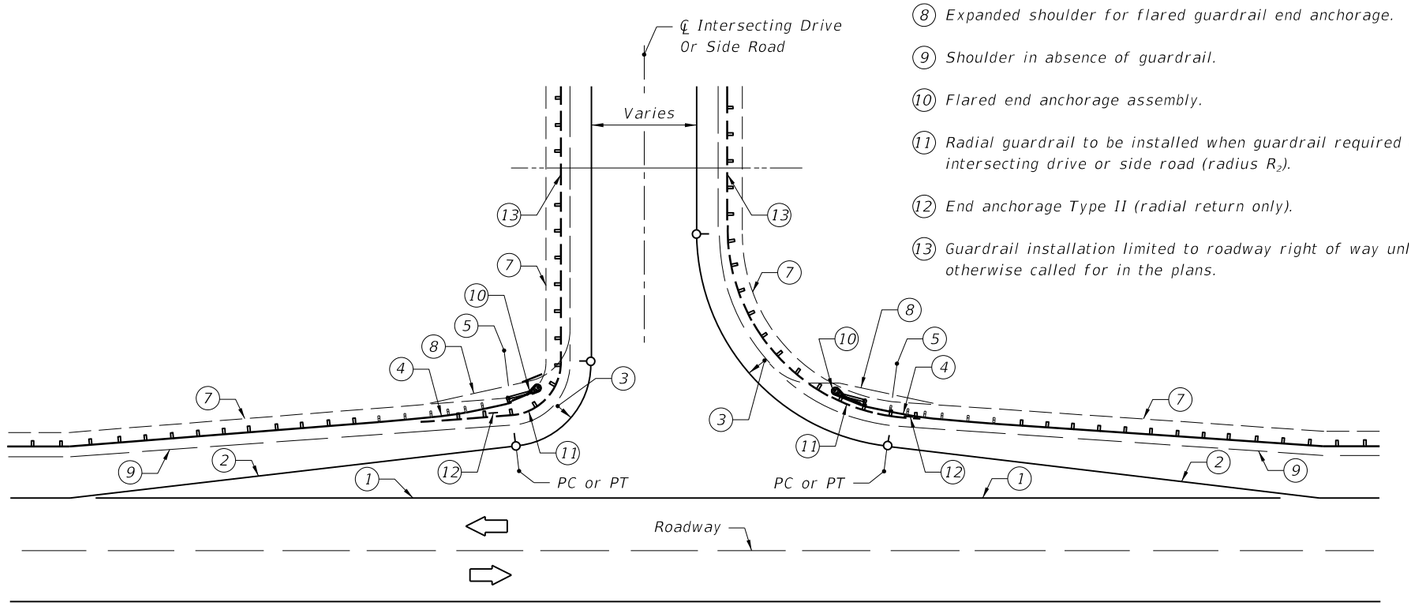

TAPER TURNOUTS

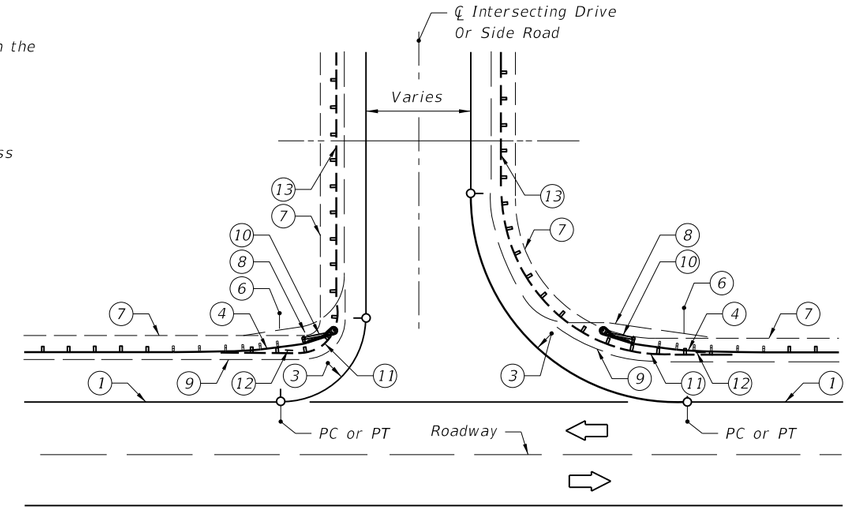

SIMPLE CURVE TURNOUTS

Note: The guardrail application shown on this sheet are for highways with flush shoulders and no restraints for constructing flared end anchorages and minimum lengths of guardrail. For highways with flush shoulders and restraints to constructing flared anchorages, see General Note No. 6.

Where openings in guardrail are required in close proximity to bridge traffic rails or ends of concrete barrier walls, and minimum length guardrail with flared end anchorages can not be applied, either controlled release returns or energy absorbing terminals are to be applied.

GUARDRAIL APPLICATIONS FOR INTERSECTING DRIVES AND SIDE ROADS ON RURAL FACILITIES

LAST REVISION	REVISION	DESCRIPTION:				
04			FDOT DESIGN STANDARDS 2013	GUARDRAIL	INDEX NO. 400	SHEET NO. 12

6/28/2012 1:57:52 PM rd960rh C:\d\projects\standards\roadway\00400-s\00400.dgn

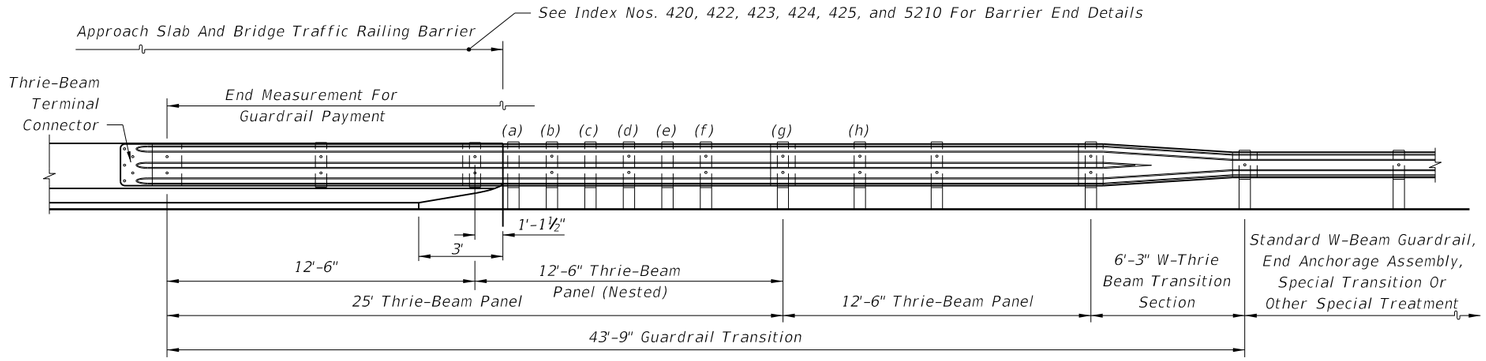

ELEVATION

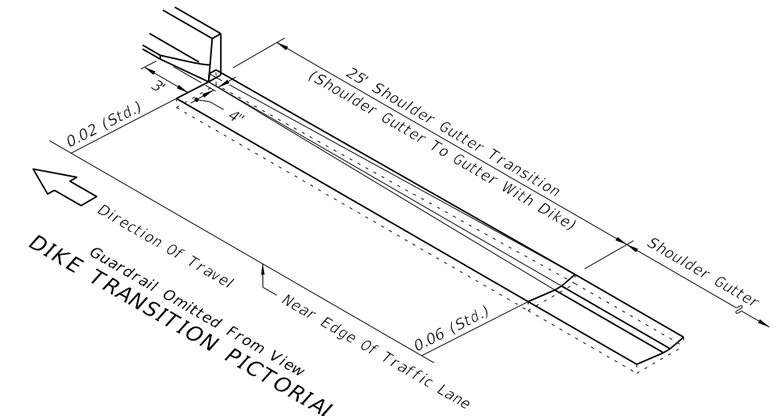

DIKE TRANSITION PICTORIAL

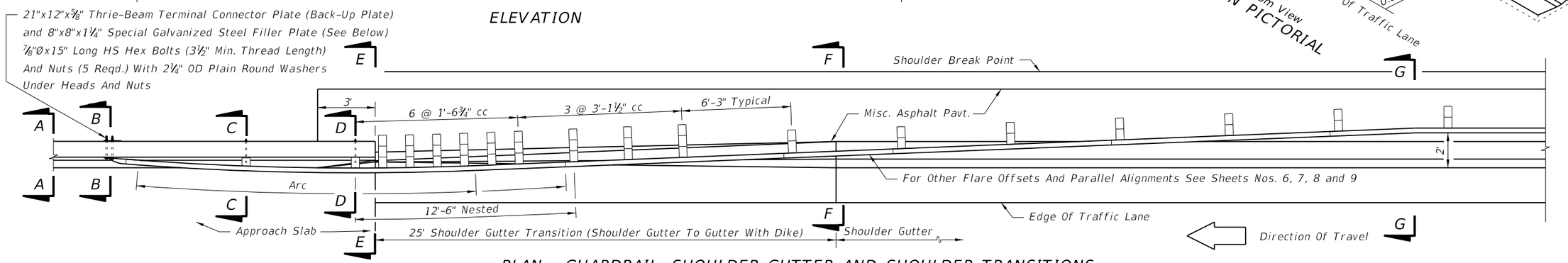

PLAN - GUARDRAIL, SHOULDER GUTTER AND SHOULDER TRANSITIONS

⅝" Øx18.5" Long Upper And 17.5" Long Lower Post Bolt And Nut With 1¾" OD Steel Washers Under Nuts

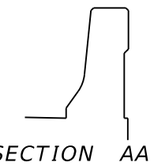

SECTION AA

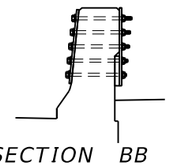

SECTION BB

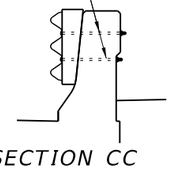

SECTION CC

⅝" Øx20" Long Upper And 19" Long Lower Post Bolt And Nut With 1¾" OD Steel Washers Under Nuts

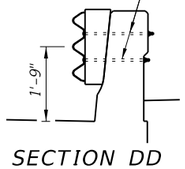

SECTION DD

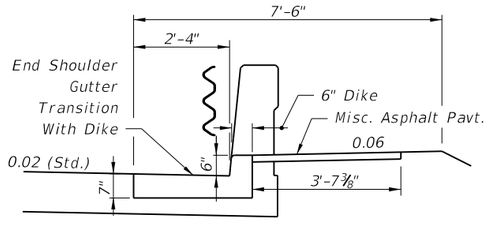

SECTION EE

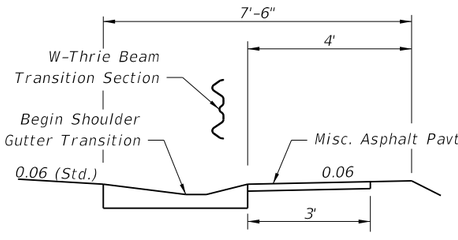

SECTION FF

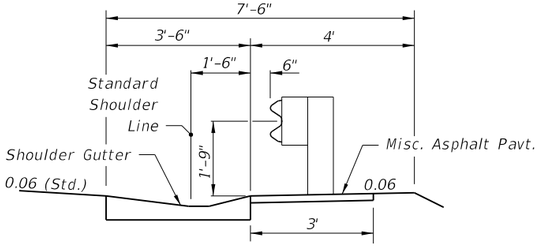

SECTION GG

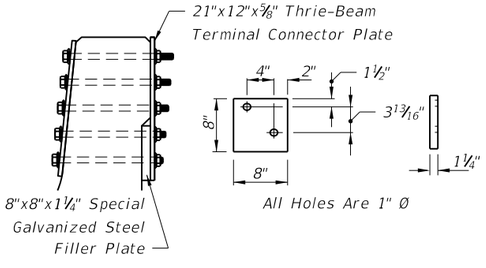

SPECIAL GALVANIZED STEEL FILLER PLATE FOR USE AT SECTION BB

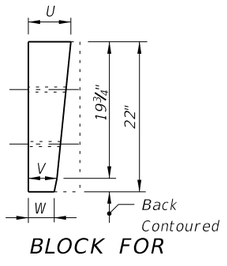

BLOCK FOR SECTION CC

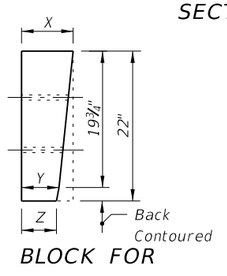

BLOCK FOR SECTION DD

APPLICATIONS	SECTION CC			SECTION DD		
	U	V	W	X	Y	Z
Single Face Guardrail	6⅛"	4⅛"	3⅝"	7½" nom.	5½" nom.	5" nom.
Double Face Guardrail With Timber Posts	5⅛"	3⅛"	2⅝"	6½" nom.	4½" nom.	4" nom.
Double Face Guardrail With Steel Posts	4⅜"	2⅜"	1⅞"	5¾"	3¾"	3¼"

For Double Face Guardrail Connections To Median Bridge Traffic Railing Barrier, See Index No. 410, 'Guardrail Connection To Concrete Barrier Wall Approach Ends'.

GUARDRAIL TRANSITION NOTE

When shoulder gutter is required, the 25' long dike transition, shown in the 'PLAN' and 'PICTORIAL' above, is required. Double offset blocks are shown for guardrail installations adjacent to shoulder gutter/dike transitions; single offset blocks shall be installed in absence of shoulder gutter. Nested rails shall not be bolted to the blocks and posts at posts (a), (c), and (e). One 16d galvanized nail shall be driven between each post and block, and between double blocks, in order to prevent block rotation, see '16d NAIL FOR PREVENTION OF OFFSET BLOCK ROTATION', this Index.

THRIE-BEAM OFFSET BLOCKS FIELD TRIMMED FOR USE AT SECTIONS CC & DD

GUARDRAIL APPROACH TRANSITION AND CONNECTION FOR BRIDGES WITH SAFETY SHAPE TRAFFIC RAILING BARRIERS EXTENDING FULL LENGTH OF APPROACH SLAB

DETAIL J

C:\d\projects\standards\roadway\00400-s\00400.dgn rd960rh 1:57:53 PM 6/28/2012

LAST REVISION	REVISION	DESCRIPTION:		FDOT DESIGN STANDARDS 2013	GUARDRAIL	INDEX NO.	SHEET NO.
07/01/12						400	13

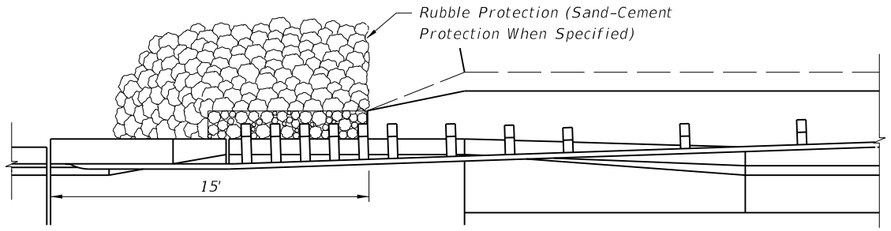

BRIDGES OVER STREAMS

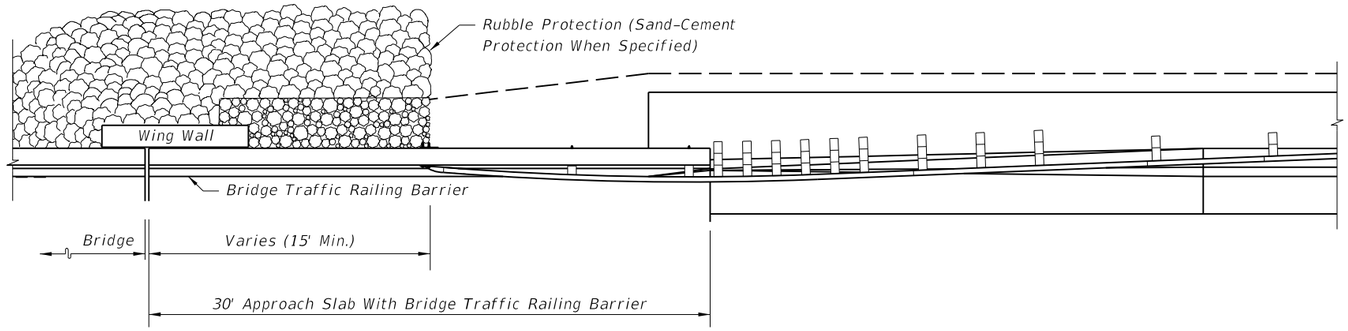

BRIDGES OVER STREAMS

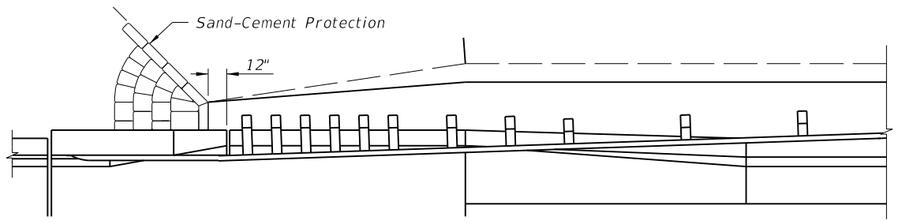

BRIDGES OVER RAILROADS

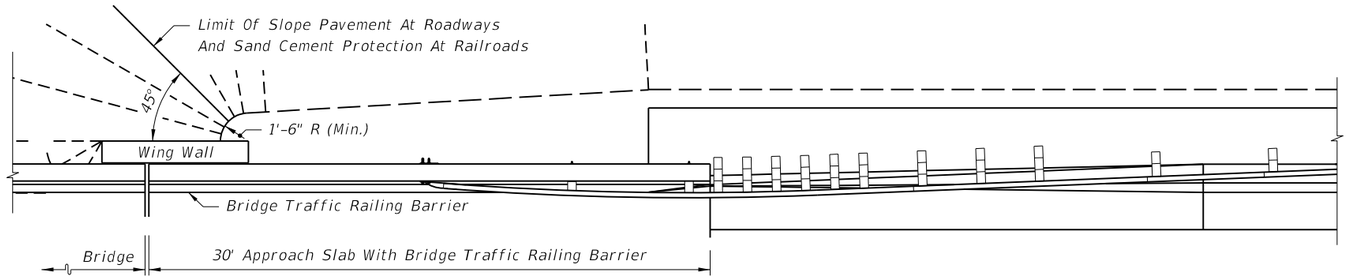

BRIDGES OVER ROADWAYS OR RAILROADS

For Additional Information See Index No. 402

SKETCHES - BRIDGES WITH SAFETY SHAPE TRAFFIC RAILING BARRIER EXTENDING LESS THAN FULL APPROACH SLAB LENGTH

For Additional Guardrail Information See Sheet 13

SKETCHES - BRIDGES WITH SAFETY SHAPE TRAFFIC RAILING BARRIER EXTENDING FULL APPROACH SLAB LENGTH

SKETCH NOTES

1. These sketches are for showing shoulder interface between roadways and bridges where crossings are normal to other roadways, railroads and streams. For site specific applications and details see the plans and the FDOT Structures Design Office "Detailing Manual" and "Design Guidelines".

2. Shoulder treatments shown in these sketches are for locations with shoulder gutter; shoulder hinge location will vary for facilities without shoulder gutter.

SHOULDER INTERFACE BETWEEN ROADWAYS AND BRIDGES

C:\d\projects\standards\roadway\00400-s\00400.dgn 6/28/2012 1:57:54 PM rd960rh

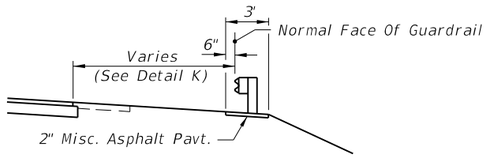

SHOULDER WITH OR WITHOUT 5' PAVEMENT

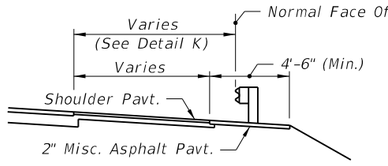

PAVED SHOULDERS

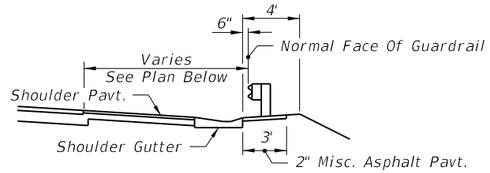

SHOULDER GUTTER

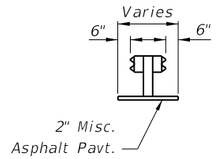

DOUBLE FACE RAIL

MISCELLANEOUS PAVING FOR STANDARD GUARDRAIL SECTIONS

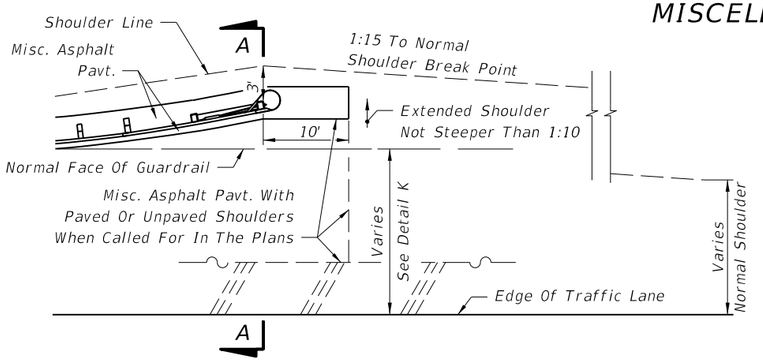

SHOULDER WITH OR WITHOUT 5' PAVEMENT

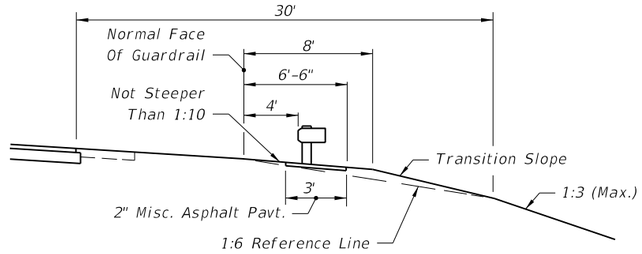

SECTION AA (EXAMPLE FOR 30' CLEAR ZONE)

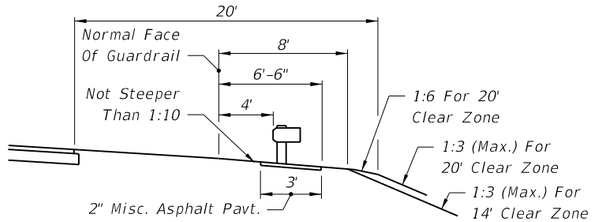

SECTION AA (EXAMPLE FOR 20' CLEAR ZONE)

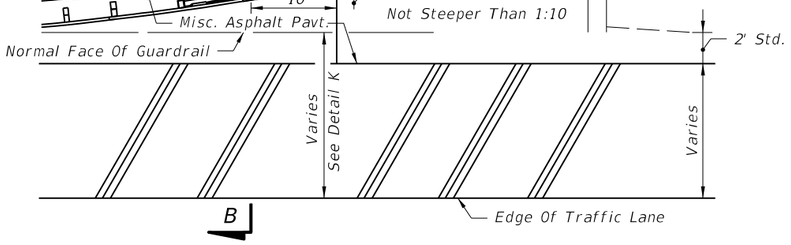

PAVED SHOULDERS

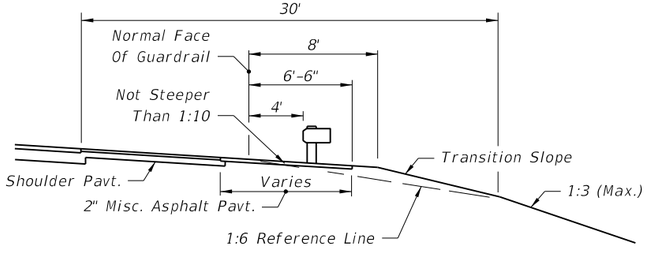

SECTION BB (EXAMPLE FOR 30' CLEAR ZONE)

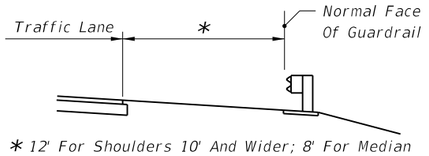

* 12' For Shoulders 10' And Wider; 8' For Median Shoulders 8' Or Less In Width; and, Shoulder Width Plus 2' For All Others Shoulders.

STANDARD LOCATIONS

For Guardrail on slopes see Sheet 26.

GUARDRAIL LOCATION-DETAIL K

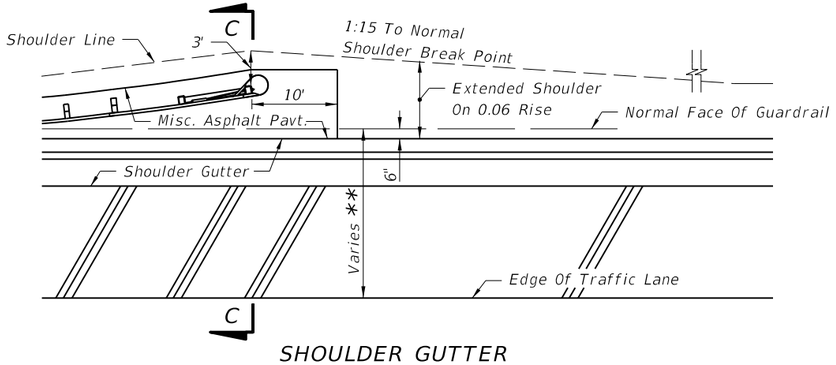

SHOULDER GUTTER

** 8' For 6' Shoulders 10' For 8' Shoulders 12' For 10' And 12' Shoulders Applies To Left And Right Side Shoulders. (See Index No. 525 For Shoulder Widths And Shoulder Gutter Locations On Ramps And Auxiliary Lanes)

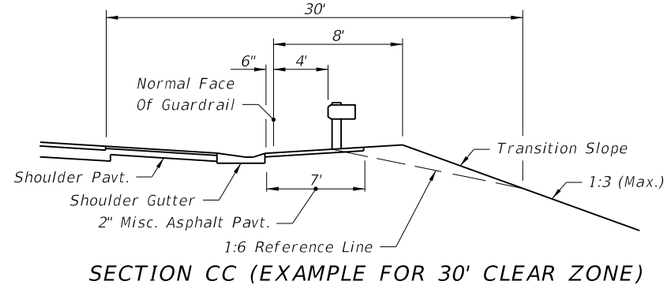

SECTION CC (EXAMPLE FOR 30' CLEAR ZONE)

SHOULDERS, SLOPES AND MISCELLANEOUS PAVING FOR FLARED END ANCHORAGE ASSEMBLIES

C:\d\projects\standards\roadway\00400-s\00400.dgn
rd960rh
1:57:54 PM
6/28/2012

LAST REVISION	REVISION	DESCRIPTION:			INDEX NO.	SHEET NO.
07/01/09			FDOT DESIGN STANDARDS 2013	GUARDRAIL	400	15

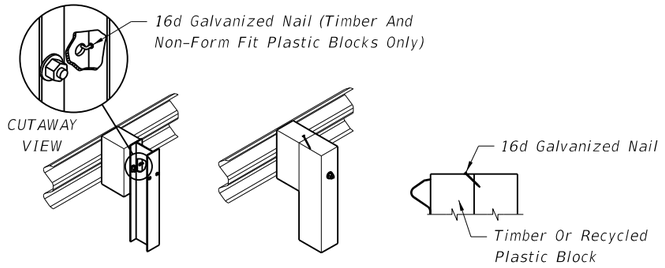

STEEL POST TIMBER POST

16d NAIL FOR PREVENTION OF OFFSET BLOCK ROTATION

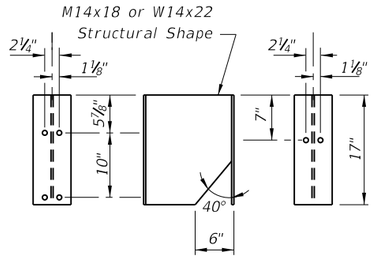

POST FACE SIDE VIEW TRAFFIC FACE

All Holes Are 13⁄16"Ø

STEEL MODIFIED THRIE-BEAM OFFSET BLOCK

PERMISSIBLE POST AND OFFSET BLOCK COMBINATIONS

POSTS	OFFSET BLOCKS	REMARKS
Timber	Timber 6"x8"x14" (Nominal) For W-Beam And 6"x8"x22" (Nominal) For Thrie-Beam Recycled Plastic (See Notes)	Post bolt hole in timber and plastic blocks to be centered ± ¼"). All timber offset blocks shall be dressed on all four sides (S4S). One 16d galvanized nail per block is to be used to prevent rotation of block (see detail left).
Steel W6x8.5, W6x9 Or 6" C	Timber 6"x8"x14" (Nominal) For W-Beam And 6"x8"x22" (Nominal) For Thrie-Beam Recycled Plastic (See Notes)	Same as above for timber and plastic blocks except that form fit plastic block holes align with holes in steel posts and do not require nails.
Steel W6x8.5, W6x9 Or 6" C	W14x22x17" (M14x18x17") (Steel Modified Thrie-Beam)	5⁄8"Øx1½" long hex head bolts with full length thread and nuts (2 Reqd.) and 5⁄8" plain round washers (4 Reqd.) for mounting steel block to post. Bolts are to be installed in opposite holes, top and bottom.

Notes: 1. Timber and recycled plastic offset blocks of identical size and shape can be intermixed within a run of rail.

2. Recycled plastic offset blocks shall meet the passing evaluation criteria for Test Level 3 crash tests. The blocks shall be tested as a component in a semi-rigid guardrail test article under full scale crash test conditions. The blocks shall be in conformance with Sections 536 and 972 of the Specifications and be included on the Qualified Products List. W-Beam blocks shall be 14" in height and thrie-beam blocks shall be 22" in height. The blocks shall be capable of providing a 7½" (Min.) offset. For additional information on plastic offset block installations refer to Sheet 1, GENERAL NOTE 16.

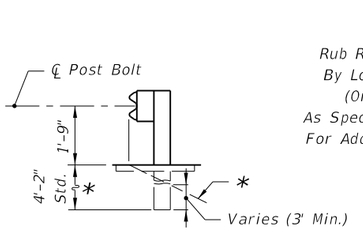

W-BEAM

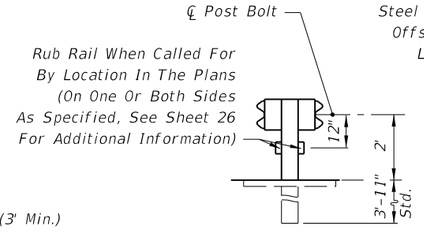

W-BEAM WITH RUB RAIL

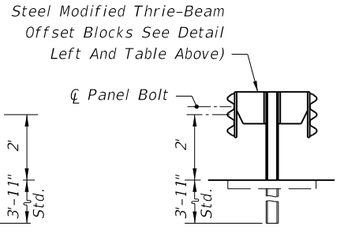

MODIFIED THRIE-BEAM

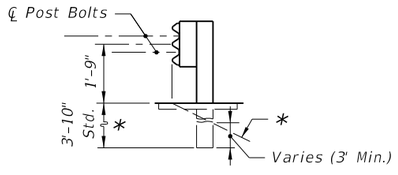

THRIE-BEAM

* Front Slope When Right Of Way, Environmental Or Other Restrictions Prohibit Normal Shoulder Extension

SINGLE FACED GUARDRAIL

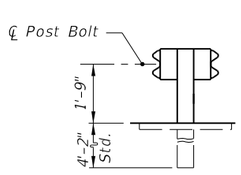

W-BEAM

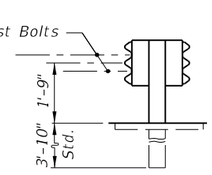

THRIE-BEAM

For Narrow Medians With No Median Swale. See Sheet 26 For Median With Swale.

DOUBLE FACED GUARDRAIL

MOUNTING HEIGHTS ON SHOULDERS AND IN MEDIANS

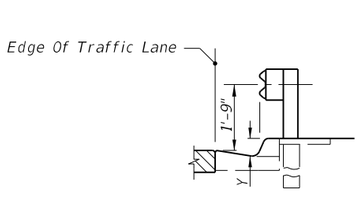

Y = 6" Or Greater

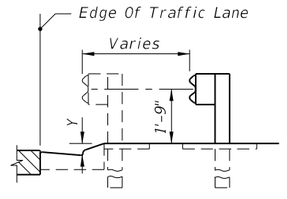

Y = Less Than 6"

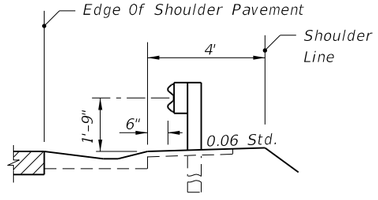

Shoulder Gutter

NOTE:
For location of guardrail with offset behind curb and gutter refer to the Plans Preparation Manual, Volume 1, Section 4.3.5.

LOCATION AT CURB & GUTTER SECTIONS-DETAIL L

C:\d*projects\standards\roadway\00400-s\00400.dgn rd960rh 1:57:55 PM 6/28/2012

LAST REVISION	REVISION	DESCRIPTION:		FDOT DESIGN STANDARDS 2013	GUARDRAIL	INDEX NO.	SHEET NO.
07/01/09						400	16

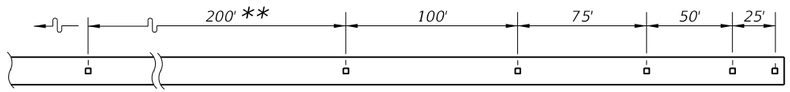

Note: Adjustment in spacing may be required to fit exact guardrail lengths as directed by the Engineer. For minimum installations (length 62.5') provide one reflector at each end and one at the approximate center.

** For curves greater than 2° the spacing shall be reduced to 100' increments through the curve.

REFLECTOR ELEMENT SPACING

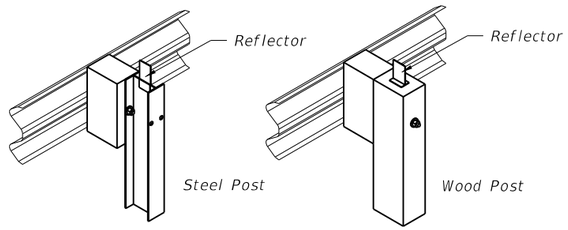

PICTORIAL VIEW
REFLECTOR MOUNTING

REFLECTORS-DETAIL M

REFLECTOR NOTES

1. Reflectors shall conform to Section 993 of the Standard Specifications.
2. Reflector color (white or yellow) shall conform to the color of the near lane edgeline.
3. Reflectors installed on median guardrail shall have retro-reflective sheeting on both sides of the reflector.
4. The cost for reflectors shall be included in the contract unit price for Guardrail.

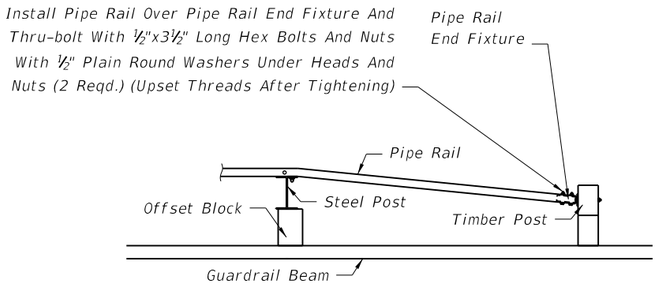

PLAN

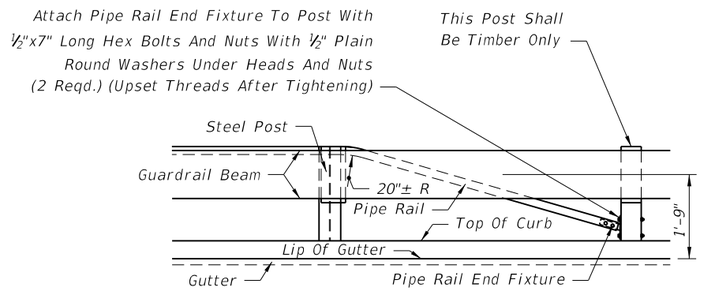

ELEVATION

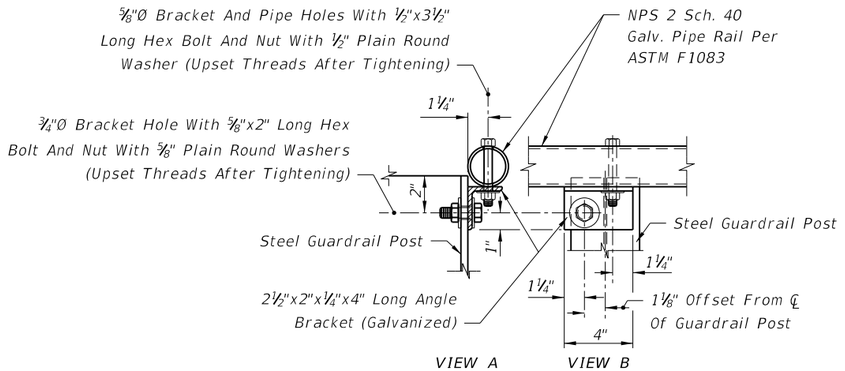

PIPE RAIL MOUNTING

NOTES

1. Pipe Rail is required on steel guardrail posts when the front of sidewalks or shared use paths are located 4' or less from behind the back of the post. Pipe rail shall not extend beyond the last post of the approach end anchorage assembly. Begin and end the Pipe Rail in accordance with the PIPE RAIL END FIXTURE detail.

   Refer to Sheet 1, GENERAL NOTE 6 for guardrail end treatment requirements.

2. When guardrail with timber posts are located with the back of post 4' or less from the near front of sidewalks or shared use paths, the bolt ends will require one of the following treatments:

   a. Trim back flush with the face of nut and metalize or
   b. Use post bolts 15" in length with washers and nuts counter sunk into sinks 1" to 1½" deep or
   c. Use post bolts 15" in length with sleeve nuts and washers.

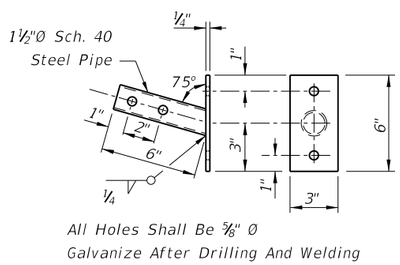

PIPE RAIL END FIXTURE

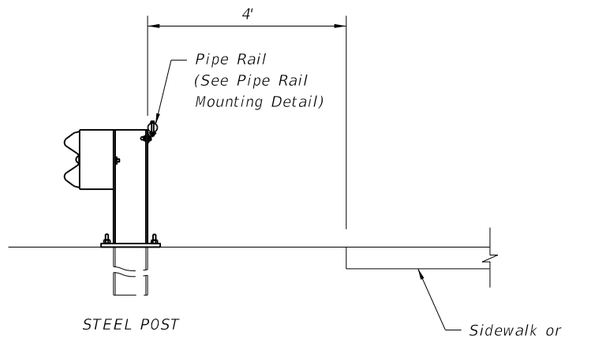

SECTION

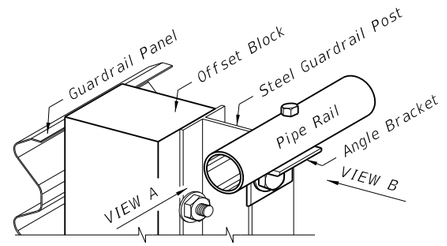

PICTORIAL

FOR LOCATIONS USED BY PEDESTRIANS OR BICYCLISTS

PEDESTRIAN SAFETY TREATMENTS

C:\d\projects\standards\roadway\00400-s\00400.dgn
rd960rh
1:57:56 PM
6/28/2012

LAST REVISION	REVISION	DESCRIPTION:			INDEX NO.	SHEET NO.
07/01/12			FDOT DESIGN STANDARDS 2013	GUARDRAIL	400	17

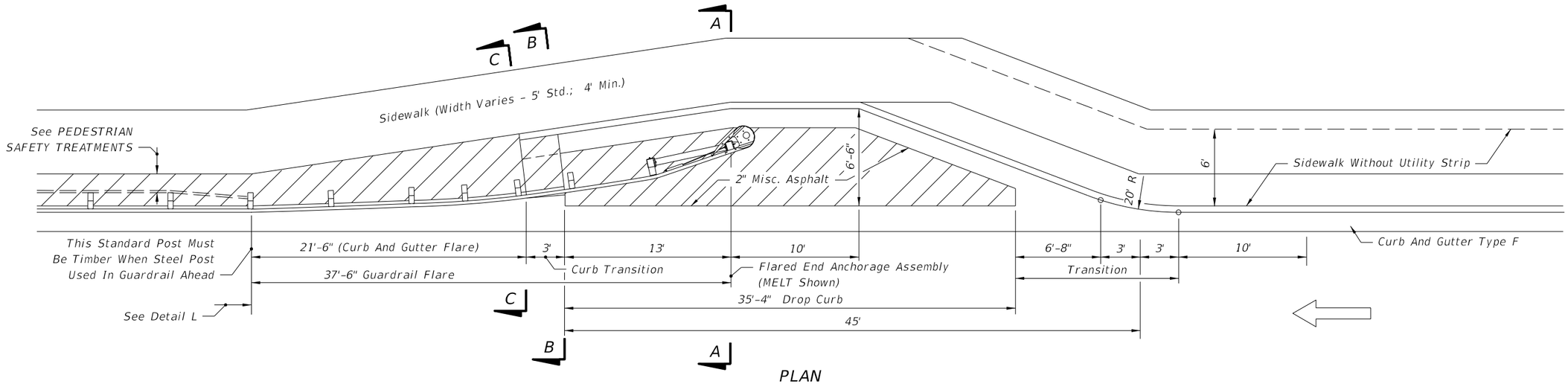

PLAN

Notes

1. Curb And Gutter Flare shall follow guardrail flare, see elsewhere in this Index for additional guardrail flare information.

2. For Specific Details, Offset Requirements, and End Treatments of Proprietary End Anchorage Assembly – Flared Systems, see the Qualified Products List (QPL).

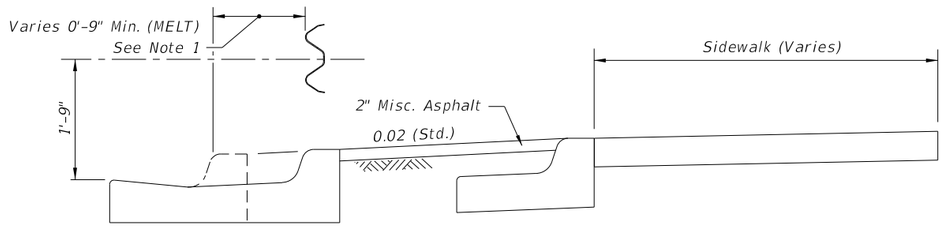

SECTION CC

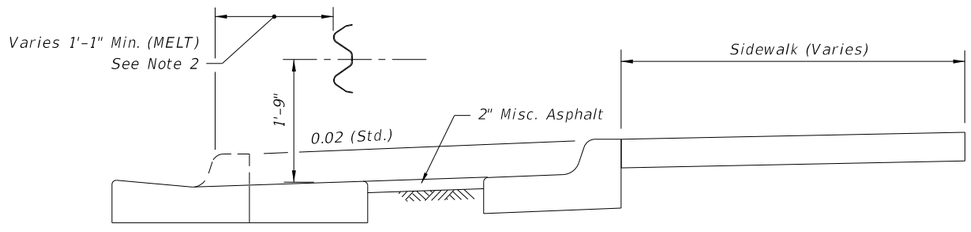

SECTION BB

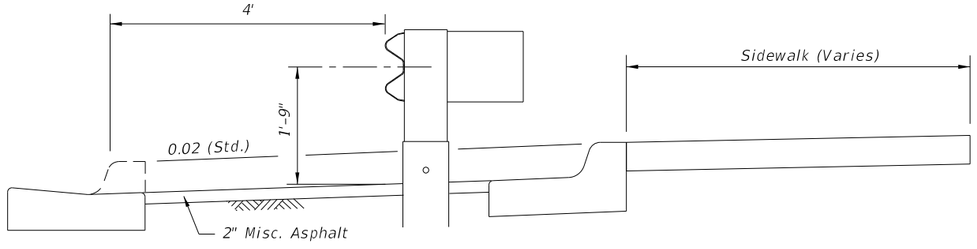

SECTION AA

APPROACH TREATMENT FOR CURB AND GUTTER

DETAIL Q

6/28/2012 1:57:57 PM rd960rh C:\d\projects\standards\roadway\00400-s\00400.dgn

LAST REVISION	REVISION	DESCRIPTION:		FDOT DESIGN STANDARDS 2013	GUARDRAIL	INDEX NO.	SHEET NO.
07/01/12						400	18

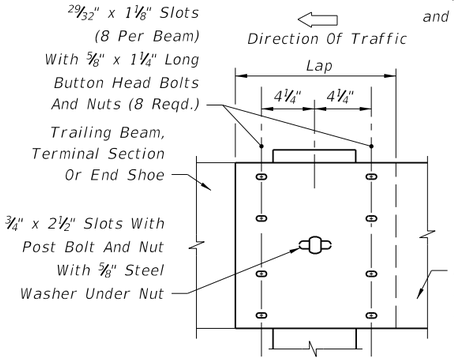

W-BEAM RAIL SPLICE

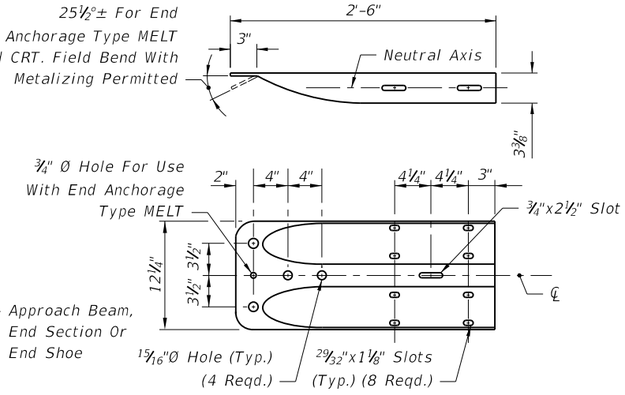

Note: ⅝"Ø Steel washer required with splice bolts

SPECIAL END SHOE

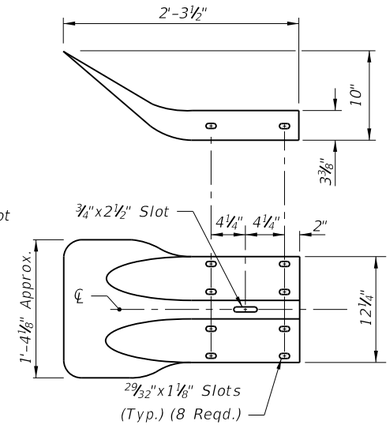

FLARED END SECTION

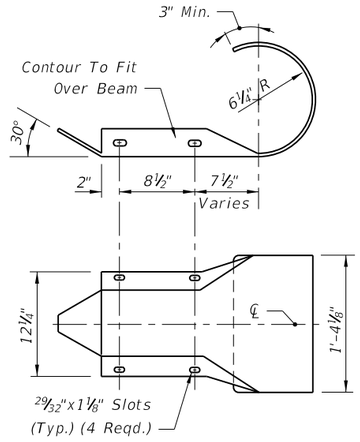

ROUNDED END SECTION

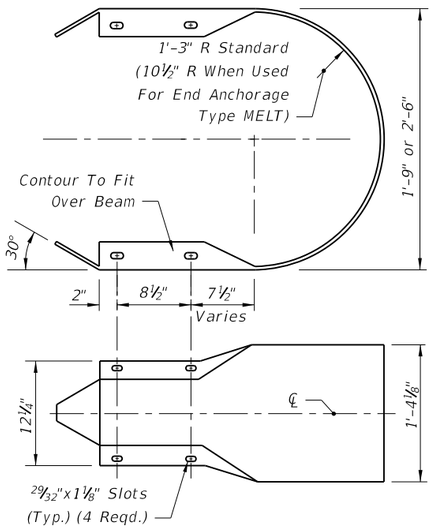

BUFFER END SECTION

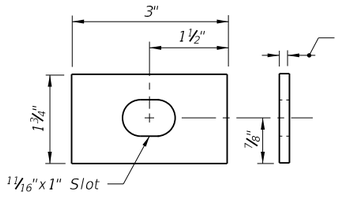

Note:
For beam washer requirements on end terminals, see individual end anchorage assembly details. Washers are to be used where necessary to accomplish alignment or where the posts bolt head shows tendency to pull through the rail slot. Washers installed on guardrail, between end anchorages, prior to July 1, 1990 may remain in place until the guardrail is relocated or until repairs require removal and reinstallment of a post bolt.

(RECTANGULAR PLATE WASHER) BEAM WASHER

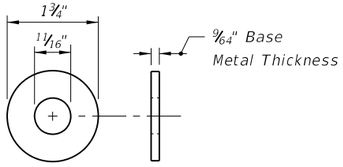

Note:
The round washer is not intended for use under the recess nut for the beam to beam rail splice. The washer is required under the recess nut for connecting the beam to the special end shoe; under the post bolt nut for connecting the beam to the timber post and offset blocks; for connecting the beam to steel posts with timber offset blocks; under the hex bolt head for securing the beam anchor plate to the beam; and, for general guardrail connections by ⅝" Ø hex bolts and nuts and under hex nut for connecting rub rail to wood and steel posts. For supplemental information see BEAM ANCHOR PLATE, PERMISSIBLE POST AND OFFSET BLOCK COMBINATIONS, individual end anchorage assembly details, SPECIAL STEEL GUARDRAIL POSTS, SPECIAL END SHOE, W-BEAM RAIL SPLICE, THRIE-BEAM RAIL SPLICE, and THRIE-BEAM TERMINAL CONNECTOR details.

⅝" STEEL WASHER

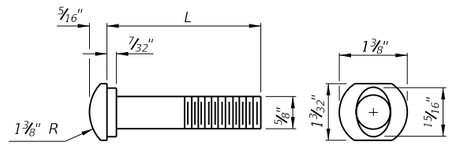

L (In.)	THREAD LENGTH (Min.) (In.)	APPLICATION
1¼"	Full Length	Rail Splice Bolt
10"	4"	Post Bolt – Single Or Double Faced Guardrail Timber Or Recycled Plastic Offset Block(s) On Steel Post As An Option, A Single 25"* Long Post Bolt May Be Used
18"	4"	Post Bolt – Single Faced Guardrail Timber Posts
25"*	4"	Post Bolt – Double Faced Guardrail Timber Posts Double Faced Guardrail Steel Posts

Special bolts having lengths of 10" or greater shall have a thread length of not less than 4".

For applications where special bolts having lengths greater than 25" are required, the Contractor may use a 5/8"Ø threaded rod (field cut to length). A hex nut and beam washer shall be used at the guardrail face with no more than ¾" of the threaded rod projecting beyond the top of the nut. The projecting thread on both ends shall be distorted to secure the nuts, and both ends of the threaded rod metalized with organic zinc-rich coating.

*Use of the 25" AASHTO-AGC-ARTBA standard length post bolt on double faced guardrail that results in the bolt projecting more than ¾" beyond the face of the nut after pull-up shall be trimmed to ¾" reveal and metalized with organic zinc-rich coating.

⅝" OVAL SHOULDER BUTTON HEAD BOLT

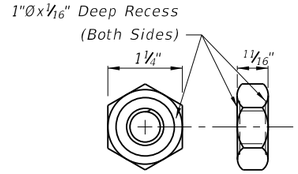

⅝" MODIFIED HEAVY HEX NUT (RECESSED NUT)

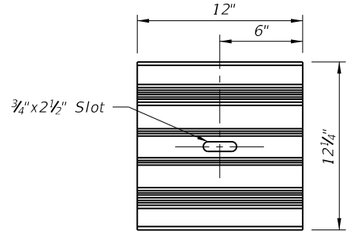

Note: For application information see individual end anchorage assembly details.

W-BEAM BACK-UP PLATE

OFFSETS (Ft.) Measured From Face Of Guardrail To Front Of Above Ground Rigid Hazard				
POST SPACING (Ft.)	SINGLE BEAM		NESTED BEAMS	
	W-Beam	Thrie-Beam	W-Beam	Thrie-Beam
6'-3"	4'-0"	3'-4"	N/A	N/A
3'-1½"	3'-0"	2'-8"	2'-8"	2'-4"
1'-6¾"	N/A	N/A	2'-4"	2'-0"

Note:
The values shown should be utilized unless changes are supported by empirical validation. Those desiring to develop offset values from the simulated deflection values shown in Table 5.4 of the AASHTO Roadside Design Guide are cautioned to proceed only if background in the table development is understood.

MINIMUM OFFSET FOR SINGLE FACED GUARDRAIL (Ft.)

HS Hex bolts for THRIE-BEAM TERMINAL CONNECTORS shall conform to the requirements of ASTM A449 (Type 1) with heavy hex nuts and washers. All other hex bolts shall conform to the requirements of ASTM A563. Bolts, nuts and washers shall be hot dip galvanized. Heavy hex nut may be used in lieu of hex nuts and hex nuts used for jam nuts.

HEX BOLTS AND NUTS

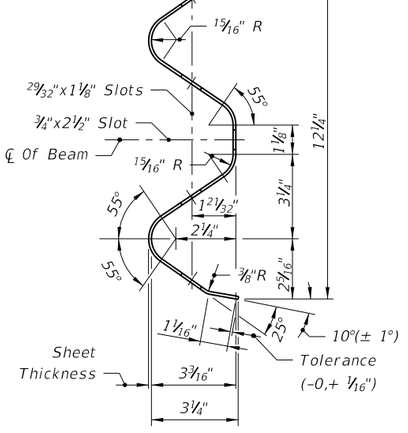

W-BEAM

C:\d\projects\standards\roadway\00400-s\00400.dgn
rd960rh
1:57:57 PM
6/28/2012

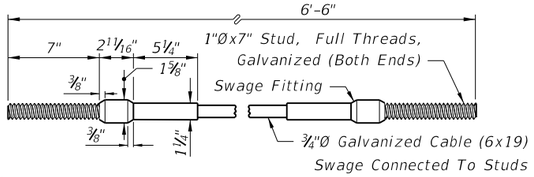

Note:
Cable assemblies shall be in accordance with the specifications of AASHTO-AGC-ARTBA 'A Guide To Standardized Highway Barrier Hardware' Cable Anchor Assembly FCA01. An additional cable assembly 9' in length with a swaged fitting on one (1) end is required for each end anchorage assembly Type CRT.

CABLE ASSEMBLY

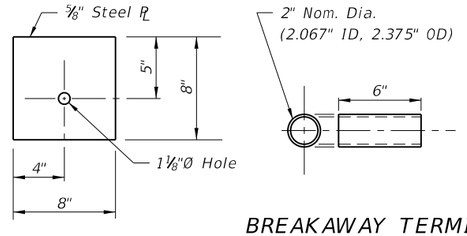

BEARING PLATE

BREAKAWAY TERMINAL POST SLEEVE

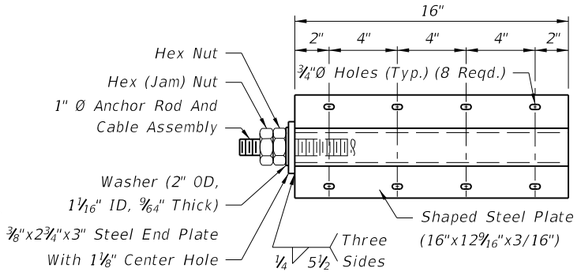

BACK VIEW

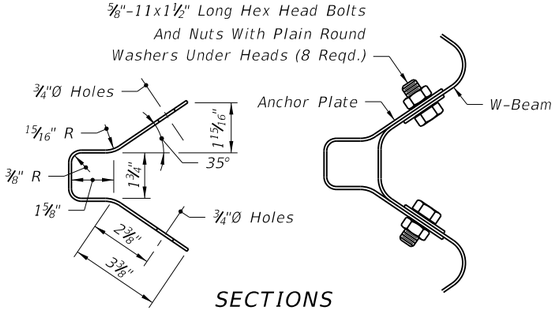

SECTIONS

BEAM ANCHOR PLATE

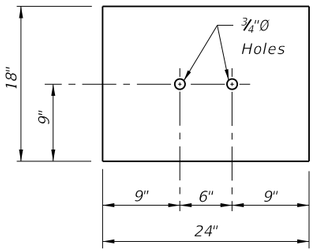

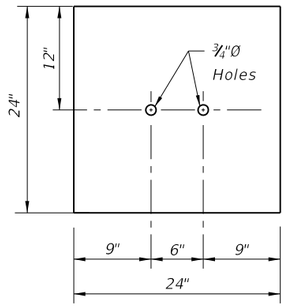

1/4" Steel PL, Galvanized
SOIL PLATES

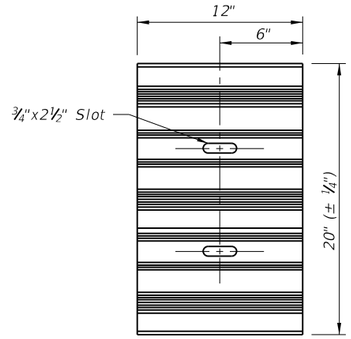

Back-up plate required behind rail elements at intermediate (non-splice) posts when steel offset block used.

THRIE-BEAM BACK-UP PLATE

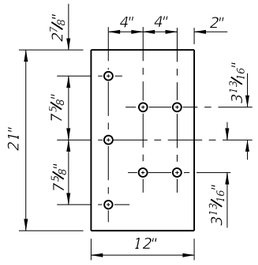

5/8" Plate For Bridge Traffic Railing Barrier
1/4" Plate For Barrier Walls

THRIE-BEAM TERMINAL CONNECTOR

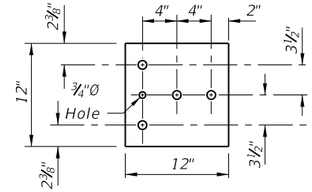

1/4" Plate For All Applications

SPECIAL END SHOE

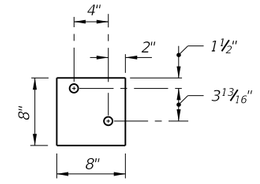

1 1/4" Plate
See Detail J For Application

FILLER PLATE

All Holes 1" Ø Except As Shown

GALVANIZED STEEL BACK-UP PLATES FOR CONNECTING SPECIAL END SHOES AND TERMINAL CONNECTORS TO CONCRETE BRIDGE TRAFFIC RAILING BARRIERS AND CONCRETE BARRIER WALLS

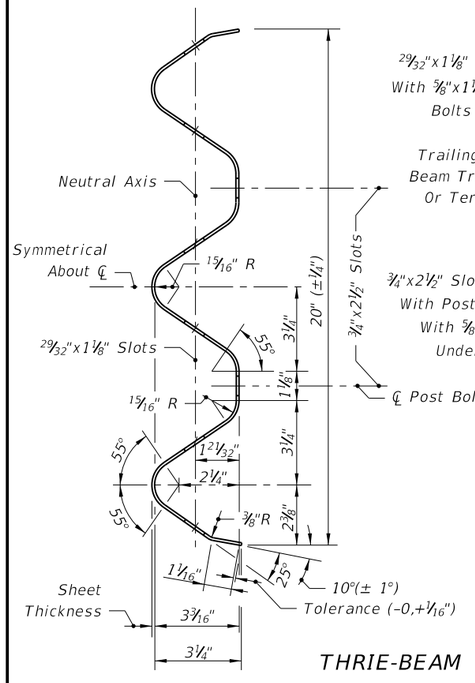

THRIE-BEAM

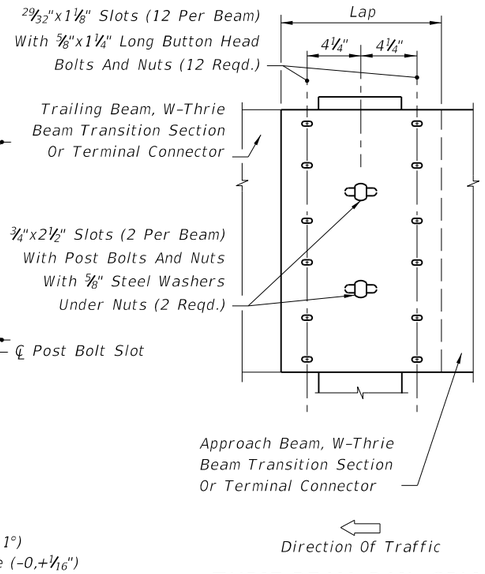

THRIE-BEAM RAIL SPLICE

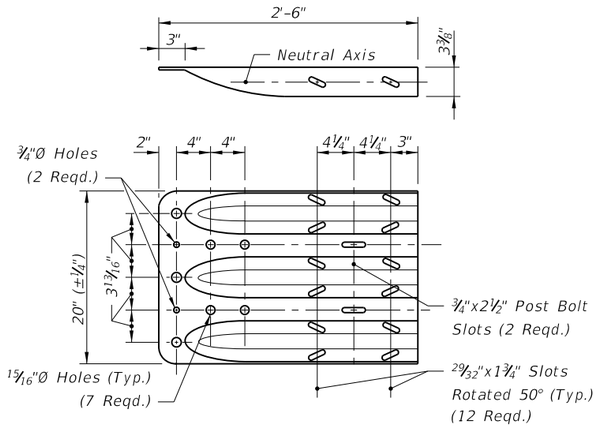

Note: 5/8"Ø steel washer required with splice bolts

THRIE-BEAM TERMINAL CONNECTOR

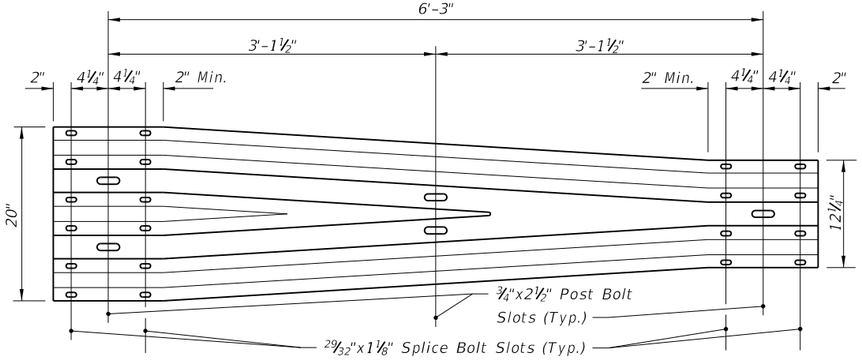

W-THRIE BEAM TRANSITION SECTION

C:\d\projects\standards\roadway\00400-s\00400.dgn
rd960rh
1:57:58 PM
6/28/2012

LAST REVISION	REVISION	DESCRIPTION:			INDEX NO.	SHEET NO.
07/01/05			FDOT DESIGN STANDARDS 2013	GUARDRAIL	400	20

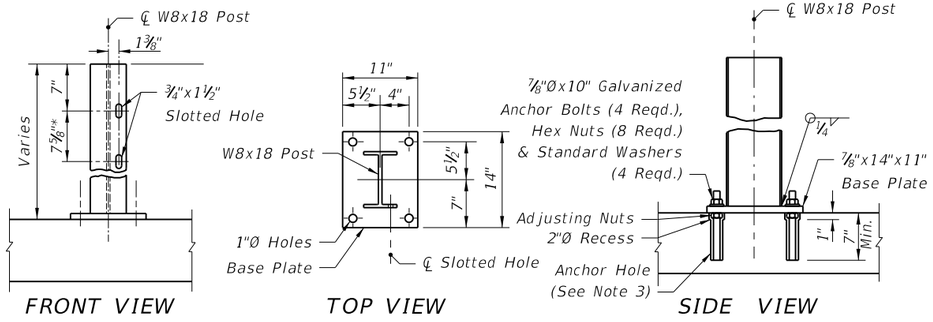

FOR REPLACEMENT OF EXISTING W8x18 GUARDRAIL POSTS ON APPROACH SLABS AND BRIDGES

* Additional slotted hole required when mounting thrie-beam guardrail

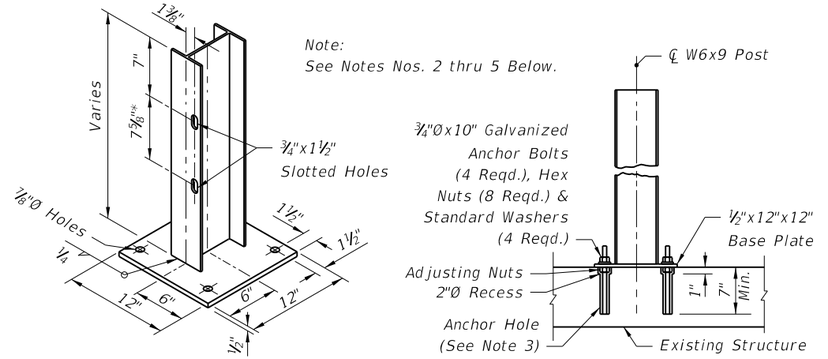

FOR CONSTRUCTION OF GUARDRAIL WHERE CULVERT, PIER FOOTING OR OTHER STRUCTURE PRECLUDES DRIVEN POST INSTALLATION

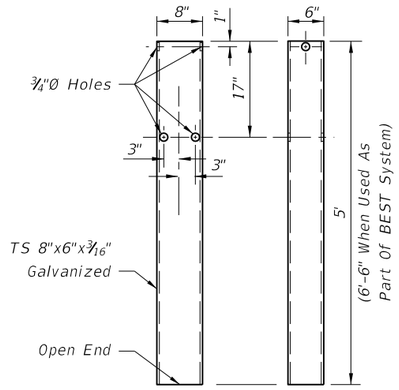

For Use In Combination With Short Timber Breakaway Post

STEEL TUBE

NOTES: (SPECIAL STEEL POST)

1. See Index No. 402 for special steel posts required for construction and repair of guardrail transitions to bridge traffic railing barrier retrofits on existing bridges. See Structures Index Nos. 470 through 476 for steel posts required to construct traffic railing barrier retrofits on existing bridges.

2. Either anchor bolts, concrete wedge anchors or approved Adhesive-Bonded Anchors for Structural Applications may be used. Anchor bolts, wedge anchors and adhesive anchors shall have a minimum tensile strength of 60,000 psi and galvanized in accordance with ASTM A153 (stainless steel components may be substituted but components plated in accordance with ASTM B-633 are not acceptable). Adhesive anchor rods shall be equal in diameter to that detailed for anchor bolts. Wedge anchors are to be installed in accordance with the manufacturer's recommendations, assuming 3,000 psi compressive strength for concrete. Wedge anchors shall also meet the following requirements:

   a. tensile load each anchor: approach slabs 14,000 lbs.; other structures 8,000 lbs.
   b. shear load each anchor: approach slabs 15,000 lbs.; other structures 7,800 lbs.

3. Posts are to be plumbed by adjusting nuts or mortar seating. Posts installed using anchor bolts and adhesive anchors are to be set with adjusting nuts as detailed, unless the Engineer approves the use of mortar seating in lieu of adjusting nuts. Posts installed using wedge anchors are to be set with mortar seating. Base plates shall be grouted with neat finish.

4. Adhesive-Bonded Anchors for Structural Applications shall comply with Section 937 and be installed in accordance with Section 416. Drilled hole diameter shall be in accordance with the manufacturer's instructions.

5. Anchor holes and recesses shall be drilled; wedge anchor holes are to be drilled in accordance with the manufacturer's specifications. Encountered reinforcing steel shall be drilled through. Holes shall be thoroughly cleaned when setting bolts and anchors and dry when setting wedge anchors.

6. Steel post and base units shall be galvanized in accordance with ASTM A123. Any damaged galvanized areas are to be metalized in accordance with Section 562 of the Standard Specifications.

7. Special steel posts are not to be substituted for any post in a guardrail approach end treatment system.

SPECIAL STEEL GUARDRAIL POSTS

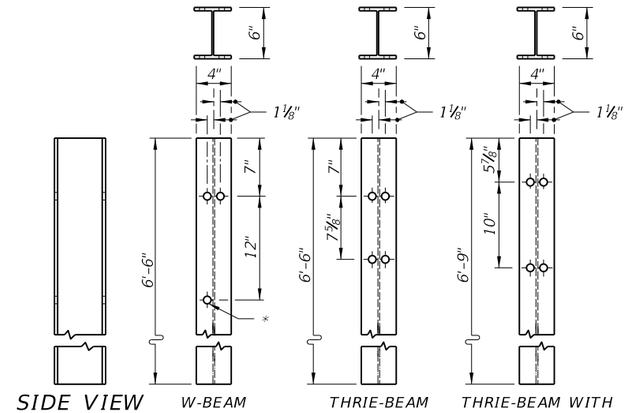

*1 13/16"Ø Hole When Rub Rail Called For

All Holes Shall Be 13/16"Ø Identical Front And Back Flanges

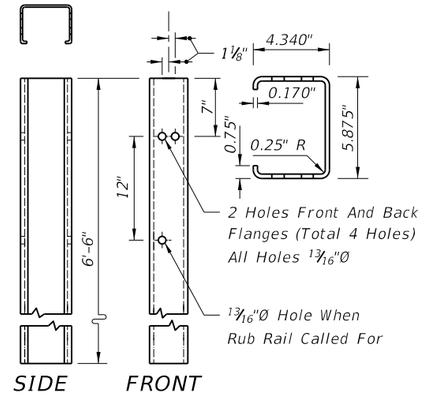

Note: 6"-C steel posts are to face the same direction in any continuous run of guardrail. Posts to be galvanized in accordance with ASTM A123.

6"-C STEEL POST

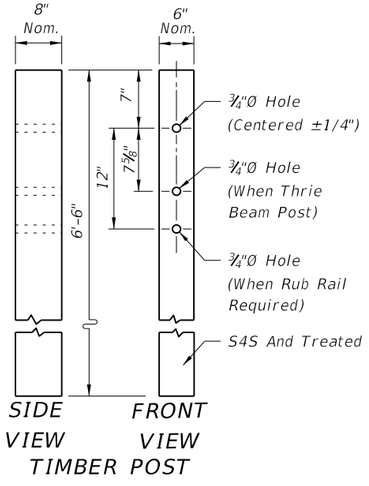

Note:
W6x8.5 or W6x9 steel posts may be either rolled or welded structural shapes conforming to or exceeding the design properties of ASTM A6/A6M. Welding shall be in accordance with the requirements of ASTM A769/A769M. Posts shall be cut to length and the ends seal welded between web and flange before galvanizing. Posts to be galvanized in accordance with ASTM A123.

W6x8.5 OR W6x9 STEEL POST

STANDARD TIMBER AND STEEL GUARDRAIL POSTS

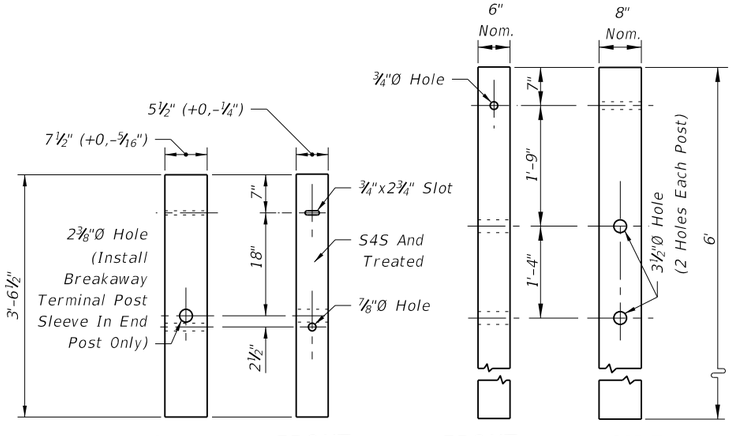

For Use In Combination With Steel Tube

SHORT TIMBER BREAKAWAY POST CRT TIMBER POST

SPECIAL TIMBER GUARDRAIL POSTS

C:\d\projects\standards\roadway\00400-s\00400.dgn rd960rh 1:57:59 PM 6/28/2012

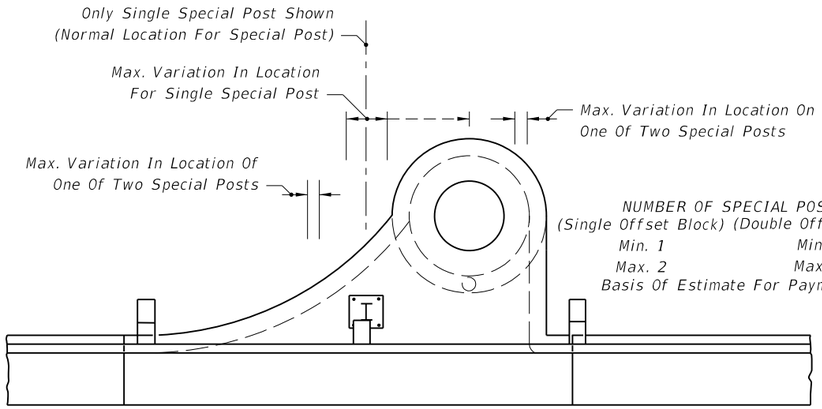

CURB INLET TYPE 1

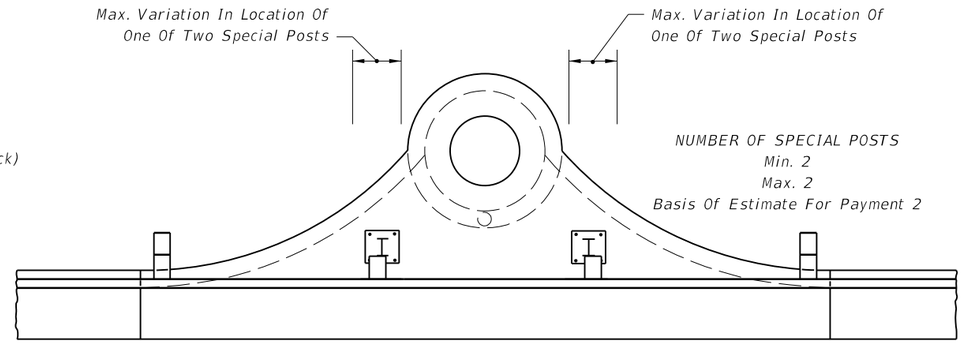

CURB INLET TYPE 2

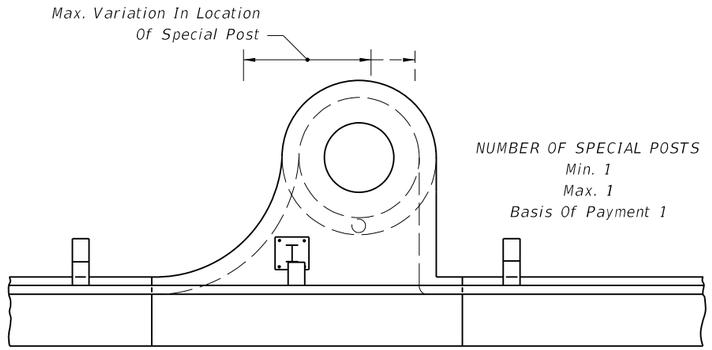

CURB INLET TYPE 3

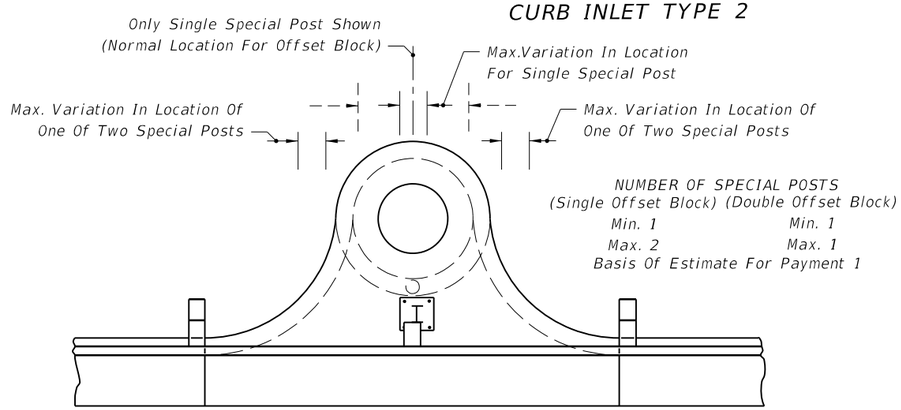

CURB INLET TYPE 4

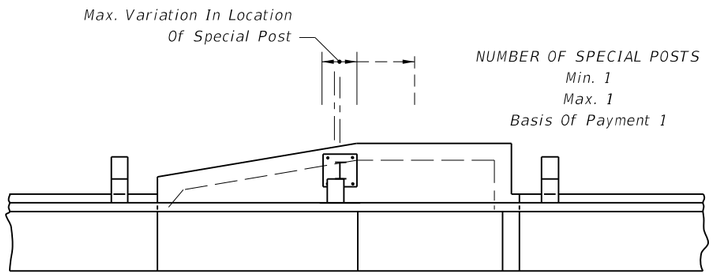

CURB INLET TYPE 5

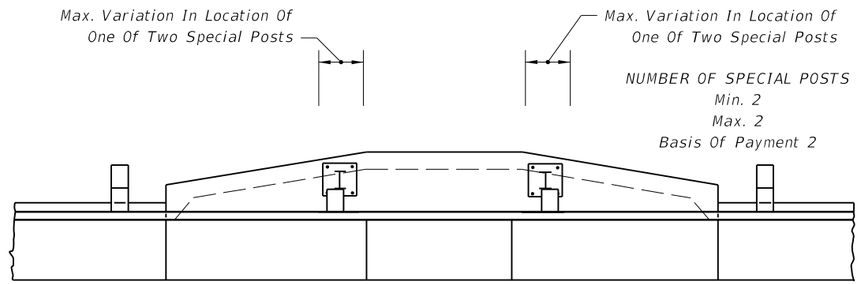

CURB INLET TYPE 6

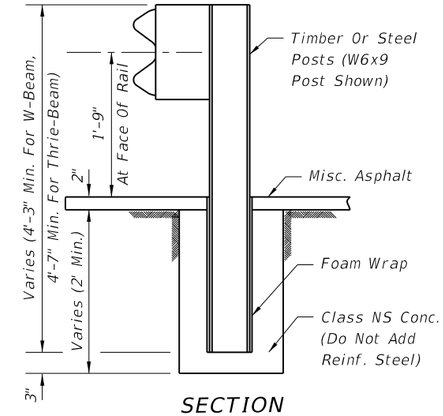

SECTION

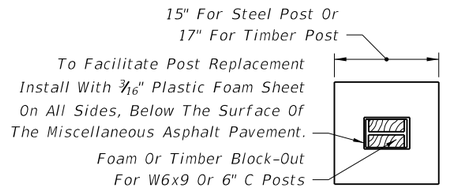

PLAN
(SQUARE OPTION)

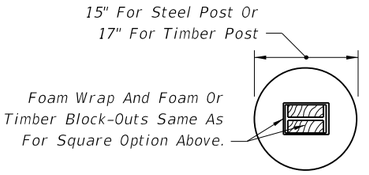

PLAN
(ROUND OPTION)

Note: For line post applications only, i.e., not to be used with breakaway post applications nor be used to modify End Anchorage Assemblies Type II.

TO BE USED PRINCIPALLY OVER SHALLOW UTILITIES

ENCASED GUARDRAIL POST

LEGEND

Variation In Location Of Special Post:

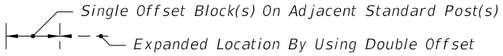

Notes:

1. The locations shown for special posts mounted on inlets are to be used as guidelines for positioning the posts and for estimating the number of required posts.
2. Special posts and their anchorages mounted on curb inlets shall be in accordance with special steel guardrail posts Sheet 21, and paid for under the contract unit price for Special Guardrail Post, EA.
3. Variations shown for the locations of special posts mounted on inlets are established from standard post spacing (6'-3"); clearance of standard posts from inlets (4" min.); use of single and double offset blocks on standard posts adjacent to the inlets; optional flange mountings; and, concrete anchor edge distances (2" for grouted and 3¾" for expansion anchors). The number of posts and their locations may vary by reducing post spacing and adjusting the length of rail panel (s).
4. Encased guardrail posts shall conform in section to standard timber and steel posts, and be paid for under the contract unit price for Special Guardrail Post, EA. Payment shall include cost of foam wrap and concrete encasement.

SPECIAL POST LOCATIONS ON CURB INLETS

C:\d\projects\standards\roadway\00400-s\00400.dgn
rd960rh
1:58:00 PM
6/28/2012

LAST REVISION	REVISION	DESCRIPTION:			INDEX NO.	SHEET NO.
07/01/12			FDOT DESIGN STANDARDS 2013	GUARDRAIL	400	22

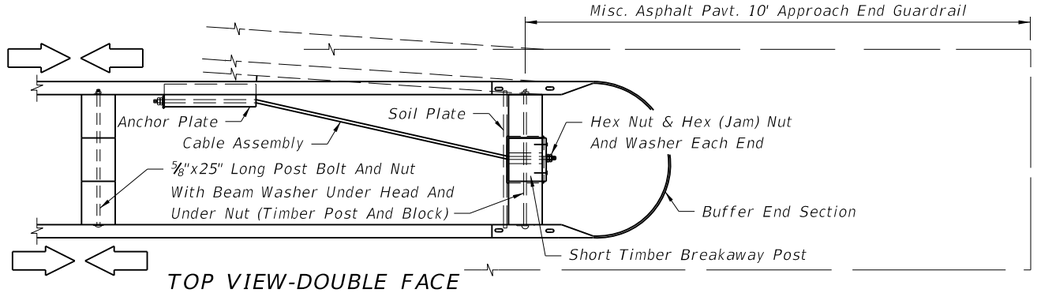

TOP VIEW-DOUBLE FACE

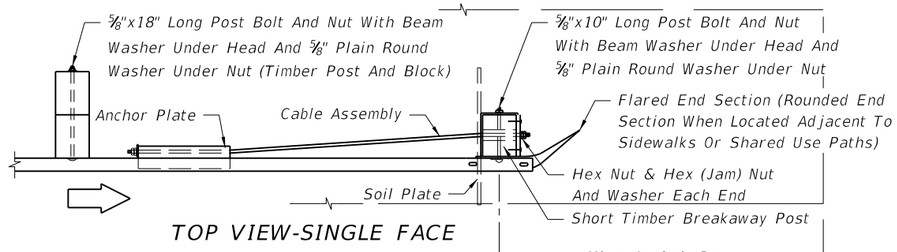

TOP VIEW-SINGLE FACE

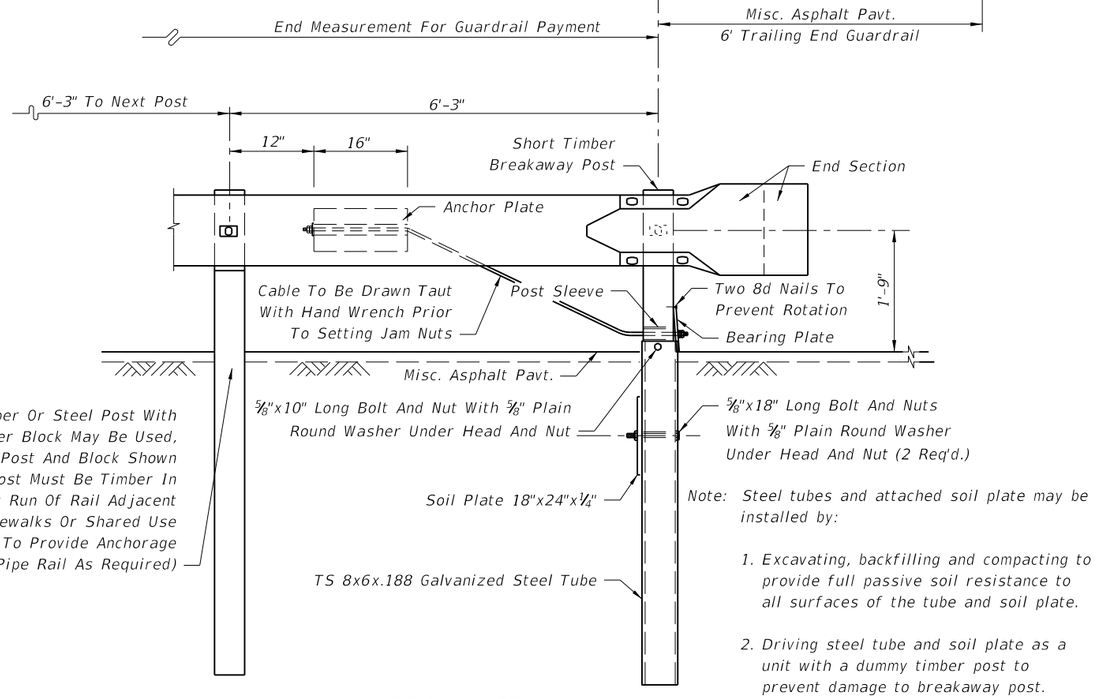

FRONT VIEW

Note: Steel tubes and attached soil plate may be installed by:

1. Excavating, backfilling and compacting to provide full passive soil resistance to all surfaces of the tube and soil plate.
2. Driving steel tube and soil plate as a unit with a dummy timber post to prevent damage to breakaway post.

The payment for the items of End Anchorage Assembly Type II shall be full compensation for furnishing and installing either the Round or the Buffer End Section, the Beam Anchor Plate, Cable Assembly, Pipe Sleeve, Soil Plate, Steel Tube, Bearing Plate, Short Timber Breakaway Post, Offset Blocks and the necessary hardware.

CABLE ANCHOR OPTION

END ANCHORAGE ASSEMBLY TYPE II

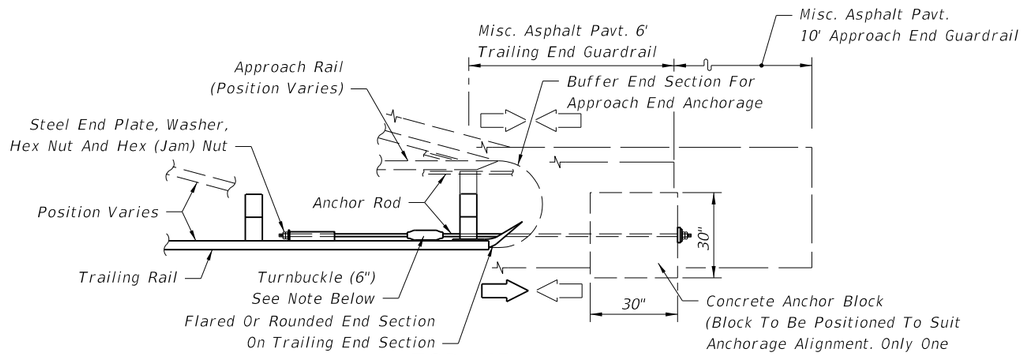

TOP VIEW

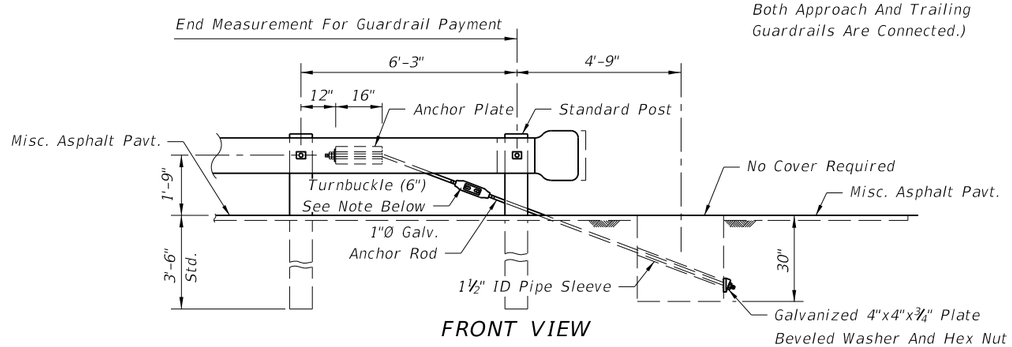

FRONT VIEW

Turnbuckle shall be field cut, threaded 4" on each end, and, metalized in accordance with Sections 562 and 975 of the Standard Specifications. The cost for cutting, threading, metalizing and the turnbuckle shall be included in the contract unit price for Reset Guardrail, LF.

The payment for the items of End Anchorage Assembly Type II shall be full compensation for furnishing and installing the Beam Anchor Plate, Anchor Rod, Pipe Sleeve, Anchor Block, either Flared, Rounded or Buffer End Section, and the necessary hardware.

CONCRETE ANCHOR BLOCK OPTION

TYPE II NOTES

1. Unless specified in the plans, the contractor can supply either the cable anchor option or the concrete anchor block option.

2. Type II end anchorage assemblies are approved for all speeds and are intended for use as:

   a. trailing end anchorages for single face free standing guardrail systems;
   b. approach end anchorages for single face free standing guardrail systems when end anchorage is located outside of the clear zone; and,
   c. both approach and trailing ends of double face guardrail systems.

   Crash cushions shall be constructed at or in lieu of approach Type II end anchorages located inside the clear zone.

   End anchorage for thrie beam guardrail shall be constructed the same as detailed for W-beam, except use thrie beam rail and end section; and the Anchor Plate is to be attached to the bottom corrugation of the thrie beam.

3. These end anchors are to be paid for under the contract unit price for Guardrail, End Anchorage Assembly (Type II), EA as called for in the plans or by permit.

C:\d\projects\standards\roadway\00400-s\00400.dgn
rd960rh
1:58:01 PM
6/28/2012

LAST REVISION	REVISION	DESCRIPTION:			INDEX NO.	SHEET NO.
07/01/12			FDOT DESIGN STANDARDS 2013	GUARDRAIL	400	23

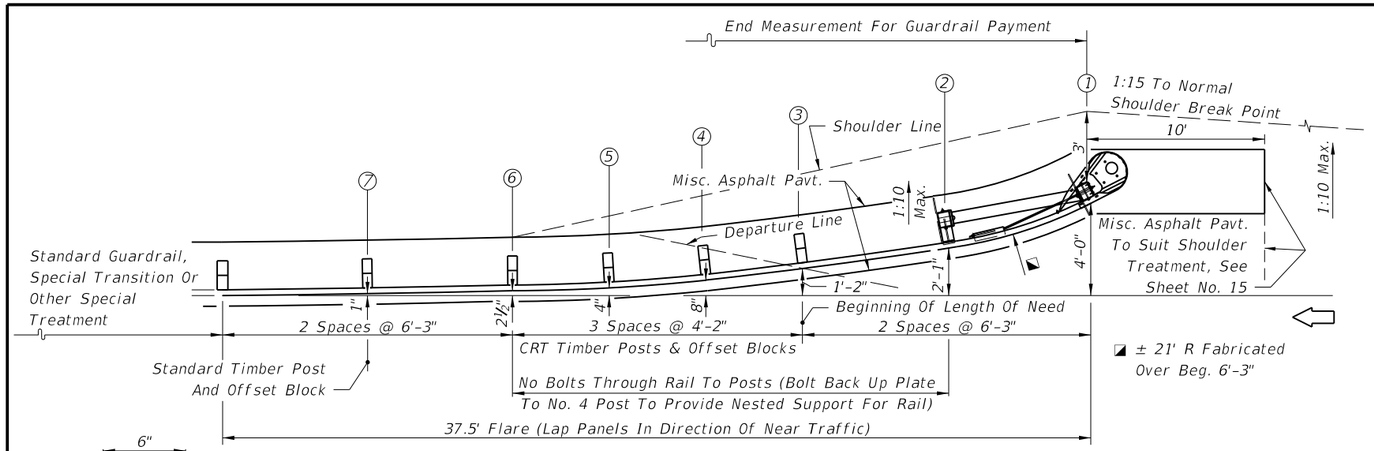

PLAN

MODIFIED ECCENTRIC LOADER TERMINAL (MELT)

MODIFIED ECCENTRIC LOADER TERMINAL NOTES

1. The MELT is applicable for design speeds up to 45 mph. The MELT is intended for use as an approach end guardrail anchorage for shoulder guardrail. Its alignment is a flare from the normal guardrail alignment with an effective length of 37.5' including three standard W-beam panel outside of any standard guardrail, guardrail transitions or other special treatments.
2. This standard drawing is produced by the Florida Department Of Transportation solely for use by the Department and its assignees. This standard drawing provides the general graphics and information necessary to field identify component parts of the MELT and their incorporation into a whole system.
3. This standard drawing is sufficient for plan details for the MELT when installed in connection with shoulder guardrail and precludes the requirement for shop drawing submittals unless the plans otherwise call for such submittals. The MELT shall be assembled in accordance with the distributor's detailed drawings, procedures and specifications.
4. The first two post must be short timber breakaway posts with steel foundation tubes and soil plates, post Nos. 3 thru 6 must be CRT timber posts and post No. 7 must be a standard timber post.
5. The MELT can not be used in medians where horizontal clearance requires the use of a backrail.
6. See the General Notes for galvanizing requirements of metallic components.
7. If the plans call for the MELT at a specific location, substitutions with other end anchorage assemblies will not be permitted unless approved by the Engineer. If the plans call for end anchorage assembly 'flared' at a specific location, the contractor has the option to construct any FDOT approved flared assembly that meet the applications for that location. Where a flared end anchorage is called for in the plans, any approved substitution with a parallel end anchorage will not be eligible for CSIP consideration.
8. The MELT shall be paid for under the contract unit price for Guardrail, End Anchorage Assembly (Flared), EA and shall be full compensation for furnishing and installing all components in accordance with the plans; the distributor's detailed drawings, procedures and specifications and this Index.

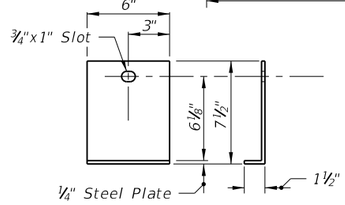

SHELF ANGLE

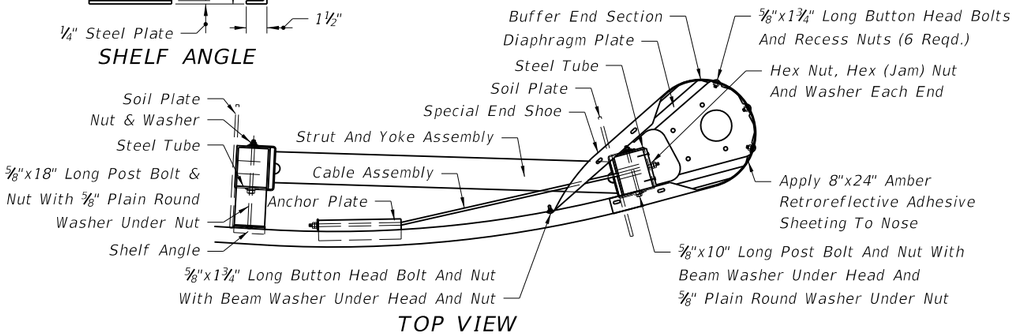

TOP VIEW

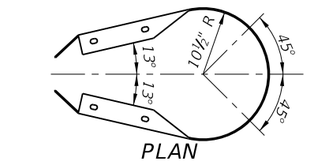

PLAN

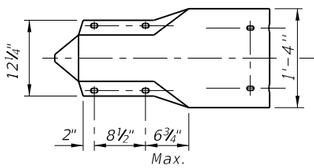

ELEVATION

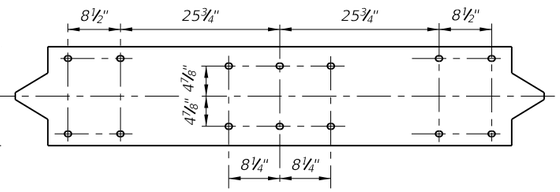

FLAT PLATE LAYOUT

All Slots Shall Be $^{29}/_{32}$"x1⅛"

BUFFERED END SECTION

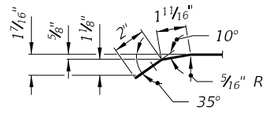

SECTION AA

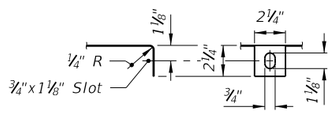

SECTION BB

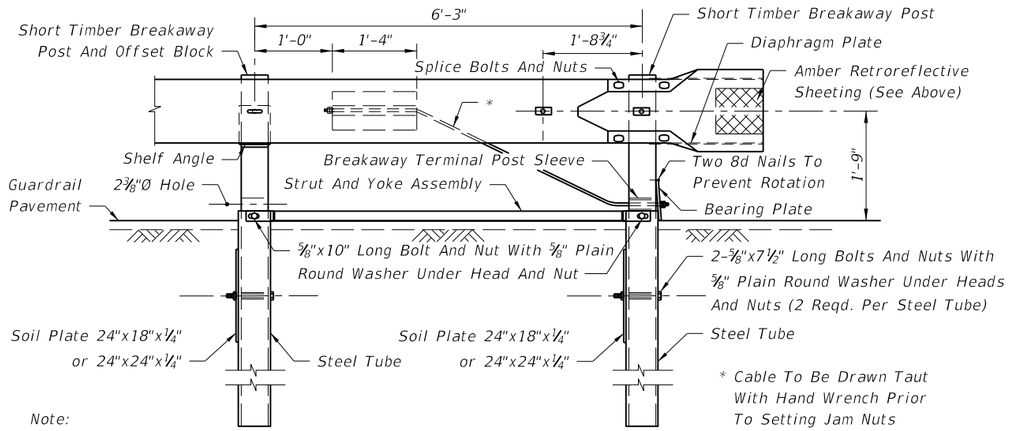

Note:
Steel tubes and attached soil plate may be installed by:
1. Excavating, backfilling and compacting to provide full passive soil resistance to all surfaces of the tube and soil plate.
2. Driving steel tube and soil plate as a unit with a dummy timber post to prevent damage to breakaway post.

FRONT VIEW

END ANCHORAGE ASSEMBLY TYPE MELT

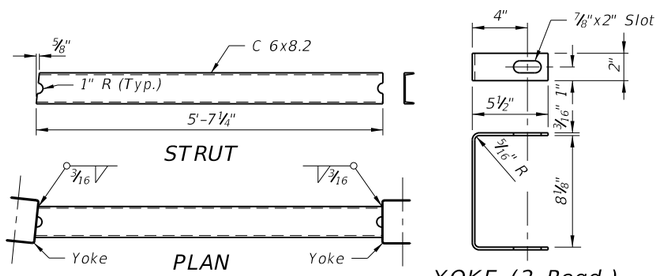

Note: Assembly installed with channel turned down for right side guardrail and turned up for left side guardrail.

STEEL STRUT AND YOKE ASSEMBLY

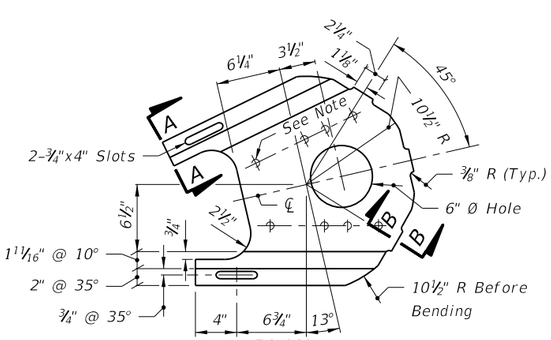

PLAN

Note: Bolt holes are not required, but, diaphragms with either manufacturer produced two or three hole in line patterns are acceptable.

DIAPHRAGM PLATE (2 Reqd.)

LAST REVISION	REVISION	DESCRIPTION:				
02			FDOT DESIGN STANDARDS 2013	GUARDRAIL	INDEX NO. 400	SHEET NO. 24

C:\d\projects\standards\roadway\00400-s\00400.dgn
rd960rh
1:58:01 PM
6/28/2012

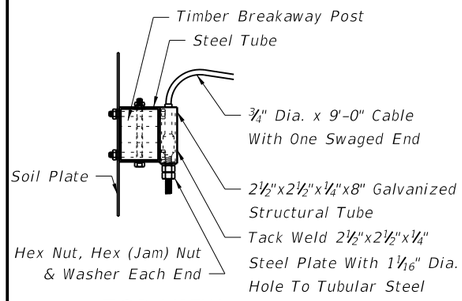

TOP VIEW

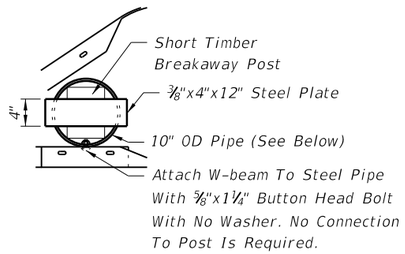

TOP VIEW

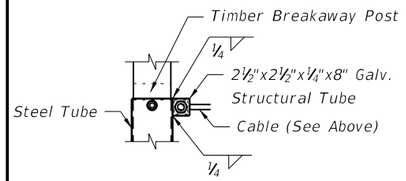

FRONT VIEW
LOWER CABLE ATTACHMENT

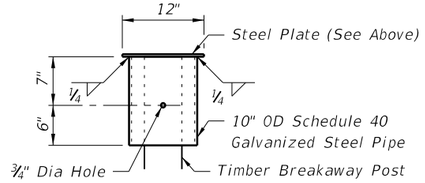

FRONT VIEW
SPECIAL GUARDRAIL PIPE ATTACHMENT

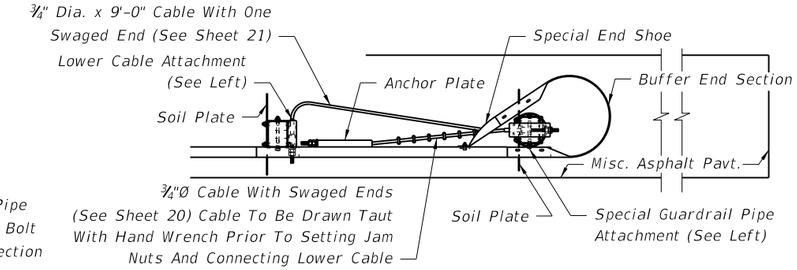

TOP VIEW

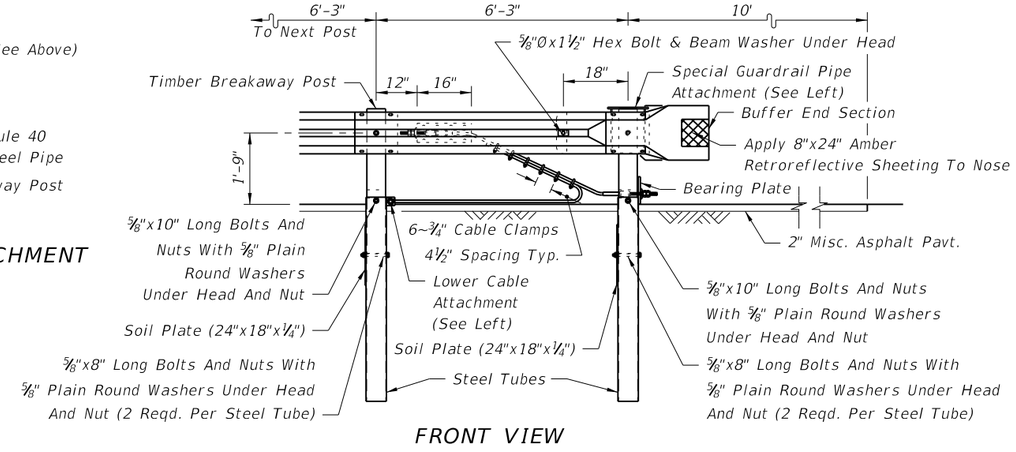

FRONT VIEW

GUARDRAIL END ANCHORAGE ASSEMBLY TYPE CRT

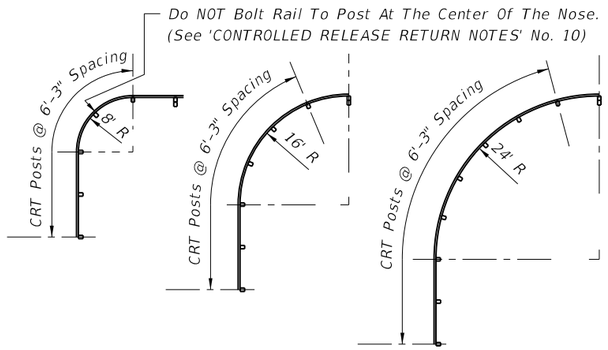

Return Nom. R	Length Of Shop Bent Panels	No. Of CRT Posts	Required Area Free Of Hazards L x W
8'	12.5'	5	25' x 15'
16'	25'	6	30' x 15'
24'	37.5'	8	40' x 20'
32'	50'	11	50' x 20'

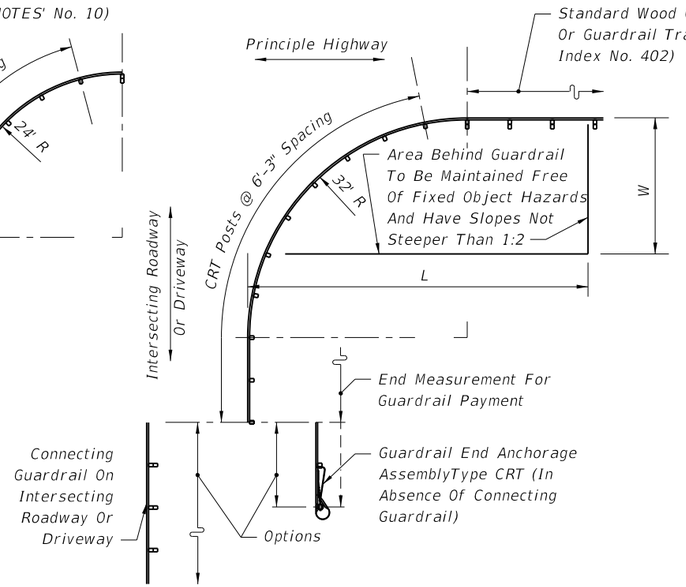

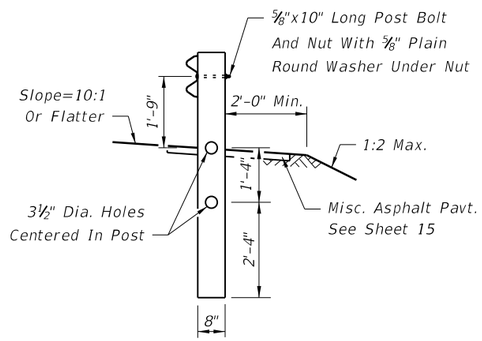

Note: To be constructed when flares and transitions or standard radial returns can not be applied. See Sheet 12.

CRT TIMBER POST

CONTROLLED RELEASE RETURN FOR SIDE ROAD AND DRIVEWAY ACCESS

CONTROLLED RELEASE RETURN NOTES

1. Controlled release returns are intended for use (a) in openings in continuous guardrail for driveway and side road access when flares and transitions or standard radial returns can not be applied (Sheet 12); and, (b) for shielding the ends of bridge traffic rails and barrier walls where the driveway and side road access is in close proximity to the structure and space does not permit the proper use of approved flared and parallel types of Guardrail End Anchorage Assemblies.
2. Controlled release returns are not intended as a substitute or replacement for the appropriate use of approved vehicle impact attenuators.
3. Controlled release returns with either 8', 16' or 24' radii are designed for highway speeds of 60 mph or less.
4. The controlled release returns shown are designed as full returns based on an intersection angle of 90°. The return can be terminated with the Guardrail End Anchorage Assembly Type CRT or connected to standard guardrail as shown or as otherwise detailed in the plans.
5. The Guardrail End Anchorage Assembly Type CRT is to be used only for the controlled release returns with 8', 16', 24' and 32' radii as shown; the assembly is not to be used in any tangent rail or flared rail applications. Other types of end anchorage assemblies are not to be used in the controlled release returns.
6. The area immediately behind the control release return shall have slopes not steeper than 1:2 and be maintained free of fixed objects in accordance with the area limits tabulated in the plan below.
7. The surface approaching the controlled release return shall have a transverse slope not exceeding 1:10. The effective width of the transverse surface is to be based on standard vehicle departure, return radii and preceding shielding; the width (beyond shoulder) shall be not greater than the corresponding 15' and 20', 'W' values tabulated below.
8. The curved guardrail portion of the controlled release return shall be full section shop bent panels (12.5' or 25' panels).
9. Washers are not to be used between the guardrail beam and the head of the button head post bolts at any controlled release terminal (CRT) post or at any Guardrail End Anchorage Assembly Type CRT breakaway timber post.
10. The guardrail beam of the 8' radius return is not bolted to the center control release post.
11. See the General Notes for galvanizing requirements of metallic components.
12. Controlled release return systems shall be paid for under the contract unit prices for Guardrail (Roadway), LF, Guardrail (Shop-bent Panels), LF, and Guardrail, End Anchorage Assembly (Type CRT), EA as called for in the plans or by permit and shall be full compensation for furnishing and installing all components in accordance with the plans and with this index. CRT posts are included in the cost for guardrail.

C:\d\projects\standards\roadway\00400-s\00400.dgn rd960rh 1:58:02 PM 6/28/2012

LAST REVISION	REVISION	DESCRIPTION:				
04			FDOT DESIGN STANDARDS 2013	GUARDRAIL	INDEX NO. 400	SHEET NO. 25

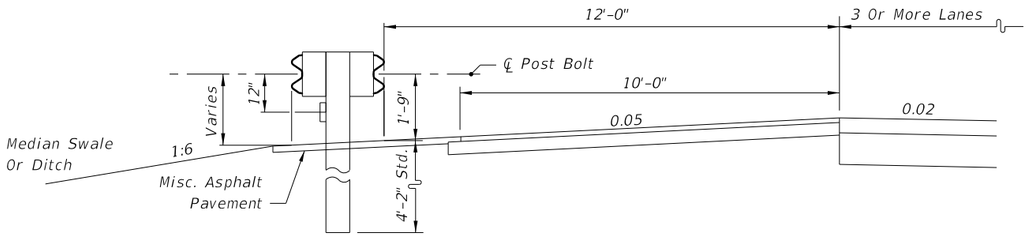

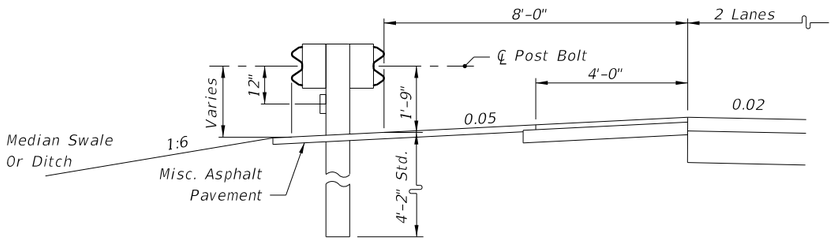

Notes:

1. Typical placement shown. May be constructed at other locations as called for in the plans.

2. Rub Rail is required on the median side or ditch side of the barrier.

MOUNTING HEIGHT FOR DOUBLE FACED GUARDRAIL ON MEDIAN SHOULDERS (FREEWAYS)

LATERAL PLACEMENT ON SLOPES (FROM EDGE OF NEAR TRAFFIC LANE)[1]

Slope	Standard Guardrail[2]	Guardrail Not Recommended	Guardrail With Rub Rail[3]
1:4	to 13'	14' to 27'	28' to 45'
1:5	to 14'	15' to 25'	26' to 45'
1:6	to 16'	17' to 22'	23' to 45'
1:7	to 20'	21' to 24'	25' to 45'
1:8	to 25'		26' to 45'
1:9	to 26'		27' to 45'
1:10	to 27'		28' to 45'

Notes:

1. For shoulders less than 12' in width the tabulated values will be reduced by the difference between 12' and the shoulder width. Placement of guardrail on front slopes steeper than 1:4 not recommended.

2. Standard guardrail; 1'-9" to ℄ post bolt. Rub Rail is required on the median side when double face guardrail is used.

3. Guardrail with Rub Rail; 2'-0" to ℄ post bolt.

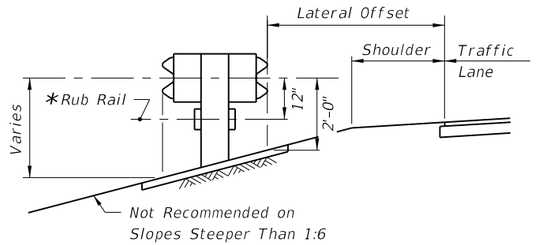

GUARDRAIL ON MEDIAN SLOPES

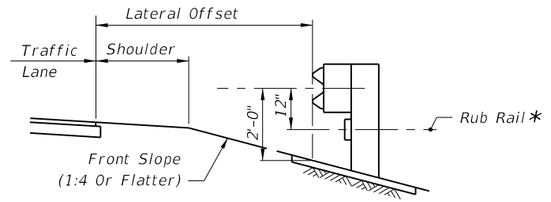

GUARDRAIL ON OUTSIDE SLOPES

∗ C6x8.2, Plates And Fasteners or Bent Plate And Fasteners In Accordance With Standards RLR01 And RER01 Of AASHTO-AGC-ARTBA "A Guide To Standardized Highway Barrier Hardware"

GUARDRAIL ON SLOPES

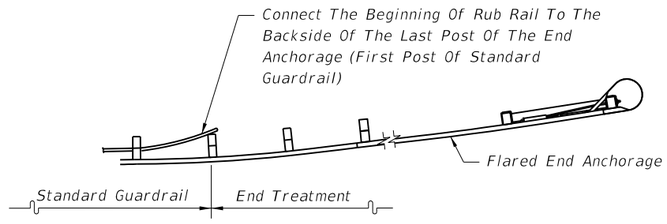

RUB RAIL TERMINATION

6/28/2012 1:58:03 PM rd960rh C:\d\projects\standards\roadway\00400-s\00400.dgn

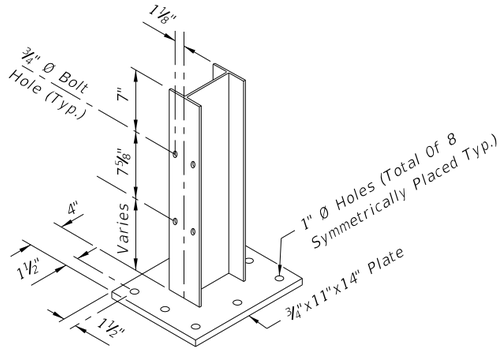

PICTORIAL

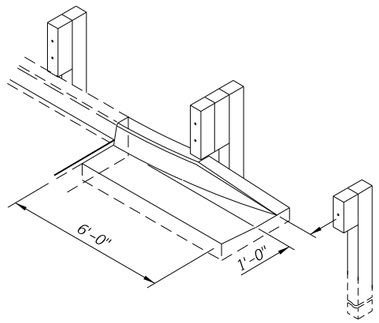

CURB TYPE F FLARE WHEN END OF EXISTING APPROACH SLAB CURB EXPOSED

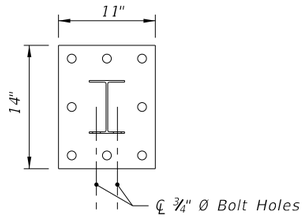

TOP VIEW

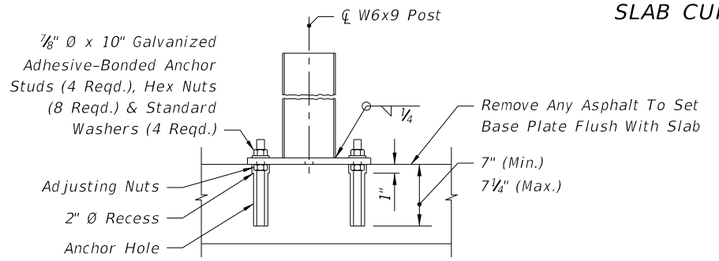

SIDE VIEW

SPECIAL STEEL POST FOR ROADWAY THRIE-BEAM TRANSITIONS TO BRIDGE TRAFFIC RAILING RETROFITS

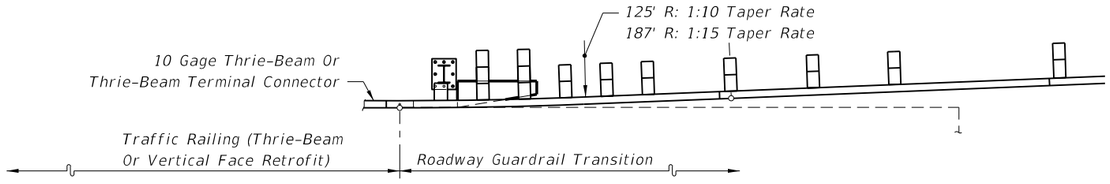

APPROACH SLAB WITHOUT CURB

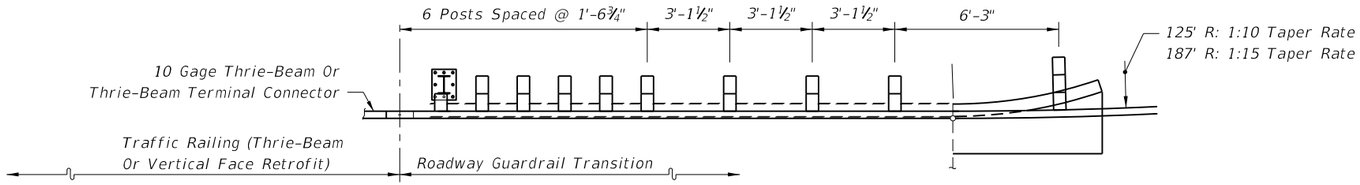

APPROACH SLAB WITH CURB

Longitudinal Location Of Transition Blocks And Curb End Flares Will Vary With Scheme Type

PARTIAL PLAN VIEWS

GENERAL NOTES

1. This index provides thrie-beam transition and connection details for approach end guardrail on existing bridges, and anchorage details for trailing end traffic railing retrofits and safety shapes on existing bridges. Sheets 1 through 23 apply to bridges with retrofitted traffic railings, (Sheet 23 shows the trailing end guardrail connections). Sheet 24 applies to bridges with safety shaped traffic railing.

2. The schemes identified by Arabic numerals in this index are complementary to the bridge traffic railing barrier retrofit schemes with like numeral identification in Index Nos. 470, 471 through 476, 480 through 483. The schemes in this index identified by Roman numerals are complementary to bridge safety shaped traffic railing barrier where determined to be in accordance with applications of criteria specified in the Structures Manual.

3. For guardrail applications and details of related hardware and accessories that are not provided on this index, refer to Index No. 400.

NOTES FOR GUARDRAIL TRANSITIONS CONNECTING TO TRAFFIC RAILING RETROFITS ON EXISTING BRIDGES

1. The transition detail shown on this sheet shows (a) the standard post spacings within the typical thrie-beam approach transitions connecting to existing bridges with retrofit traffic railings, and (b) depict the typical alignments of the approach transitions.

2. The curb and gutter flare shown on this sheet is typical of flares that are to be constructed when approach slab curbs extend to the beginning of the slab, and where other treatment to curb blunt ends are not in place.

3. The special steel post for roadway thrie-beam transitions detailed on this sheet is specific to all transition applications on this index that require one or more steel posts.

   The special steel post and base plate assembly shall be fabricated using ASTM A36 or ASTM A709 Grade 36 steel. Welding shall conform to ANSI/AASHTO/AWS D1.5. The assembly shall be hot-dip zinc coated in accordance with Section 536 of the Specifications.

   Anchor studs shall be fully threaded rods in accordance with ASTM F1554 Grade 36 or ASTM A193 Grade B7. All nuts shall be heavy hex in accordance with ASTM A563 or ASTM A19

4. Anchor studs and nuts shall be hot-dip zinc coated in accordance with the Specifications. After the nuts have been snug tightened, the anchor stud threads shall be single punch distorted immediately above the top nuts to prevent loosening of the nuts. Distorted threads shall be coated with a galvanizing compound in accordance with the Specifications.

   Adhesive bonding material systems for anchors shall comply with Specification Section 937 and be installed in accordance with Specification Section 416.4. Nested beam extensions and points for terminal connector attachments will vary for traffic railing barrier vertical face retrofits. The plan views for the vertical face retrofit barriers show the primary configurations for each particular scheme. The associated pictorial views show the variations.

5. For installing thrie-beam terminal connector to traffic railing vertical face retrofits, see notations on Sheets 12 through 15 and the flag notation on Sheet 23.

6. Payment for connections to traffic railing vertical face retrofits are to be made under the contract unit price for Bridge Anchorage Assembly, EA., and shall be full compensation for bolt hole construction, terminal connector, terminal connector plate and bolts, nuts and washers.

DESIGN NOTES FOR GUARDRAIL TRANSITIONS CONNECTING TO TRAFFIC RAILING RETROFITS ON EXISTING BRIDGES

1. For selection of an appropriate transition scheme, see the Structures Manual for instructions to the Structures and Roadway engineers.

GUARDRAIL TRANSITION ALIGNMENTS FOR BRIDGE THRIE-BEAM AND VERTICAL FACE TRAFFIC RAILING RETROFIT

C:\d*projects\standards\roadway\00400-s\00402-01.dgn rd960rh 1:58:06 PM 6/28/2012

LAST REVISION	REVISION	DESCRIPTION:				
07/01/07			FDOT DESIGN STANDARDS 2013	GUARDRAIL TRANSITIONS AND CONNECTIONS FOR EXISTING BRIDGES	INDEX NO. 402	SHEET NO. 1

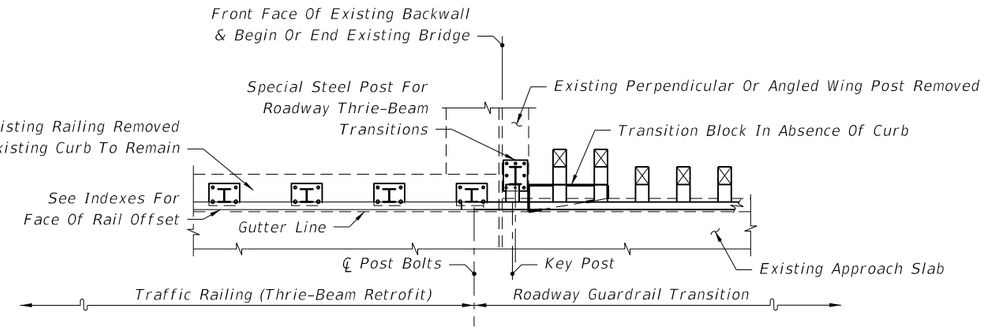

SEE INDEX NO. 471 - SCHEME 1

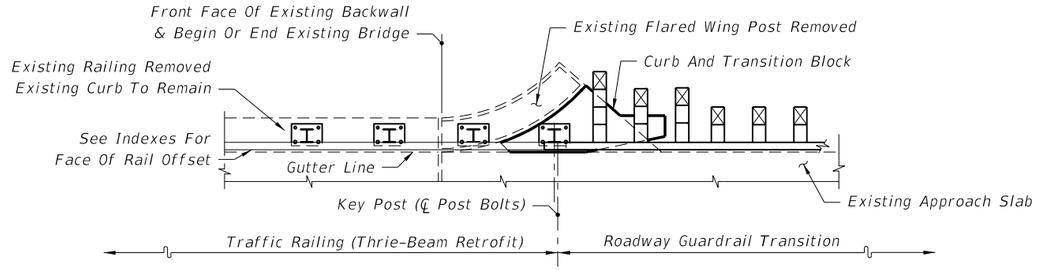

SEE INDEX NO. 471 - SCHEME 3

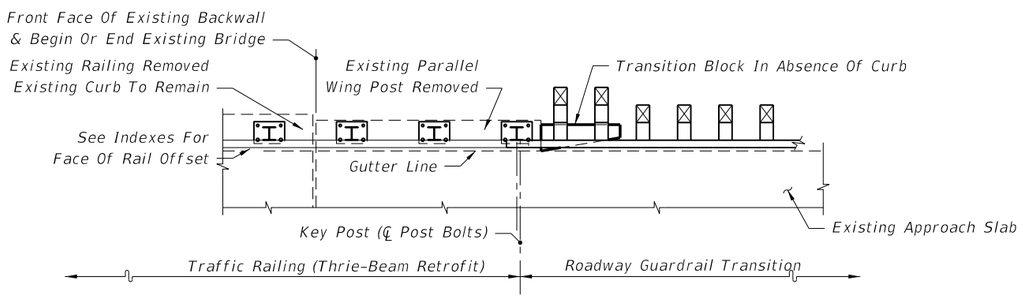

SEE INDEX NO. 471 - SCHEME 2

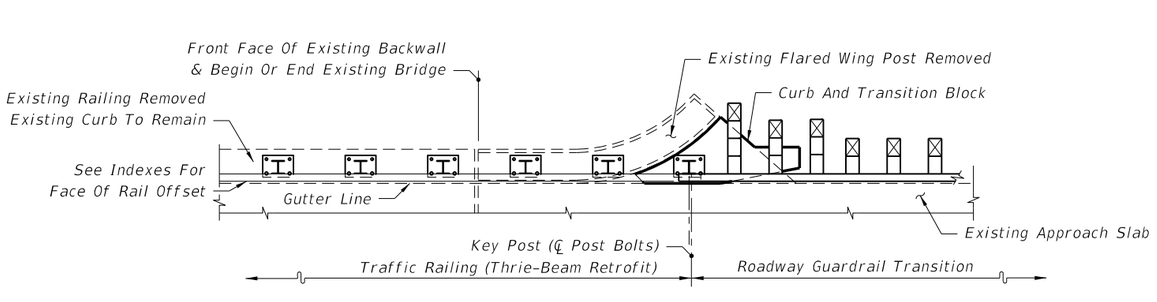

SEE INDEX NO. 471 - SCHEME 3

PARTIAL PLAN VIEWS OF GUARDRAIL APPROACH TRANSITIONS AND CONNECTIONS FOR BRIDGE TRAFFIC RAILING (THRIE-BEAM RETROFIT)

C:\d\projects\standards\roadway\00400-s\00402-02.dgn
rd960rh
1:58:08 PM
6/28/2012

LAST REVISION	REVISION	DESCRIPTION:		FDOT DESIGN STANDARDS 2013	GUARDRAIL TRANSITIONS AND CONNECTIONS FOR EXISTING BRIDGES	INDEX NO.	SHEET NO.
07/01/07						402	2

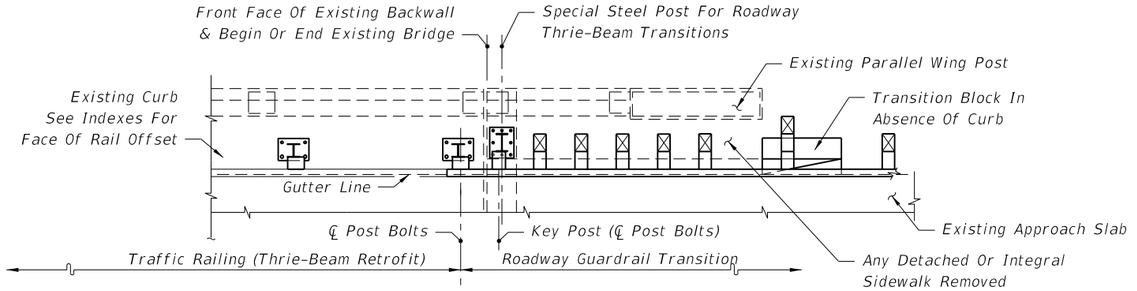

SEE INDEX NOS. 472 & 475 - SCHEME 2

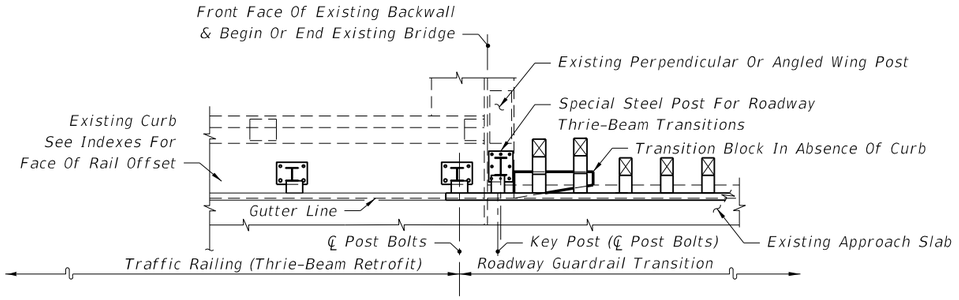

SEE INDEX NOS. 472 & 475 - SCHEME 1

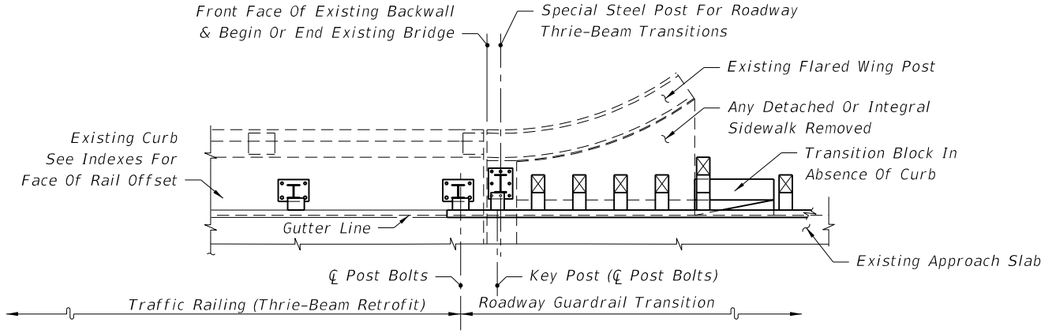

SEE INDEX NOS. 472 & 475 - SCHEME 2

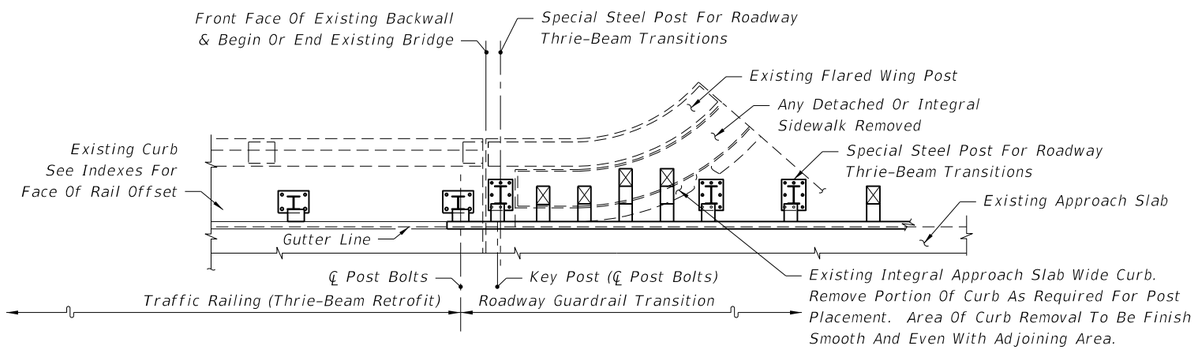

SEE INDEX NOS. 472 & 475 - SCHEME 2

PARTIAL PLAN VIEWS OF GUARDRAIL APPROACH TRANSITIONS AND CONNECTIONS FOR BRIDGE TRAFFIC RAILING (THRIE-BEAM RETROFIT)

6/28/2012 1:58:10 PM rd960rh C:\d\projects\standards\roadway\00400-s\00402-03.dgn

LAST REVISION	REVISION	DESCRIPTION:		FDOT DESIGN STANDARDS 2013	GUARDRAIL TRANSITIONS AND CONNECTIONS FOR EXISTING BRIDGES	INDEX NO.	SHEET NO.
07/01/07						402	3

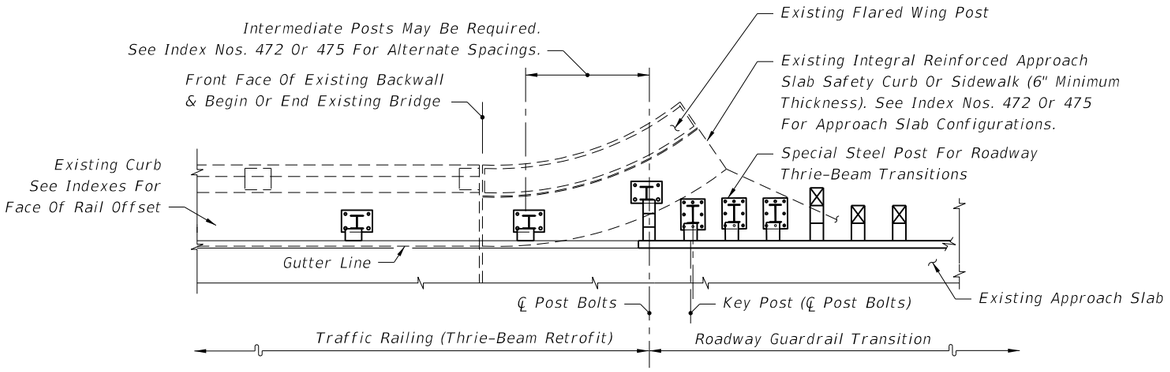

SEE INDEX NOS. 472 & 475 - SCHEMES 3 & 4

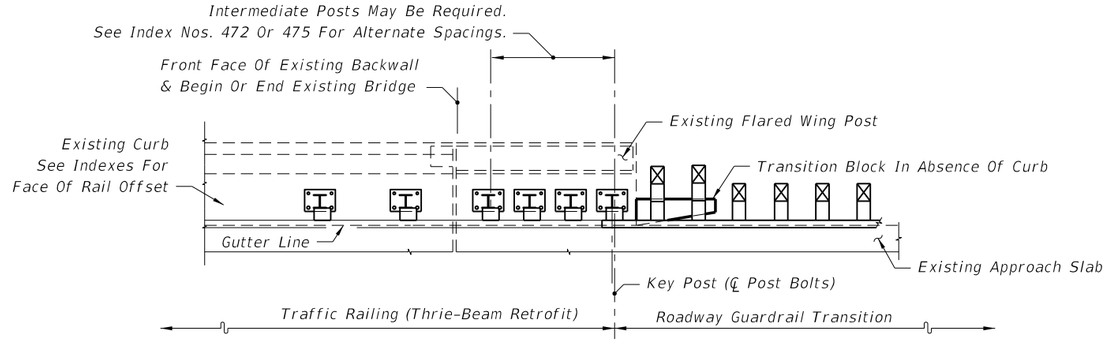

SEE INDEX NOS. 472 & 475 - SCHEMES 5 & 6

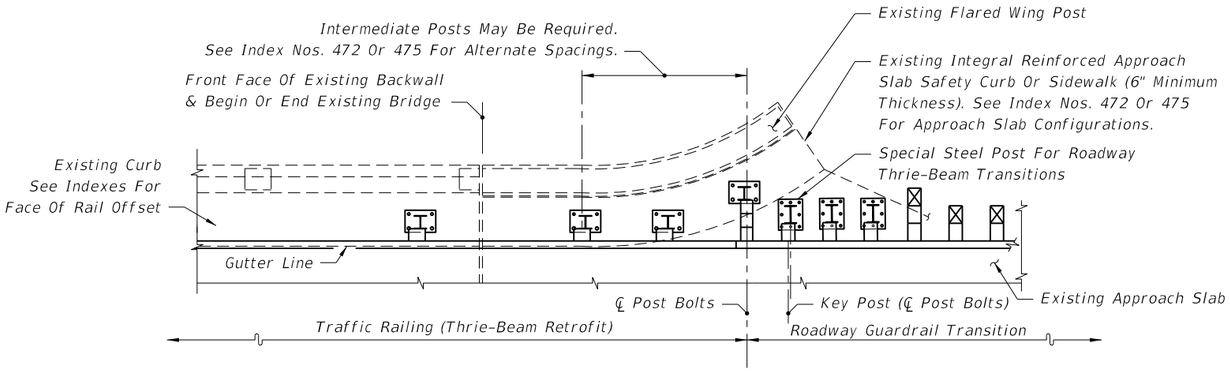

SEE INDEX NOS. 472 & 475 - SCHEMES 3 & 4

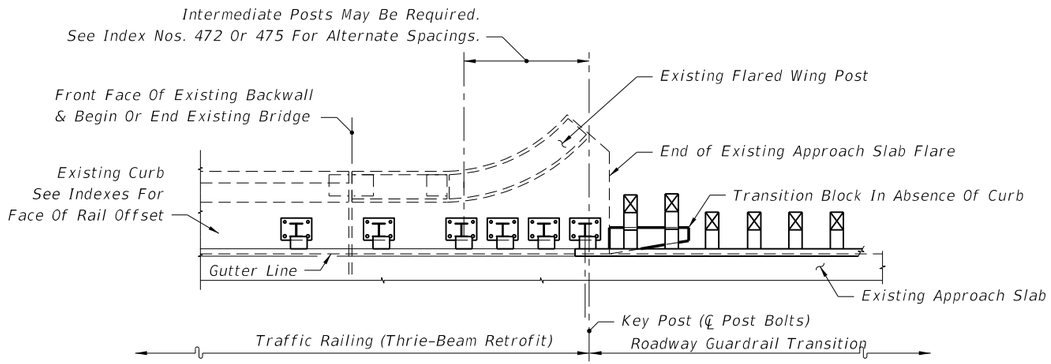

SEE INDEX NOS. 472 & 475 - SCHEMES 5 & 6

PARTIAL PLAN VIEWS OF GUARDRAIL APPROACH TRANSITIONS AND CONNECTIONS FOR BRIDGE TRAFFIC RAILING (THRIE-BEAM RETROFIT)

C:\d\projects\standards\roadway\00400-s\00402-04.dgn
rd960rh
1:58:12 PM
6/28/2012

LAST REVISION	REVISION	DESCRIPTION:		FDOT DESIGN STANDARDS 2013	GUARDRAIL TRANSITIONS AND CONNECTIONS FOR EXISTING BRIDGES	INDEX NO.	SHEET NO.
07/01/07						402	4

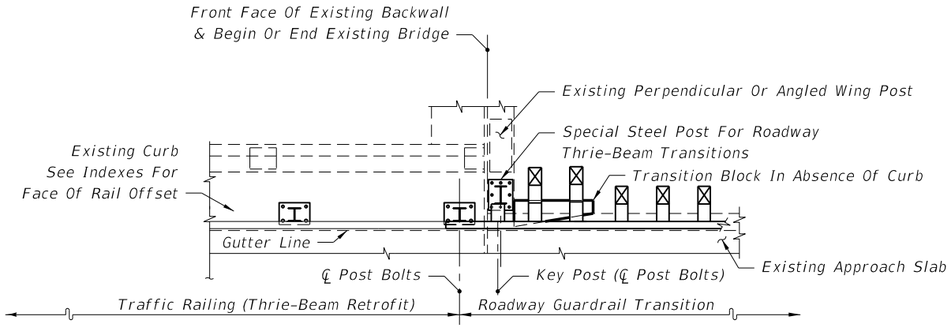

SEE INDEX NOS. 473 & 476 - SCHEME 1

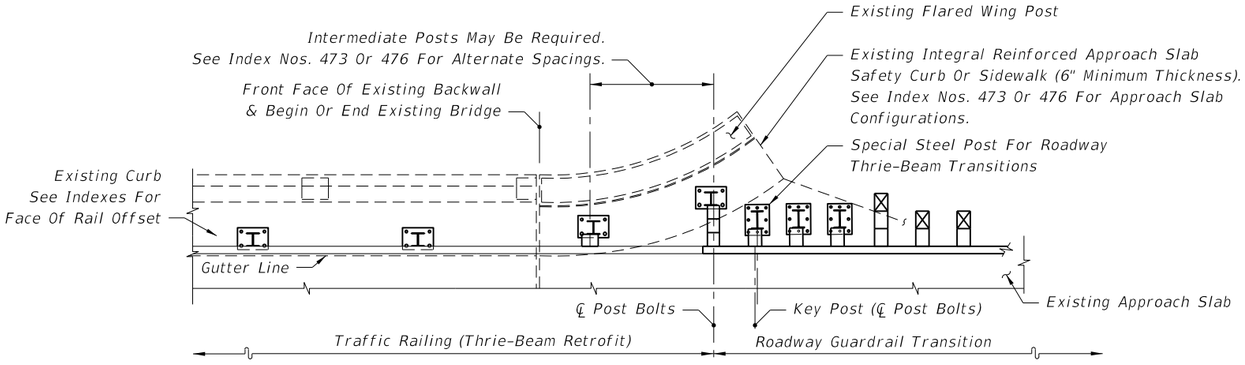

SEE INDEX NOS. 473 & 476 - SCHEMES 3 & 4

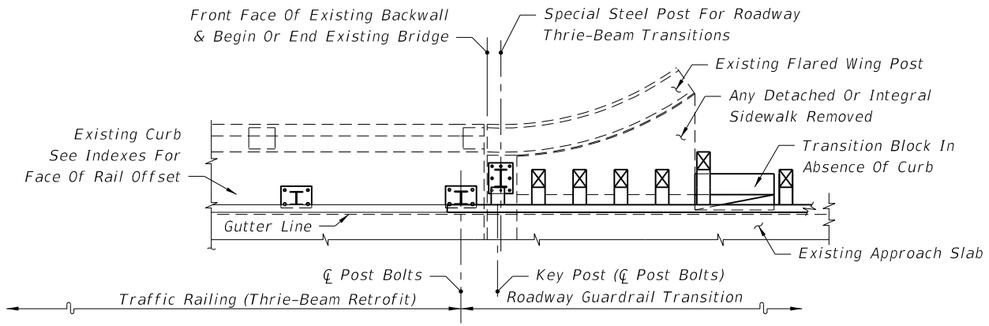

SEE INDEX NOS. 473 & 476 - SCHEME 2

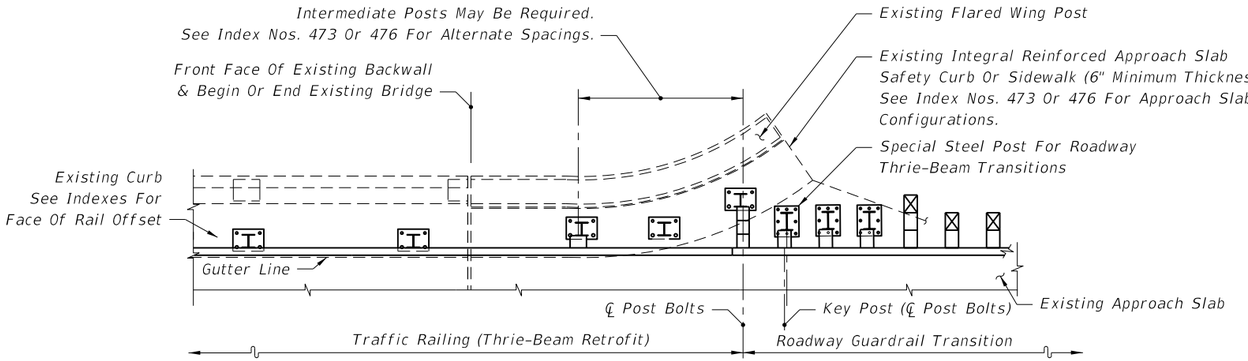

SEE INDEX NOS. 473 & 476 - SCHEMES 3 & 4

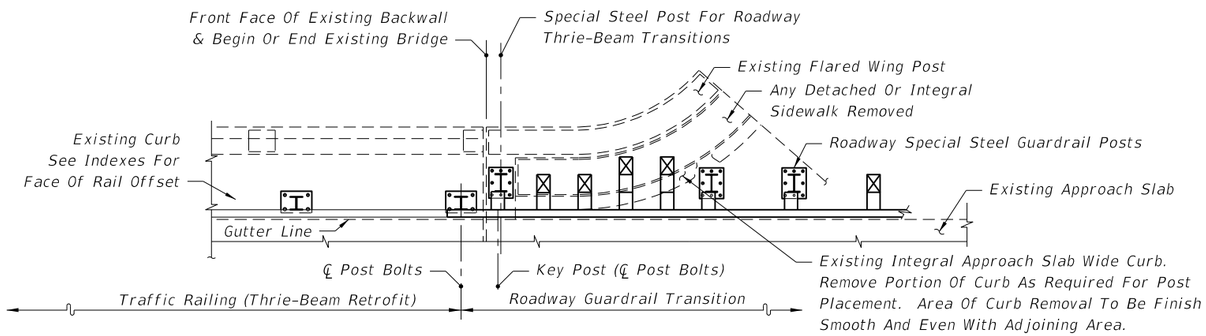

SEE INDEX NOS. 473 & 476 - SCHEME 2

PARTIAL PLAN VIEWS OF GUARDRAIL APPROACH TRANSITIONS AND CONNECTIONS FOR BRIDGE TRAFFIC RAILING (THRIE-BEAM RETROFIT)

C:\d\projects\standards\roadway\00400-s\00402-05.dgn
rd960rh
1:58:14 PM
6/28/2012

LAST REVISION	REVISION	DESCRIPTION:				
07/01/07			FDOT DESIGN STANDARDS 2013	GUARDRAIL TRANSITIONS AND CONNECTIONS FOR EXISTING BRIDGES	INDEX NO. 402	SHEET NO. 5

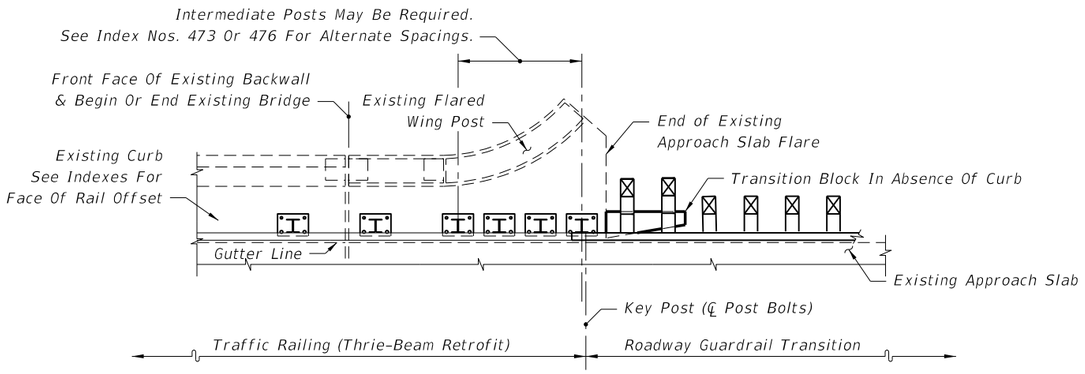

SEE INDEX NOS. 473 & 476 - SCHEMES 5 & 6

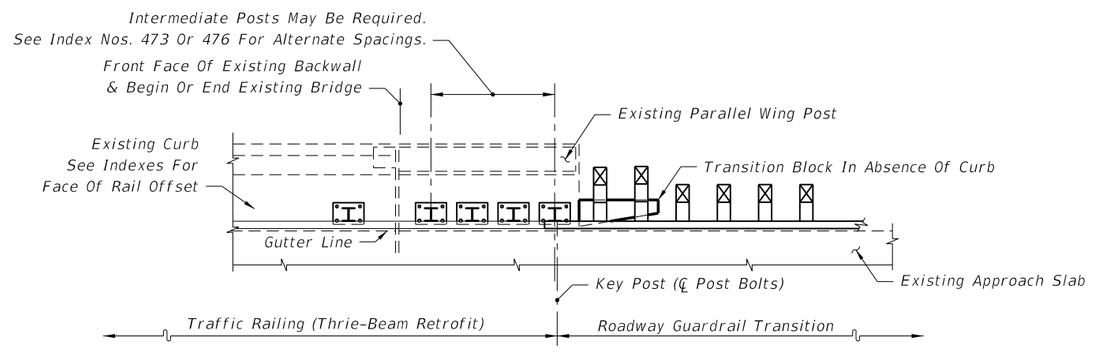

SEE INDEX NOS. 473 & 476 - SCHEMES 5 & 6

PARTIAL PLAN VIEWS OF GUARDRAIL APPROACH TRANSITIONS AND CONNECTIONS FOR BRIDGE TRAFFIC RAILING (THRIE-BEAM RETROFIT)

6/28/2012 1:58:17 PM rd960rh C:\d\projects\standards\roadway\00400-s\00402-06.dgn

LAST REVISION	REVISION	DESCRIPTION:		FDOT DESIGN STANDARDS 2013	GUARDRAIL TRANSITIONS AND CONNECTIONS FOR EXISTING BRIDGES	INDEX NO.	SHEET NO.
07/01/07						402	6

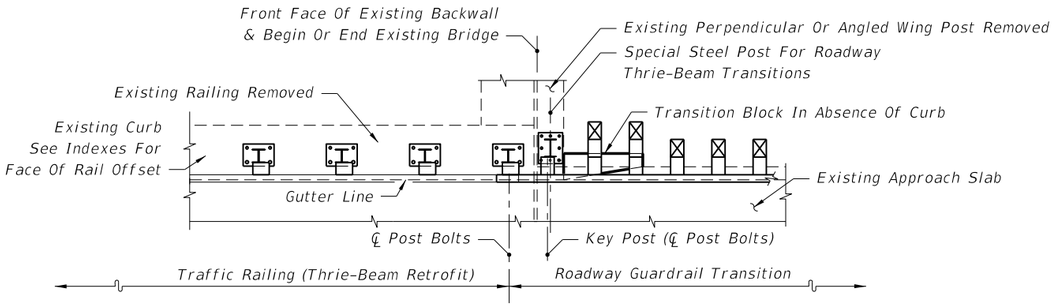

SEE INDEX NO. 474 - SCHEME 1

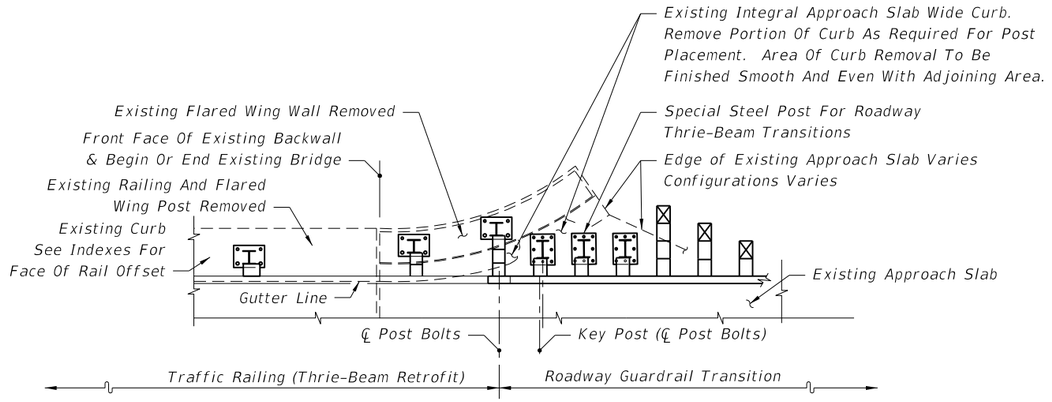

SEE INDEX NO. 474 - SCHEME 3

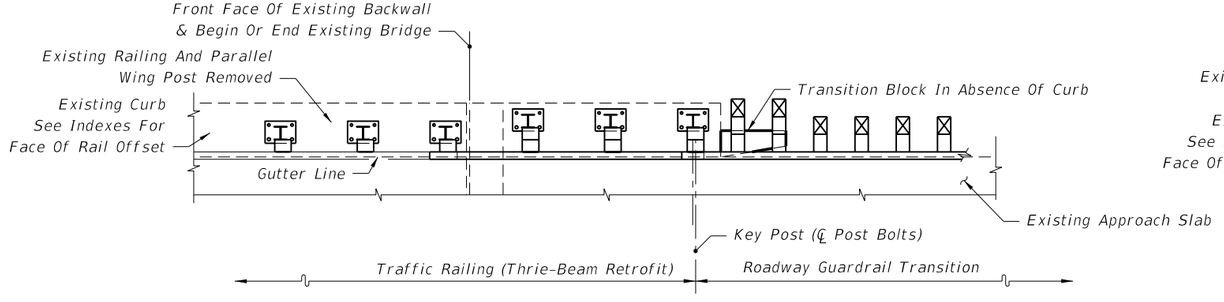

SEE INDEX NO. 474 - SCHEME 2

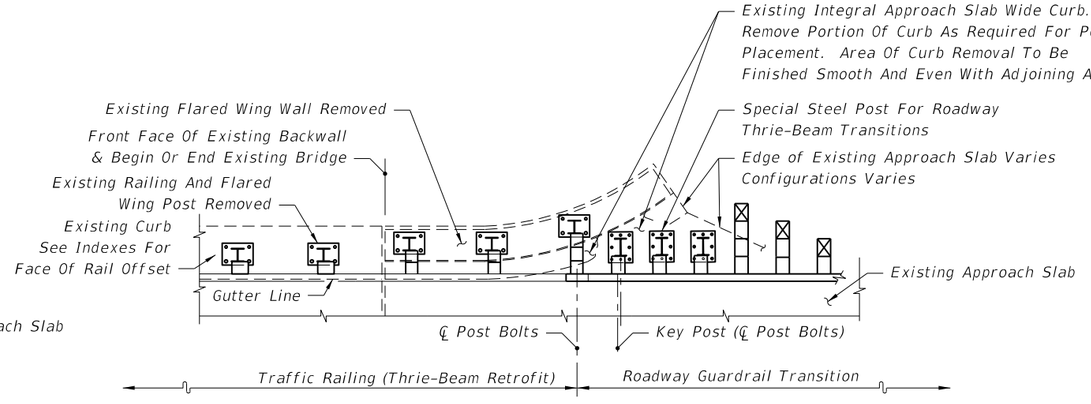

SEE INDEX NO. 474 - SCHEME 3

PARTIAL PLAN VIEWS OF GUARDRAIL APPROACH TRANSITIONS AND CONNECTIONS FOR BRIDGE TRAFFIC RAILING (THRIE-BEAM RETROFIT)

C:\d\projects\standards\roadway\00400-s\00402-07.dgn
rd960rh
1:58:18 PM
6/28/2012

LAST REVISION	REVISION	DESCRIPTION:				
07/01/07			FDOT DESIGN STANDARDS 2013	GUARDRAIL TRANSITIONS AND CONNECTIONS FOR EXISTING BRIDGES	INDEX NO. 402	SHEET NO. 7

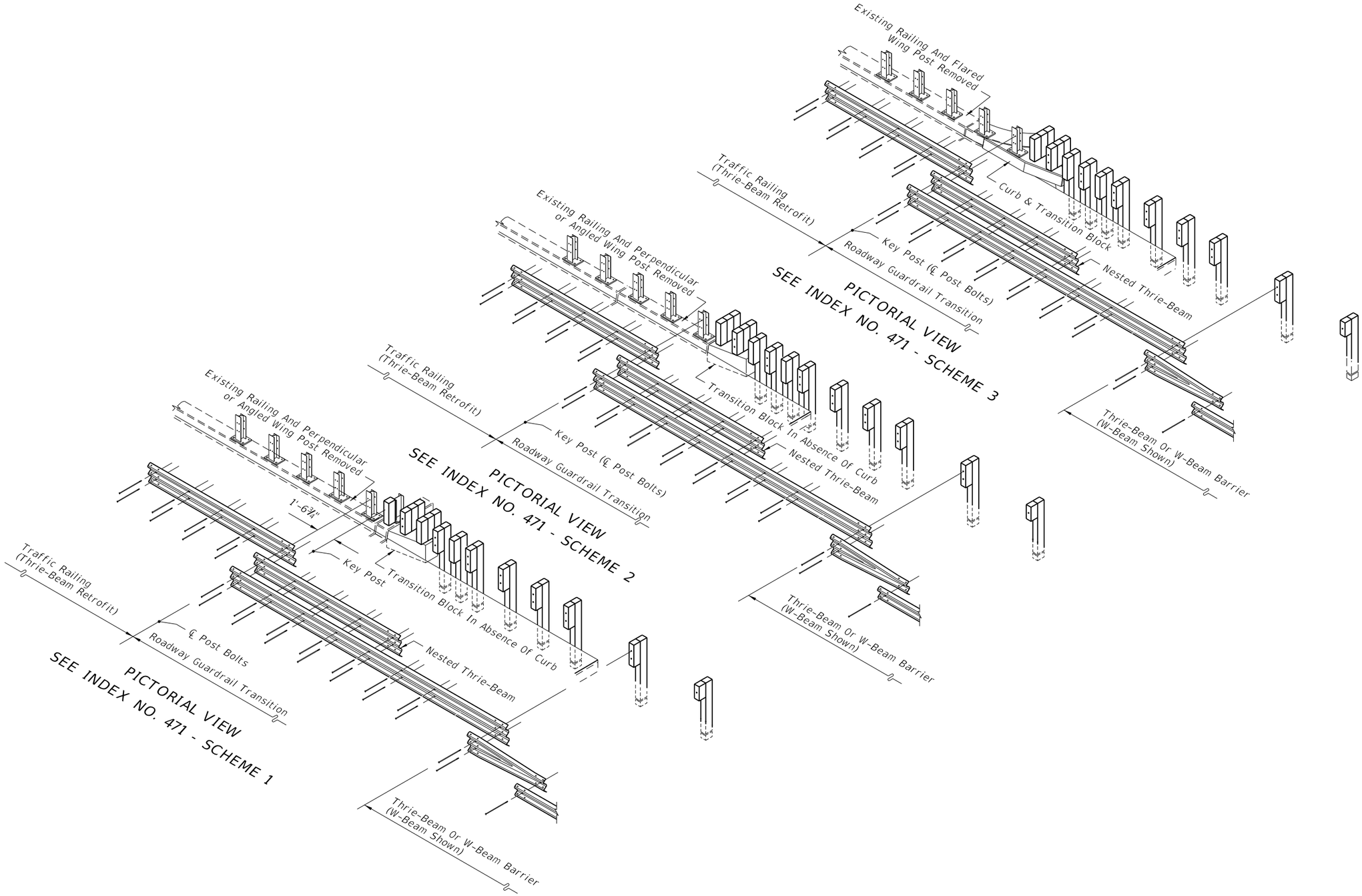

PICTORIAL VIEWS OF GUARDRAIL APPROACH TRANSITIONS AND CONNECTIONS FOR BRIDGE TRAFFIC RAILING (THRIE-BEAM RETROFIT)

LAST REVISION	REVISION	DESCRIPTION:		FDOT DESIGN STANDARDS 2013	GUARDRAIL TRANSITIONS AND CONNECTIONS FOR EXISTING BRIDGES	INDEX NO.	SHEET NO.
07/01/07						402	8

6/28/2012 1:58:21 PM rd960rh C:\d\projects\standards\roadway\00400-s\00402-08.dgn

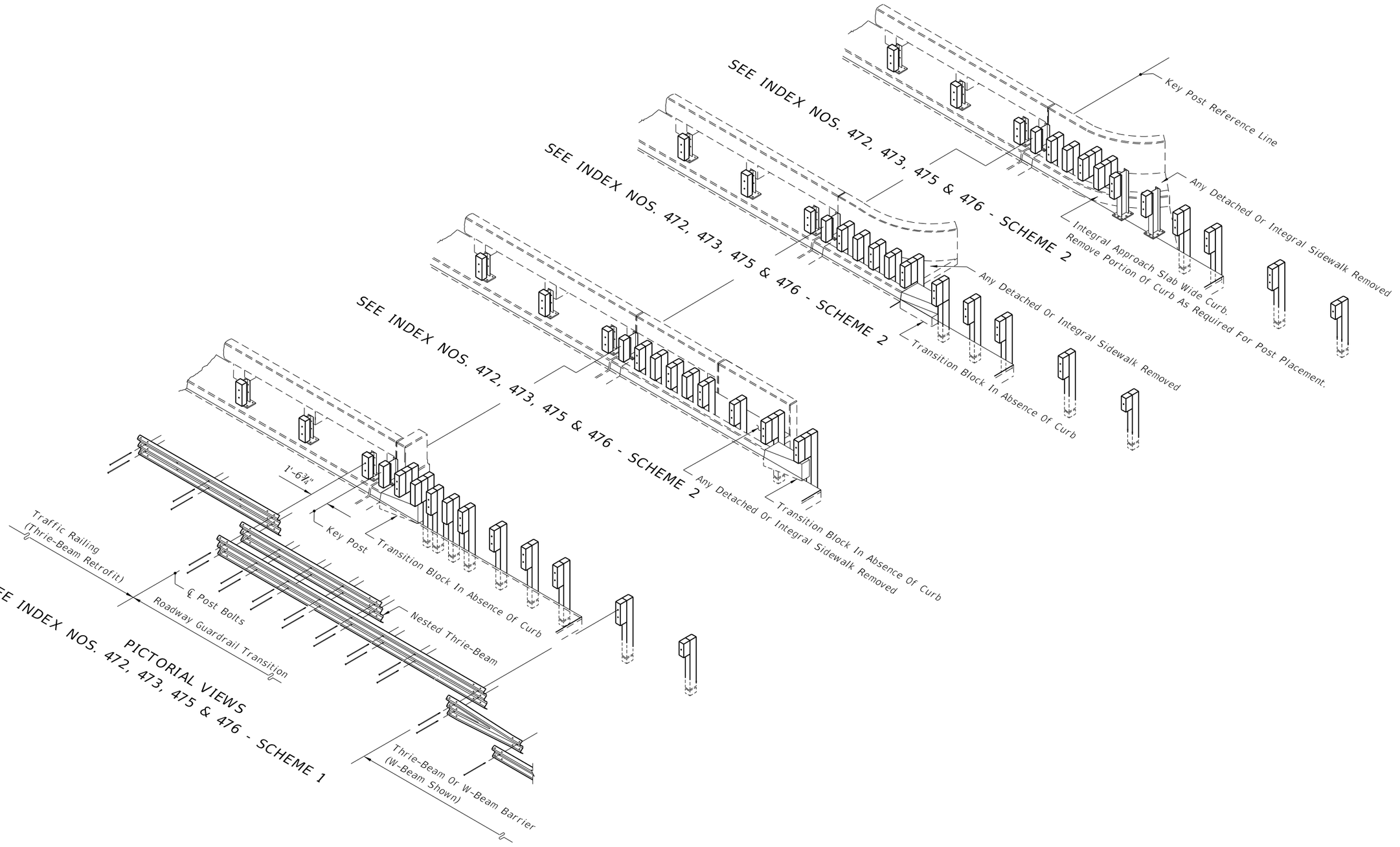

PICTORIAL VIEWS OF GUARDRAIL APPROACH TRANSITIONS AND CONNECTIONS FOR BRIDGE TRAFFIC RAILING (THRIE-BEAM RETROFIT)

LAST REVISION	REVISION	DESCRIPTION:		FDOT DESIGN STANDARDS 2013	GUARDRAIL TRANSITIONS AND CONNECTIONS FOR EXISTING BRIDGES	INDEX NO.	SHEET NO.
07/01/07						402	9

6/28/2012 1:58:23 PM rd960rh C:\d\projects\standards\roadway\00400-s\00402-09.dgn

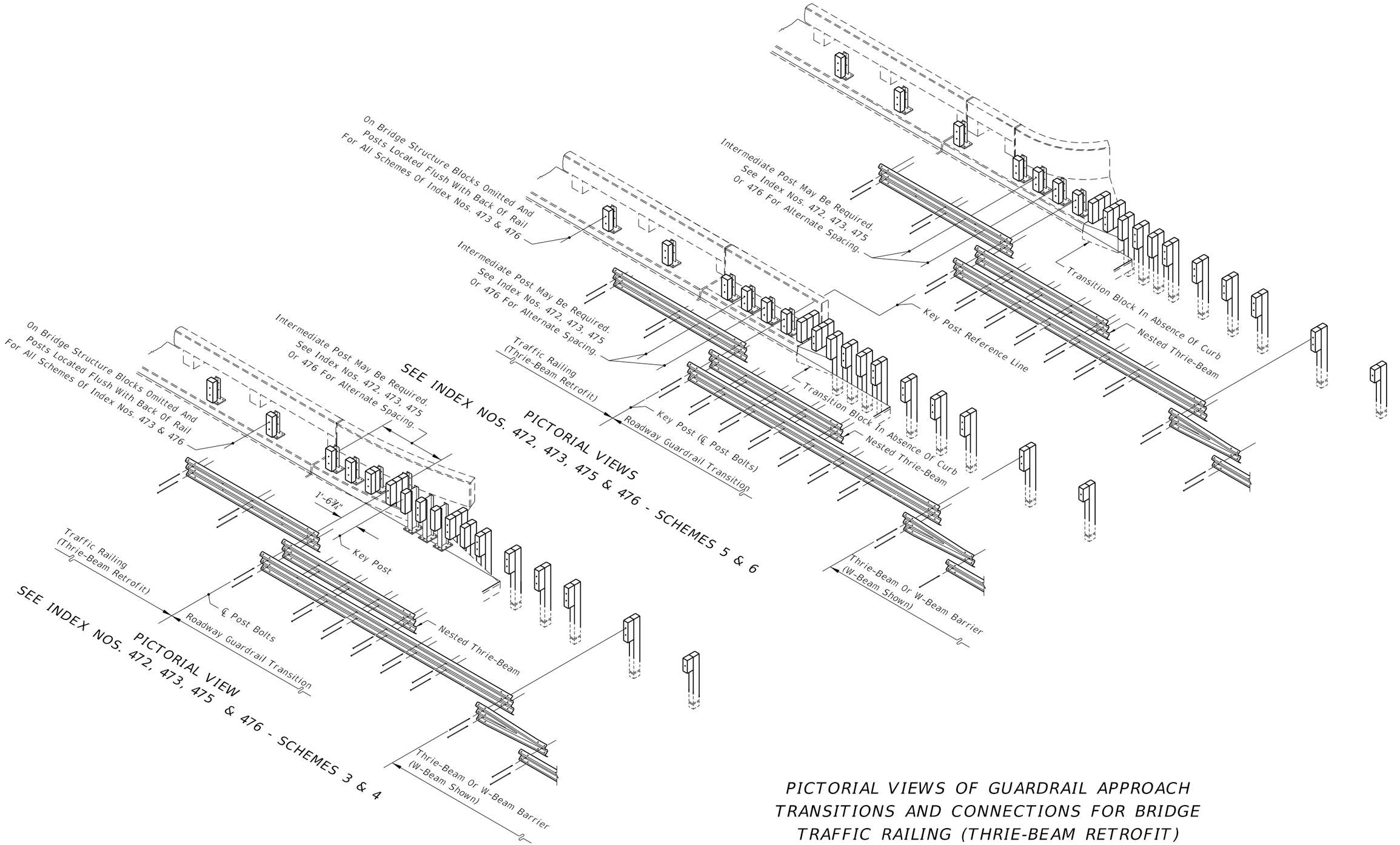

PICTORIAL VIEWS OF GUARDRAIL APPROACH TRANSITIONS AND CONNECTIONS FOR BRIDGE TRAFFIC RAILING (THRIE-BEAM RETROFIT)

LAST REVISION	REVISION	DESCRIPTION:		FDOT DESIGN STANDARDS 2013	GUARDRAIL TRANSITIONS AND CONNECTIONS FOR EXISTING BRIDGES	INDEX NO.	SHEET NO.
07/01/07						402	10

6/28/2012 1:58:25 PM rd960rh C:\d\projects\standards\roadway\00400-s\00402-10.dgn

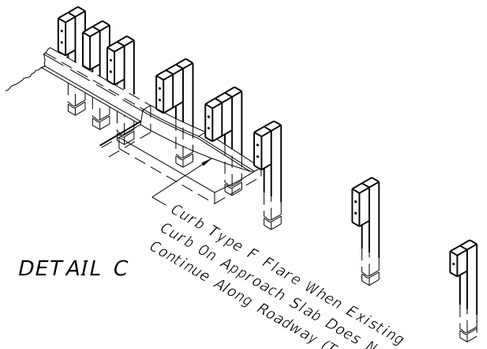

DETAIL C

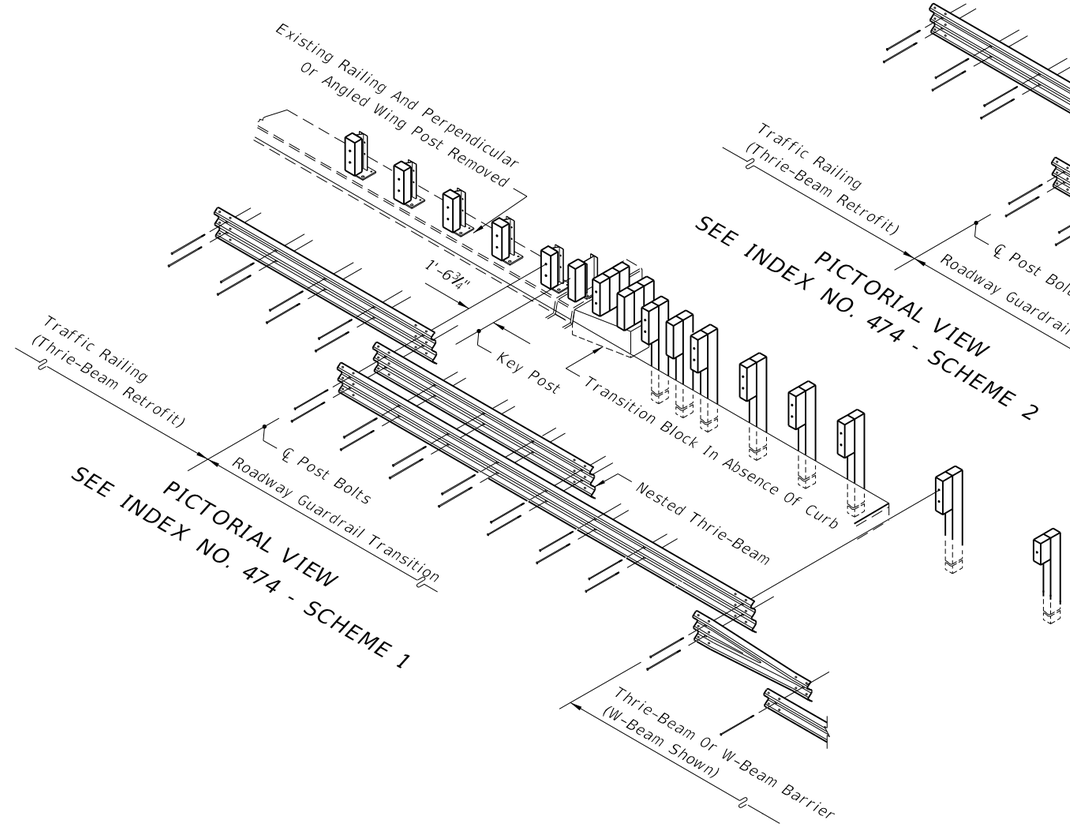

PICTORIAL VIEW
SEE INDEX NO. 474 - SCHEME 1

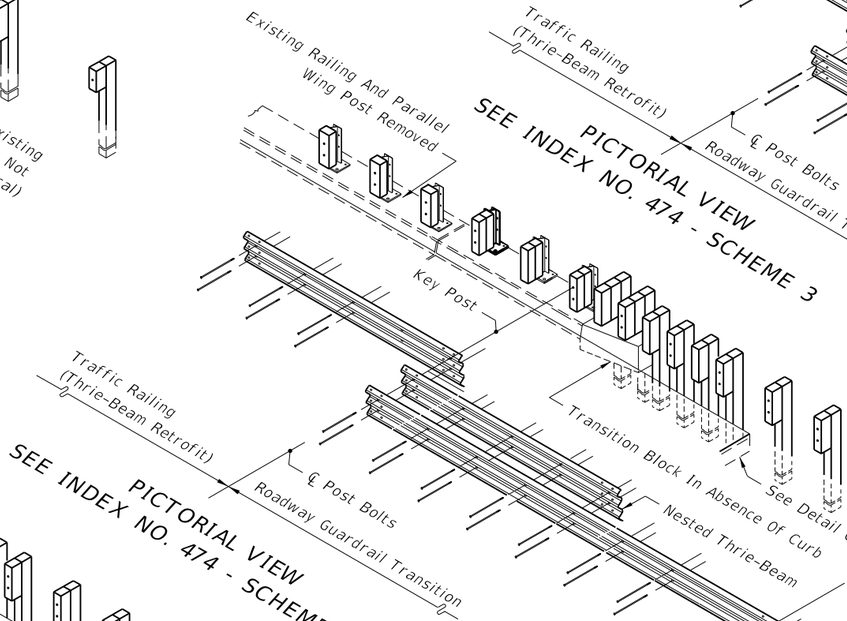

PICTORIAL VIEW
SEE INDEX NO. 474 - SCHEME 2

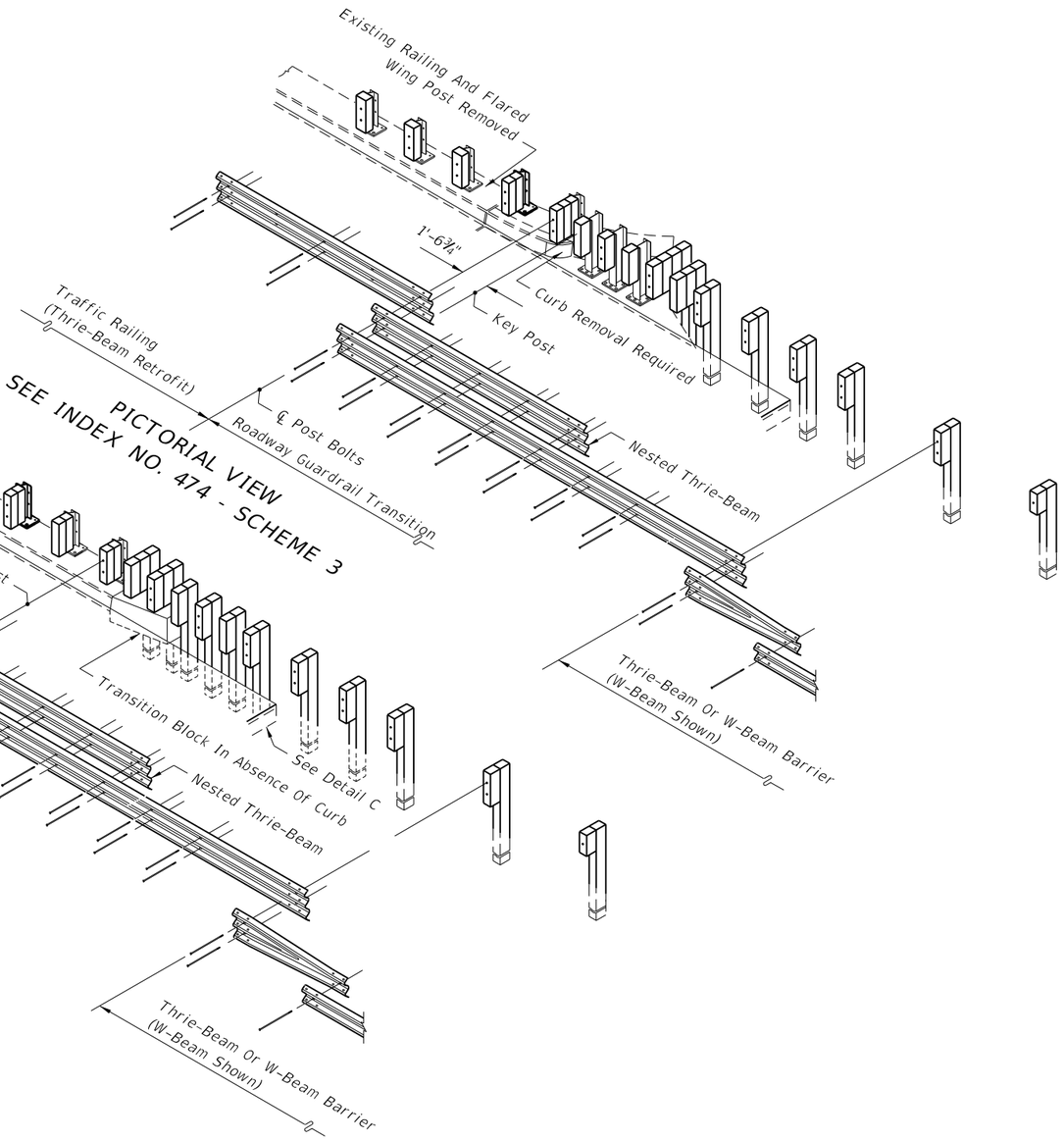

PICTORIAL VIEW
SEE INDEX NO. 474 - SCHEME 3

PICTORIAL VIEWS OF GUARDRAIL APPROACH TRANSITIONS AND CONNECTIONS FOR BRIDGE TRAFFIC RAILING (THRIE-BEAM RETROFIT)

LAST REVISION	REVISION	DESCRIPTION:		FDOT DESIGN STANDARDS 2013	GUARDRAIL TRANSITIONS AND CONNECTIONS FOR EXISTING BRIDGES	INDEX NO.	SHEET NO.
07/01/07						402	11

6/28/2012 1:58:27 PM rd960rh C:\d\projects\standards\roadway\00400-s\00402-11.dgn

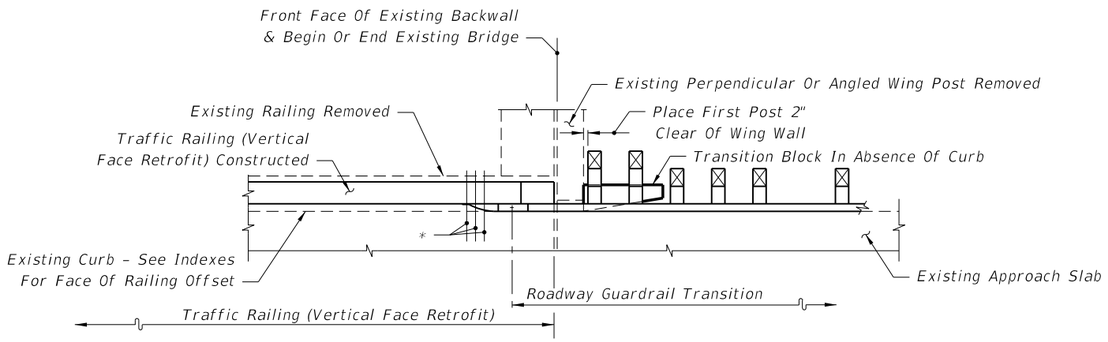

SEE INDEX NO. 481 - SCHEME 1

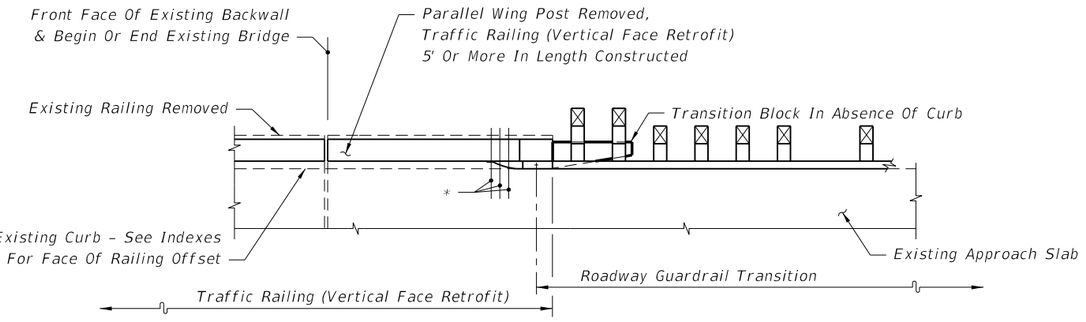

SEE INDEX NO. 481 - SCHEME 2

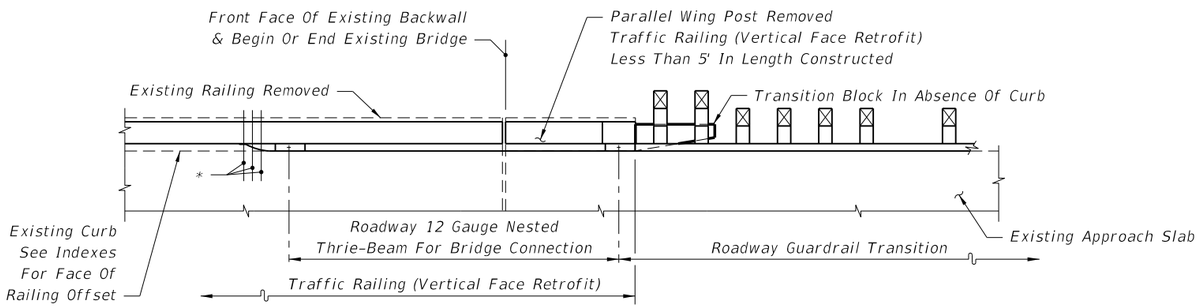

SEE INDEX NO. 481 - SCHEME 2

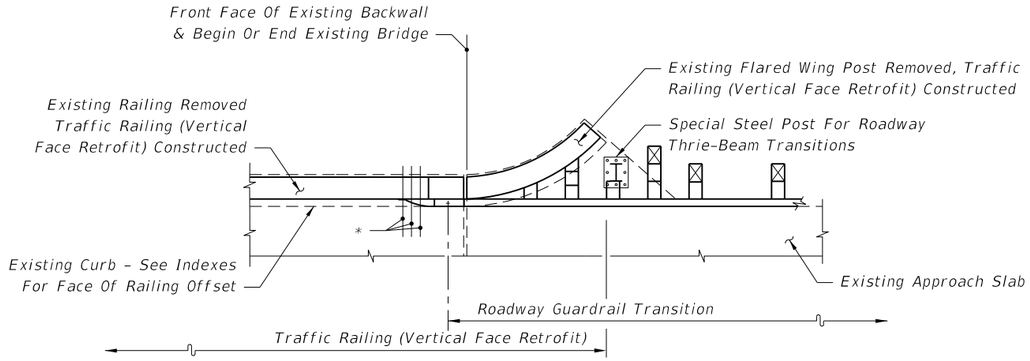

SEE INDEX NO. 481 - SCHEME 3

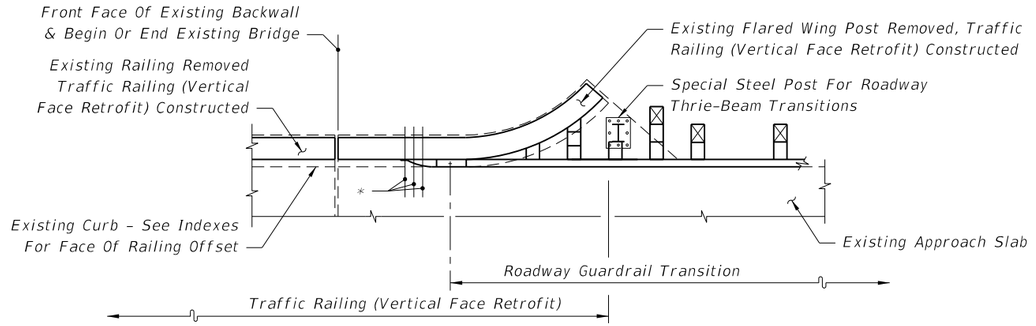

SEE INDEX NO. 481 - SCHEME 3

Note:
* 21"x 12" x ⅜" Thrie-Beam Terminal Connector Plate (Back-Up Plate), And ⅞"Ø x 12" Long HS Hex Bolts And Nuts (5 Reqd.) With 2¼" OD Plain Round Washers Under Heads And Nuts

PARTIAL PLAN VIEWS OF TRAFFIC RAILING (VERTICAL FACE RETROFIT)

C:\d\projects\standards\roadway\00400-s\00402-12.dgn rd960rh 1:58:29 PM 6/28/2012

LAST REVISION	REVISION	DESCRIPTION:			INDEX NO.	SHEET NO.
07/01/07			FDOT DESIGN STANDARDS 2013	GUARDRAIL TRANSITIONS AND CONNECTIONS FOR EXISTING BRIDGES	402	12

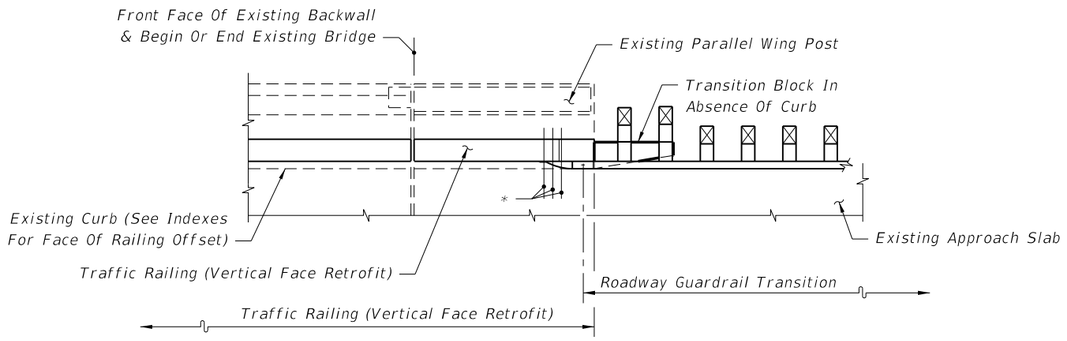

SEE INDEX NO. 482 - SCHEME 2

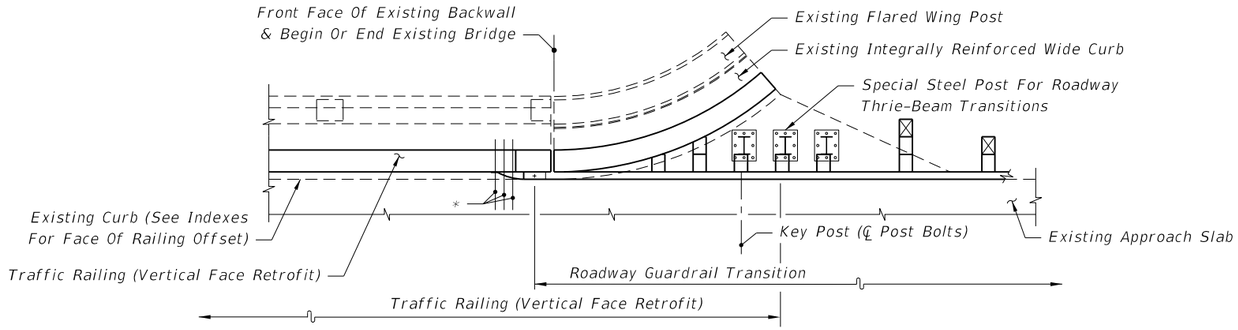

SEE INDEX NO. 482- SCHEME 3

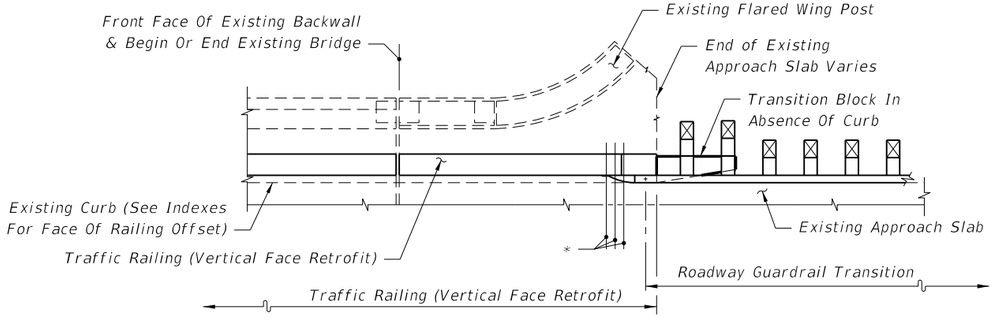

SEE INDEX NO. 482 - SCHEME 2

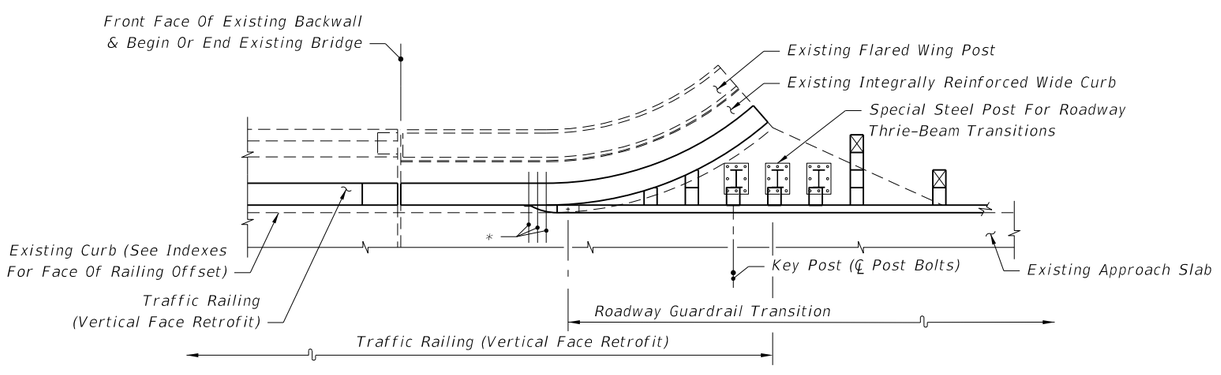

SEE INDEX NO. 482- SCHEME 3

Note:
* 21" x 12" x ⅝" Thrie-Beam Terminal Connector Plate (Back-Up Plate), And ⅞"Ø x 12" Long
HS Hex Bolts And Nuts (5 Reqd.) With 2¼" OD Plain Round Washers Under Heads And Nuts

PARTIAL PLAN VIEWS OF TRAFFIC RAILING (VERTICAL FACE RETROFIT)

C:\d\projects\standards\roadway\00400-s\00402-13.dgn
rd960rh
1:58:31 PM
6/28/2012

LAST REVISION	REVISION	DESCRIPTION:		FDOT DESIGN STANDARDS 2013	GUARDRAIL TRANSITIONS AND CONNECTIONS FOR EXISTING BRIDGES	INDEX NO.	SHEET NO.
07/01/07						402	13

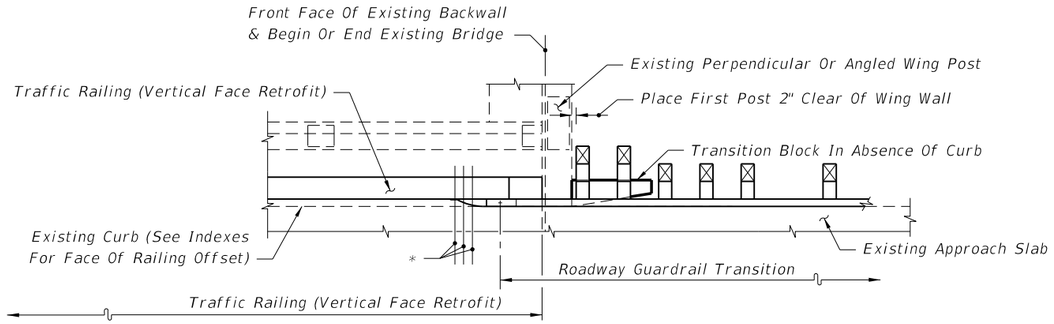

SEE INDEX NO. 482 - SCHEME 1

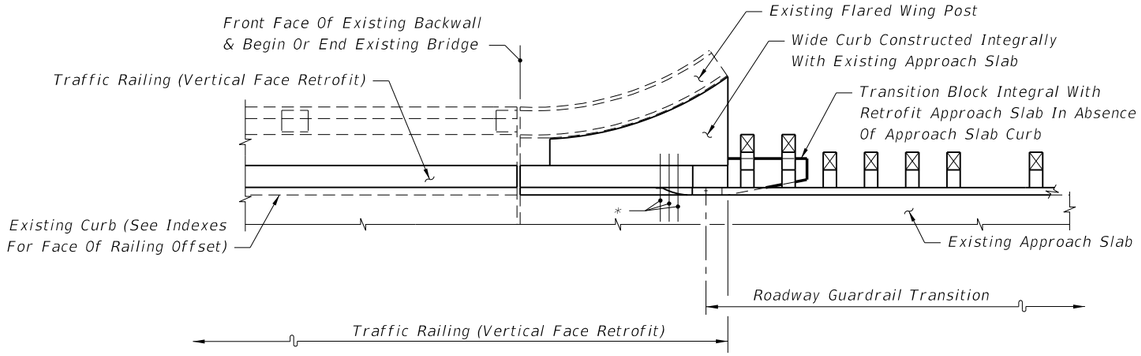

SEE INDEX NO. 482 - SCHEME 5

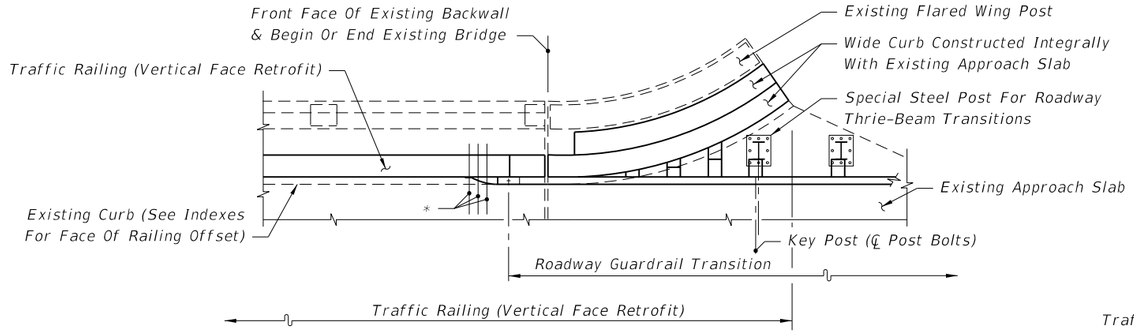

SEE INDEX NO. 482 - SCHEME 4

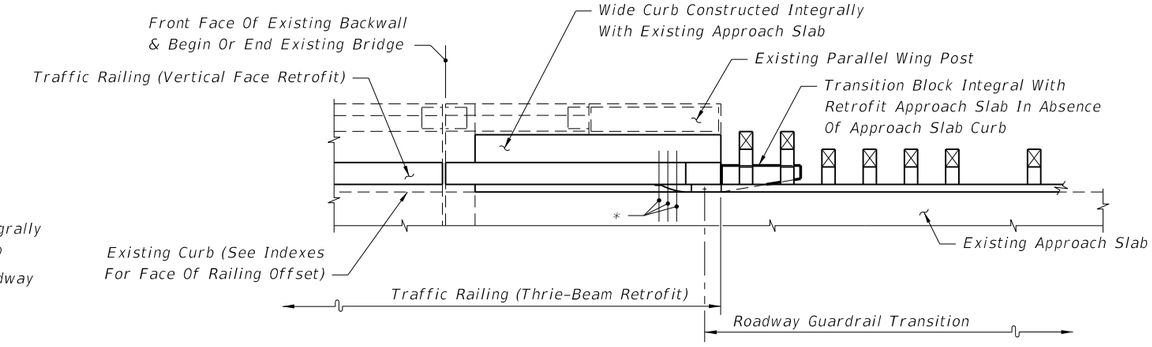

SEE INDEX NO. 482 - SCHEME 5

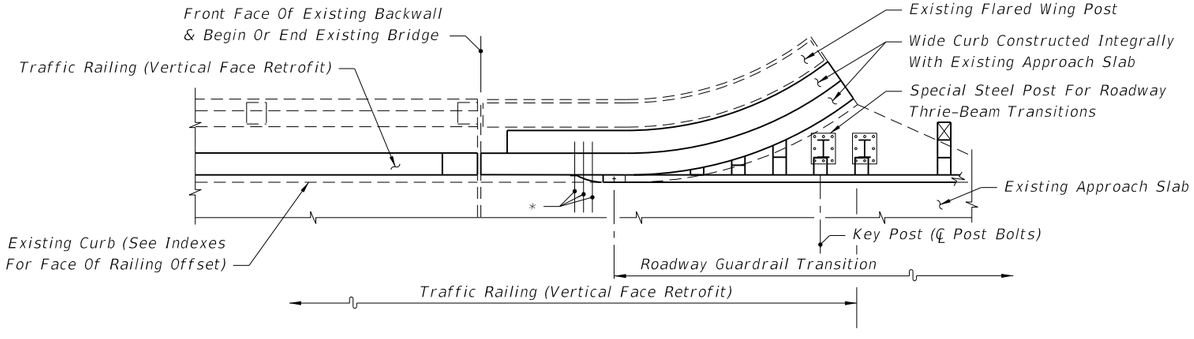

SEE INDEX NO. 482 - SCHEME 4

Note:
* 21" x 12" x ⅝" Thrie-Beam Terminal Connector Plate (Back-Up Plate), And ⅞"Ø x 12" Long HS Hex Bolts And Nuts (5 Reqd.) With 2¼" OD Plain Round Washers Under Heads And Nuts

PARTIAL PLAN VIEWS OF TRAFFIC RAILING (VERTICAL FACE RETROFIT)

LAST REVISION	REVISION	DESCRIPTION:			INDEX NO.	SHEET NO.
07/01/07			FDOT DESIGN STANDARDS 2013	GUARDRAIL TRANSITIONS AND CONNECTIONS FOR EXISTING BRIDGES	402	14

C:\d\projects\standards\roadway\00400-s\00402-14.dgn
rd960rh
1:58:33 PM
6/28/2012

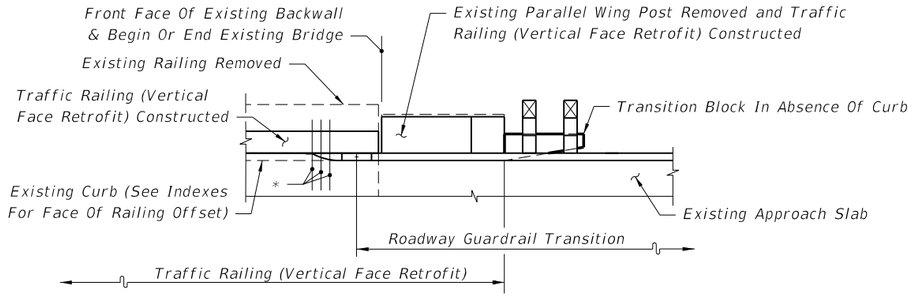

SEE INDEX NO. 483 - SCHEME 2

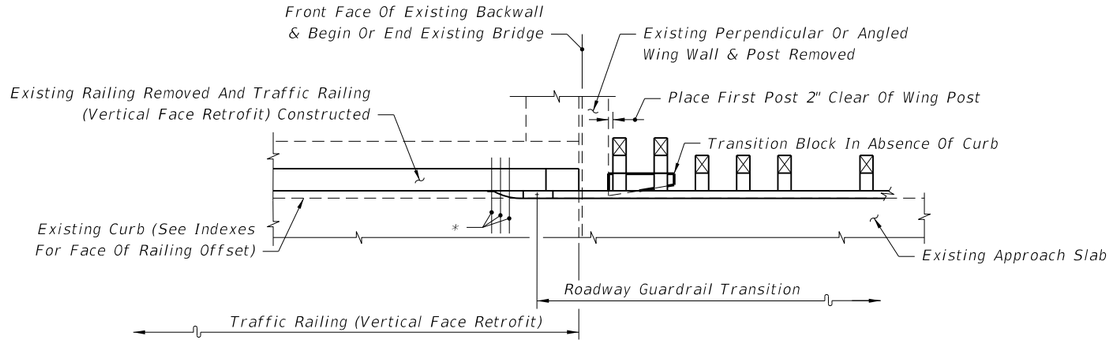

SEE INDEX NO. 483 - SCHEME 1

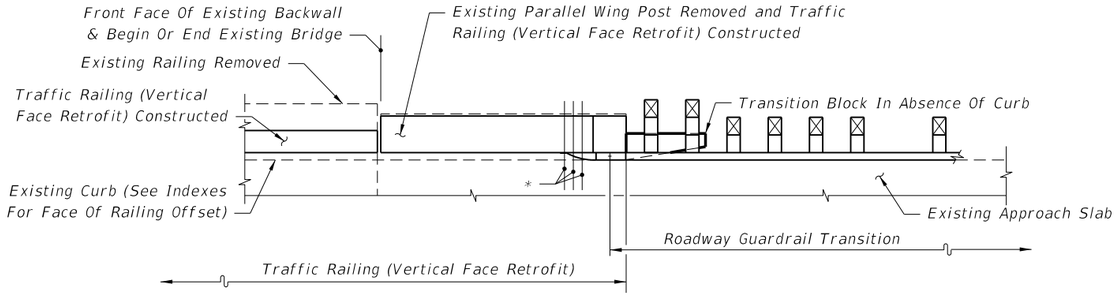

SEE INDEX NO. 483 - SCHEME 2

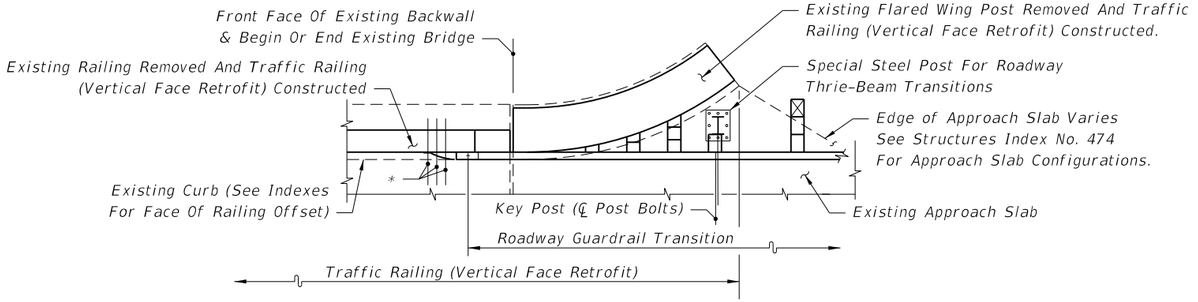

SEE INDEX NO. 483 - SCHEME 3

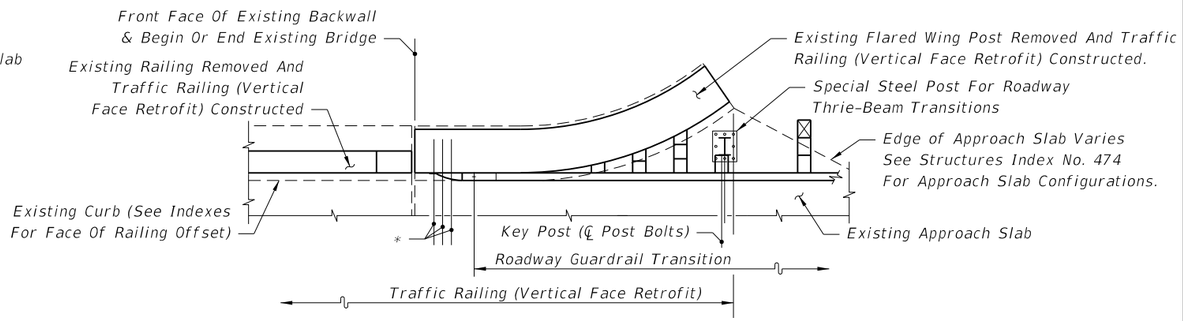

SEE INDEX NO. 483 - SCHEME 3

Note:
*21" x 12" x ⅝" Thrie-Beam Terminal Connector Plate (Back-Up Plate), And ⅞"Ø HS Hex Bolts And Nuts (12" Long For Scheme 1 And Length To Fit For Schemes 2 And 3) (5 Reqd.) With 2¼" OD Plain Round Washers Under Heads And Nuts

PARTIAL PLAN VIEWS OF TRAFFIC RAILING (VERTICAL FACE RETROFIT)

6/28/2012 1:58:35 PM rd960rh C:\d\projects\standards\roadway\00400-s\00402-15.dgn

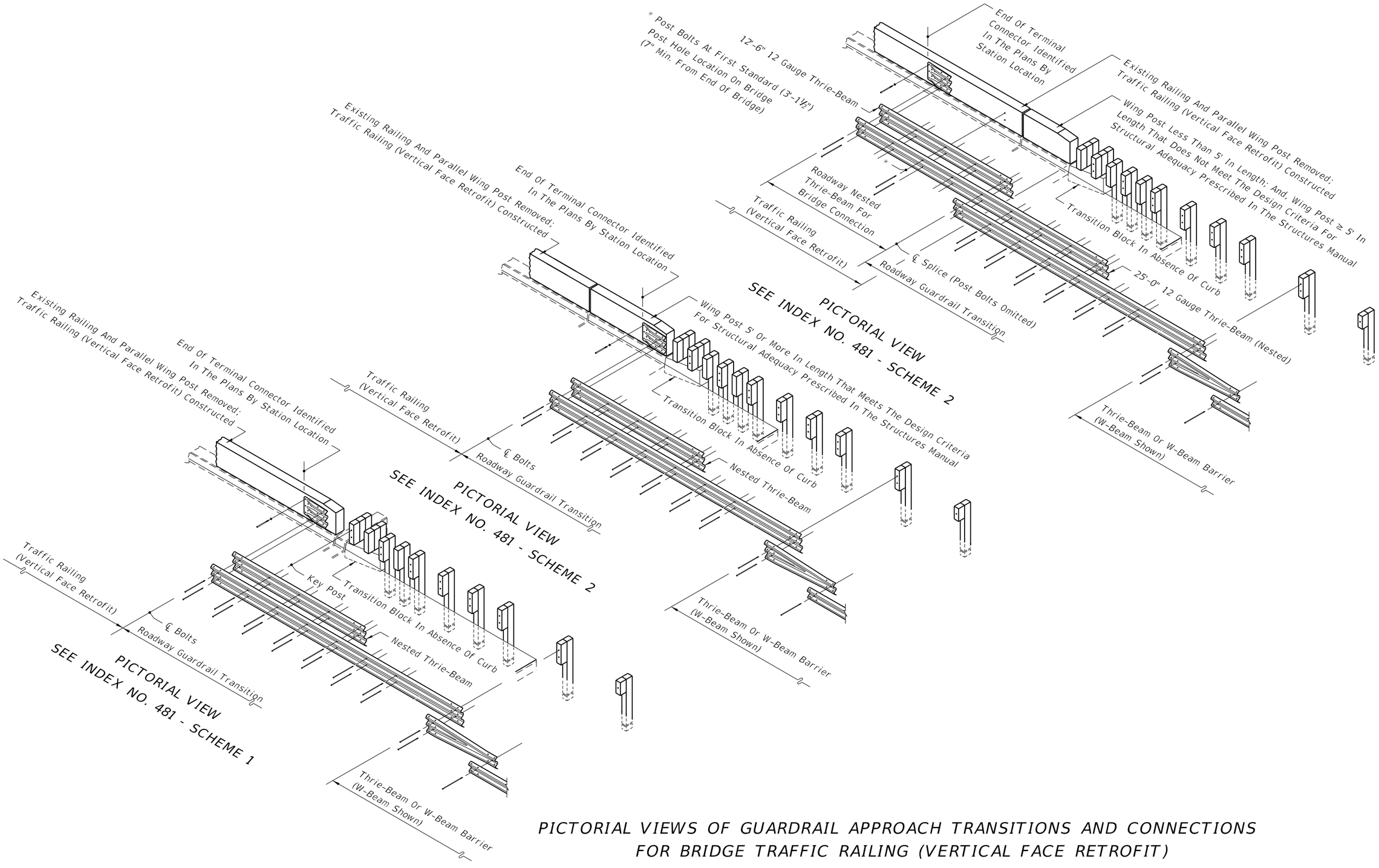

PICTORIAL VIEWS OF GUARDRAIL APPROACH TRANSITIONS AND CONNECTIONS FOR BRIDGE TRAFFIC RAILING (VERTICAL FACE RETROFIT)

6/28/2012 1:58:37 PM rd960rh C:\d\projects\standards\roadway\00400-s\00402-16.dgn

LAST REVISION	REVISION	DESCRIPTION:				
07/01/07			FDOT DESIGN STANDARDS 2013	GUARDRAIL TRANSITIONS AND CONNECTIONS FOR EXISTING BRIDGES	INDEX NO. 402	SHEET NO. 16

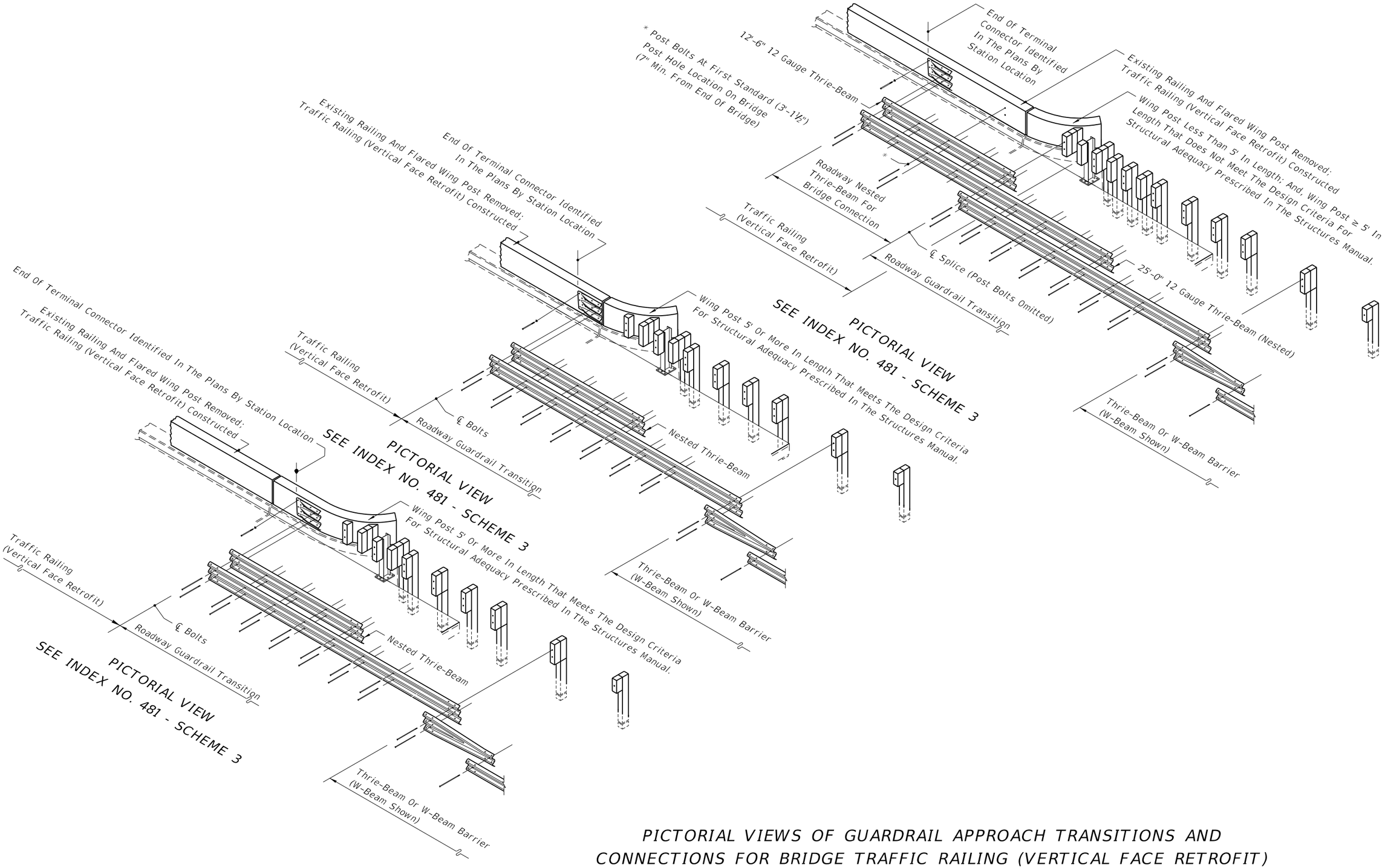

PICTORIAL VIEWS OF GUARDRAIL APPROACH TRANSITIONS AND CONNECTIONS FOR BRIDGE TRAFFIC RAILING (VERTICAL FACE RETROFIT)

LAST REVISION	REVISION	DESCRIPTION:		FDOT DESIGN STANDARDS 2013	GUARDRAIL TRANSITIONS AND CONNECTIONS FOR EXISTING BRIDGES	INDEX NO.	SHEET NO.
07/01/07						402	17

6/28/2012 1:58:39 PM rd960rh C:\d\projects\standards\roadway\00400-s\00402-17.dgn

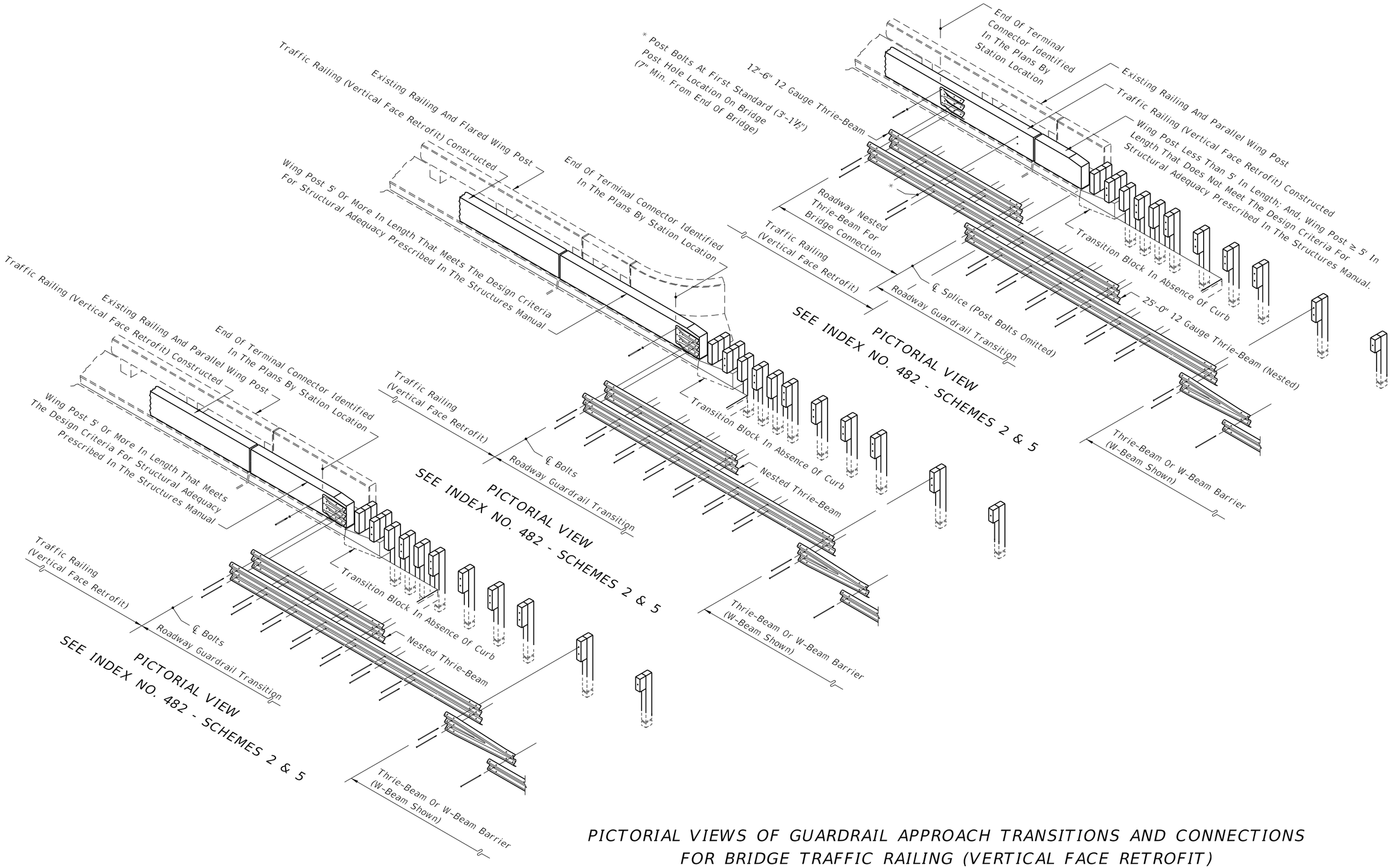

PICTORIAL VIEWS OF GUARDRAIL APPROACH TRANSITIONS AND CONNECTIONS FOR BRIDGE TRAFFIC RAILING (VERTICAL FACE RETROFIT)

C:\d\projects\standards\roadway\00400-s\00402-18.dgn
rd960rh
1:58:41 PM
6/28/2012

LAST REVISION	REVISION	DESCRIPTION:		FDOT DESIGN STANDARDS 2013	GUARDRAIL TRANSITIONS AND CONNECTIONS FOR EXISTING BRIDGES	INDEX NO.	SHEET NO.
07/01/07						402	18

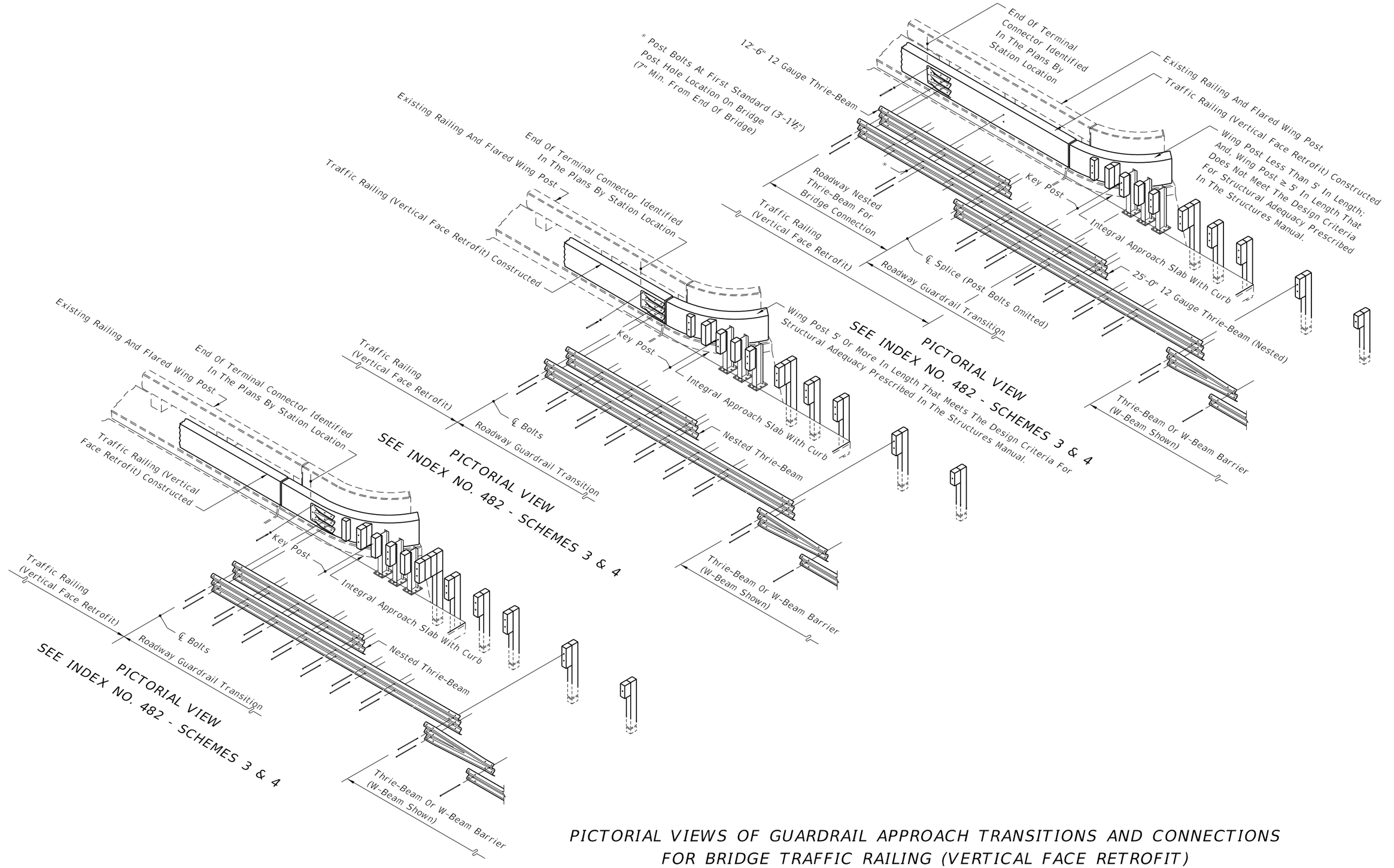

PICTORIAL VIEWS OF GUARDRAIL APPROACH TRANSITIONS AND CONNECTIONS FOR BRIDGE TRAFFIC RAILING (VERTICAL FACE RETROFIT)

LAST REVISION	REVISION	DESCRIPTION:		FDOT DESIGN STANDARDS 2013	GUARDRAIL TRANSITIONS AND CONNECTIONS FOR EXISTING BRIDGES	INDEX NO.	SHEET NO.
07/01/07						402	19

6/28/2012 1:58:44 PM rd960rh C:\d\projects\standards\roadway\00400-s\00402-19.dgn

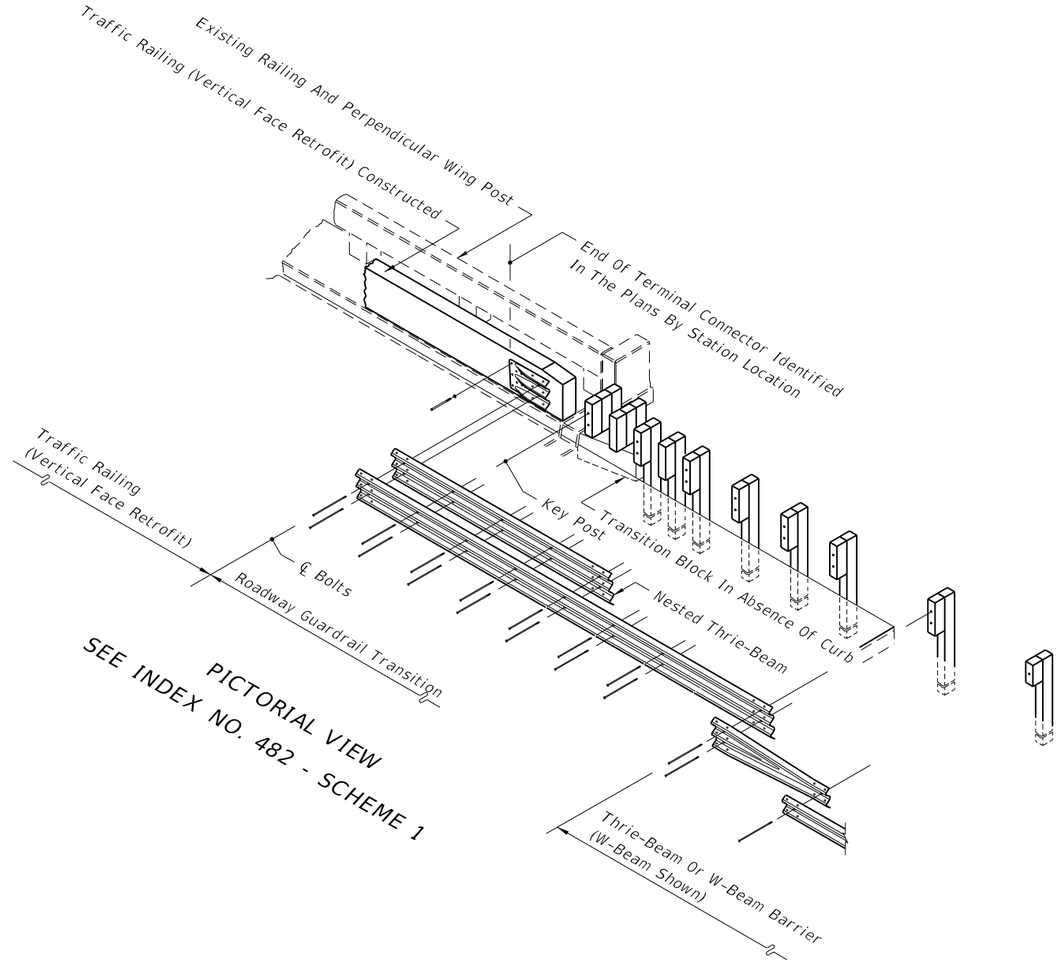

PICTORIAL VIEW
SEE INDEX NO. 482 - SCHEME 1

PICTORIAL VIEWS OF GUARDRAIL APPROACH TRANSITIONS AND CONNECTIONS FOR BRIDGE TRAFFIC RAILING (VERTICAL FACE RETROFIT)

6/28/2012 1:58:46 PM rd960rh C:\d\projects\standards\roadway\00400-s\00402-20.dgn

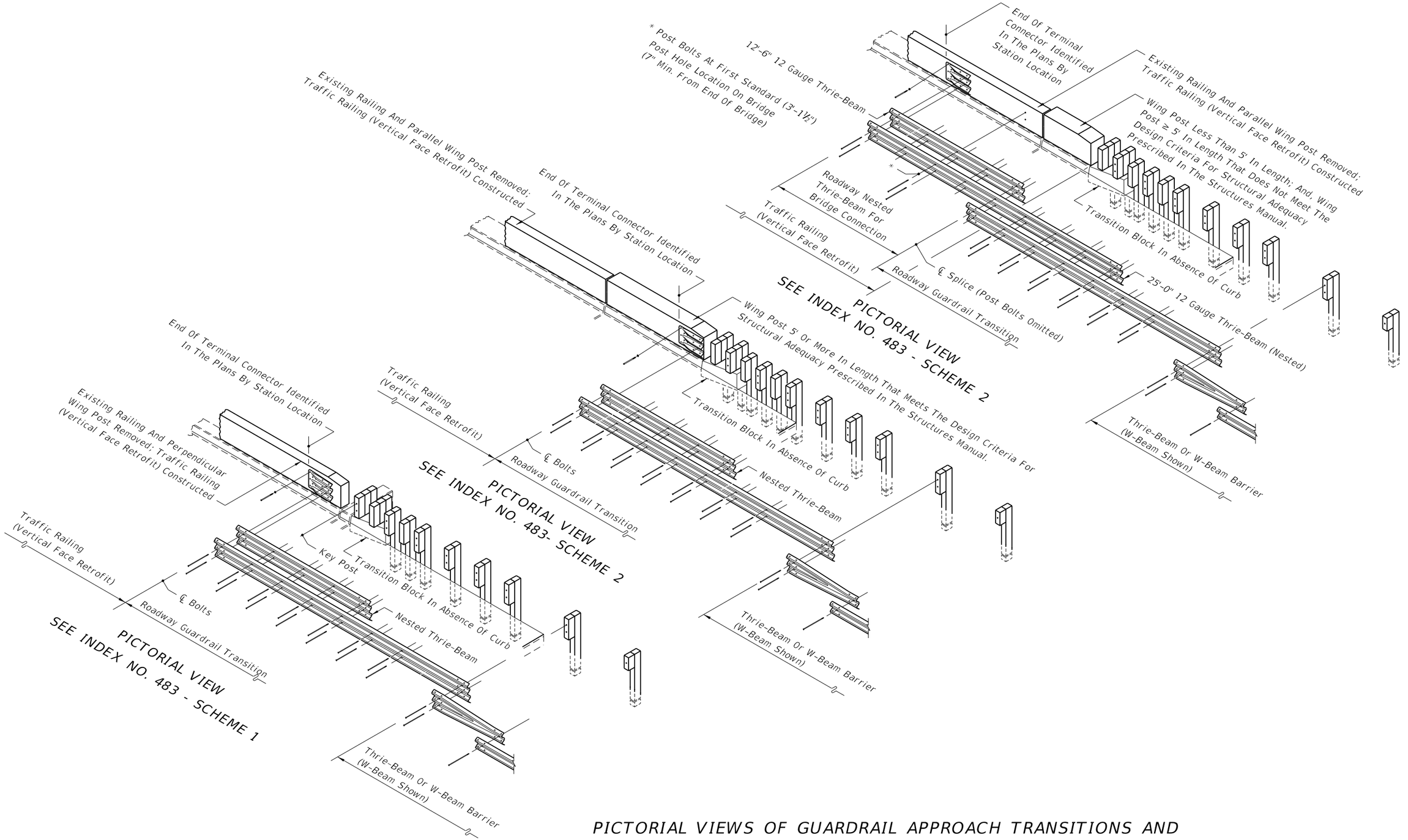

PICTORIAL VIEWS OF GUARDRAIL APPROACH TRANSITIONS AND CONNECTIONS FOR BRIDGE TRAFFIC RAILING (VERTICAL FACE RETROFIT)

6/28/2012 1:58:48 PM rd960rh C:\d\projects\standards\roadway\00400-s\00402-21.dgn

LAST REVISION	REVISION	DESCRIPTION:		FDOT DESIGN STANDARDS 2013	GUARDRAIL TRANSITIONS AND CONNECTIONS FOR EXISTING BRIDGES	INDEX NO.	SHEET NO.
07/01/07						402	21

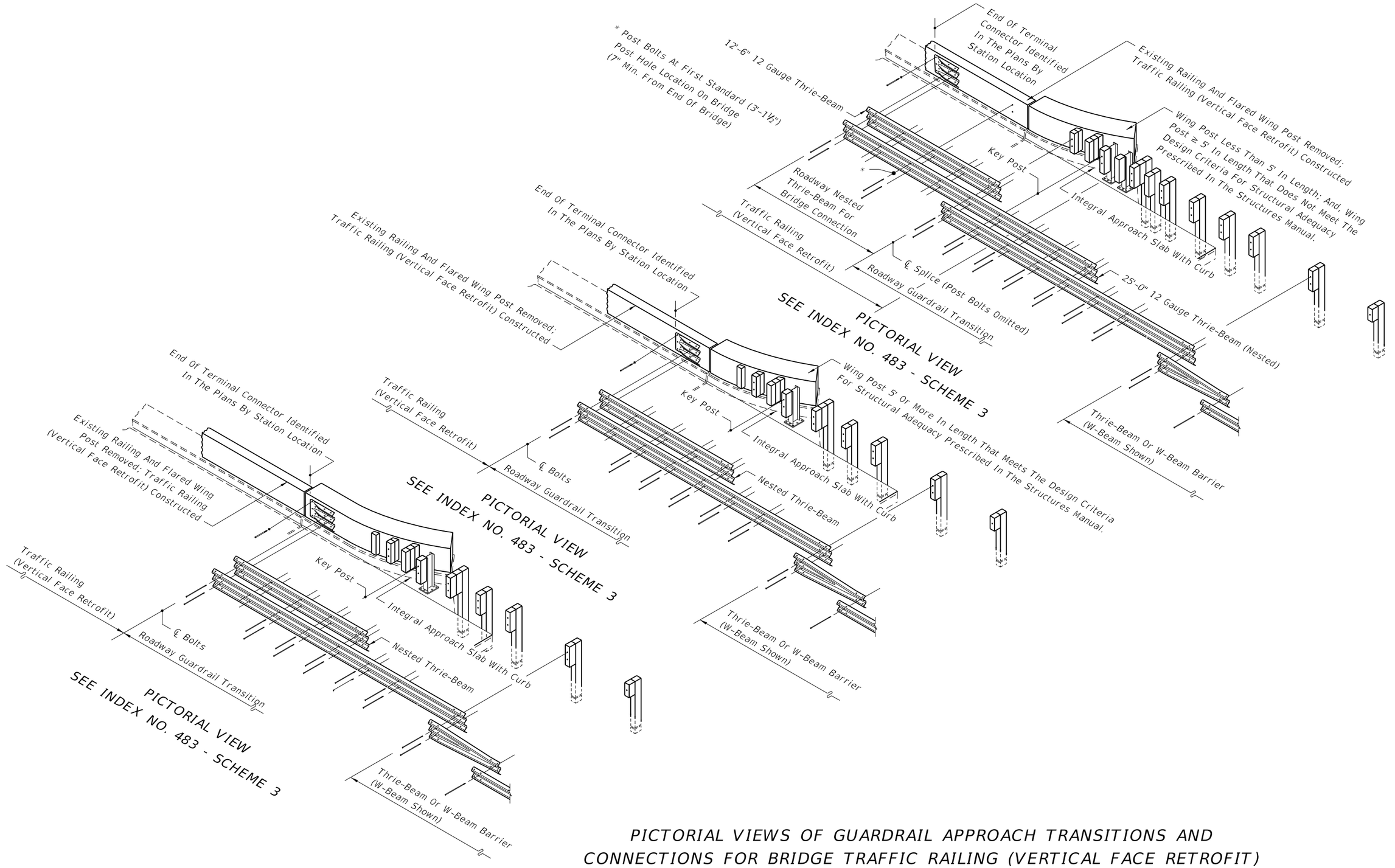

PICTORIAL VIEWS OF GUARDRAIL APPROACH TRANSITIONS AND CONNECTIONS FOR BRIDGE TRAFFIC RAILING (VERTICAL FACE RETROFIT)

LAST REVISION	REVISION	DESCRIPTION:		FDOT DESIGN STANDARDS 2013	GUARDRAIL TRANSITIONS AND CONNECTIONS FOR EXISTING BRIDGES	INDEX NO.	SHEET NO.
07/01/07						402	22

6/28/2012 1:58:50 PM rd960rh C:\d\projects\standards\roadway\00400-s\00402-22.dgn

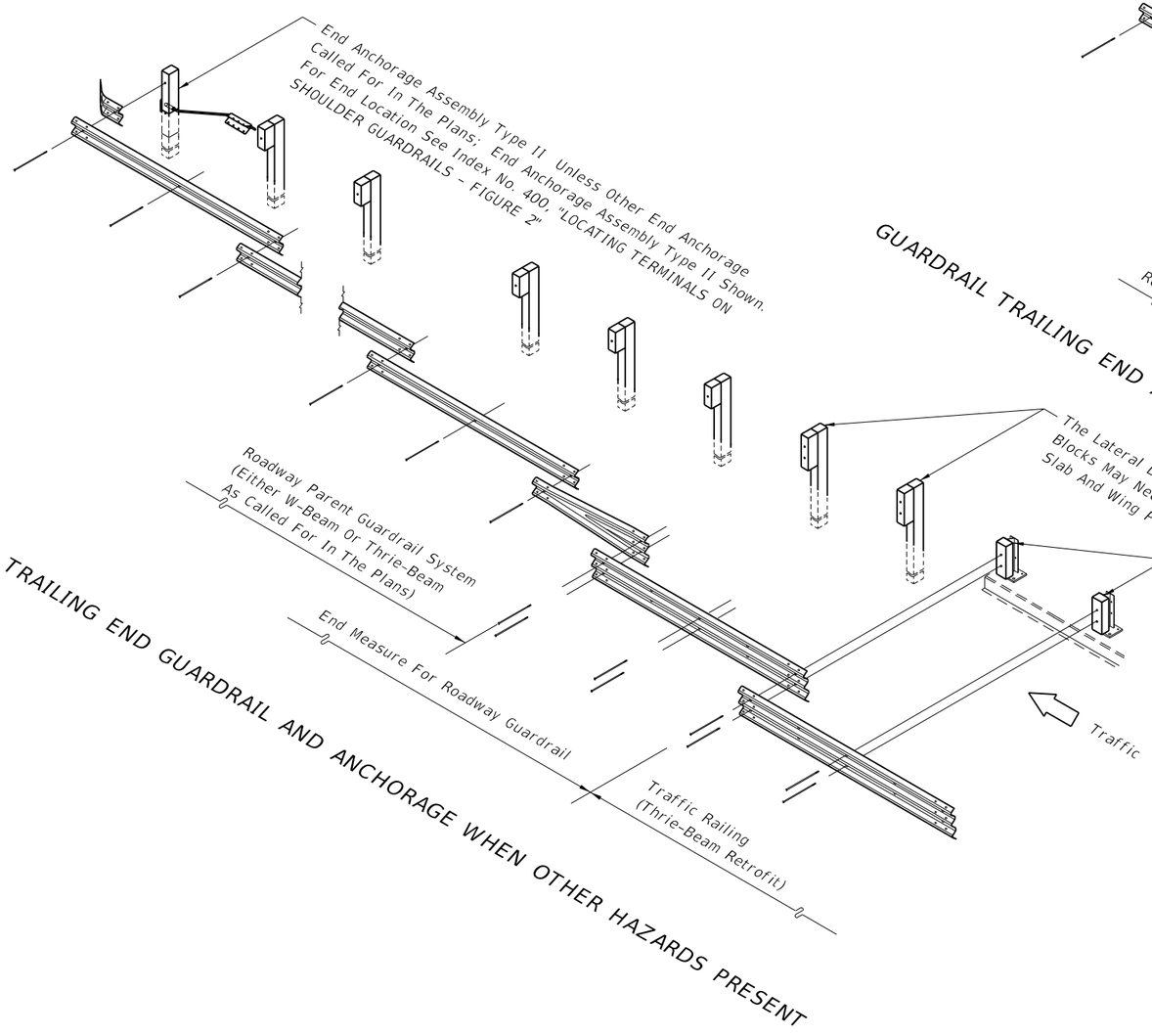

TRAILING END GUARDRAIL AND ANCHORAGE WHEN OTHER HAZARDS PRESENT

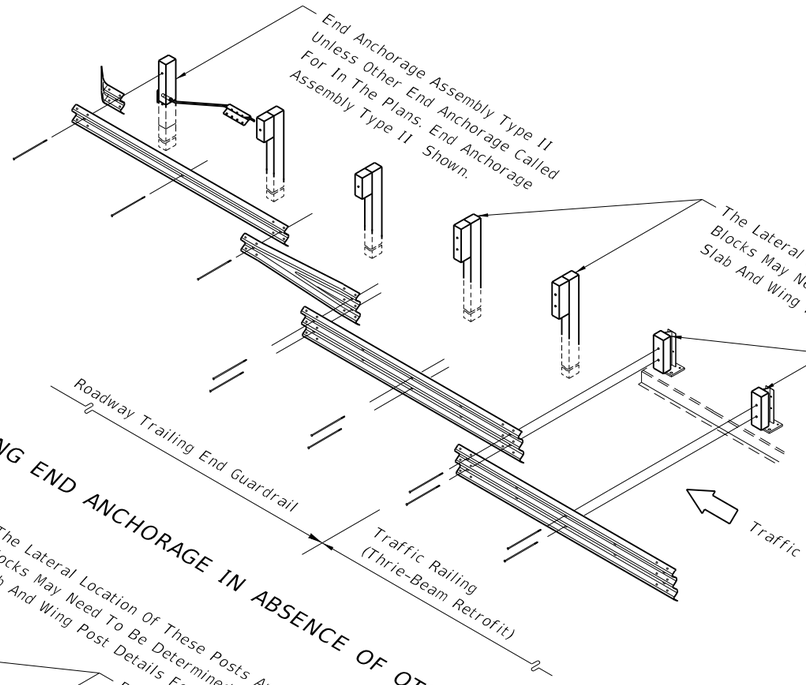

GUARDRAIL TRAILING END ANCHORAGE IN ABSENCE OF OTHER HAZARDS

THRIE-BEAM RETROFIT NOTES

1. See indexes for bridge thrie-beam traffic railing retrofits.
2. Trailing end guardrail to be paid for under the contract unit price for the parent roadway guardrail; end measure includes length of end anchorage assembly; additional payment made for end anchorage assembly. No additional payment for connecting roadway thrie-beam to bridge thrie-beam retrofit.

NOTES FOR TRAILING END TRAFFIC RAILING VERTICAL FACE RETROFITS

1. Where Guardrail Extensions Are Required Beyond The Trailing End Of Bridges With Traffic Railing Vertical Face Retrofits, Guardrail Connections To The Bridge Railing Will Be By SPECIAL END SHOE For W-Beam Guardrail Extensions And By THRIE-BEAM TERMINAL CONNECTOR For Thrie-Beam Guardrail Extensions.
2. Install W-Beam Special End Shoes and Thrie-Beam Terminal Connectors With Back-up Plates, And ⅞"Ø HS Hex Bolts And Nuts (12" Long) with 2¼" OD Plain Round Washers Under Heads And Nuts (4 Required For Special End Shoes And 5 Required For Thrie-Beam Terminal Connectors). Back-Up Plates For Special End Shoes are 12"x12"x⅝" And For Terminal Connector 21"x12"x⅝".
3. Payment For Connecting Trailing End Special End Shoes And Thrie-Beam Terminal Connectors To Traffic Railing Vertical Face Retrofits Will Be Made Under The Contract Unit Price For Guardrail Bridge Anchorage Assembly, EA..

TRAILING END GUARDRAIL AND ANCHORAGE FOR BRIDGE TRAFFIC RAILING (THRIE BEAM RETROFITS)

LAST REVISION	REVISION	DESCRIPTION:		FDOT DESIGN STANDARDS 2013	GUARDRAIL TRANSITIONS AND CONNECTIONS FOR EXISTING BRIDGES	INDEX NO.	SHEET NO.
07/01/07						402	23

6/28/2012 1:58:52 PM rd960rh C:\d\projects\standards\roadway\00400-s\00402-23.dgn

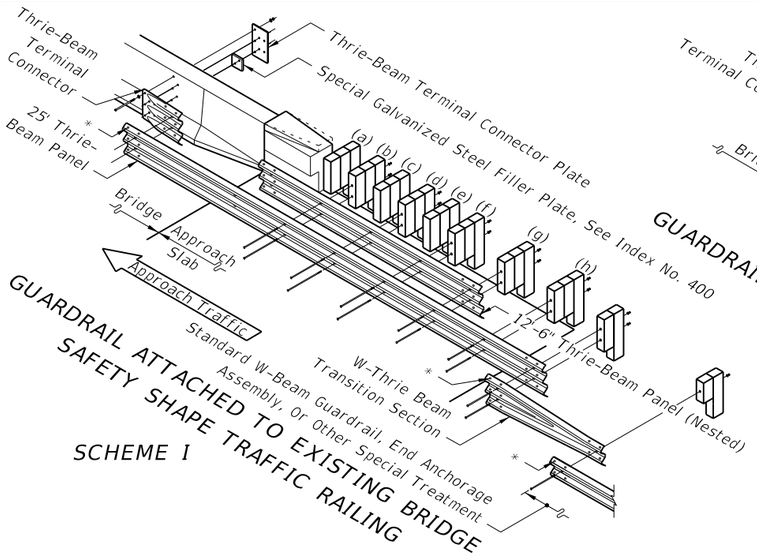

SCHEME I

GUARDRAIL ATTACHED TO EXISTING BRIDGE SAFETY SHAPE TRAFFIC RAILING

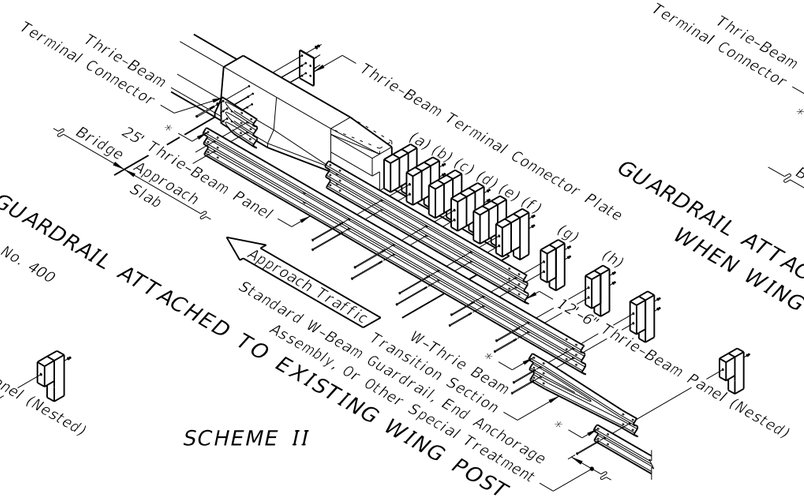

SCHEME II

GUARDRAIL ATTACHED TO EXISTING WING POST

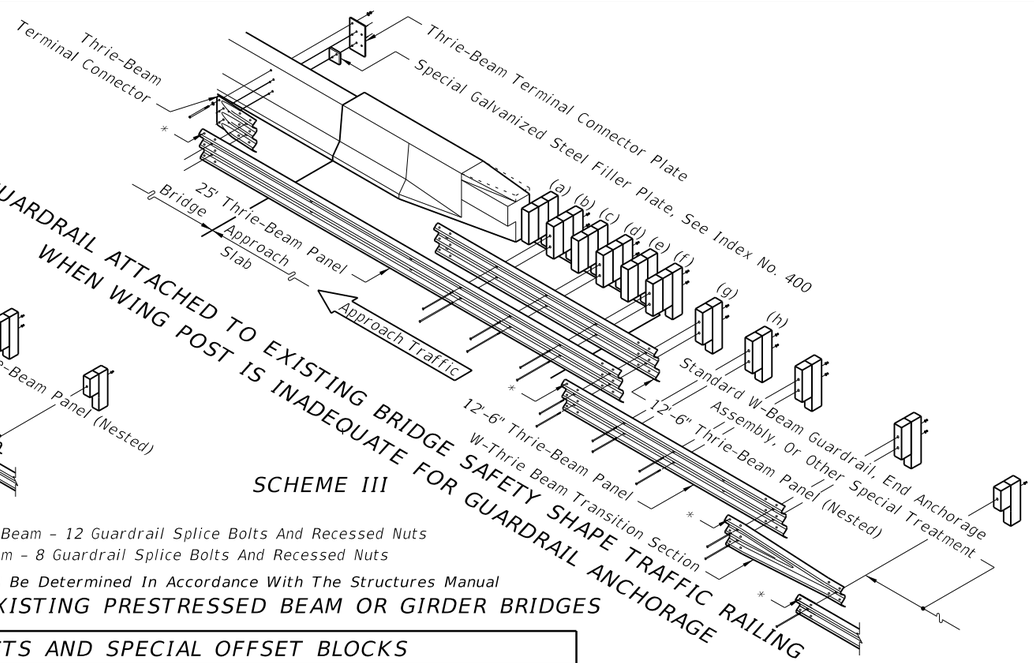

SCHEME III

GUARDRAIL ATTACHED TO EXISTING BRIDGE SAFETY SHAPE TRAFFIC RAILING WHEN WING POST IS INADEQUATE FOR GUARDRAIL ANCHORAGE

* Splice Locations: Thrie-Beam – 12 Guardrail Splice Bolts And Recessed Nuts
W-Beam – 8 Guardrail Splice Bolts And Recessed Nuts

Use Of Scheme I Shall Be Determined
In Accordance With The Structures Manual

Use Of Schemes II And III Shall Be Determined In Accordance With The Structures Manual

GUARDRAIL TRANSITION TO EXISTING FLAT SLAB BRIDGES

GUARDRAIL TRANSITIONS TO EXISTING PRESTRESSED BEAM OR GIRDER BRIDGES

APPROACH POSTS AND SPECIAL OFFSET BLOCKS

Block assemblies for special offsets can be made up of one special block plus one standard size block or of three standard size blocks field dressed to approximately equal size, with the pieces secured for relative position by 16d galvanized nails, see '16d NAIL FOR PREVENTION OF OFFSET BLOCK ROTATION' – Index 400. The nested rails shall not be bolted to the blocks and posts at posts (a), (c) and (e). The details shown are for approach slabs with internal edge dike extending beyond parapet type traffic railing termini.

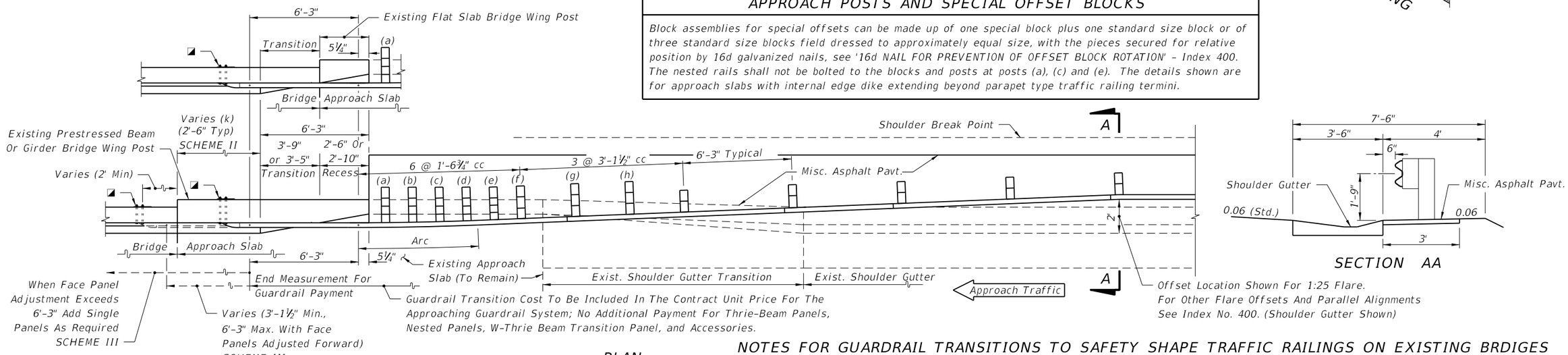

PLAN

SECTION AA

◪ 21"x12"x⅞" Thrie-Beam Terminal Connector Plate (Back-Up Plate), And ⅞"Ø x 18" Long [15" Long With 3½" Min. Thread Length For Bridge Safety Shape Railing] HS Hex Bolts And Nuts (5 Reqd.) With 2¼" OD Plain Round Washers Under Heads And Nuts. [When Attaching Guardrail To Existing Wing Posts Or Bridge Rails, Care Should Be Exercised To Avoid Damaging Conduits And Their Utilities That May Be Routed Through Wing Posts Or Bridge Rails. When Conduits And Their Utilities Are Encountered, At Least Five ⅞" HS Hex Bolts Shall Be Installed In Any Of The Seven Holes Provided In The Thrie-Beam Terminal Connector.]

NOTES FOR GUARDRAIL TRANSITIONS TO SAFETY SHAPE TRAFFIC RAILINGS ON EXISTING BRDIGES

1. When the existing wing post is to be replaced with a bridge traffic railing in accordance with the Structures Manual, the thrie-beam guardrail connection shall be in accordance with Detail J of Index No. 400.
2. When the guardrail attachment overlays the Bridge Number, Bridge Name or Date on the traffic railing, provide an aluminum sign panel with the obscured information. Attach the sign panel to the face of the traffic railing adjacent to the Thrie-Beam Terminal Connector with ½"Ø x 1" long concrete screws or expansion anchors at each corner, as approved by the Engineer. The sign panel shall be a minimum 1/16" thick and meet the requirements of Specification Section 700 with a white background and 3" tall black letters and sized appropriately to contain the information required. The cost of the sign panel shall be included in the cost of the Guardrail Bridge Anchorage Assembly.
3. When retrofitting thrie-beam guardrail to existing wing posts or existing bridge safety shape traffic railing, attachment construction to be paid for under the contract unit price for Guardrail Bridge Anchorage Assembly, EA., and shall be full compensation for bolt hole construction, terminal connector, terminal connector plate(s) and bolts, nuts and washers.

GUARDRAIL APPROACH TRANSITIONS AND CONNECTIONS FOR EXISTING FLAT SLAB, PRESTRESSED BEAM AND GIRDER BRIDGES WITH SAFETY SHAPE TRAFFIC RAILING EXTENDING LESS THAN FULL APPROACH SLAB LENGTH

LAST REVISION	REVISION	DESCRIPTION:		INDEX NO.	SHEET NO.
01/01/10			FDOT DESIGN STANDARDS 2013	402	24

GUARDRAIL TRANSITIONS AND CONNECTIONS FOR EXISTING BRIDGES

C:\d\projects\standards\roadway\00400-s\00402-24.dgn rd960rh 1:58:54 PM 6/28/2012

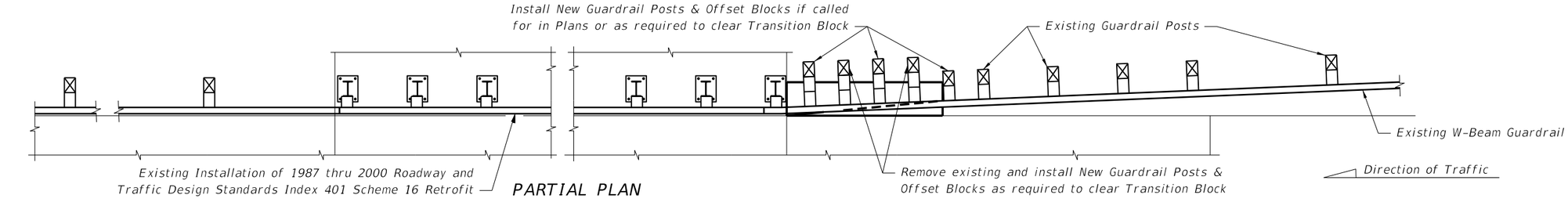

PARTIAL PLAN

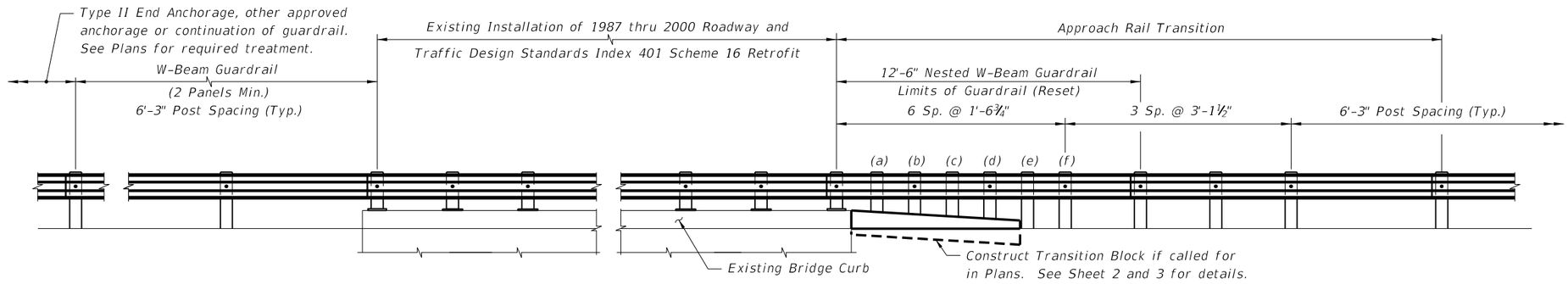

Note:
Do not bolt nested W-Beam to Posts and Offset Blocks at Posts (a), (c) & (e), (Typ.)

TRAILING END * — APPROACH END

PARTIAL ELEVATION
W-BEAM BRIDGE TRAFFIC RAILING RETROFITS

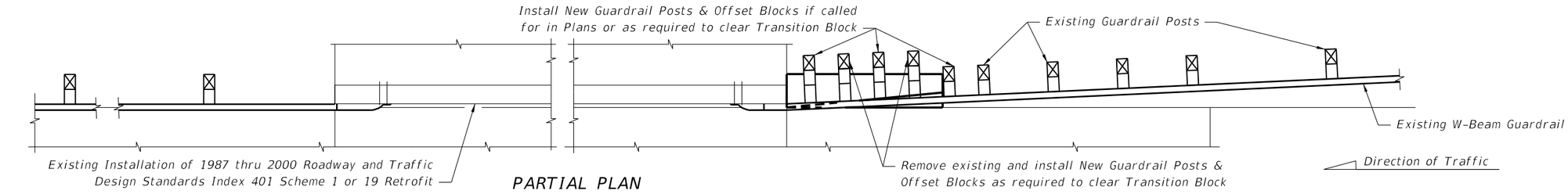

PARTIAL PLAN

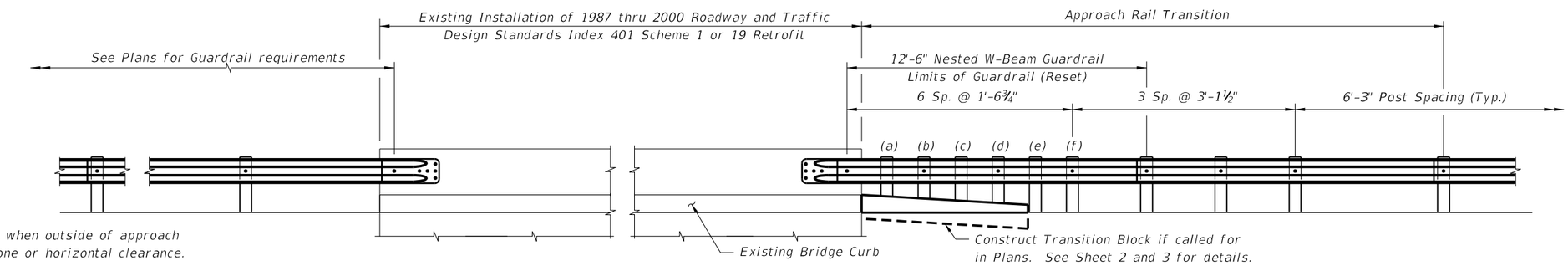

* For use when outside of approach clear zone or horizontal clearance.

TRAILING END * — APPROACH END

PARTIAL ELEVATION
VERTICAL FACE BRIDGE TRAFFIC RAILING RETROFITS

LAST REVISION	REVISION	DESCRIPTION:			INDEX NO.	SHEET NO.
07/01/05			FDOT DESIGN STANDARDS 2013	GUARDRAIL TRANSITIONS FOR EXISTING BRIDGE TRAFFIC RAILING RETROFITS	403	1

C:\d\projects\standards\roadway\00400~s\00403~01.dgn
rd960rh
1:58:57 PM
6/28/2012

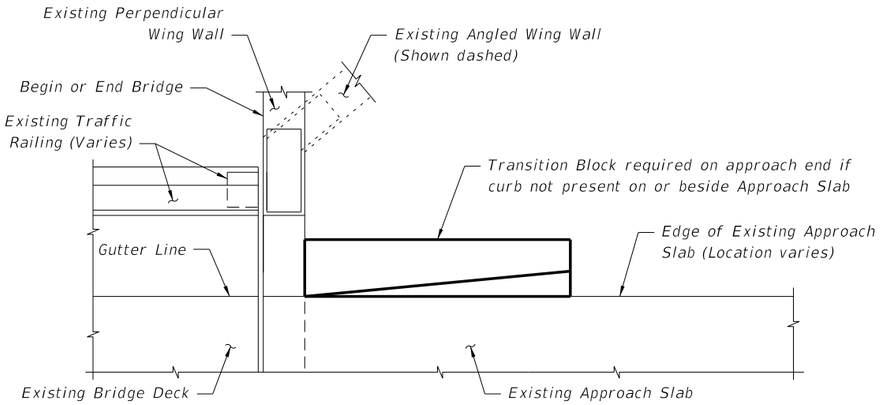

PARTIAL PLAN VIEW OF EXISTING BRIDGE WITH PERPENDICULAR OR ANGLED WING WALLS

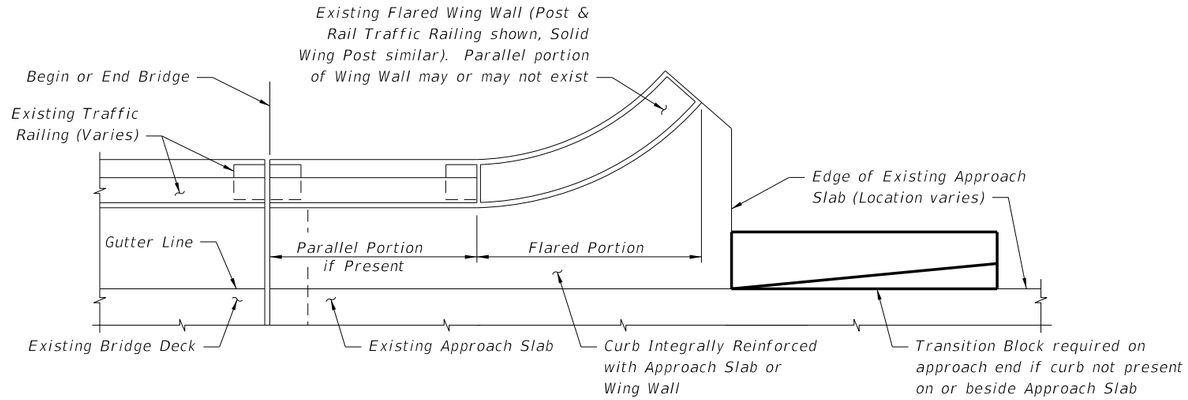

PARTIAL PLAN VIEW OF EXISTING BRIDGE WITH FLARED WING WALLS AND PARALLEL INTEGRALLY REINFORCED APPROACH SLAB CURBS (APPROACH SLAB WITH DETACHED CURBS OR SIDEWALK SIMILAR)

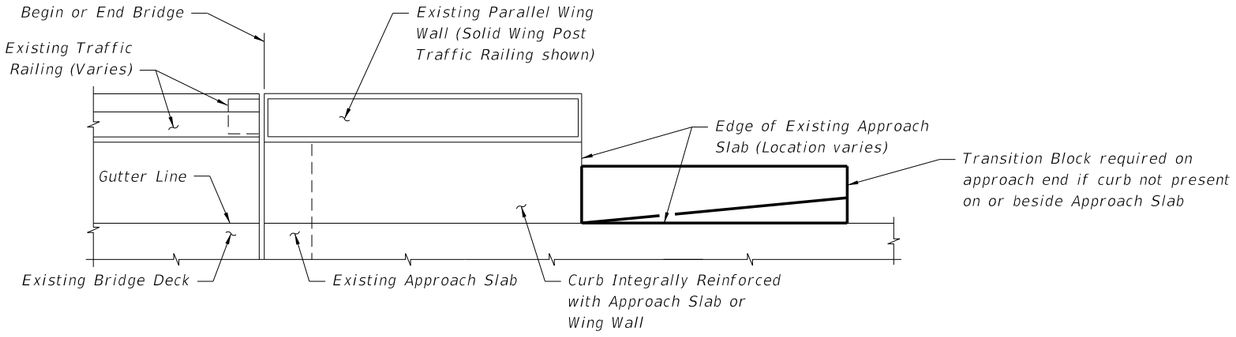

PARTIAL PLAN VIEW OF EXISTING BRIDGE WITH PARALLEL WING WALLS AND INTEGRALLY REINFORCED APPROACH SLAB CURBS (APPROACH SLAB WITH DETACHED CURBS OR SIDEWALK SIMILAR)

CROSS REFERENCE:
For Transition Block Details, Quantities and reinforcement see Sheet 3.

C:\d\projects\standards\roadway\00400-s\00403-02.dgn
rd960rh
1:58:59 PM
6/28/2012

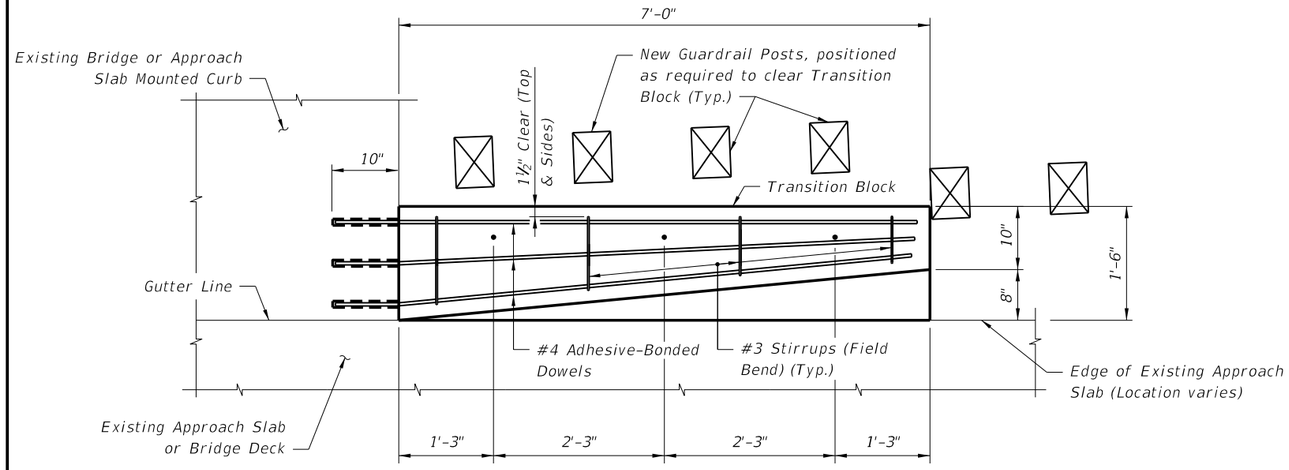

PLAN VIEW OF TRANSITION BLOCK
(GUARDRAIL NOT SHOWN FOR CLARITY)

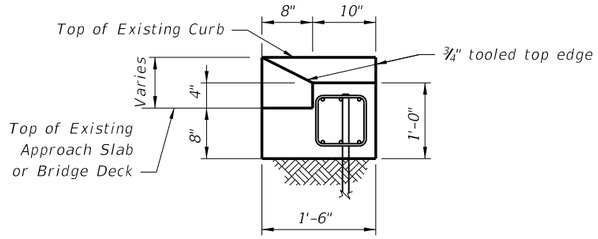

END VIEW A-A

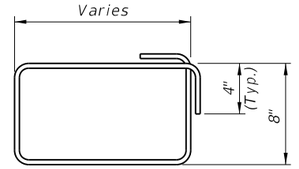

#3 STIRRUP (FIELD BEND)

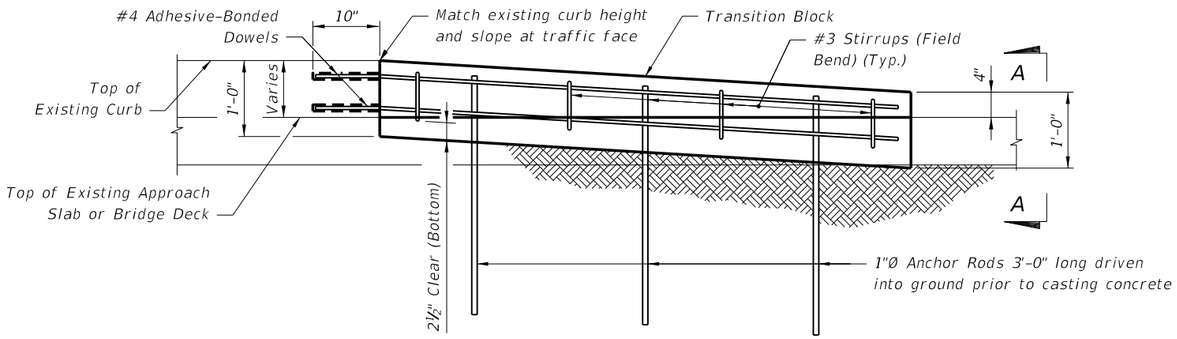

ELEVATION OF TRANSITION BLOCK
(GUARDRAIL AND POSTS NOT
SHOWN FOR CLARITY)

ESTIMATED QUANTITIES		
ITEM	UNIT	QUANTITY
Concrete Class NS	CY	0.4
Reinforcing Steel	LB	61
Guardrail (Reset)	LF	12.5

NOTES:

CONCRETE: Concrete for Transition Blocks shall be Class NS.

REINFORCING STEEL: Reinforcing steel shall be ASTM A615, Grade 60.

ANCHOR RODS: Steel Anchor Rods shall be ASTM A36, ASTM A709 Grade 36 or ASTM A615 Grade 60 hot-dip galvanized in accordance with Specification Section 962.

W BEAM GUARDRAIL: Guardrail components and installation shall be in accordance with Design Standards Index 400.

ADHESIVE-BONDED DOWELS: Adhesive Bonding Material Systems for Dowels shall comply with Specification Section 937 (Type HV) and be installed in accordance with Specification Section 416.

Adhesive Bonded Dowels are shown installed in an existing curb or sidewalk integrally reinforced with Approach Slab, Wingwall or Bridge Deck. For installations in existing detached curbs or sidewalks, install dowels in available sound concrete.

PAYMENT: Payment for Guardrail work will be made under Pay Item Guardrail (Reset) LF. Payment for Transition Block will be made under Pay Item Concrete Curb (Special), LF.

C:\d\projects\standards\roadway\00400-s\00403-03.dgn
rd960rh
1:59:01 PM
6/28/2012

REFLECTIVE BARRIER MARKER SPACING ON WALL		
Distance- Edge of Travel Lane to Barrier Wall (ft)	Spacing (Ft.)	REMARKS
< 4'	40'	1. Reflectors shall conform to Section 993 of the Standard Specifications. 2. Reflector color (white or yellow) shall conform to the color of the near edgeline. 3. The cost for reflectors shall be included in the contract unit price for barrier wall.
4' to 8'	80'	
> than 8'	none required	

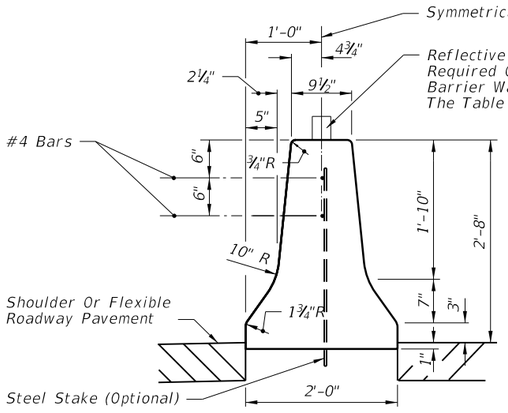

FULL WALL

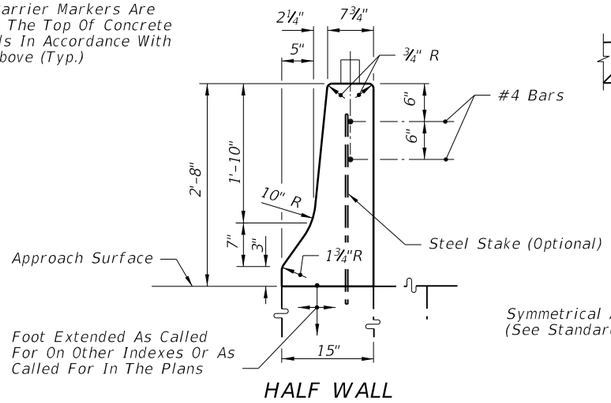

HALF WALL

For concrete barrier wall details at piers, highway lighting and guardrail connections, see other sheets of this Index.
Standard barrier to be paid for under the contract unit price for Median Concrete Barrier Wall, LF.

STANDARD BARRIER WALL SECTIONS

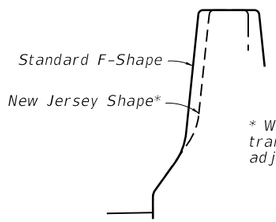

* Where standard F-Shape walls abut existing NJ Shape walls, face transitions of not less than 5' in length shall be constructed at the adjoining end of the F-Shape wall.

WALL FACE SAFETY SHAPES

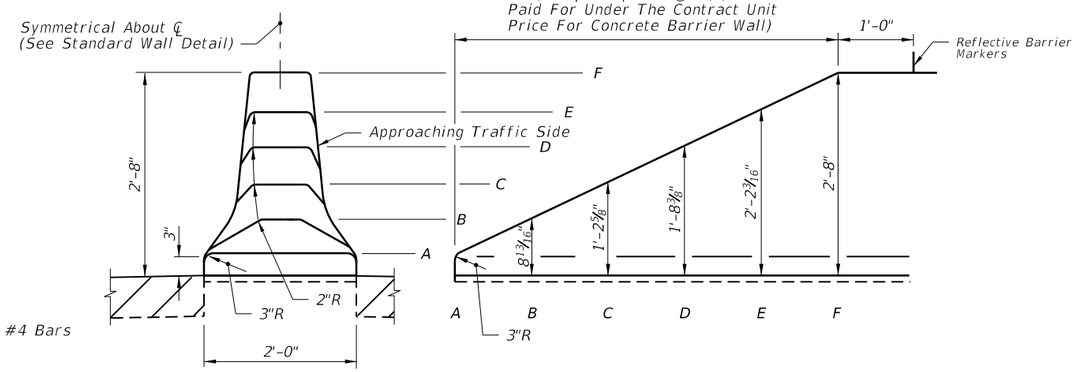

END ELEVATION

SIDE ELEVATION

TO BE USED ONLY WHERE TERMINAL LOCATED CLEAR ZONE WIDTH FROM EDGE OF THE NEAR APPROACH TRAFFIC LANE.

CONCRETE BARRIER WALL TERMINAL

DETAIL II

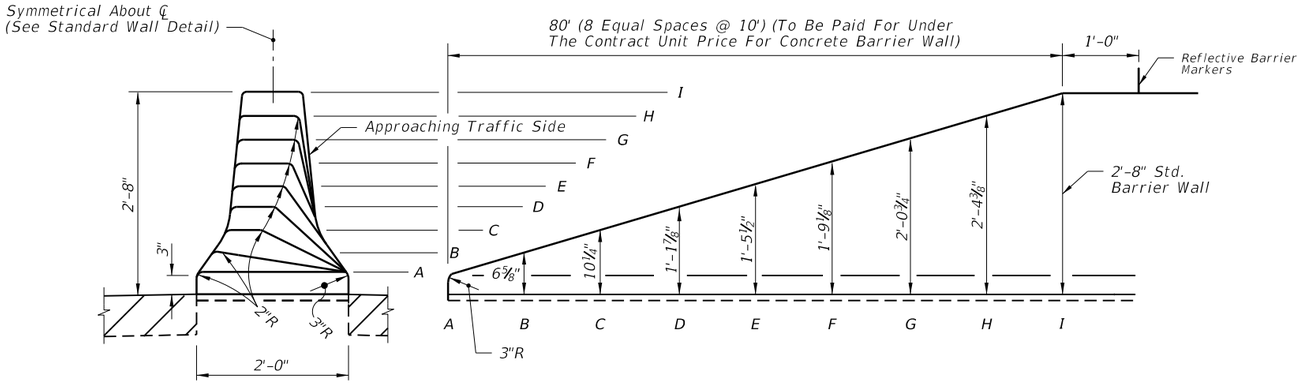

END ELEVATION

SIDE ELEVATION

DESIGN SPEED 45 MPH OR LESS
CONCRETE BARRIER WALL TERMINAL FOR NARROW MEDIAN

DETAIL III

GENERAL NOTES

1. Class II concrete shall be used for all reinforced and plain (nonreinforced) concrete barrier walls; except, in moderately and extremely aggressive environments, Class IV concrete shall be used. All reinforcing steel with undesignated size shall be #4 bars. Exposed concrete surfaces shall have a Class 3 surface finish in accordance with Section 521 of the Standard Specifications, unless other finish called for in plans. The surfaces shall have a Class 5 Applied Finished Coating in accordance with Section 400 only when called for in the plans.
2. Concrete barrier wall terminal notes for design speeds ≥ 50 mph.
   a. Terminated outside clear zone of the approach traffic with 'DETAIL II' end treatment.
   b. Terminated within a shielded location.
   c. Terminal protection by the use of a crash cushion system.
   d. Terminated in conjunction with a suitably designed transition to another barrier.
3. Expansion joints in wall required only at bridge ends and/or at locations where wall is an integral part of existing or proposed concrete slab; wall joints are to match an existing or proposed expansion joint.
4. When the barrier is installed adjacent to the pavement the top 12" of the subgrade shall be compacted to at least 98% of the maximum density determined by FM 1-T 180, Method D.
5. For cast-in-place barrier wall segments constructed with the slip form method, score 3/8" deep crack control V-Grooves while the concrete is still plastic and mold them when walls are constructed with the stationary form method. All 3/8" deep V-Grooves shall be spaced at 20' intervals, the end of the side face grooves shall be in line with the ends of the top face groove and the long dimension of all grooves shall align at 90 degrees to the longitudinal axis of the wall. When wall segments are less than 40' in length, space the V-Groove equally between open joints. Dowel transverse construction joints for abutting segments less than 40' (See Detail B).
6. Precast construction is allowed as an alternate to cast-in-place construction.
   a. Wall segments <40' in length shall be joined by a transverse joint in accordance with Details C & D on Sheet 2. The minimum segment length is 20'.
   b. Bedding of the precast sections shall be facilitated by the use of sand-cement grout or equal method to assure uniform bearing.
   c. Reinforcement may be required for handling stresses.
7. On roadways designated for reverse laning all downstream, ends that are not shielded or outside the clear zone shall be marked by Type 3 Object Markers.
8. Cost of reinforcing steel and reflective barrier markers shall be included in the contract unit price for concrete barrier wall. See individual details for pay item information.
9. For barrier wall inlet details see Indexes Nos. 217, 218 and 219.
10. Concrete barrier wall with New Jersey Safety Shape may not be substituted for the Standard F Shape Barrier.

C:\d\projects\standards\roadway\00400-s\00410-01.dgn
rd960rh
1:59:03 PM
6/28/2012

LAST REVISION	REVISION	DESCRIPTION:			INDEX NO.	SHEET NO.
01/01/12			FDOT DESIGN STANDARDS 2013	CONCRETE BARRIER WALL	410	1

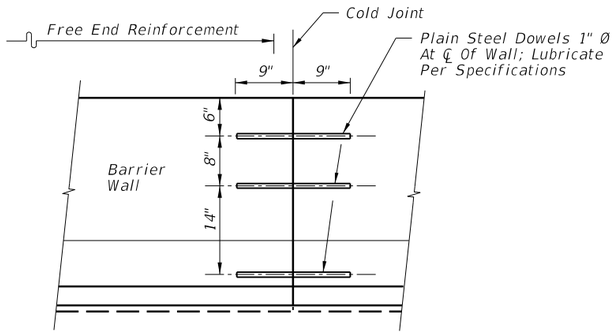

DOWELED TRANSVERSE CONSTRUCTION JOINT WHEN ABUTTING SEGMENT(S) LESS THAN 40' IN LENGTH

DETAIL B

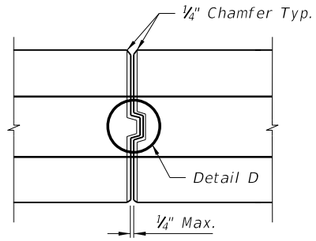

TOP VIEW

PRECAST BARRIER TRANSVERSE JOINTS

DETAIL C

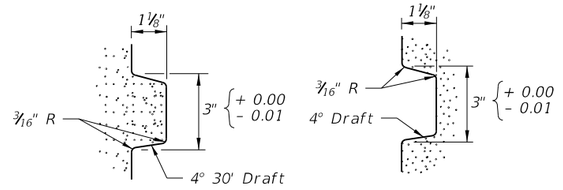

TOP VIEW

STRAIGHT TONGUE AND GROOVE

DETAIL D

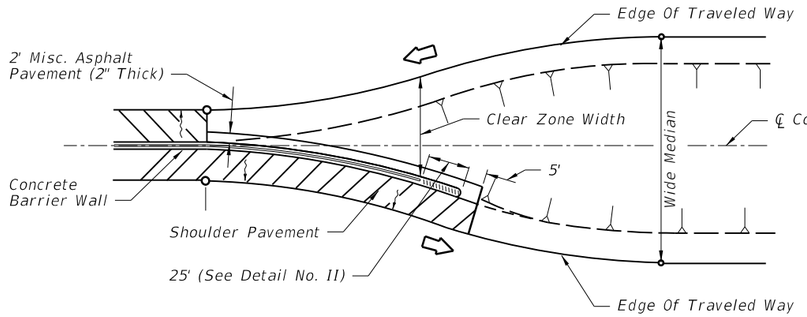

CONCRETE BARRIER WALL TRANSITION BETWEEN WIDE AND NARROW MEDIANS WHEN BARRIER WALL END LOCATED OUTSIDE APPROACH CLEAR ZONE OR HORIZONTAL CLEARANCE

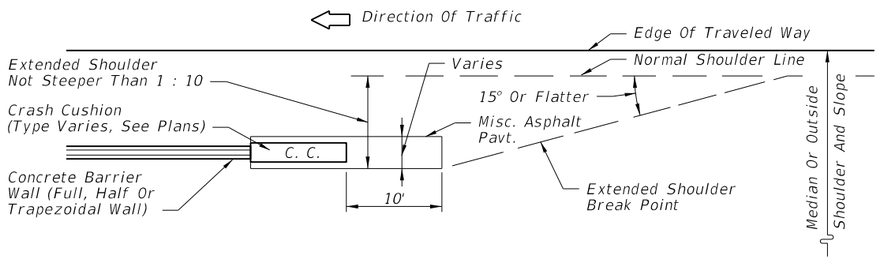

SHOULDER TREATMENT WHEN CRASH CUSHIONS SHIELDING CONCRETE BARRIER WALL END LOCATED INSIDE APPROACH CLEAR ZONE OR HORIZONTAL CLEARANCE

DETAIL A

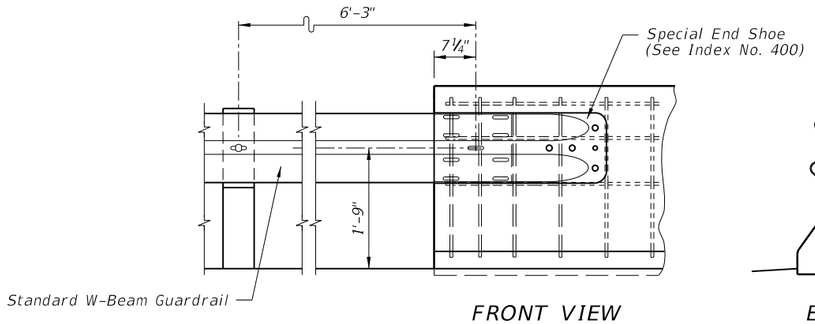

FRONT VIEW

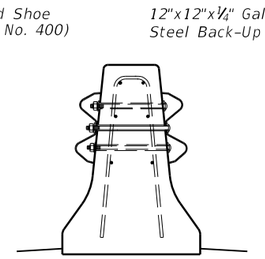

END VIEW

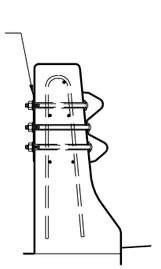

END VIEW

NOTES

1. End of wall flush mounted connections are not applicable to two-lane two-way facilities. See Sheets 20, 24, and 25 for trailing end connections on two-lane two-way facilities and for approach guardrail connections.

2. Trailing guardrail connections to double face safety shaped walls will be under one of the following traffic conditions and mounting methods:
   (a) One-way traffic trailing condition one side only - flush mount with flat steel back-up plate on back side.
   (b) One-way traffic trailing condition both sides - flush mount both sides.
   (c) For trailing condition one side and approach traffic condition opposite side - see "Median Barrier Wall" mounting, Sheet 25.

W-BEAM GUARDRAIL CONNECTION TO CONCRETE BARRIER WALL TRAILING ENDS

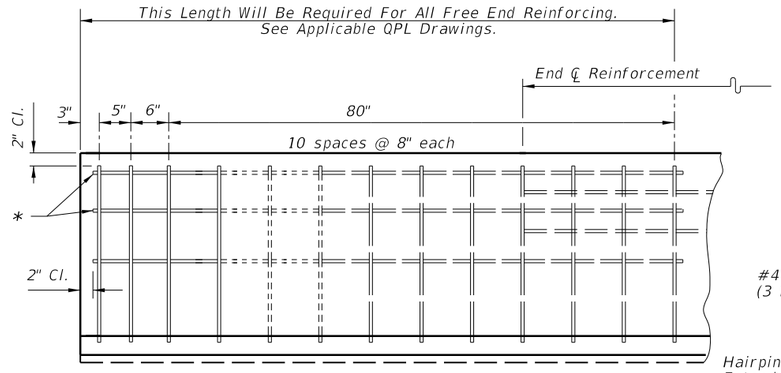

SIDE VIEW

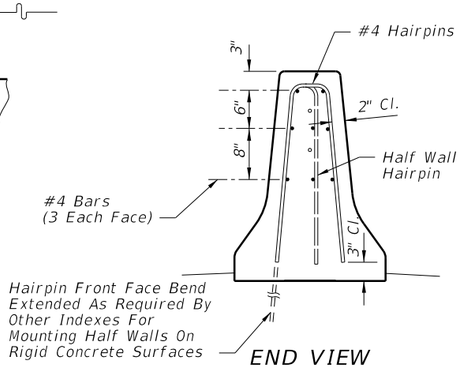

END VIEW

* Note: Free end reinforcement required for nonreinforced walls at the following locations: All exposed ends; abutting ends of true joints; ends with guardrail connections; ends with redirective crash cushion connections; and, ends connecting to bridge traffic rails or other rigid barrier walls.

FREE END REINFORCEMENT

C:\d\projects\standards\roadway\00400-s\00410-02.dgn
rd960rh
1:59:06 PM
6/28/2012

LAST REVISION	REVISION	DESCRIPTION:			INDEX NO.	SHEET NO.
07/01/05			FDOT DESIGN STANDARDS 2013	CONCRETE BARRIER WALL	410	2

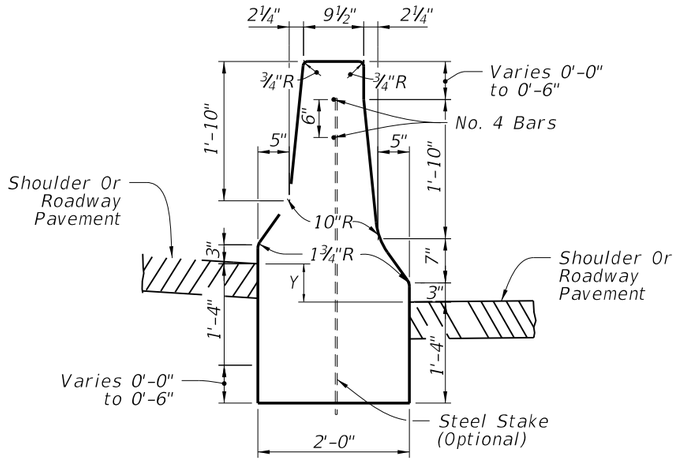

F-SHAPE MEDIAN BARRIER
WHEN Y IS LESS THAN OR EQUAL TO 6 INCHES

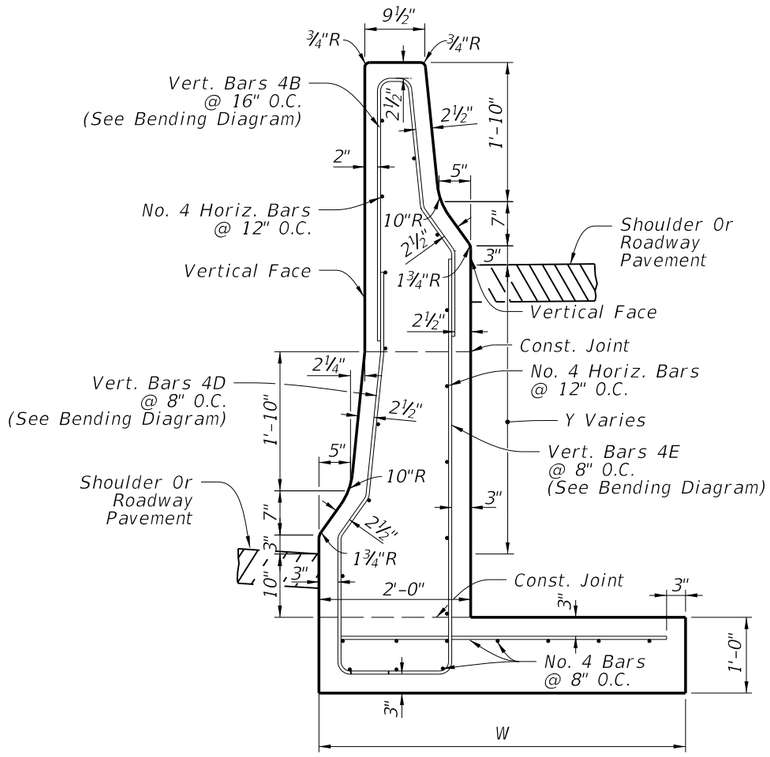

CANTILEVER WALL
SUPERELEVATED SECTION

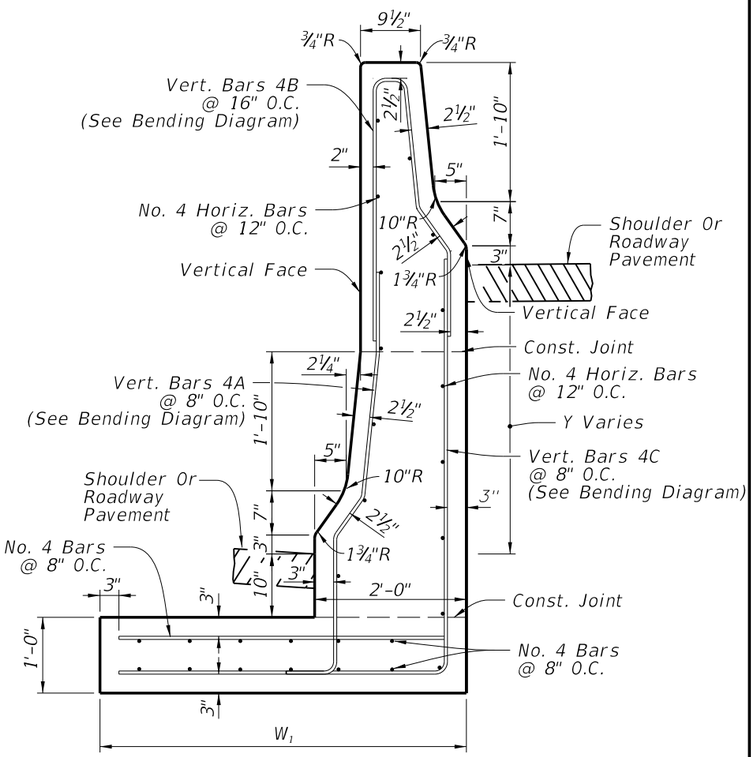

L-WALL
SUPERELEVATED SECTION

BENDING DIAGRAMS

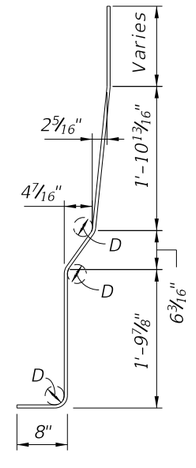

L-WALL
BAR 4A

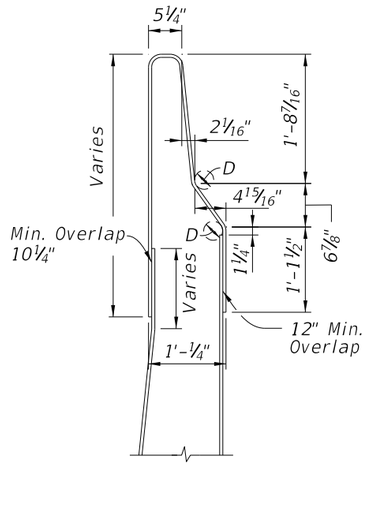

L-WALL & CANTILEVER WALL
BAR 4B

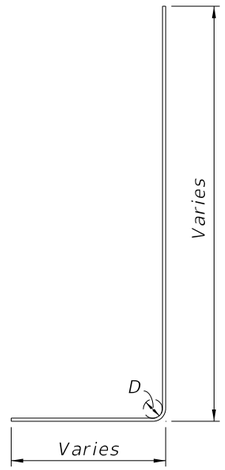

L-WALL
BAR 4C

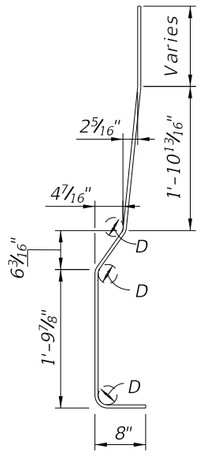

CANTILEVER WALL
BAR 4D

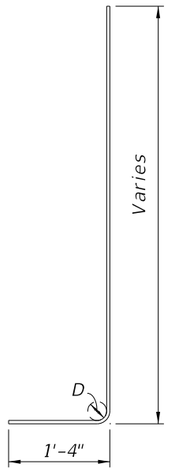

CANTILEVER WALL
BAR 4E

Design Criteria:

This barrier wall has been structurally evaluated to be equivalent or greater in strength to other safety shapes which have been crash tested to NCHRP Report 350 TL-4 criteria.

Unless the plans stipulate a specific wall type, either the Cantilever wall or the "L" wall may be constructed at the Contractor's option.

Cost of the footing to be included in the contract unit price for Median Concrete Barrier Wall, LF.

Cantilever Wall	Height Y	1'-0"	1'-6"	2'-0"	2'-6"	3'-0"	3'-6"	4'-0"
	Width W	5'-0"	5'-3"	5'-6"	5'-9"	6'-0"	6'-3"	6'-6"
Min. Segment Wall Length		39'	35'		29'	26'	24'	22'

"L" Wall	Height Y		1'-6"	2'-0"	2'-6"	3'-0"	3'-6"	4'-0"
	Width W_1	5'-0"	5'-3"	5'-6"	5'-9"		6'-6"	7'-0"
Min. Segment Wall Length		46'	44'	42'	41'	39'	36'	33'

MEDIAN BARRIER WALL FOR SUPERELEVATED SECTIONS OR FOR VARIABLE ROADWAY PROFILE GRADES

LAST REVISION	REVISION	DESCRIPTION:		FDOT DESIGN STANDARDS 2013	CONCRETE BARRIER WALL	INDEX NO.	SHEET NO.
01/01/11						410	3

6/28/2012 1:59:08 PM rd960rh C:\d\projects\standards\roadway\00400-s\00410-03of25.dgn

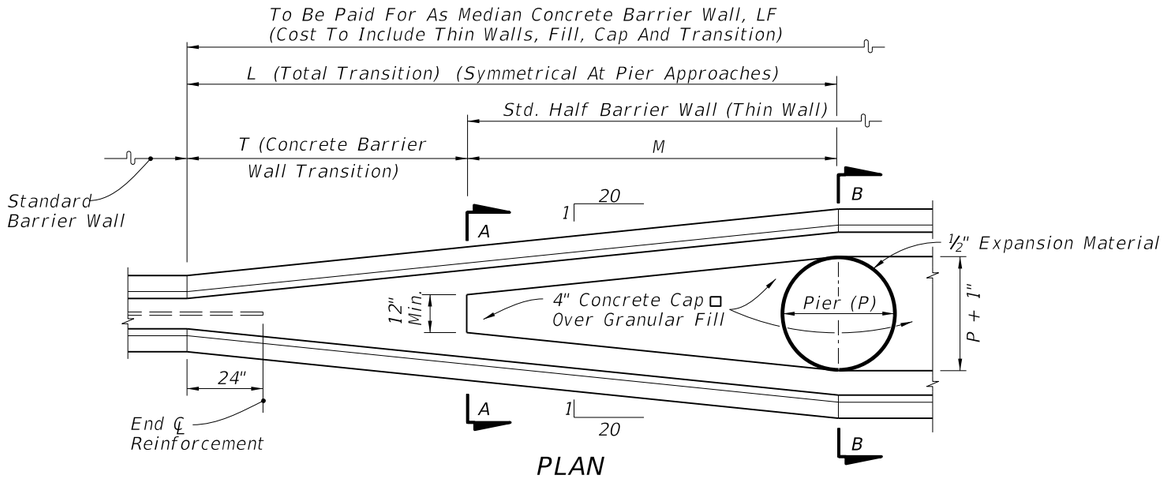

PLAN

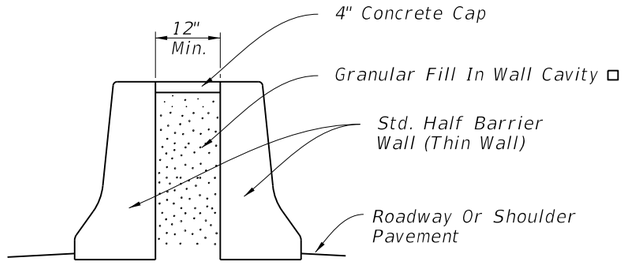

SECTION AA

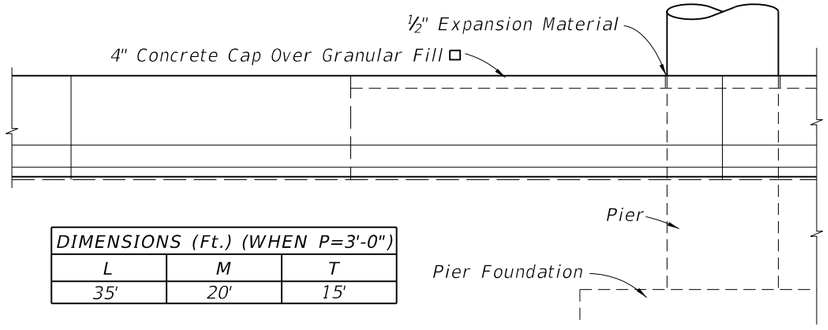

DIMENSIONS (Ft.) (WHEN P=3'-0")		
L	M	T
35'	20'	15'

ELEVATION

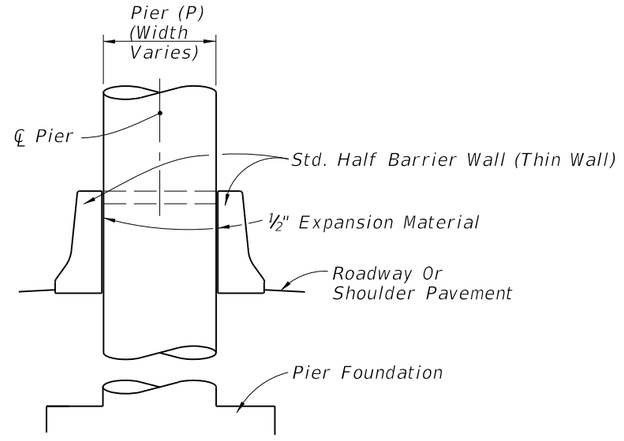

SECTION BB
BRIDGE PIERS

□ Fill To Be Free Of Deleterious And Cementitious Material

CONCRETE MEDIAN BARRIER WALL TRANSITIONS AT BRIDGE PIERS WHEN DESIGN SPEED < 45 MPH

LAST REVISION	REVISION	DESCRIPTION:				
07/01/07			FDOT DESIGN STANDARDS 2013	CONCRETE BARRIER WALL	INDEX NO. 410	SHEET NO. 4

6/28/2012 1:59:10 PM rd960rh C:\d\projects\standards\roadway\00400-s\00410-04of25.dgn

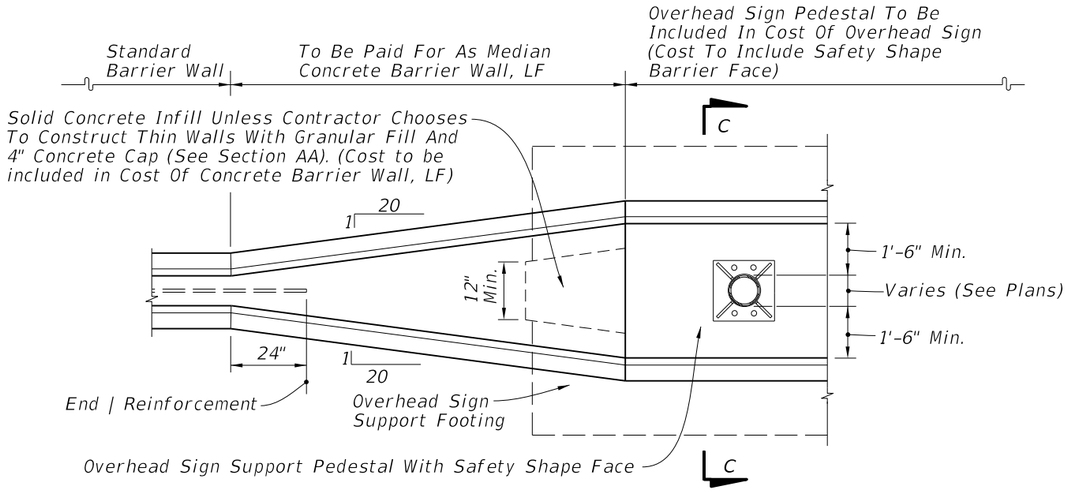

PLAN

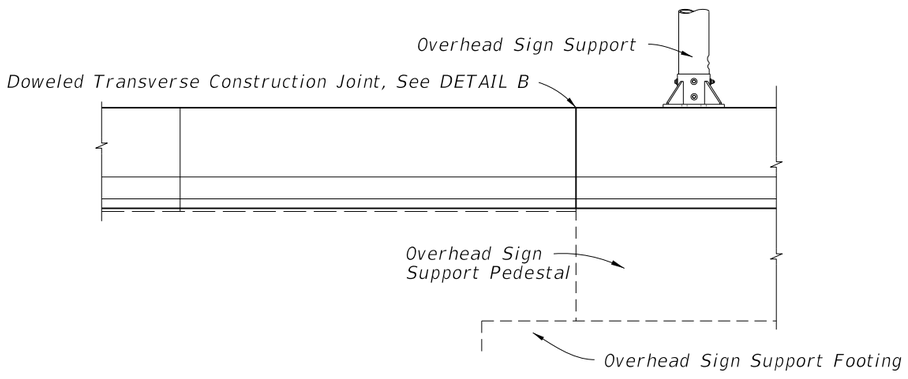

ELEVATION

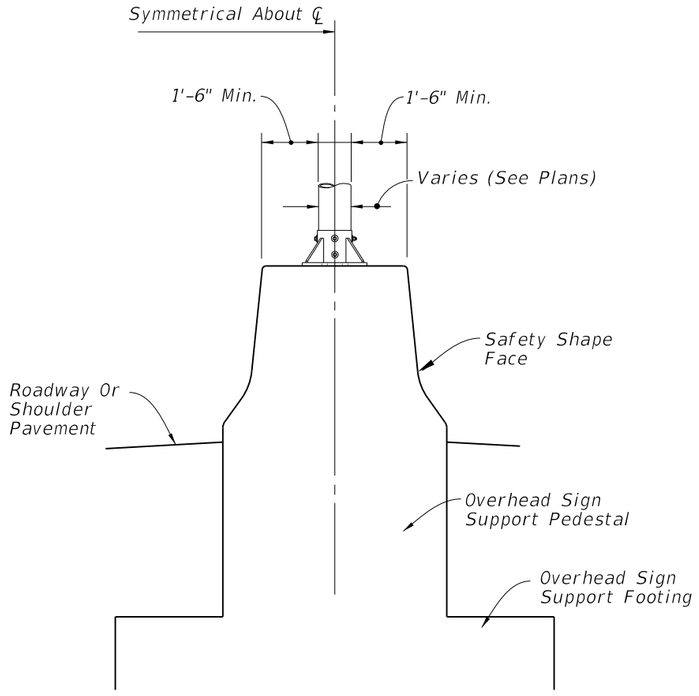

SECTION CC

CONCRETE MEDIAN BARRIER WALL TRANSITIONS AT OVERHEAD SIGN SUPPORTS WHEN DESIGN SPEED < 45 MPH

LAST REVISION	REVISION	DESCRIPTION:		FDOT DESIGN STANDARDS 2013	CONCRETE BARRIER WALL	INDEX NO.	SHEET NO.
07/01/10						410	5

6/28/2012 1:59:13 PM rd960rh C:\d\projects\standards\roadway\00400-s\00410-05of25.dgn

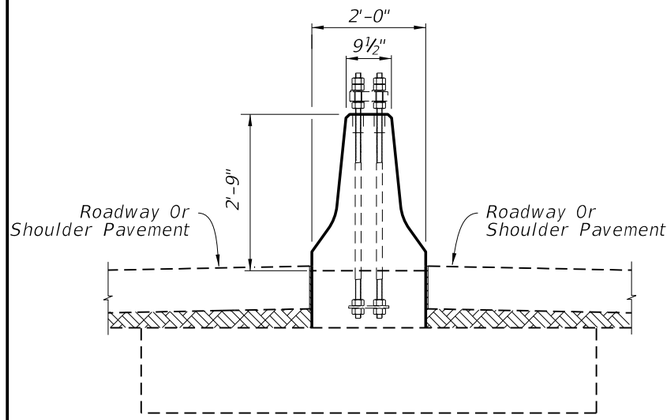

END VIEW

SPREAD FOOTING OPTION

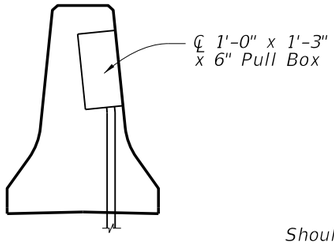

TRANSVERSE SECTION

INSTALLATION

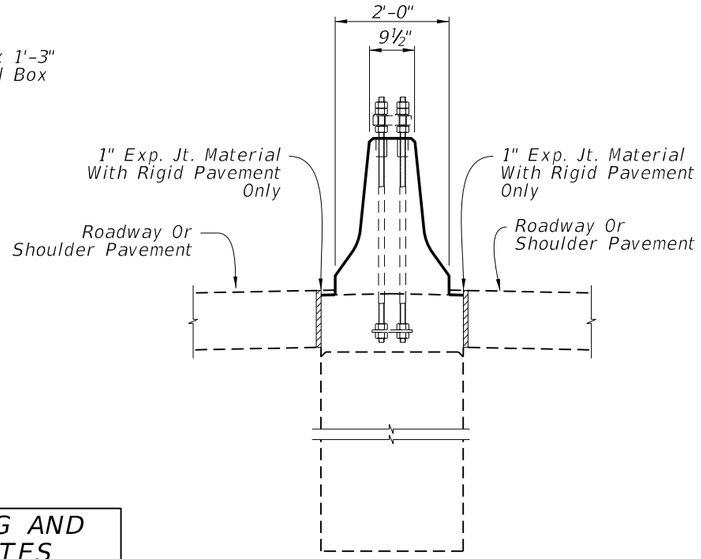

END VIEW

CYLINDRICAL OPTION

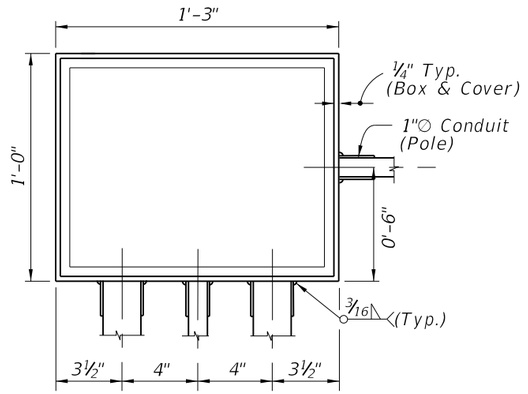

FRONT VIEW

PULL BOX

SPREAD FOOTING AND CYLINDRICAL NOTES

The Reinforcement Details And Dimensions For Both The Spread Footing And Cylindrical Foundations Can Be Found In Index 17515.

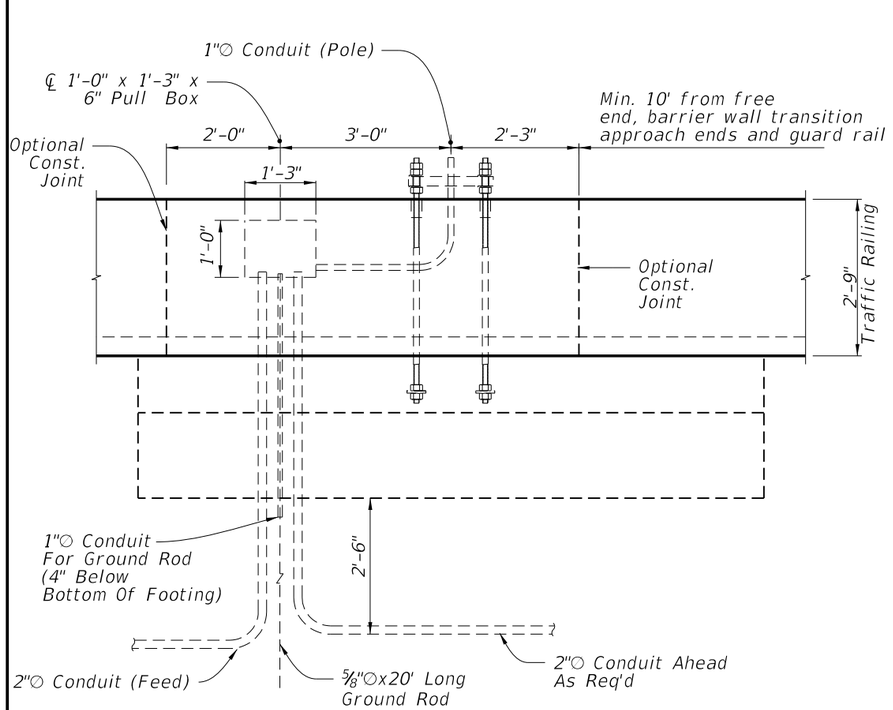

ELEVATION

SPREAD FOOTING OPTION

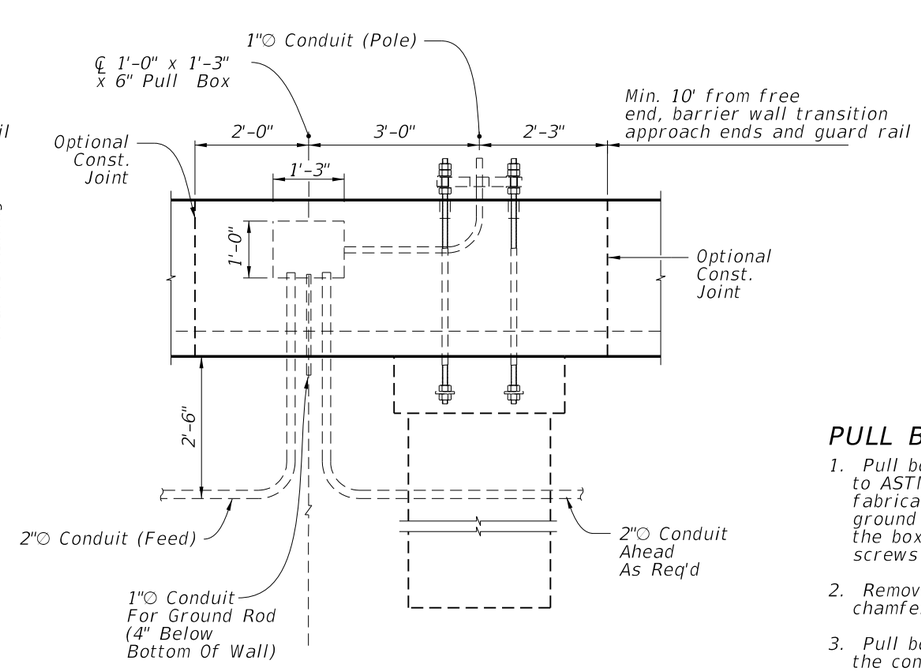

ELEVATION

CYLINDRICAL OPTION

LIGHT POLE MOUNTING IN MEDIAN BARRIER WALL

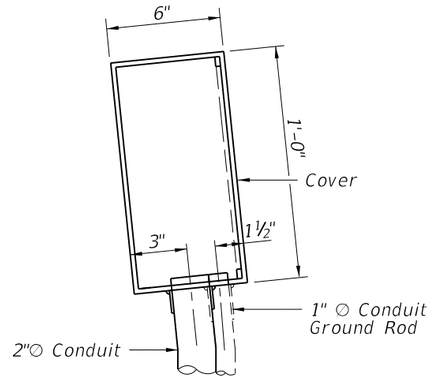

SIDE VIEW

PULL BOX

PULL BOX NOTES

1. Pull boxes are to be fabricated from steel conforming to ASTM A36 and be hot-dip galvanized after fabrication. All seams shall be continuously welded and ground smooth. A neoprene gasket shall be attached to the box to provide a watertight cover. The cover screws shall be fully galvanized.

2. Remove excess concrete while green and hand form chamfers.

3. Pull box complete and conduit risers are incidental to the construction and cost of the barrier wall; there is to be no separate compensation for the box, risers or installation unless specifically called for in the plans.

PULL BOX - ELECTRICAL

C:\d\projects\standards\roadway\00400-s\00410-06of25.dgn
rd960rh
1:59:15 PM
6/28/2012

LAST REVISION	REVISION	DESCRIPTION:			INDEX NO.	SHEET NO.
07/01/09			FDOT DESIGN STANDARDS 2013	CONCRETE BARRIER WALL	410	6

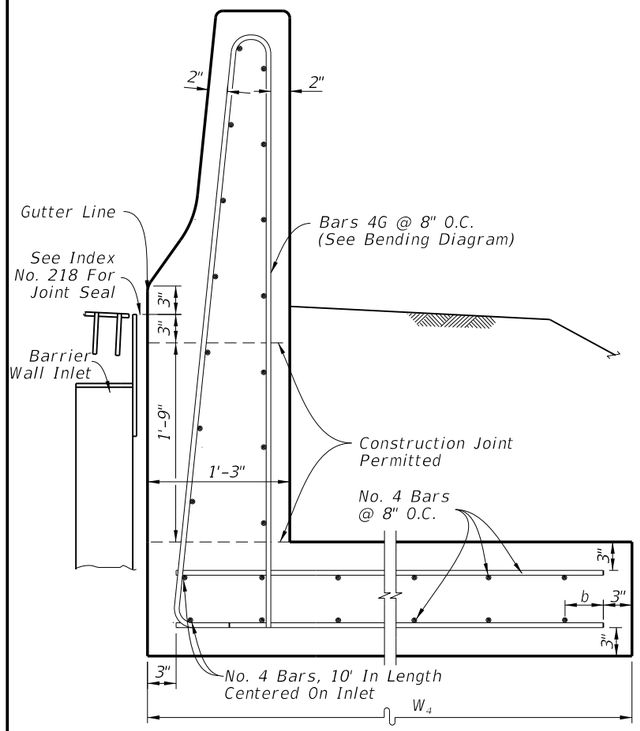

REINFORCING STEEL MODIFICATIONS
AT BARRIER WALL INLETS (INDEX NO. 218)

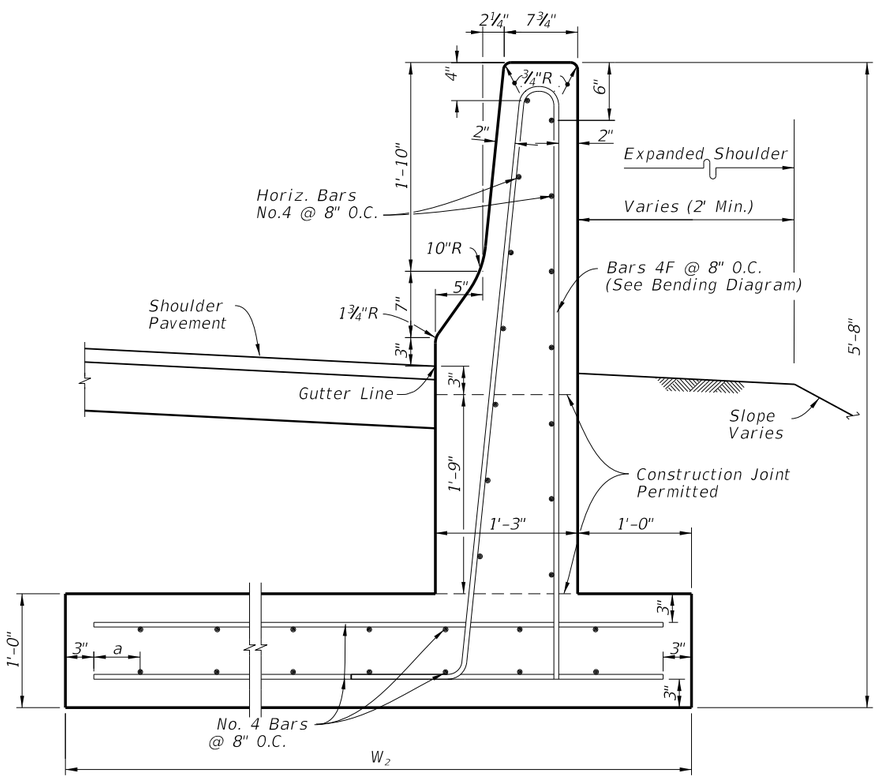

NOTE: All longitudinal reinforcement #4 bars.

CANTILEVER WALL

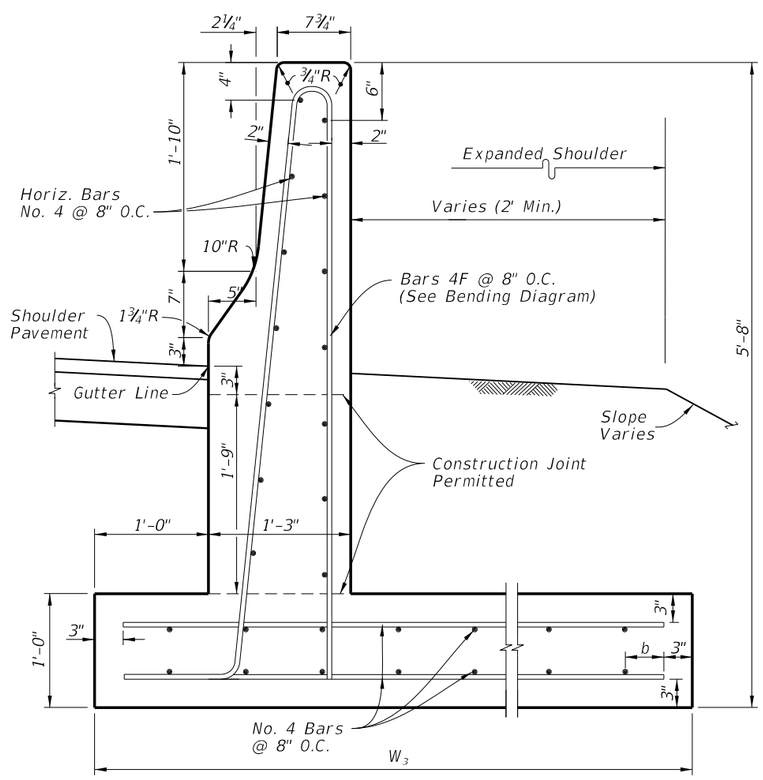

NOTE: All longitudinal reinforcement #4 bars.

L-WALL

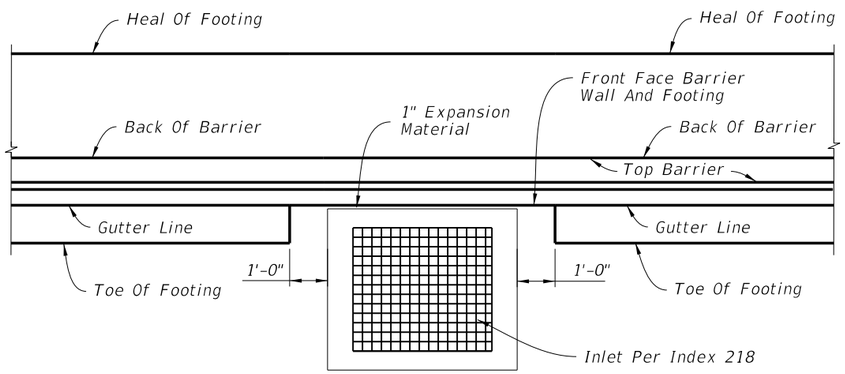

BARRIER WALL FOOTING
TRANSITION AT INLETS
PLAN VIEW

GENERAL NOTES:

1. Reduce the vertical steel spacing to 4 inches O.C. a distance of 4 feet each side of all cold joints.
2. This barrier wall has been structurally evaluated to be equivalent or greater in strength to other safety shapes which have been crash tested to NCHRP Report 350 TL-4 criteria.
3. Wall to be paid for under the contract unit price for Shoulder Concrete Barrier Wall (Rigid-Shoulder), LF.

DIMENSIONS AND QUANTITIES

CANTILEVER WALL					L-WALL					
Length* Of Barrier Wall (LF)	W_2 (LF)	a	Class II Conc. CY Per LF	Rein. Steel Lbs. Per LF	Length* Of Barrier Wall	W_3 (LF)	W_4 (LF)	b	Class II Conc. CY Per LF	Rein. Steel Lbs. Per LF
≥ 65'	3'-3"	5"	0.30	31	≥ 60'	3'-6"	2'-6"	7"	0.31	32
57' to 64'	3'-9"	3"	0.32	33	50' to 59'	4'-0"	3'-0"	5"	0.33	34
50' to 56'	4'-3"	3"	0.33	35	40' to 49'	4'-9"	3'-9"	6"	0.35	37
41' to 49'	5'-0"	7"	0.36	38	35' to 39'	5'-3"	4'-3"	4"	0.37	39
36' to 40'	5'-6"	5"	0.38	40	30' to 34'	5'-9"	4'-9"	2"	0.39	42
28' to 35'	6'-6"	3"	0.42	44	25' to 29'	6'-6"	5'-6"	3"	0.42	44
25' to 27'	7'-0"	7"	0.44	46	20' to 24'	7'-6"	6'-6"	2"	0.45	49

Quantities shown are for information only. For method of payment see payment note.
Barrier wall inlets (Index 218) shall be isolated from the barrier wall stem and footing by 1" expansion material.
* All walls may be made up of segments of 20' or more in length provided the segments are joined by a transverse joint in accordance with Detail B. Segments shall have dimensions same as walls above.

REINFORCED CONCRETE BARRIER WALL (SHOULDER)

LAST REVISION	REVISION	DESCRIPTION:		FDOT DESIGN STANDARDS 2013	CONCRETE BARRIER WALL	INDEX NO.	SHEET NO.
01/01/11						410	7

C:\d\projects\standards\roadway\00400-s\00410-07of25.dgn
rd960rh
1:59:17 PM
6/28/2012

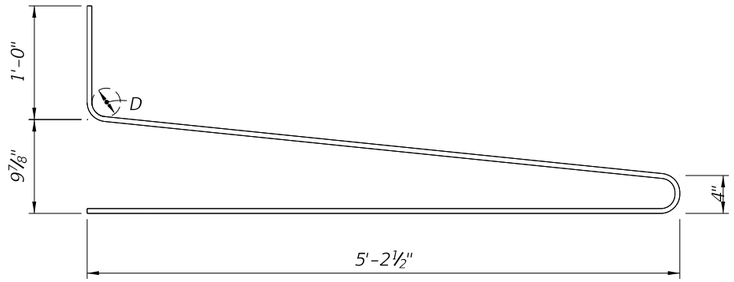

BAR 4F

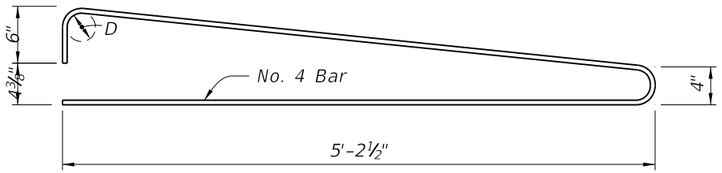

BAR 4G

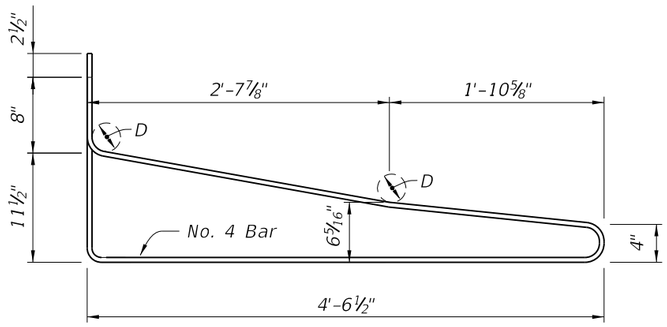

BAR 4H

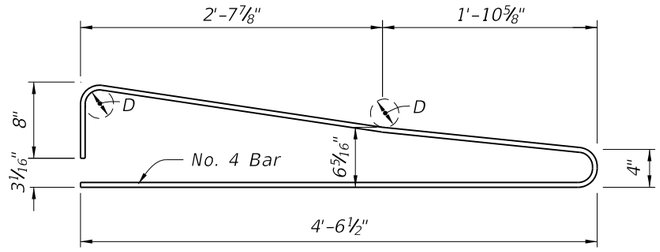

For Use In Areas Where Obstructions
Require Localized Omission Of Toe

BAR 4J

BENDING DIAGRAMS

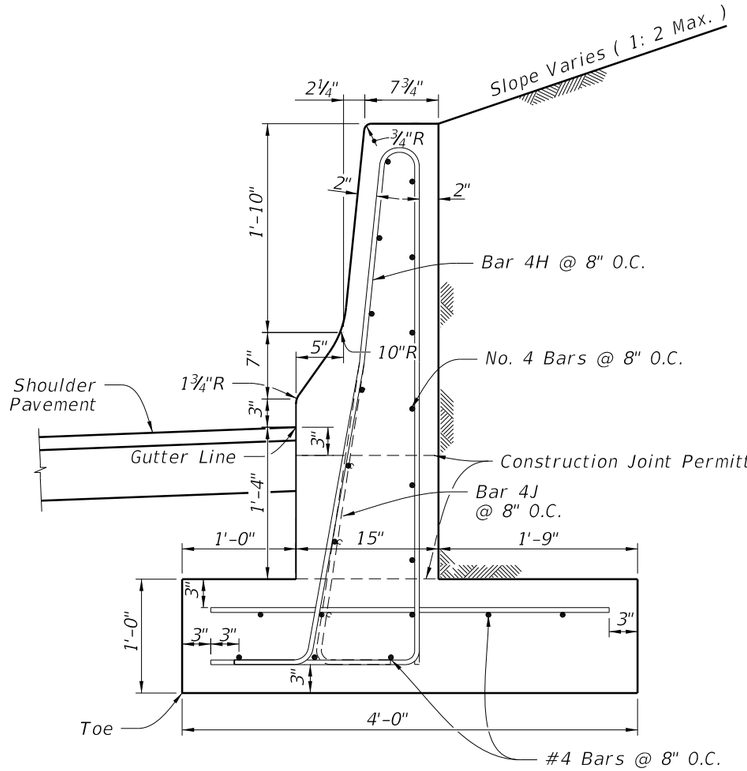

Note: All longitudinal reinforcement No. 4 bars.
Minimum segment length for this wall is 20 feet.
Wall to be paid for under the contract unit price
for Shoulder Concrete Barrier Wall (Rigid-Retaining), LF.

QUANTITIES: Class II Concrete 0.29 CY/LF
Reinforcing Steel (Bar 4H) 28.6 LBS/LF
Reinforcing Steel (Bar 4J) 26.8 LBS/LF

REINFORCED CONCRETE BARRIER WALL (RETAINING)

C:\d\projects\standards\roadway\00400-s\00410-08of25.dgn
rd960rh
1:59:19 PM
6/28/2012

LAST REVISION	REVISION	DESCRIPTION:		FDOT DESIGN STANDARDS 2013	CONCRETE BARRIER WALL	INDEX NO.	SHEET NO.
01/01/11						410	8

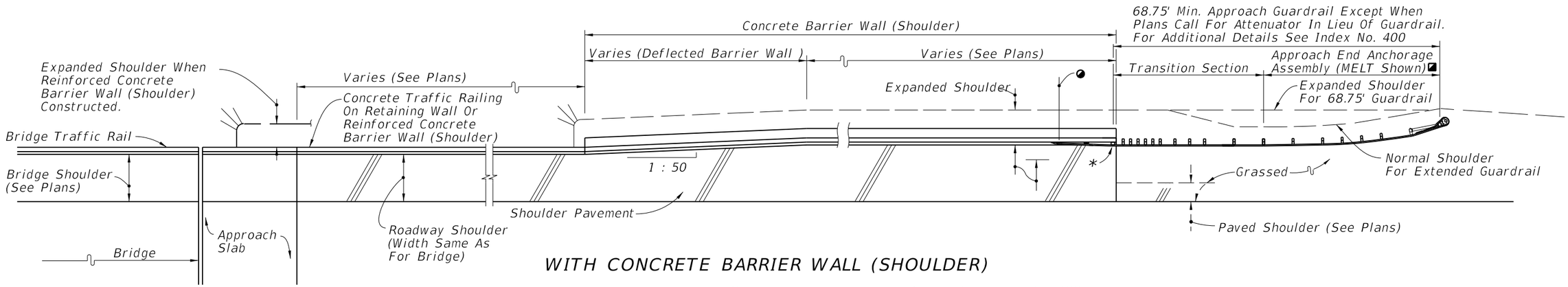

WITH CONCRETE BARRIER WALL (SHOULDER)

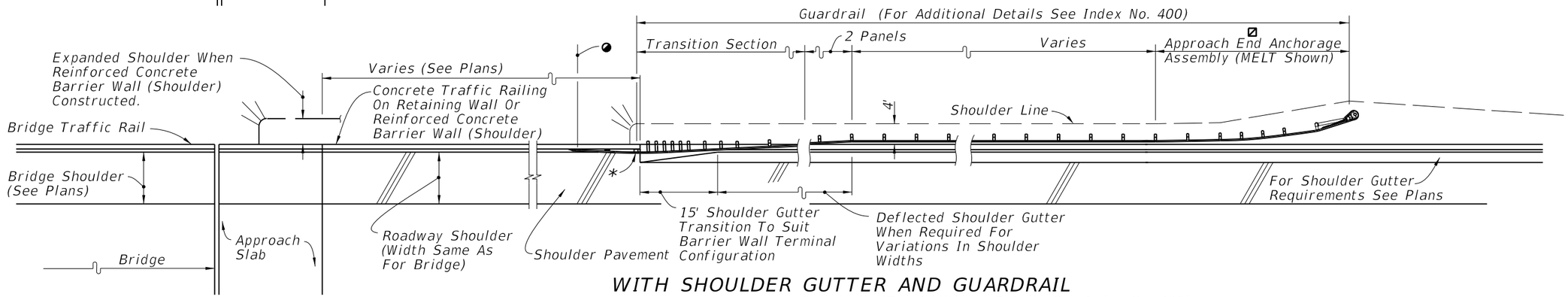

WITH SHOULDER GUTTER AND GUARDRAIL

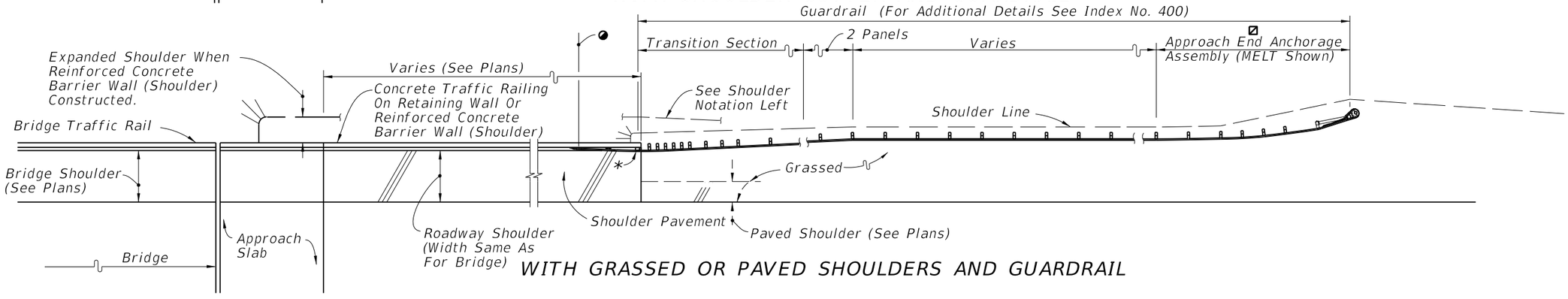

WITH GRASSED OR PAVED SHOULDERS AND GUARDRAIL

◪ *To be deleted on trailing ends except for 2-lane 2-way facilities. The tangent guardrail shall be anchored by End Anchorage Type II, Index No. 400.*

◪ *To be deleted on trailing ends except for 2-lane 2-way facilities.*

◕ *End measurement for guardrail payment when guardrail connected to shoulder barrier walls. See Index No. 400, Detail J for end measurement when guardrail connected to concrete traffic rails constructed with approach slab or on retaining walls.*

△ *Views show approach roadside barriers when length of need exceeds the length of either retaining walls with concrete traffic railings* or Reinforced Concrete Barrier Wall (Shoulder) on shoulders. When either of these rigid barriers alone satisfies the approach length of need, the wall ends shall be shielded by crash cushions, or, by guardrail the same as for bridge traffic rails, as detailed in Index No. 400. See other flagged notes for trailing end treatments. Miscellaneous asphalt paving under guardrail not shown.*

* *Guardrail connection to concrete traffic railings on retaining walls shall be in accordance with the Structures Design Office Standard Drawings and the plans. Approach guardrail connections to shoulder concrete barrier walls shall be in accordance with the details shown on Sheets 2, 24 and 25 of this Index and Index No. 400, Detail J.*

EITHER REINFORCED CONCRETE BARRIER WALL (SHOULDER) OR RETAINING WALL WITH CONCRETE TRAFFIC RAILING △

CONCRETE BARRIER WALLS ON APPROACHES TO BRIDGES

LAST REVISION	REVISION	DESCRIPTION:				
00			FDOT DESIGN STANDARDS 2013	CONCRETE BARRIER WALL	INDEX NO. 410	SHEET NO. 9

C:\d\projects\standards\roadway\00400-s\00410-09of25.dgn
rd960rh
1:59:21 PM
6/28/2012

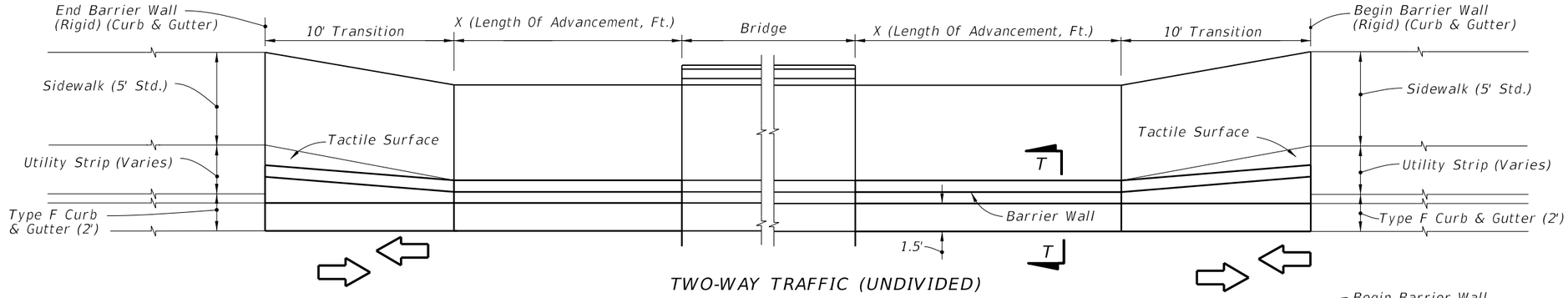

TWO-WAY TRAFFIC (UNDIVIDED)

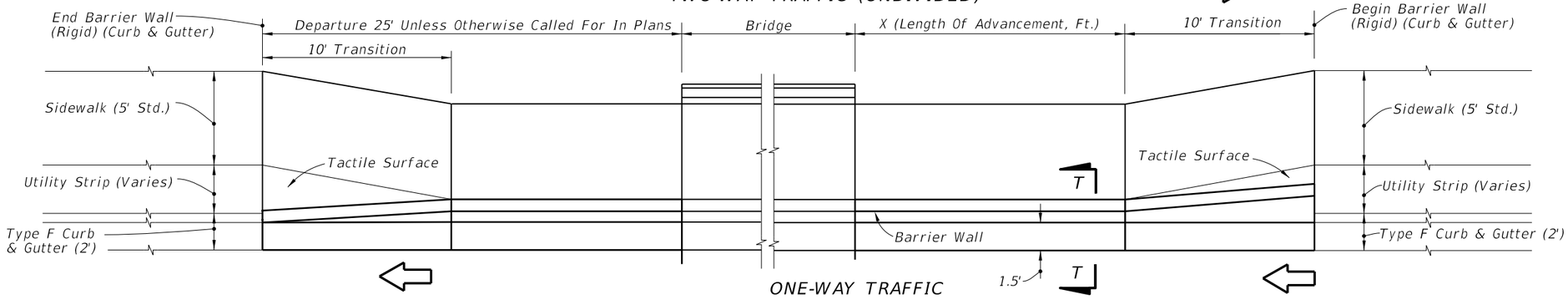

ONE-WAY TRAFFIC
BRIDGE END HAZARD

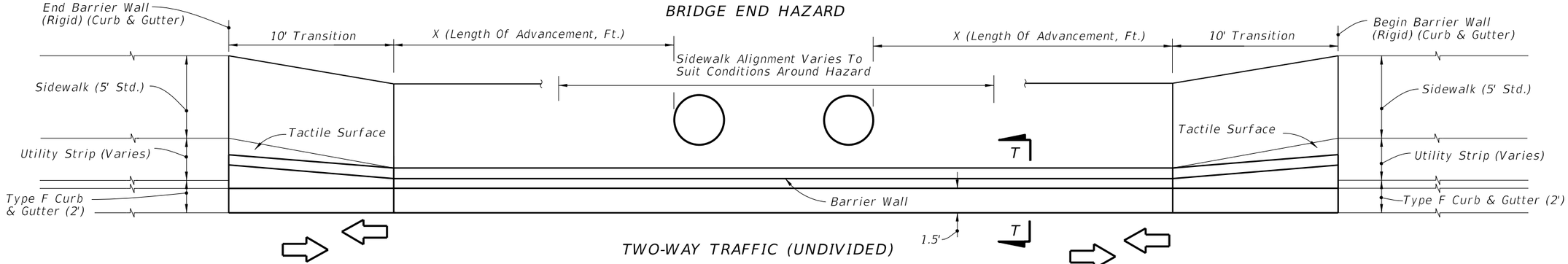

TWO-WAY TRAFFIC (UNDIVIDED)

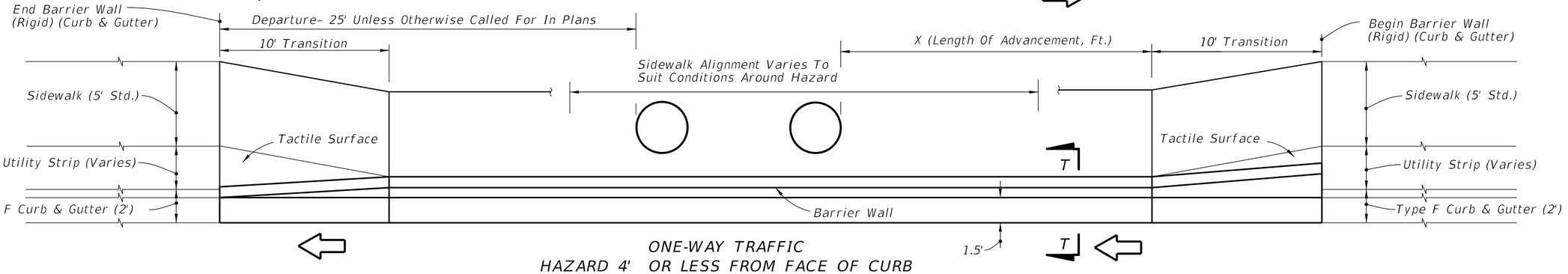

ONE-WAY TRAFFIC
HAZARD 4' OR LESS FROM FACE OF CURB

NOTE:

X=Length of advancement in feet for near and opposing approach lanes. See Sheet 14.

For locations without utility strips see Sheet 11.
For transition and sidewalk details see Sheets 12 & 13 and for sectional details see Sheet 14.

The 1.5' offsets to toe of barrier wall cannot be reduced to accommodate hazards; however, hazards located in the stem of the wall may be accommodated by the details on Sheets 22 & 23.

CONCRETE BARRIER WALL (RIGID) (CURB & GUTTER) ● CURB AND GUTTER WITH UTILITY STRIP AND WITH ADJACENT BICYCLE LANE

C:\d\projects\standards\roadway\00400-s\00410-10of25.dgn rd960rh 1:59:23 PM 6/28/2012

LAST REVISION	REVISION	DESCRIPTION:				
07/01/07			FDOT DESIGN STANDARDS 2013	CONCRETE BARRIER WALL	INDEX NO. 410	SHEET NO. 10

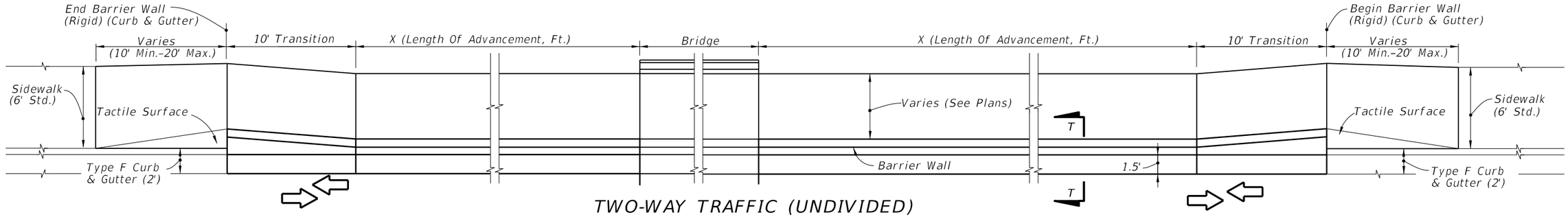

TWO-WAY TRAFFIC (UNDIVIDED)

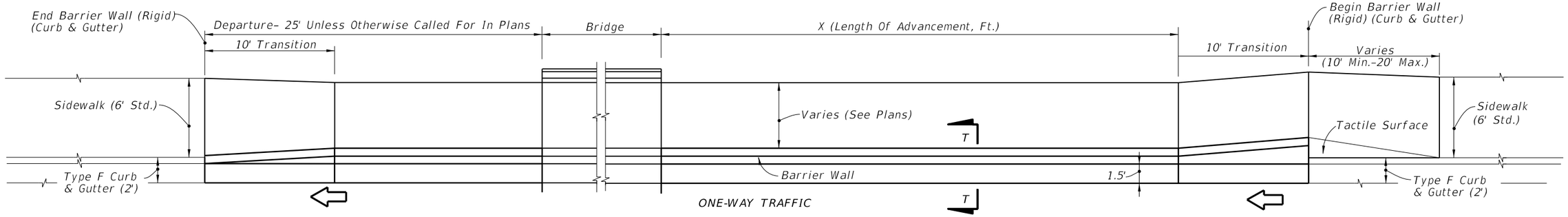

BRIDGE END HAZARD

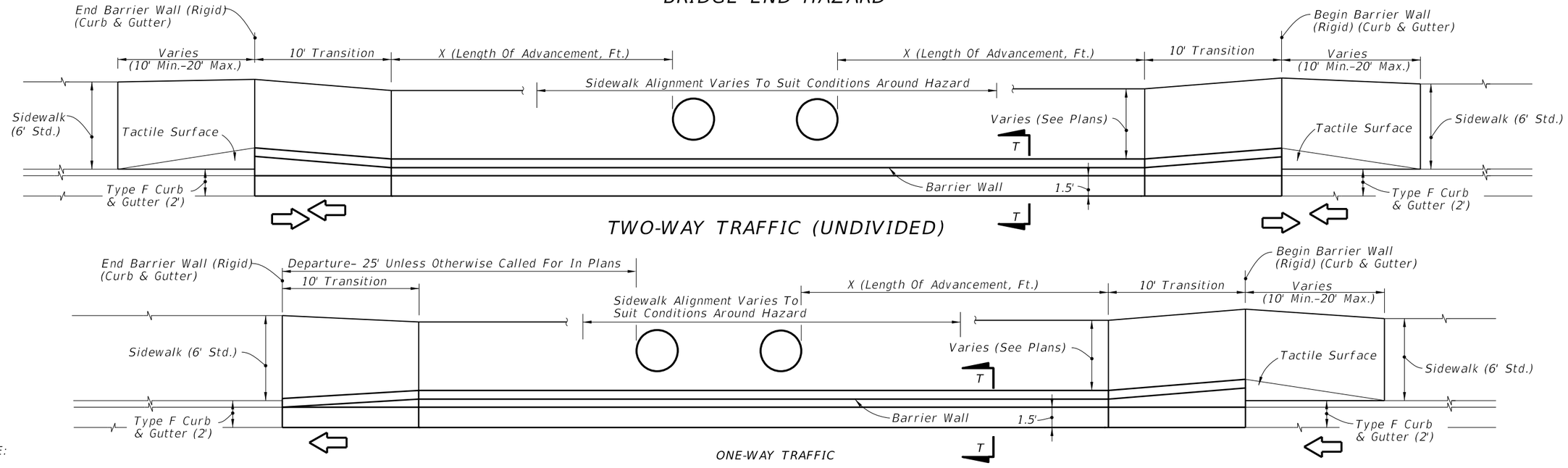

TWO-WAY TRAFFIC (UNDIVIDED)

HAZARD 4' OR LESS FROM FACE OF CURB

NOTE:

X=Length of advancement in feet for near and opposing approach lanes. See Sheet 14.

For locations with utility strips see Sheet 10. For transition and sidewalk see Sheets 12 & 13, for sectional details see Sheet 14.

The 1.5' offsets to toe of barrier wall cannot be reduced to accommodate hazards; however, hazards located in the stem of the wall may be accommodated by the detail on Sheets 22 & 23.

CONCRETE BARRIER WALL (RIGID) (CURB & GUTTER)

CURB AND GUTTER WITHOUT UTILITY STRIP AND WITH ADJACENT BICYCLE LANE

LAST REVISION	REVISION	DESCRIPTION:		FDOT DESIGN STANDARDS 2013	CONCRETE BARRIER WALL	INDEX NO.	SHEET NO.
07/01/07						410	11

C:\d\projects\standards\roadway\00400-s\00410-11of25.dgn
rd960rh
1:59:26 PM
6/28/2012

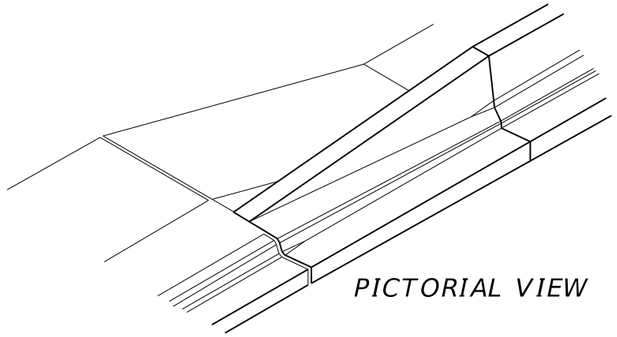

PICTORIAL VIEW

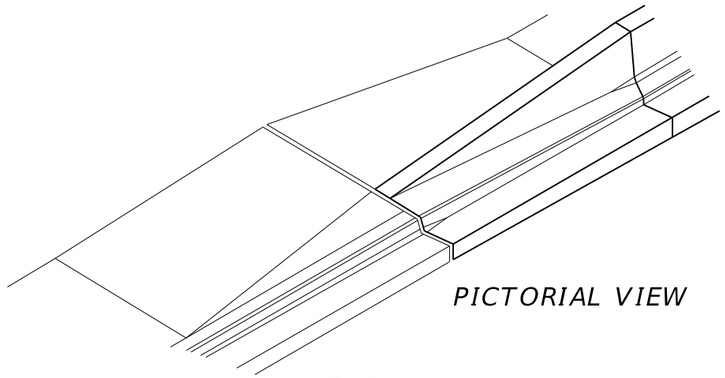

PICTORIAL VIEW

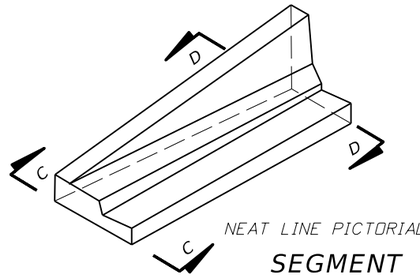

NEAT LINE PICTORIAL VIEW

SEGMENT

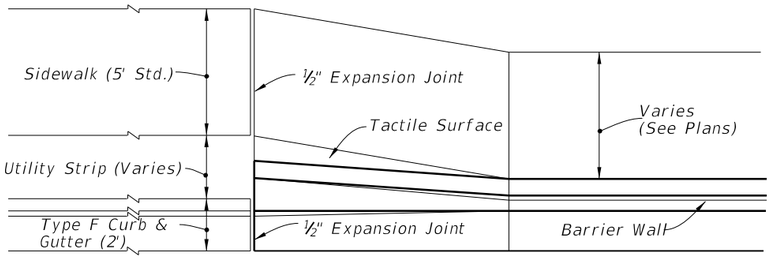

PLAN
WITH UTILITY STRIP

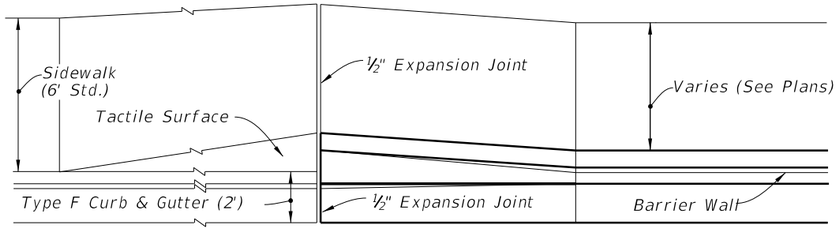

PLAN
WITH UTILITY STRIP

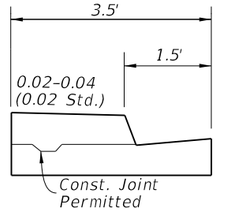

SECTION CC

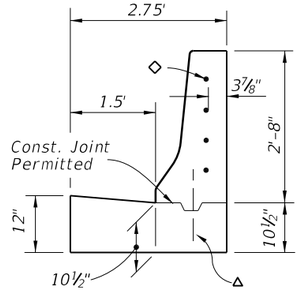

SECTION DD

TWO-WAY TRAFFIC (OPPOSING LANE APPROACH)

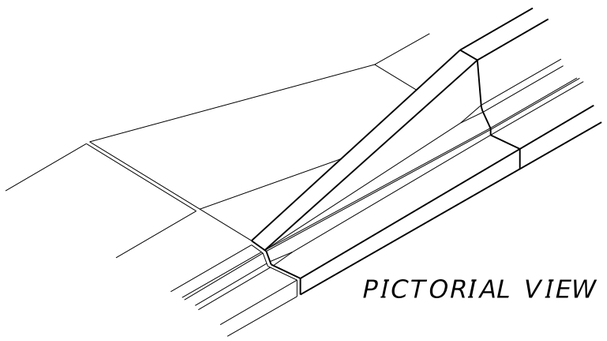

PICTORIAL VIEW

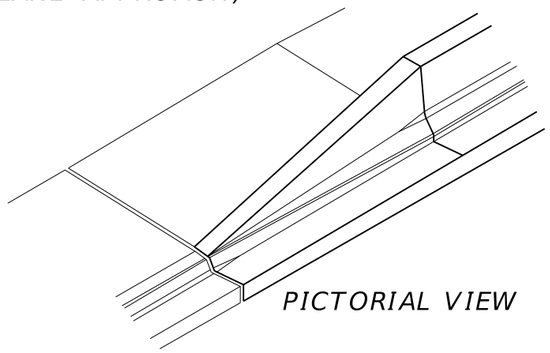

PICTORIAL VIEW

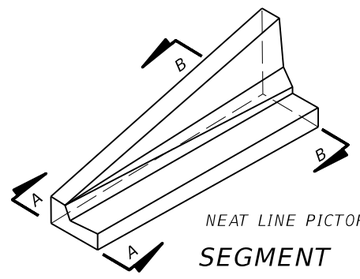

NEAT LINE PICTORIAL VIEW

SEGMENT

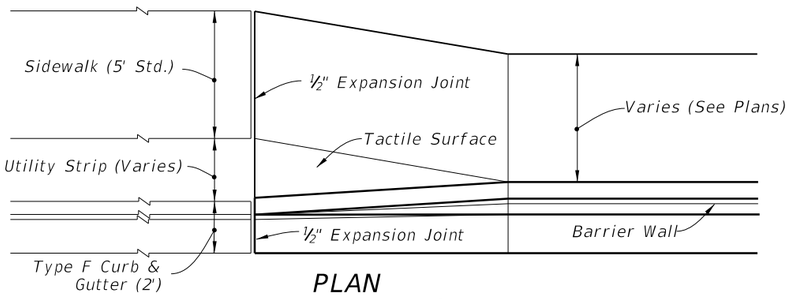

PLAN
WITH UTILITY STRIP

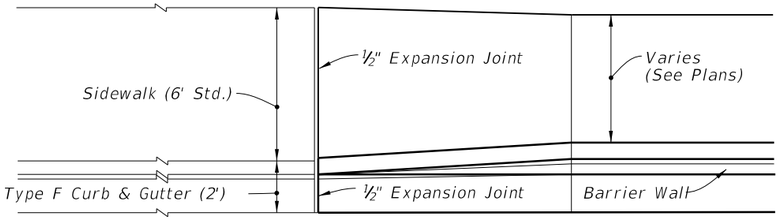

PLAN
WITH UTILITY STRIP

ONE-WAY TRAFFIC (TRAILING END)

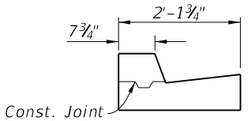

SECTION AA

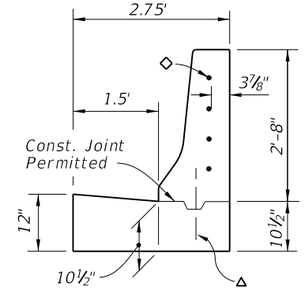

SECTION BB

◇ See Notes Sheet 13

△ See Notes Sheet 13

CONCRETE BARRIER WALL (RIGID) (CURB & GUTTER) • TRANSITION SEGMENTS • WITH ADJACENT BICYCLE LANE

LAST REVISION	REVISION	DESCRIPTION:			INDEX NO.	SHEET NO.
07/01/07			FDOT DESIGN STANDARDS 2013	CONCRETE BARRIER WALL	410	12

C:\d\projects\standards\roadway\00400-s\00410-12of25.dgn rd960rh 1:59:28 PM 6/28/2012

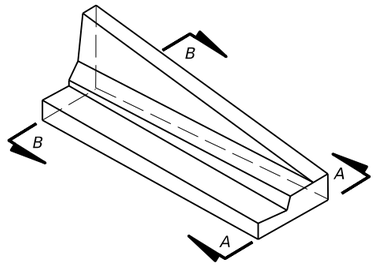

WITH OR WITHOUT UTILITY STRIP
NEAT LINE PICTORIAL VIEW

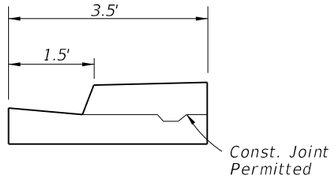

SECTION AA

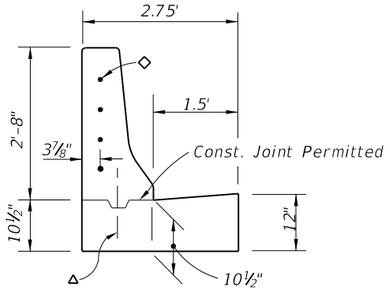

SECTION BB

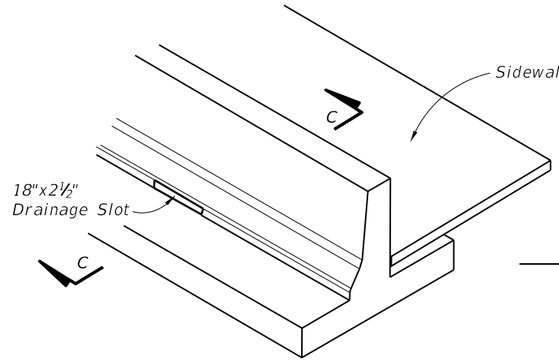

NEAT LINE PICTORIAL VIEW

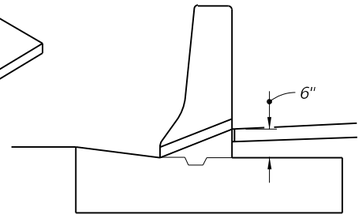

SECTION CC

NOTE: Drainage slots shall be located at all low points along the sidewalk, and, unless otherwise shown in the plans, slots shall be spaced at intervals not exceeding 50' in fill sections and 20' in cut sections. Slots shall be located such that only one bar is cut away or deleted in front and back lines of vertical reinforcement.

SIDEWALK DRAINAGE SLOT FOR
BARRIER WALL (RIGID) (CURB & GUTTER)

◇ Transition Segments Shall Be Doweled Into The End Of The Barrier Wall In The Following Manner:
Four 1" diameter holes 6" deep on 6" centers shall be drilled in the end of the barrier and #6 bars 15" long set in an Adhesive Bonded Material System. The ends of the dowels extending into the transition segment shall be wrapped with one layer of 15 lb. Type I asphalt-saturated roofing felt with the ends crimped.

△ When Construction Joints Are Utilized For Transition Segment Construction The Stem Shall Be Doweled To The Footing In The Following Manner:
Five #5 bars 15" long shall be embedded 7" into the footing. The dowels shall be spaced 15" on centers with the first dowel located 12" from the barrier wall. Dowels may be placed within or adjacent to the keyway.

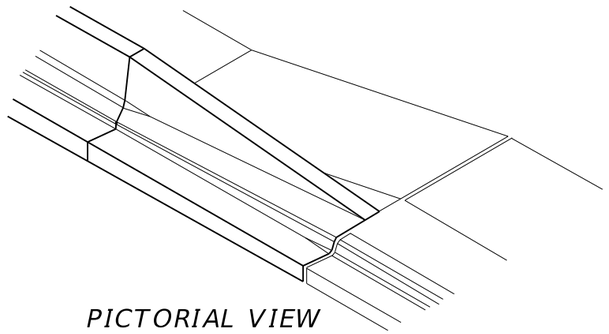

PICTORIAL VIEW

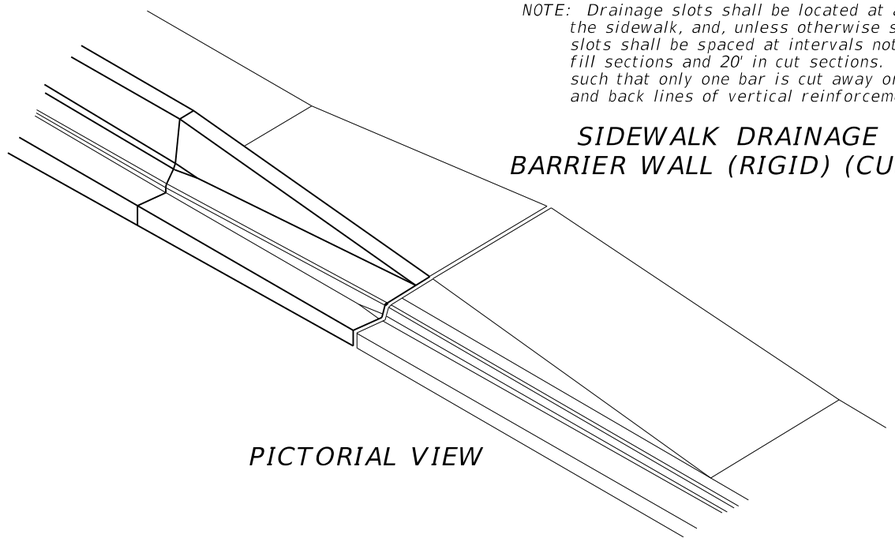

PICTORIAL VIEW

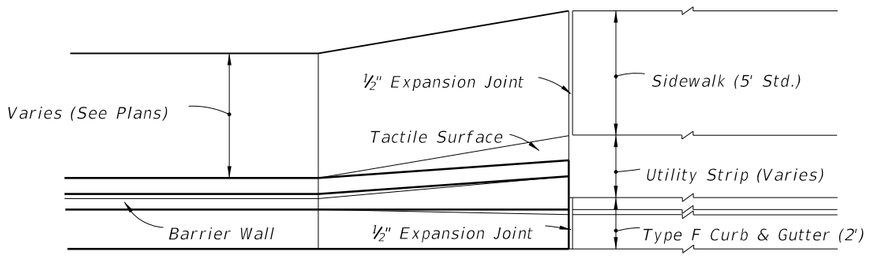

PLAN
WITH UTILITY STRIP

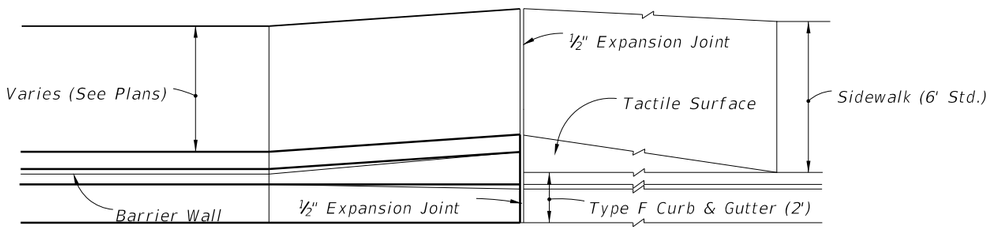

PLAN
WITHOUT UTILITY STRIP

RIGHT SIDE SHOWN, LEFT SIDE OPPOSITE HAND
ONE-WAY AND TWO-WAY TRAFFIC (NEAR LANE APPROACH)

CONCRETE BARRIER WALL (RIGID) (CURB & GUTTER) • TRANSITION SEGMENT • WITH ADJACENT BICYCLE LANE

LAST REVISION	REVISION	DESCRIPTION:		FDOT DESIGN STANDARDS 2013	CONCRETE BARRIER WALL	INDEX NO.	SHEET NO.
00						410	13

6/28/2012 1:59:30 PM rd960rh C:\d\projects\standards\roadway\00400-s\00410-13of25.dgn

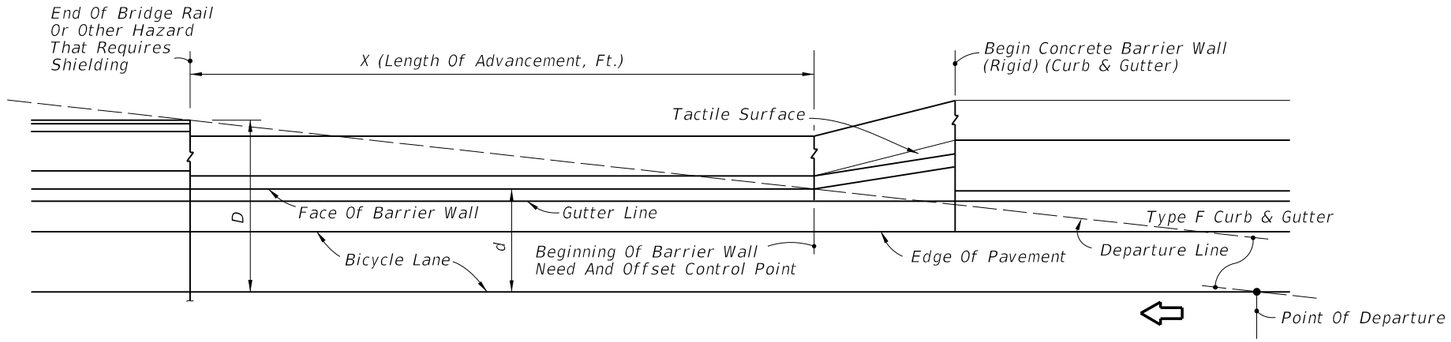

RIGHT SIDE APPROACH SHOWN - LEFT SIDE OPPOSITE HAND

NEAR LANE APPROACH

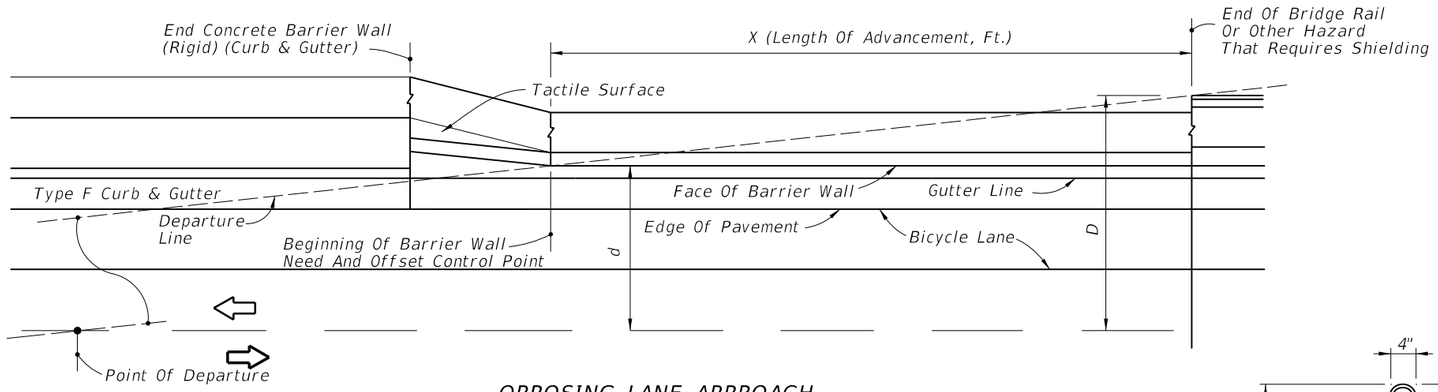

OPPOSING LANE APPROACH

WITH OR WITHOUT UTILITY STRIP - UTILITY STRIP SHOWN
- SEE SHEET 10 & 11 FOR APPLICATIONS

Design Speed mph	Length Of Advancement, Ft. (X)
≤ 45	= 16 (D–d)
Note: The minimum length of advancement for both near and opposing lane approaches is 40'.	

Equation Variables:

D = Distance in feet from near edge of the near approach traffic lane to back of hazard or clear zone width whichever is lesser. For left side hazards and clear zones on two-way undivided facilities D is measured from the inside edge of the near approach traffic lane.

d = Distance in feet from near edge of the near approach traffic lane to the face of barrier (at offset control point). For left side hazards on two-way undivided facilities d is measured from the inside edge of the nearest opposing traffic lane.

LENGTH OF ADVANCEMENT

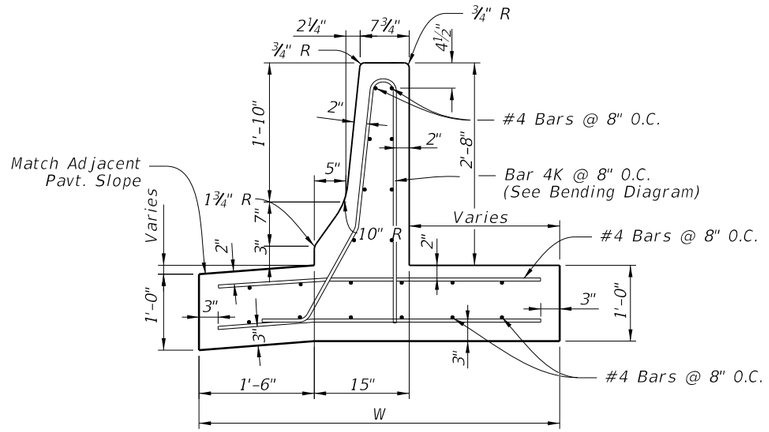

FOR HIGH SIDE
SECTION TT

QUANTITIES			
Length* Of Barrier Wall (LF)	W LF	Class II Conc. CY Per LF	Rein. Steel Lbs Per LF
>73'	4'-9"	0.26	29
56' to 73'	5'-6"	0.29	32
48' to 55'	6'-0"	0.31	34
41' to 47'	6'-6"	0.33	37
36' to 41'	7'-0"	0.35	39
29' to 35'	8'-0"	0.38	42

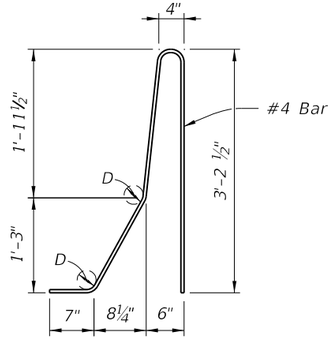

BAR 4K
BENDING DIAGRAM

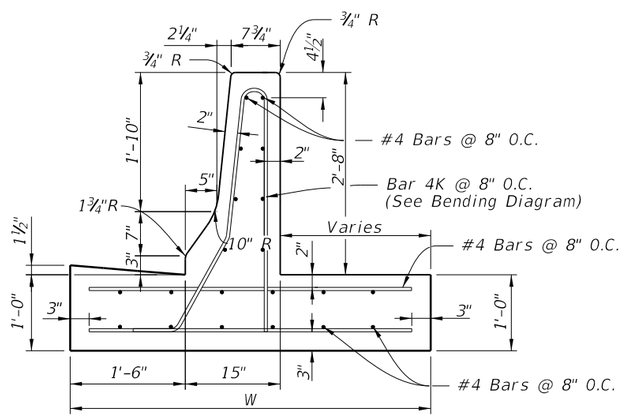

FOR LOW SIDE
SECTION TT

Note: All longitudinal reinforcement No. 4 bars. Shorter segments due to construction or expansion joint shall be doweled in the manner described for 'Transition Segments' on Sheet 13.

Transverse expansion joints are to be constructed at the juncture of wall transitions and curb and gutter, and at intervals so that spacing will not exceed 100'.

For barrier wall inlet details see Index No. 219. Inlet extends into bicycle lane 12". Wall to be paid for under the contract unit price for Shoulder Concrete Barrier Wall (Rigid-Curb & Gutter), LF.

CONCRETE BARRIER WALL (RIGID) (CURB & GUTTER) WITH ADJACENT BICYCLE LANE

LAST REVISION	REVISION	DESCRIPTION:		FDOT DESIGN STANDARDS 2013	CONCRETE BARRIER WALL	INDEX NO.	SHEET NO.
07/01/09						410	14

6/28/2012 1:59:32 PM rd960rh C:\d\projects\standards\roadway\00400-s\00410-14of25.dgn

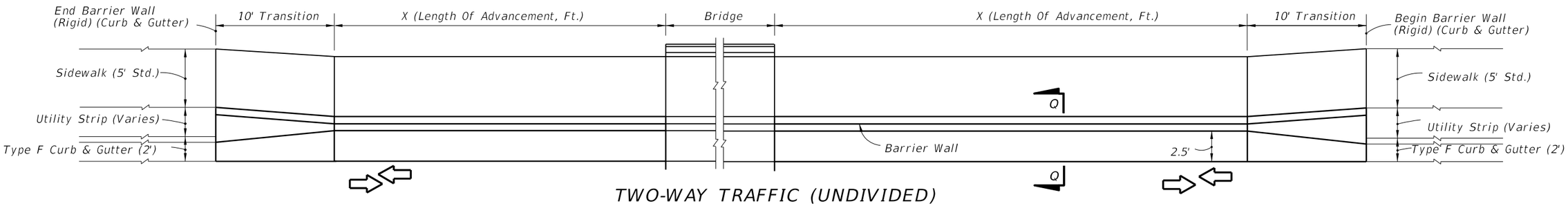

TWO-WAY TRAFFIC (UNDIVIDED)

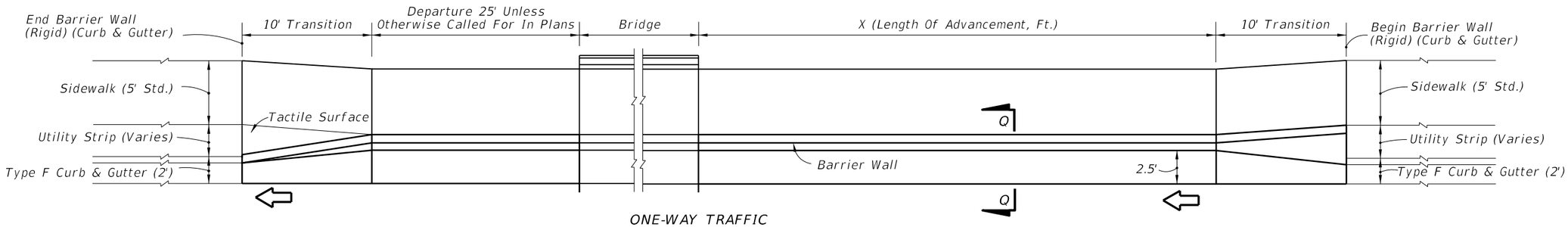

ONE-WAY TRAFFIC

BRIDGE END HAZARD

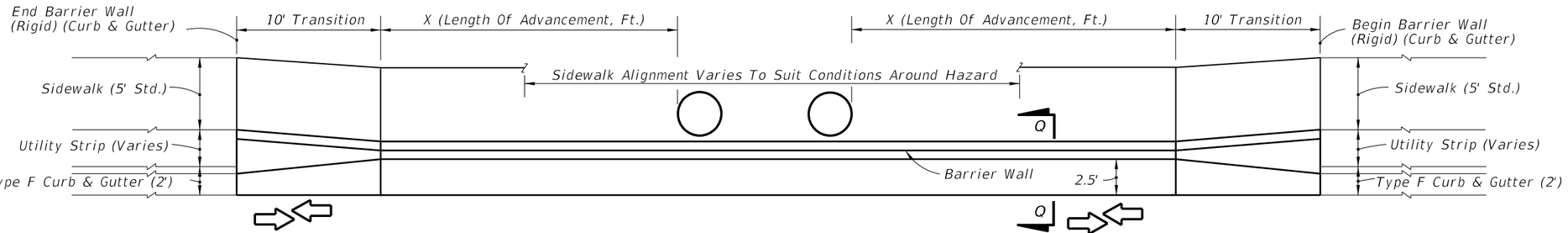

TWO-WAY TRAFFIC (UNDIVIDED)

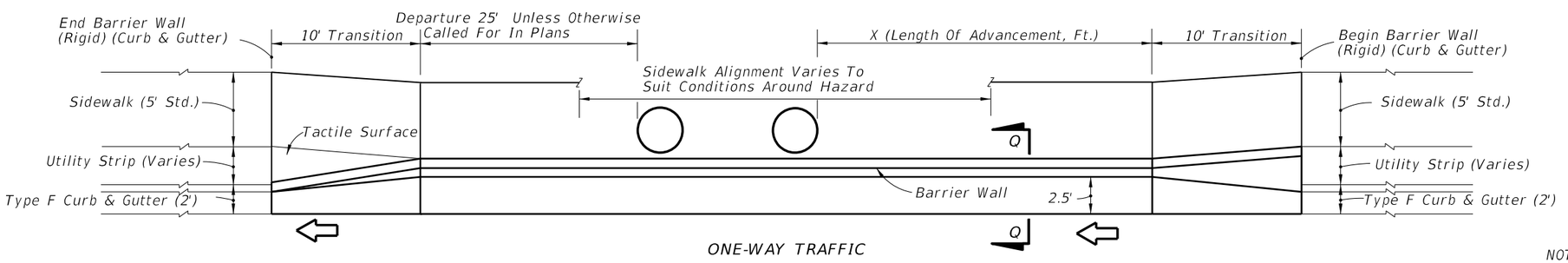

ONE-WAY TRAFFIC

HAZARD 4' OR LESS FROM FACE OF CURB

CONCRETE BARRIER WALL (RIGID) (CURB & GUTTER)
CURB AND GUTTER WITH UTILITY STRIP AND WITHOUT ADJACENT BICYCLE LANE

NOTE:
X=Length of advancement in feet for near and opposing approach lanes. See Sheet 19.
For locations without utility strips see Sheet 16.
For transition and sidewalk see Sheets 17 & 18 and for sectional details see Sheet 19.
The 2.5' offsets to toe of barrier wall cannot be reduced to accommodate hazards; however, hazards located in the stem of the wall may be accommodated by the details on Sheets 22 & 23.

C:\d\projects\standards\roadway\00400-s\00410-15of25.dgn
rd960rh
1:59:34 PM
6/28/2012

LAST REVISION	REVISION	DESCRIPTION:			INDEX NO.	SHEET NO.
00			FDOT DESIGN STANDARDS 2013	CONCRETE BARRIER WALL	410	15

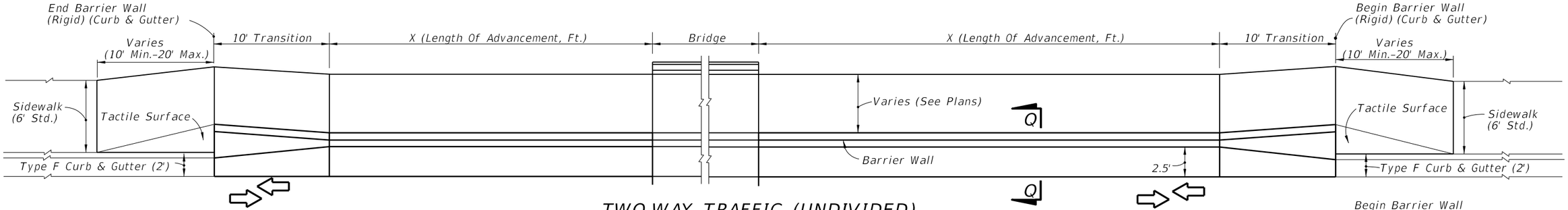

TWO-WAY TRAFFIC (UNDIVIDED)

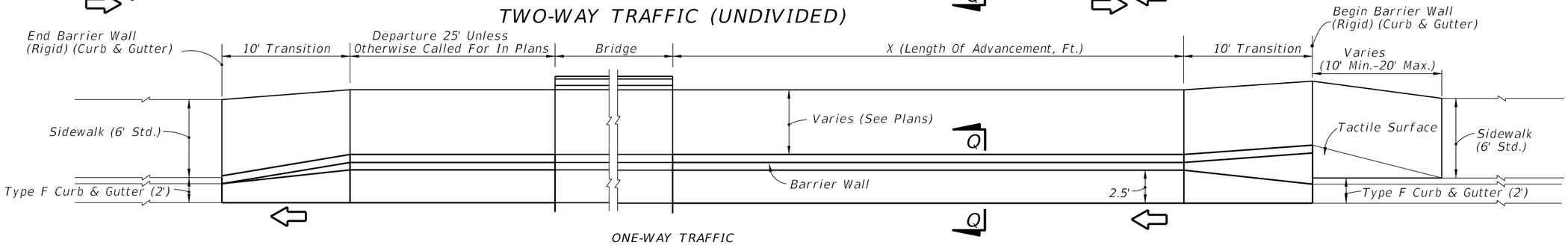

ONE-WAY TRAFFIC

BRIDGE END HAZARD

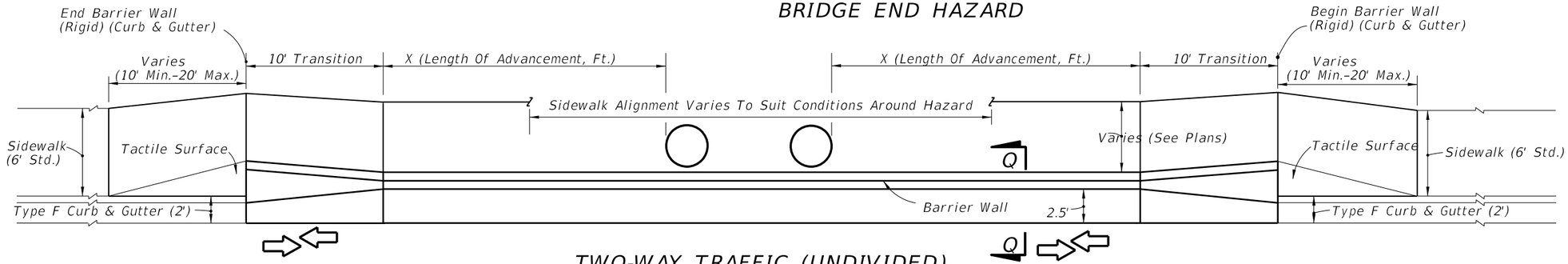

TWO-WAY TRAFFIC (UNDIVIDED)

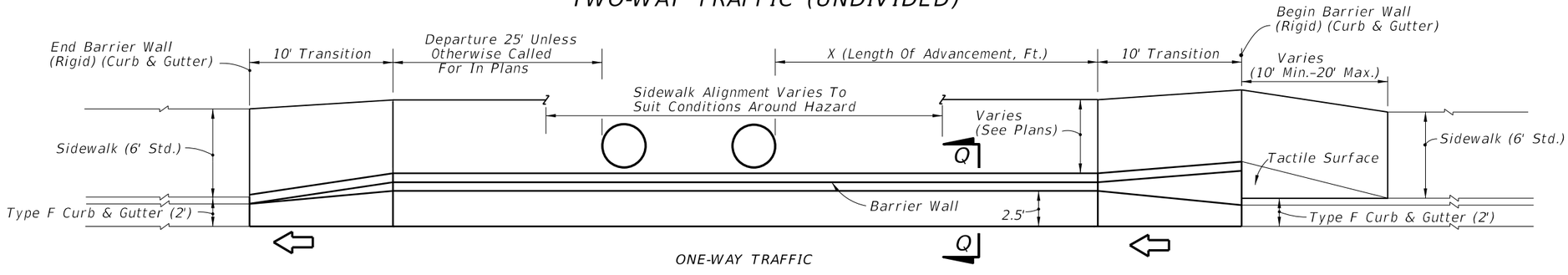

ONE-WAY TRAFFIC

HAZARD 4' OR LESS FROM FACE OF CURB

CONCRETE BARRIER WALL (RIGID) (CURB & GUTTER)
CURB AND GUTTER WITHOUT UTILITY STRIP AND WITHOUT ADJACENT BICYCLE LANE

NOTE:
X=Length of advancement in feet for near and opposing approach lanes. See Sheet 19.

For locations with utility strips see Sheet 15. For transition and sidewalk see Sheets 17 & 18 and for sectional details see Sheet 19.

The 2.5' offsets to toe of barrier wall cannot be reduced to accommodate hazards; however, hazards located in the stem of the wall may be accommodated by the detail on Sheets 22 & 23.

C:\d*\projects\standards\roadway\00400-s\00410-16of25.dgn
rd960rh
1:59:36 PM
6/28/2012

LAST REVISION	REVISION	DESCRIPTION:			INDEX NO.	SHEET NO.
07/01/07			FDOT DESIGN STANDARDS 2013	CONCRETE BARRIER WALL	410	16

◇ See Sheet 19
△ See Sheet 19

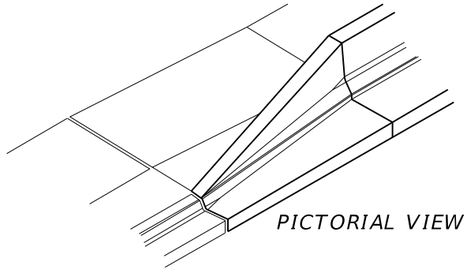

PICTORIAL VIEW

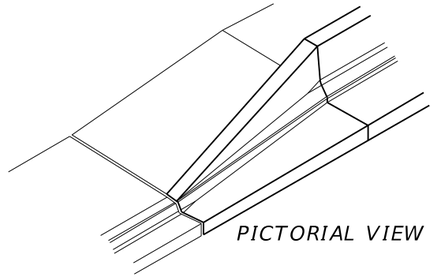

PICTORIAL VIEW

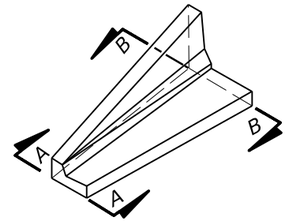

NEAT LINE PICTORIAL VIEW

SEGMENT

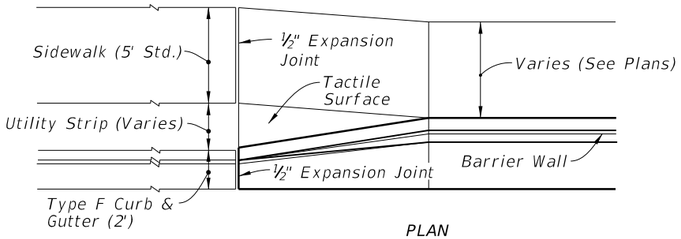

PLAN

WITH UTILITY STRIP

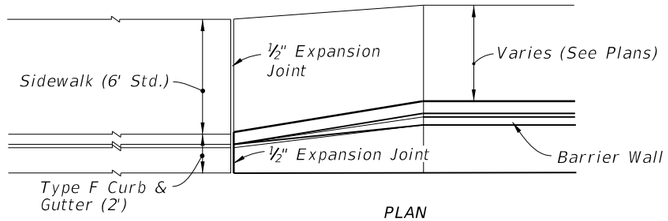

PLAN

WITHOUT UTILITY STRIP

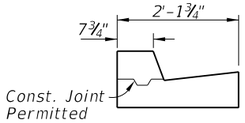

SECTION AA

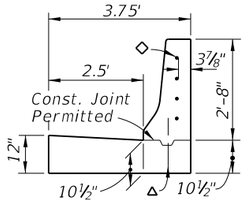

SECTION BB

ONE-WAY TRAFFIC (TRAILING END)

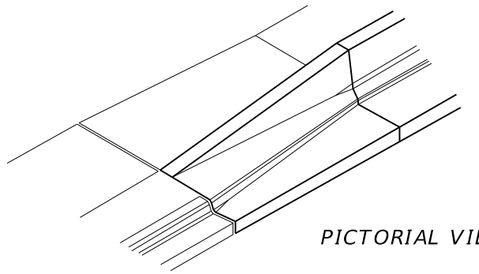

PICTORIAL VIEW

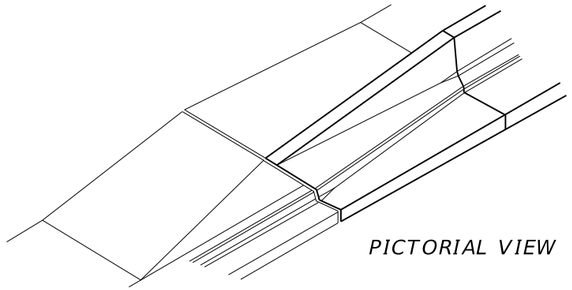

PICTORIAL VIEW

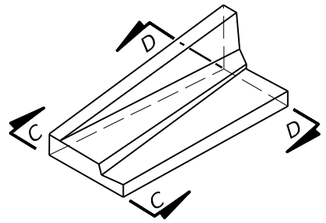

NEAT LINE PICTORIAL VIEW

SEGMENT

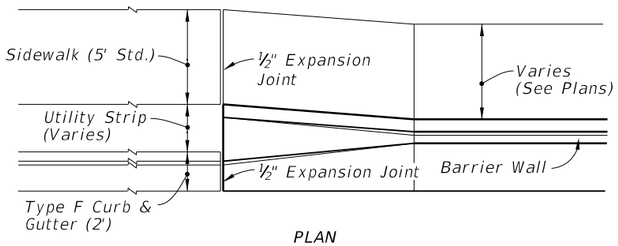

PLAN

WITH UTILITY STRIP

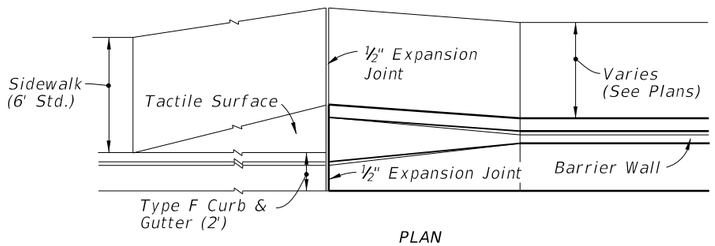

PLAN

WITH UTILITY STRIP

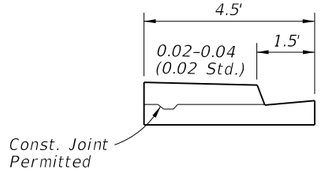

SECTION CC

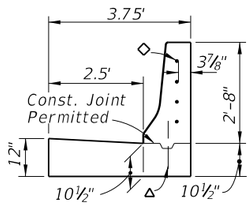

SECTION DD

TWO-WAY TRAFFIC (OPPOSING LANE APPROACH)

CONCRETE BARRIER WALL (RIGID) (CURB & GUTTER) • TRANSITION SEGMENTS • WITHOUT ADJACENT BICYCLE LANE

LAST REVISION	REVISION	DESCRIPTION:			INDEX NO.	SHEET NO.
07/01/07			FDOT DESIGN STANDARDS 2013	CONCRETE BARRIER WALL	410	17

C:\d\projects\standards\roadway\00400-s\00410-17of25.dgn
rd960rh
1:59:39 PM
6/28/2012

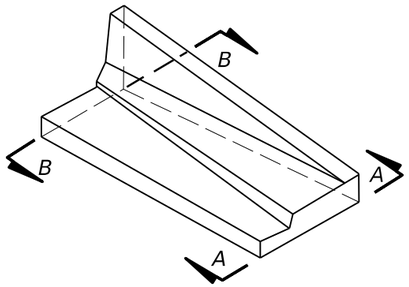

WITH OR WITHOUT UTILITY STRIP
NEAT LINE PICTORIAL VIEW

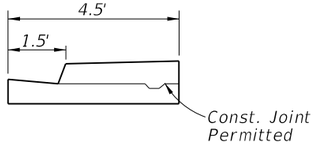

SECTION AA

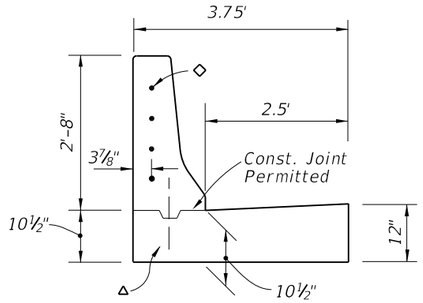

SECTION BB

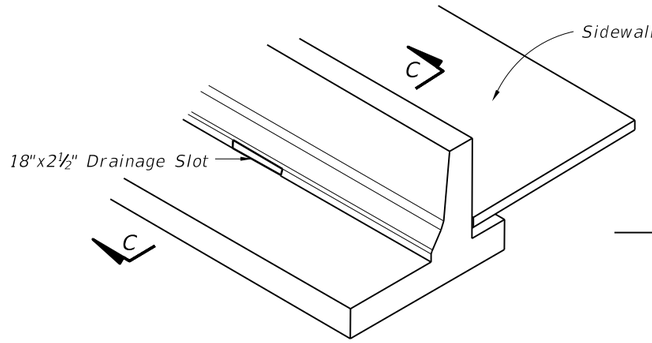

NEAT LINE PICTORIAL VIEW

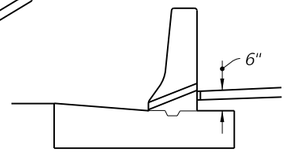

SECTION CC

◇ *Transition Segments Shall Be Doweled Into The End Of The Barrier Wall In The Following Manner:*
Four 1" diameter holes 6" deep on 6" centers shall be drilled in the end of the barrier and #6 bars 15" long set in an Adhesive Bonded Material System. The ends of the dowels extending into the transition segment shall be wrapped with one layer of 15 lb. Type I asphalt-saturated roofing felt with the ends crimped.

△ *When Construction Joints Are Utilized For Transition Segment Construction The Stem Shall Be Doweled To The Footing In The Following Manner:*
Five #5 bars 15" long shall be embedded 7" into the footing. The dowels shall be spaced 15" on centers with the first dowel located 12" from the barrier wall. Dowels may be placed within or adjacent to the keyway.

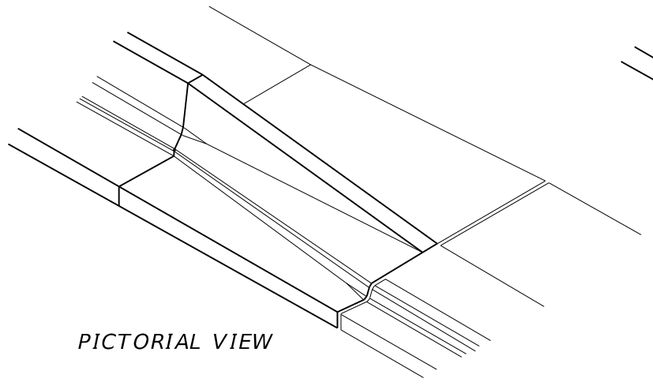

PICTORIAL VIEW

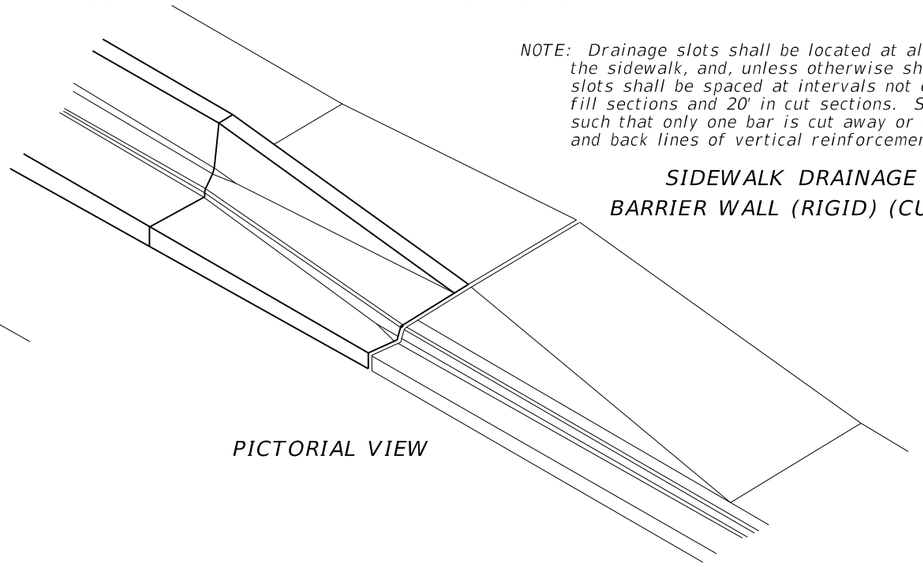

PICTORIAL VIEW

NOTE: Drainage slots shall be located at all low points along the sidewalk, and, unless otherwise shown in the plans, slots shall be spaced at intervals not exceeding 50' in fill sections and 20' in cut sections. Slots shall be located such that only one bar is cut away or deleted in front and back lines of vertical reinforcement.

SIDEWALK DRAINAGE SLOT FOR
BARRIER WALL (RIGID) (CURB & GUTTER)

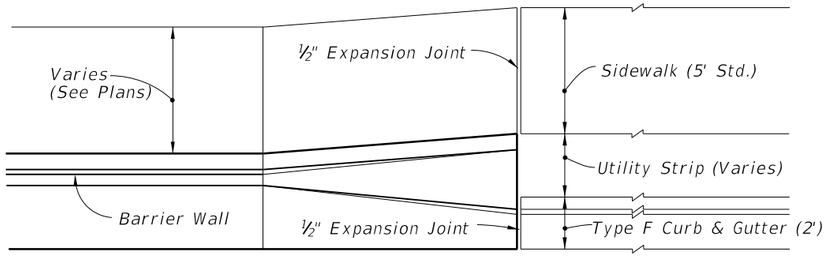

PLAN
WITH UTILITY STRIP

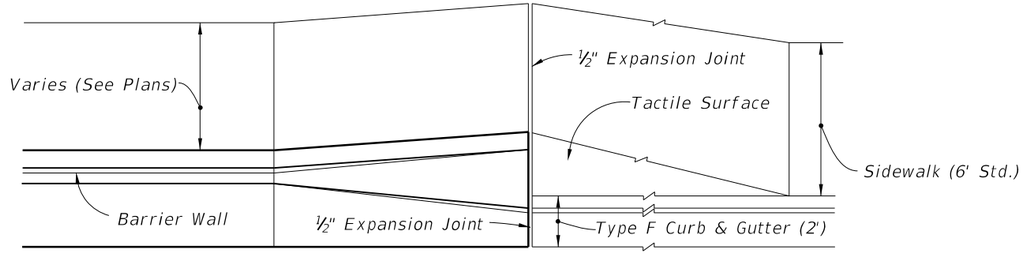

PLAN
WITHOUT UTILITY STRIP

RIGHT SIDE SHOWN, LEFT SIDE OPPOSITE HAND

ONE-WAY AND TWO-WAY TRAFFIC (NEAR LANE APPROACH)
CONCRETE BARRIER WALL (RIGID) (CURB & GUTTER) ● TRANSITION SEGMENT ● WITHOUT ADJACENT BICYCLE LANE

C:\d\projects\standards\roadway\00400-s\00410-18of25.dgn rd960rh 1:59:41 PM 6/28/2012

LAST REVISION	REVISION	DESCRIPTION:		FDOT DESIGN STANDARDS 2013	CONCRETE BARRIER WALL	INDEX NO.	SHEET NO.
00						410	18

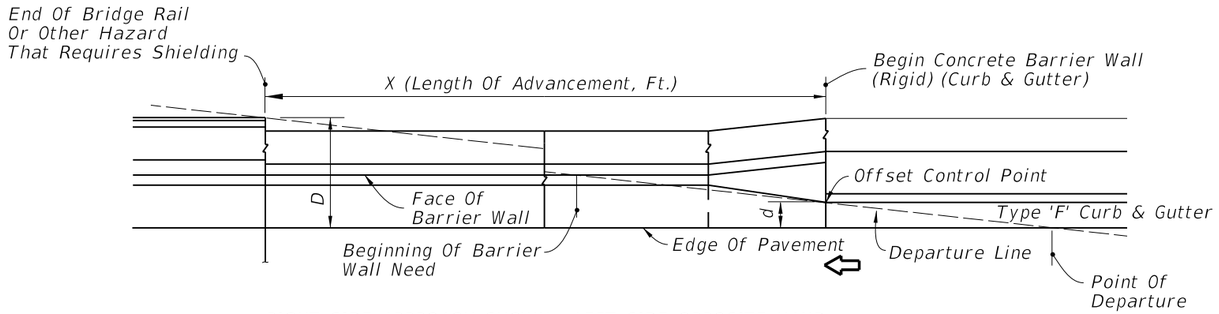

RIGHT SIDE APPROACH SHOWN - LEFT SIDE OPPOSITE HAND

NEAR LANE APPROACH

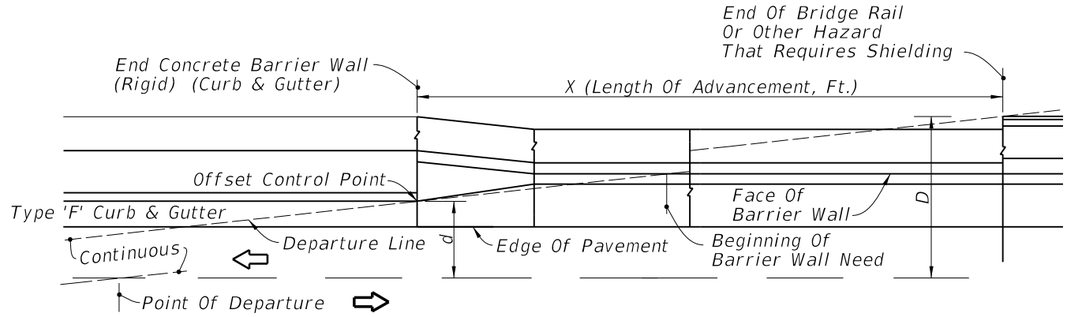

OPPOSING LANE APPROACH

WITH OR WITHOUT UTILITY STRIP - UTILITY STRIP SHOWN
SEE SHEET 15 & 16 FOR APPLICATIONS

Design Speed mph	Length Of Advancement, Ft.(X)
≤ 45	16 (D-d)
Note: The minimum length of advancement for both near and opposing lane approaches is 40'.	

Equation Variables:

D= Distance in feet from near edge of the near approach traffic lane to back of hazard or clear zone width whichever is lesser. For left side hazards and clear zones on two-way undivided facilities D is measured from the inside edge of the near approach traffic lane.

d= Distance in feet from near edge of the near approach traffic lane to the face of curb (at offset control point). For left side hazards on two-way undivided facilities d is measured from the inside edge of the nearest opposing traffic lane.

LENGTH OF ADVANCEMENT

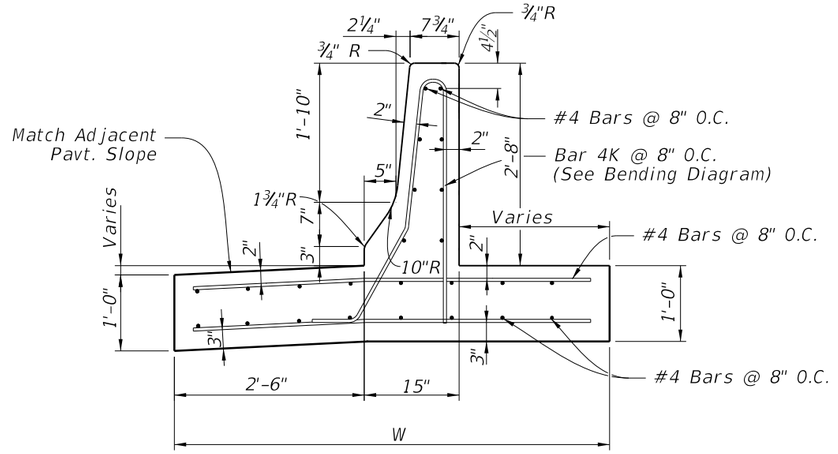

FOR HIGH SIDE
SECTION QQ

QUANTITIES			
Length* Of Barrier Wall (LF)	W LF	Class II Conc. CY Per LF	Rein. Steel Lbs Per LF
>73'	4'-9"	0.26	29
56' to 73'	5'-6"	0.29	32
48' to 55'	6'-0"	0.31	34
41' to 47'	6'-6"	0.33	37
36' to 41'	7'-0"	0.35	39
29' to 35'	8'-0"	0.38	42

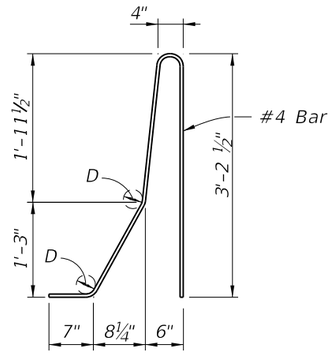

BAR 4K
BENDING DIAGRAM

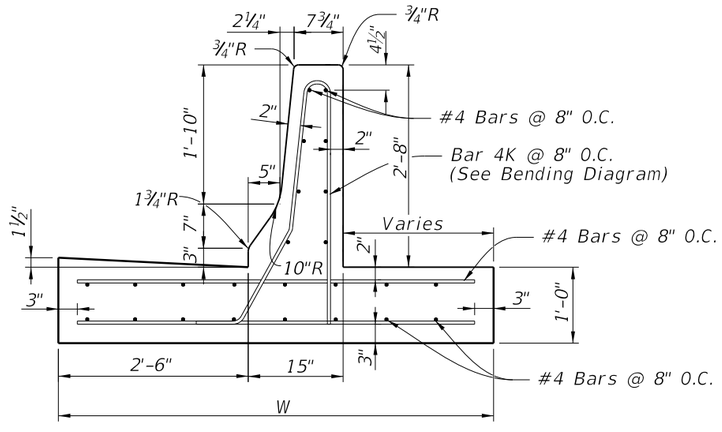

FOR LOW SIDE
SECTION QQ

Note: All longitudinal reinforcement #4 bars. Shorter segments due to construction or expansion joint shall be doweled in the manner described for 'Transition Segments' on Sheet 18.

Transverse expansion joints are to be constructed at the juncture of wall transitions and curb and gutter, and at intervals so that spacing will not exceed 100'.

For barrier wall inlet details see Index No. 219. Wall to be paid for under the contract unit price for Shoulder Concrete Barrier Wall (Rigid-Curb & Gutter), LF.

CONCRETE BARRIER WALL (RIGID) (CURB & GUTTER) • WITHOUT ADJACENT BICYCLE LANE

C:\d\projects\standards\roadway\00400-s\00410-19of25.dgn
rd960rh
1:59:43 PM
6/28/2012

LAST REVISION	REVISION	DESCRIPTION:		FDOT DESIGN STANDARDS 2013	CONCRETE BARRIER WALL	INDEX NO.	SHEET NO.
07/01/09						410	19

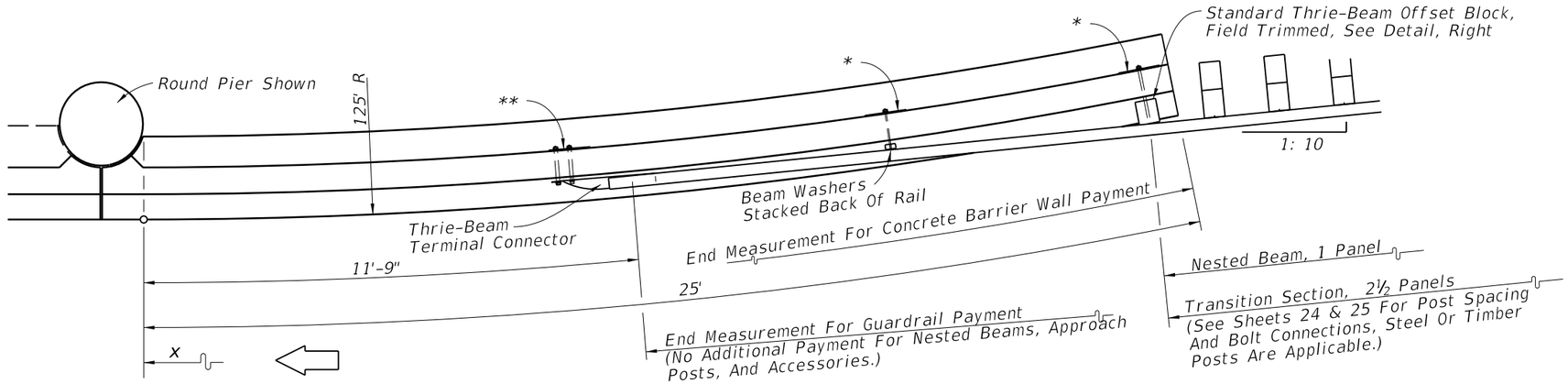

PLAN FOR DESIGN SPEED ≤ 45 MPH

NOTE:
For details at Rigid Hazard see Sheet 21.

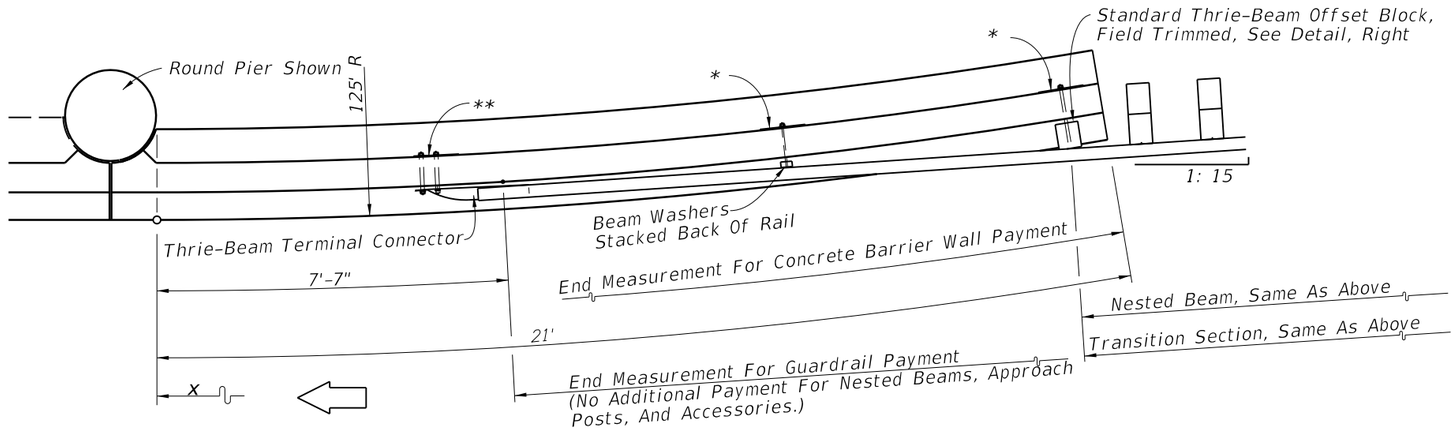

PLAN FOR DESIGN SPEED ≥ 50 MPH

Note: For continuous barrier between independent bents or single pier columns see Sheets 21-23.

ARC LENGTH (FT)	DISTANCE "x" (FT)	OFFSETS "y" (FT)
4	4.00	0.06
8	7.99	0.26
12	11.98	0.58
16	15.96	1.02
20	19.91	1.60
21	20.91	1.76
24	23.85	2.30
25	24.83	2.49

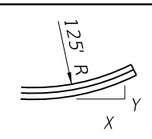

Note:
Wall may be constructed in chords having lengths ≤ 4 feet.

SHOULDER BARRIER WALL AT ABOVE GROUND RIGID HAZARDS
WHEN GUARDRAIL OFFSET FROM HAZARD LESS THAN 3'

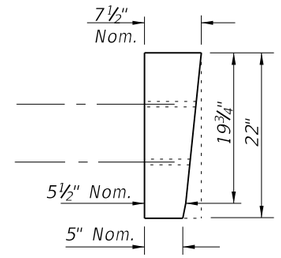

FOR USE WITH EITHER
1: 10 OR 1: 15
GUARDRAIL TRANSITIONS

STANDARD THRIE-BEAM
OFFSET BLOCK
(FIELD TRIMMED)

NOTES

1. This wall is intended for use where the wall has bearing against the hazard; when the length between bent supports or pier columns exceeds 13', the affected segments shall be constructed in accordance with the detail for 'Reinforced Concrete Barrier Wall (Shoulder)', 'Section TT' or 'Section QQ', this index. In cases where the barrier wall and slope pavement or other structure would occupy the same location, the wall and structure are to be modified as detailed in the plans.

2. The barrier wall radial segments are intended for use on approach and trailing ends of both one-way and two-way facilities. The guardrail connections shown on this sheet apply to one-way approaches and to the approaching and trailing ends of two-lane two-way facilities. On trailing ends of two-way multilane and one-way facilities the end connection on Sheet 1 may be used. For walls with normal offsets from hazards and their guardrail connections, see Sheet 24 & 25.

3. Refer to Index No. 400 for additional guardrail information.

4. Wall to be paid for under the contract unit price for Shoulder Concrete Barrier Wall (Rigid-Shoulder), LF.

* 12"x12"x¼" galvanized steel back-up plate with ⅝" post bolts (either 14" or 18" long) and nuts with ⅝" plain round washers under nuts.

** Attach thrie-beam terminal connector to shoulder barrier wall with a 21"x12"x⅝" thrie beam terminal connector plate and 5-⅞"x12" long HS hex bolts and nuts with ⅞" plain round washers under heads and nuts.

C:\d\projects\standards\roadway\00400-s\00410-20of25.dgn rd960rh 1:59:45 PM 6/28/2012

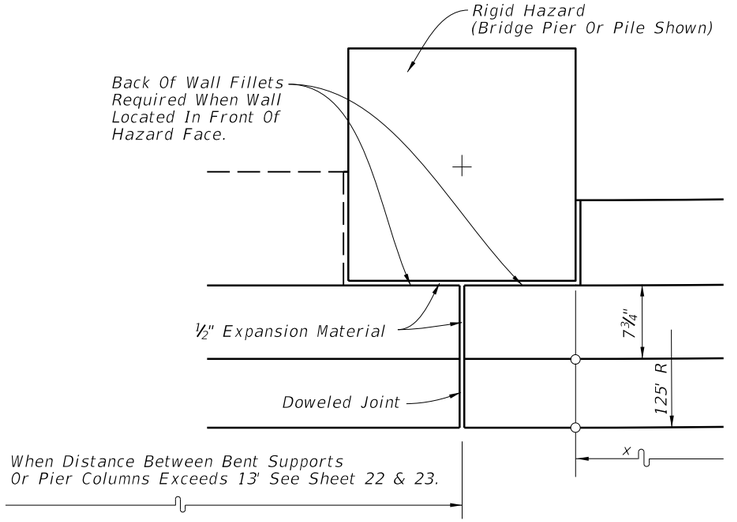

BARRIER WALL AT SQUARE OR RECTANGULAR SHAPED HAZARD

PARTIAL PLAN

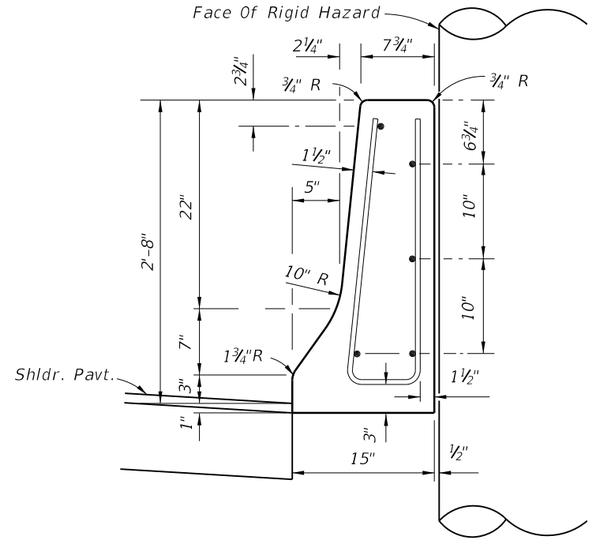

SECTION AA

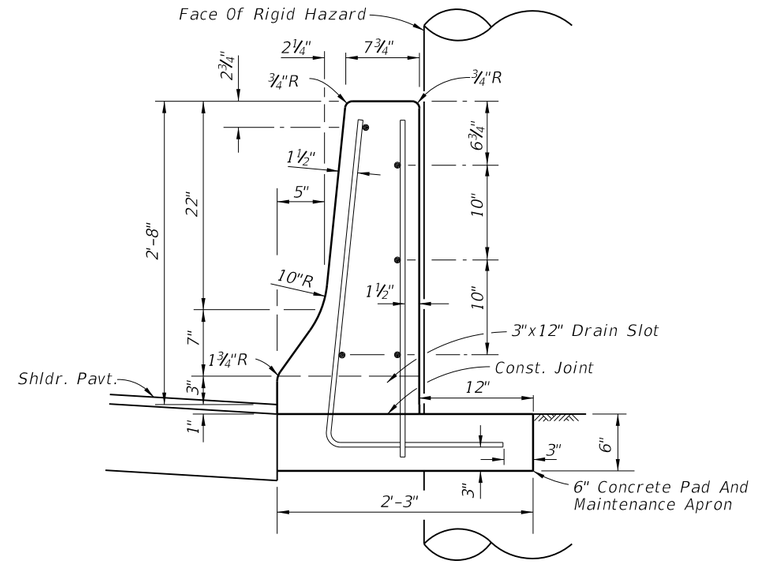

TO BE CONST. IN LIEU OF SECTION AA WHEN THRU DRAINAGE REQUIRED

SECTION BB

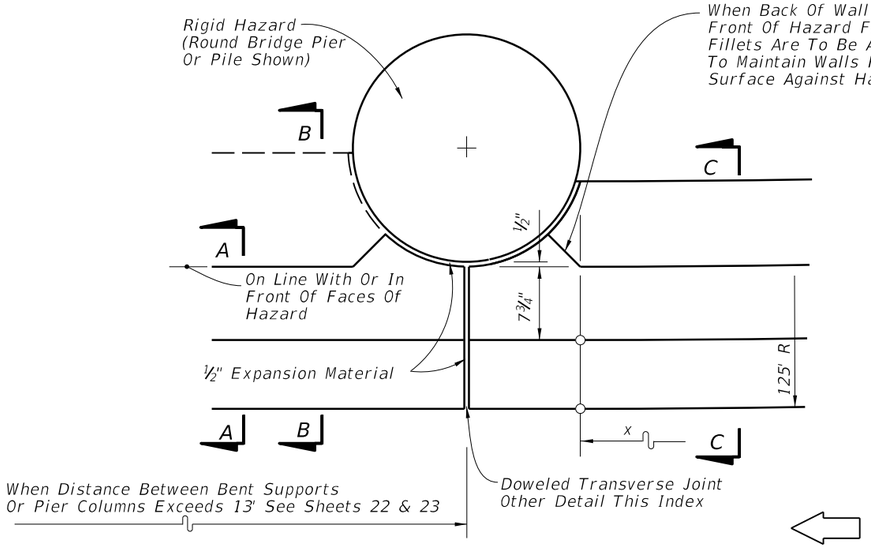

BARRIER WALL AT ROUND HAZARD

PARTIAL PLAN

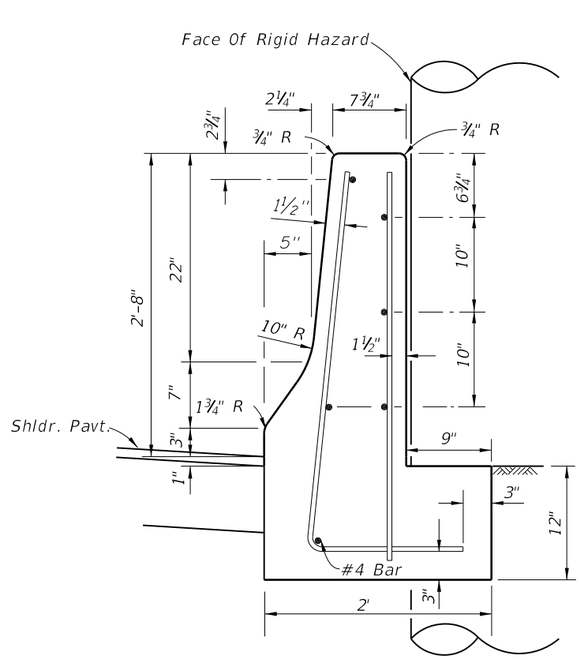

SECTION CC

NOTE:
All vertical reinforcement #4 bars at 12" centers.
All horizontal reinforcement #5 bars.

SHOULDER BARRIER WALL AT ABOVE GROUND RIGID HAZARDS WHEN GUARDRAIL OFFSET FROM HAZARD LESS THAN 3'

LAST REVISION	REVISION	DESCRIPTION:		FDOT DESIGN STANDARDS 2013	CONCRETE BARRIER WALL	INDEX NO.	SHEET NO.
07/01/05						410	21

C:\d_projects\standards\roadway\00400-s\00410-21of25.dgn
rd960rh
1:59:48 PM
6/28/2012

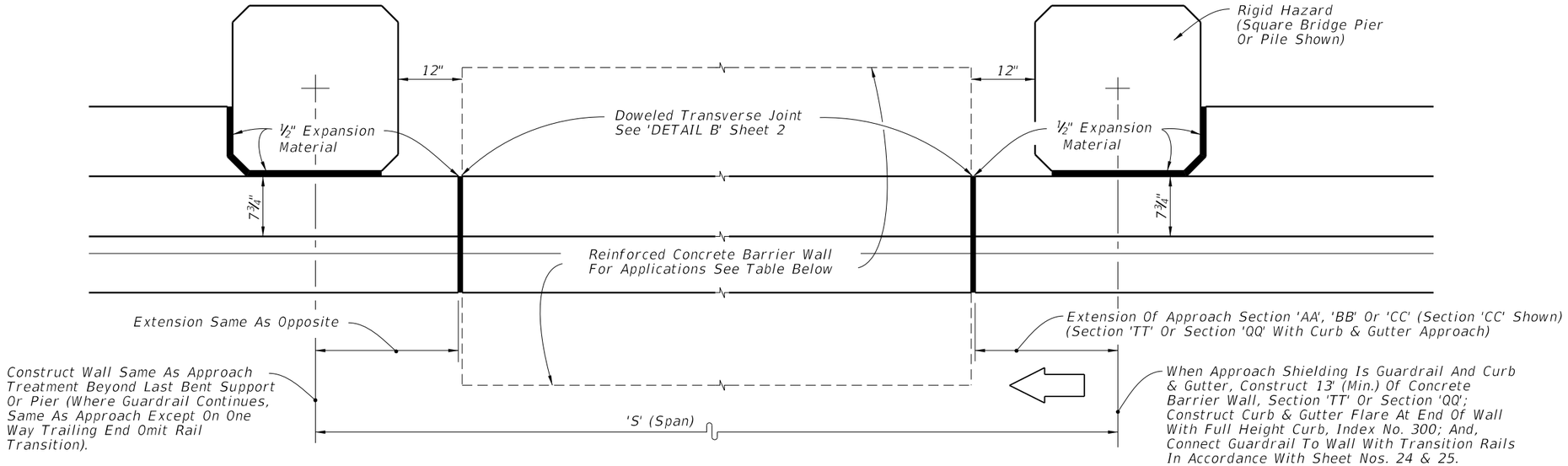

TOP VIEW

BARRIER WALL AT SQUARE PIER

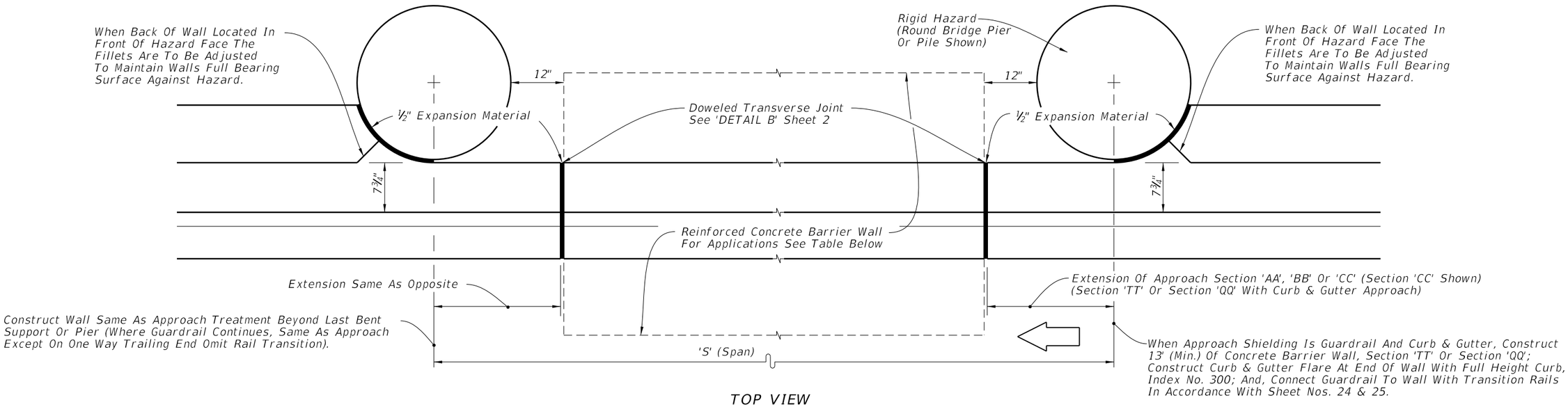

TOP VIEW

BARRIER WALL AT ROUND PIER

CONCRETE BARRIER WALL WHEN SPAN BETWEEN BENT SUPPORTS OR PIER COLUMNS EXCEEDS 13'

'S' Feet	REINFORCED CONCRETE BARRIER WALL APPLICATIONS
> 13'	'Reinforced Concrete Barrier Wall (Shoulder)' With Flush Shoulders; Or, Section 'TT' Or Section 'QQ' With Curb & Gutter
Barrier wall footings that conflict with bent or pier foundations shall be modified as described in the plans.	

CONCRETE BARRIER WALL WHEN GUARDRAIL OFFSET FROM BENT OR PIER LESS THAN 3 FEET OR WHERE WALL STEM ABUTS SUPPORTS OR PIER COLUMN

LAST REVISION	REVISION	DESCRIPTION:		FDOT DESIGN STANDARDS 2013	CONCRETE BARRIER WALL	INDEX NO.	SHEET NO.
00						410	22

C:\d\projects\standards\roadway\00400-s\00410-22of25.dgn
rd960rh
1:59:50 PM
6/28/2012

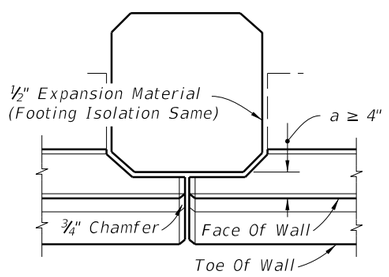

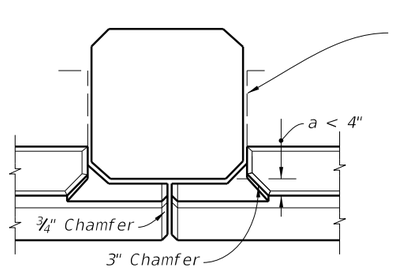

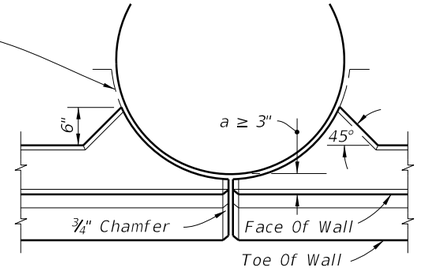

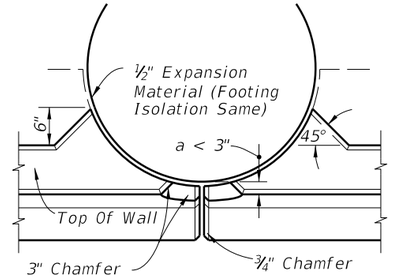

TOP VIEWS

'a' Varies (Circular Or Octagonal Hazard Not More Than 2" In Front Of Face Of Wall).
Applicable To Sections 'AA' And 'BB' With Spans Of ≤ 13', And To Section 'CC', Sheet No. 21.
Applicable To Other Rigid Walls Of This Index For Spans > 13' Unless Otherwise Shown In The Plans.

HAZARD PENETRATING STEM OF RIGID CONCRETE BARRIER WALLS

The details on sheets 22 & 23 are treatments to the F-shape concrete barrier walls depicted on Sheet Nos. 9 through 19, where site conditions impose reduced clearances between above ground hazards and the walls. Bridge bent supports and piers are shown. These treatments are not applicable to hazards that cannot provide lateral support for the walls. See the plans for limits of wall sections applied and other associated wall treatments.

6/28/2012 1:59:52 PM rd960rh C:\d\projects\standards\roadway\00400-s\00410-23of25.dgn

LAST REVISION	REVISION	DESCRIPTION:		FDOT DESIGN STANDARDS 2013	CONCRETE BARRIER WALL	INDEX NO.	SHEET NO.
07/01/07						410	23

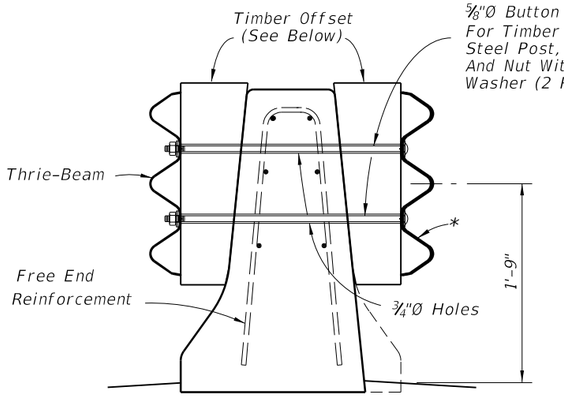

SECTION AA

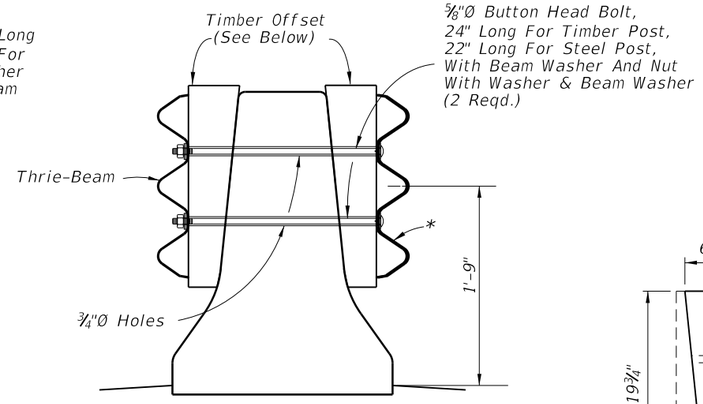

SECTION BB

NOTE: See Sheet 25 For Locations Of Sections.

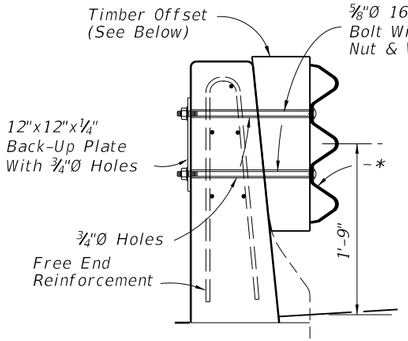

SECTION CC

* Single Thrie-Beam On Trailing Ends Of Barrier Wall; Nested Thrie-Beams On Approaches To Barrier Wall.

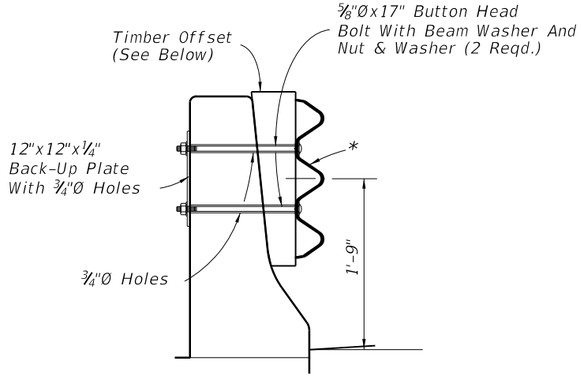

SECTION DD

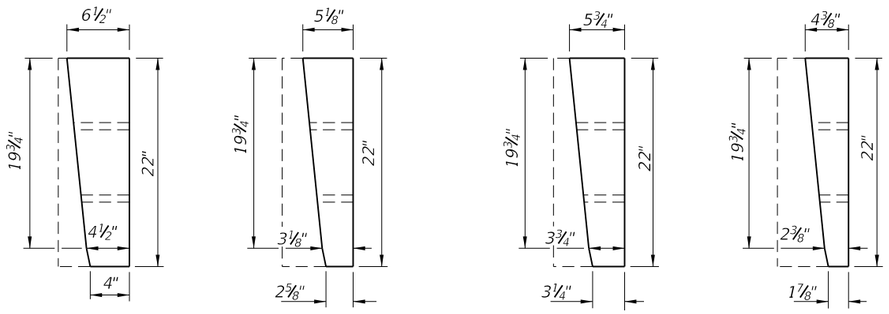

AA & CC — BB & DD — AA — BB

FOR DOUBLE FACED GUARDRAIL USING TIMBER POSTS AND FOR SINGLE FACED GUARDRAIL USING EITHER TIMBER OR STEEL POSTS

FOR DOUBLE FACED GUARDRAIL USING STEEL POSTS

STANDARD TIMBER OR PLASTIC OFFSET BLOCKS • FIELD TRIMMED
FOR USE AT SECTIONS AA, BB, CC & DD

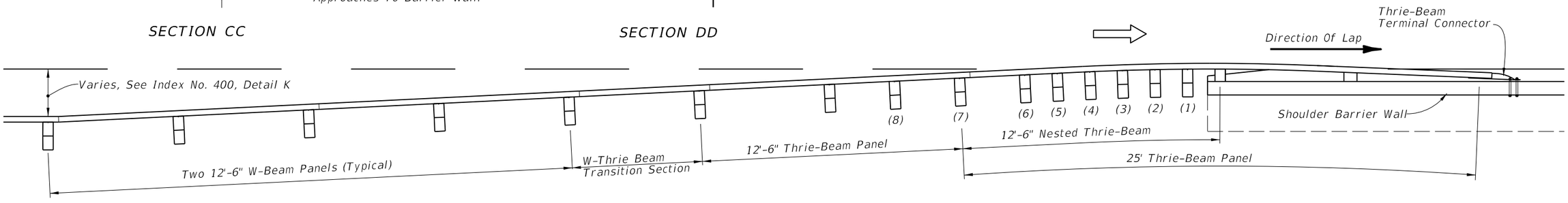

STANDARD GUARDRAIL APPROACH TO SHOULDER BARRIER

TRANSITION SECTION NOTES

1. The longitudinal dimensions and payment limits shown for median concrete barrier wall also apply to shoulder concrete barrier walls.
2. W-beam elements do not apply to these transition schemes. For barrier wall trailing end guardrail connections for one-way lanes, see Sheet 2.
3. Where reaming is necessary to fit nested beams the reamed surfaces shall be metalized in accordance with Section 562 of the Standard Specifications.
4. Either steel or timber guardrail post may be used, timber posts shown.
5. The nested beams shall not be bolted to blocks and posts at posts numbers (1), (3) and (5).
6. On the trailing side of MEDIAN BARRIER WALL, offset blocks may be omitted at posts numbers (1), (2), (3), (5), (6) and (8). (See Sheet 25)
7. For additional guardrail information refer to Index No. 400.

GUARDRAIL CONNECTION TO CONCRETE BARRIER WALL APPROACH ENDS

C:\d\projects\standards\roadway\00400-s\00410-24of25.dgn rd960rh 1:59:54 PM 6/28/2012

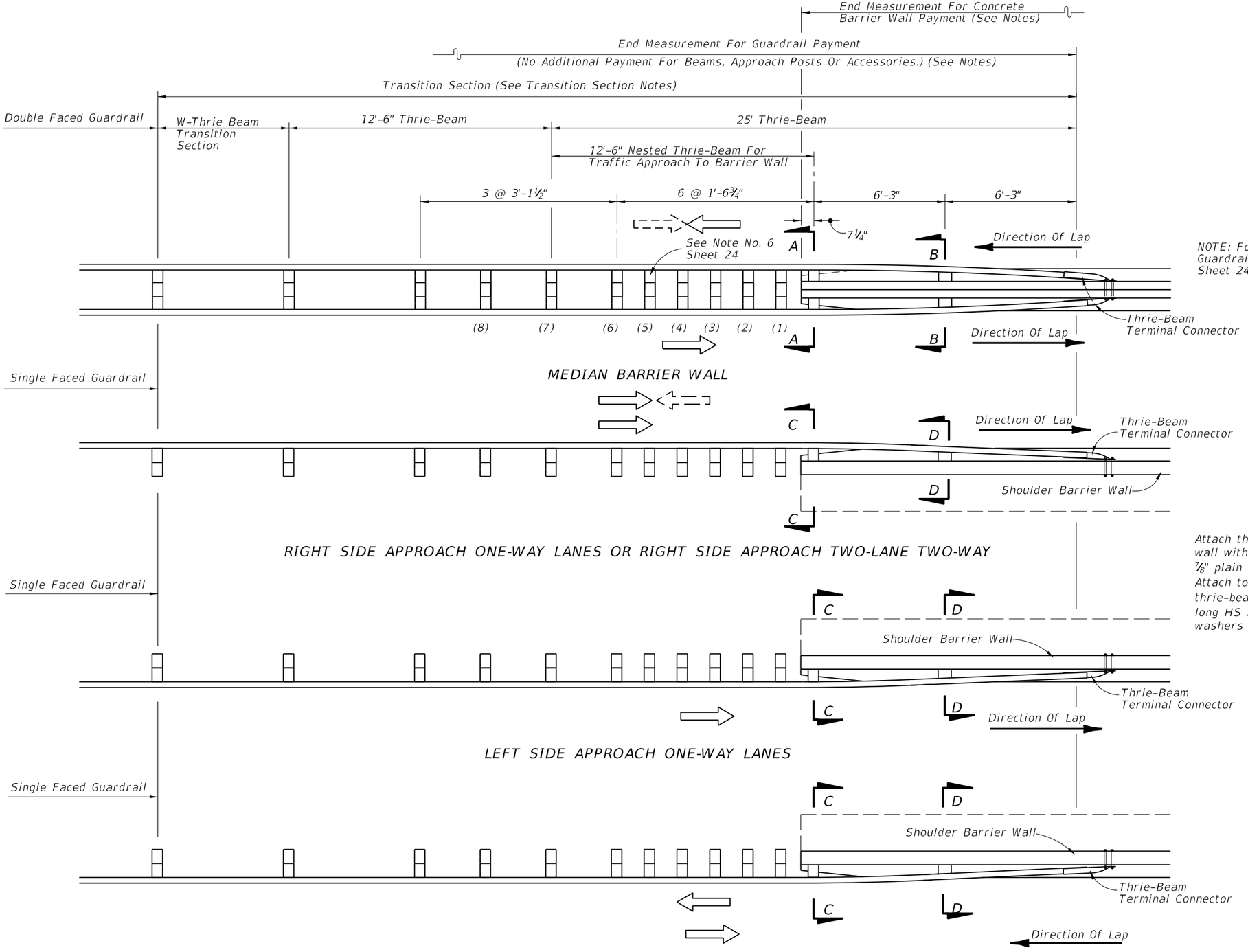

NOTE: For Section AA, BB, CC and DD Guardrail and Offset Block Views, See Sheet 24

Attach thrie-beam terminal connector to median barrier wall with 5-⅞"x15" long HS hex bolts and nuts with ⅞" plain round washers under heads and nuts. Attach to shoulder barrier wall with a 21"x12"x⅝" thrie-beam terminal connector plate and 5-⅞"x12" long HS hex bolts and nuts with ⅞" plain round washers under heads and nuts.

GUARDRAIL CONNECTION TO CONCRETE BARRIER WALL APPROACH ENDS

C:\d\projects\standards\roadway\00400-s\00410-25of25.dgn
rd960rh
1:59:56 PM
6/28/2012

LAST REVISION	REVISION	DESCRIPTION:			INDEX NO.	SHEET NO.
00			FDOT DESIGN STANDARDS 2013	CONCRETE BARRIER WALL	410	25

This Pier Protection Barrier has been structurally evaluated to be equivalent or greater in strength to other safety shape traffic barriers which have been crash tested to NCHRP Report 350 TL-5 criteria. This barrier meets the requirements of the AASHTO LRFD Bridge Design Specifications for a barrier used for bridge pier protection.

GENERAL NOTES

1. Concrete shall be Class III or IV unless otherwise called for in the plans. Exposed concrete surfaces shall have a Class 3 surface finish in accordance with Section 521 of the Specifications, unless another finish is called for in the plans. The surfaces shall have a Class 5 Applied Finished Coating in accordance with Section 400 only when called for in the plans.
2. Construct Pier Protection Barrier continuous without transverse contraction or expansion joints. Transverse construction joints may be used at a spacing greater than or equal to 40'. Provide longitudinal reinforcing steel continuous across construction joints.
3. When the Pier Protection Barrier is installed adjacent to Roadway or Shoulder pavement, compact the top 12" of the subgrade to at least 98% of the maximum density determined by FM 1-T 180, Method D.
4. Isolate Barrier Wall Inlets, Index 218, from Pier Protection Barriers and Footings with 1" expansion material.
5. On roadways designated for reverse laning, mark all downstream barrier ends that are not shielded or outside the clear zone with Type 3 Object Markers. Include the cost of the Object Marker in the cost of the Pier Protection Barrier.
6. Payment: Pier Protection Barrier and Crash Wall to be paid for under the contract unit price for Shoulder Concrete Barrier Wall (Rigid-Shoulder 42"), LF, or Shoulder Concrete Barrier Wall (Rigid-Shoulder 54"), LF.
7. Provide 3/8" deep crack control V-grooves at 15' to 30' spacing. Locate V-grooves above any joint or discontinuity in the barrier footing. Align V-Grooves perpendicular to the longitudinal axis of the Pier Protection Barrier and make continuous across the top surface and both side faces. For slip formed barriers, score 3/8" V-Grooves while the concrete is still plastic, otherwise pre-form the joints when stationary forms are utilized.

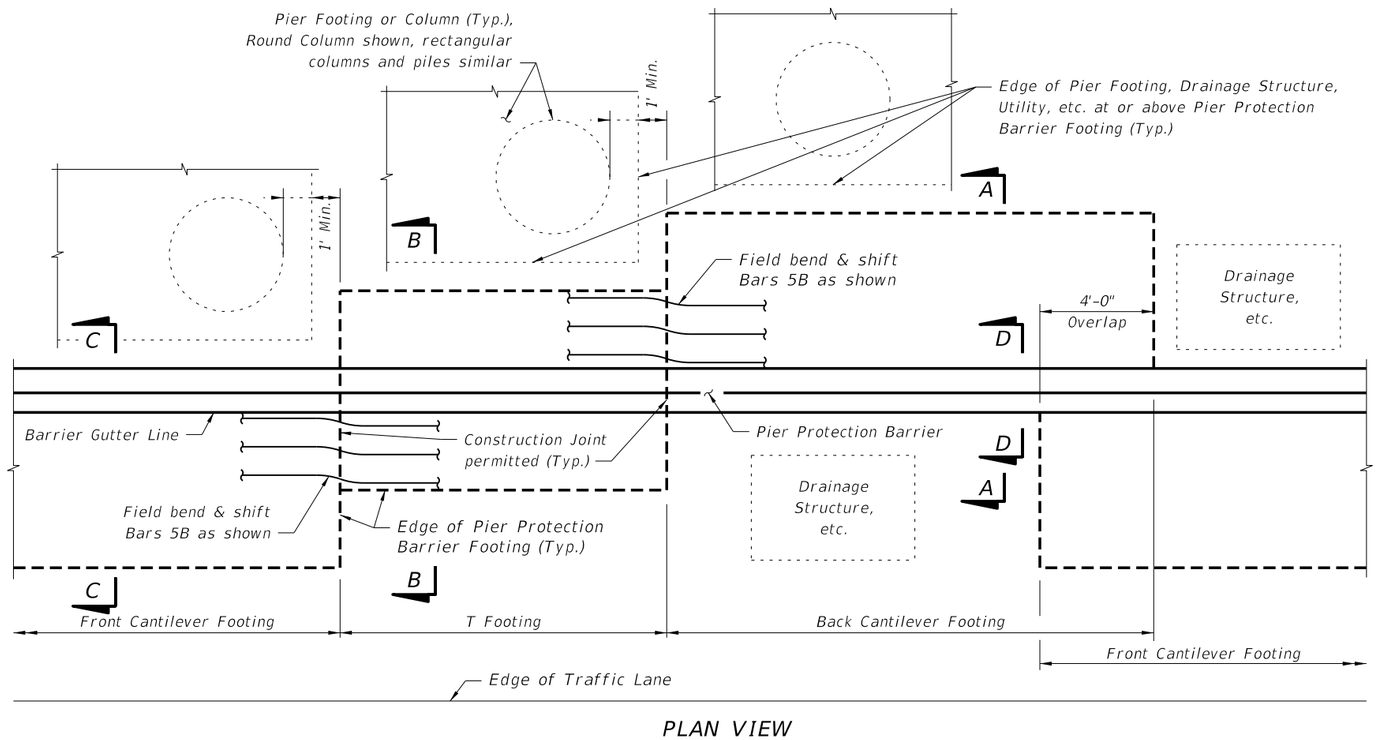

PLAN VIEW

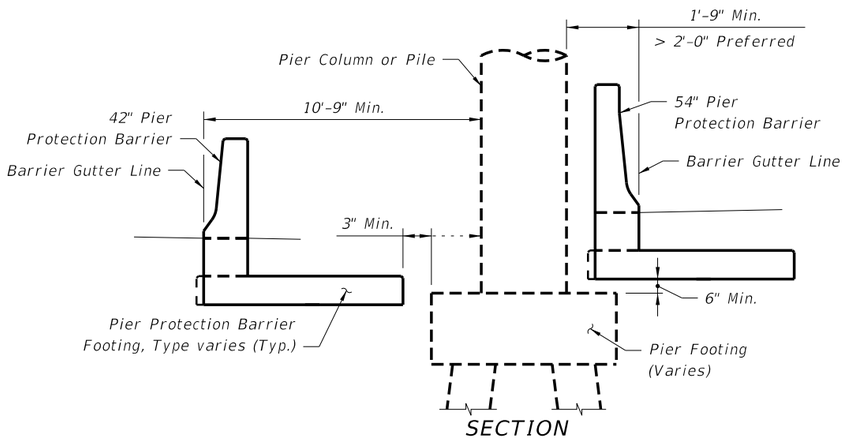

SECTION

PIER PROTECTION BARRIER FOOTING LAYOUT SCHEMATICS

LAST REVISION	REVISION	DESCRIPTION:			INDEX NO.	SHEET NO.
01/01/12			FDOT DESIGN STANDARDS 2013	PIER PROTECTION BARRIER	411	1

C:\d\projects\standards\roadway\00400-s\00411-01.dgn rd960rh 1:59:58 PM 6/28/2012

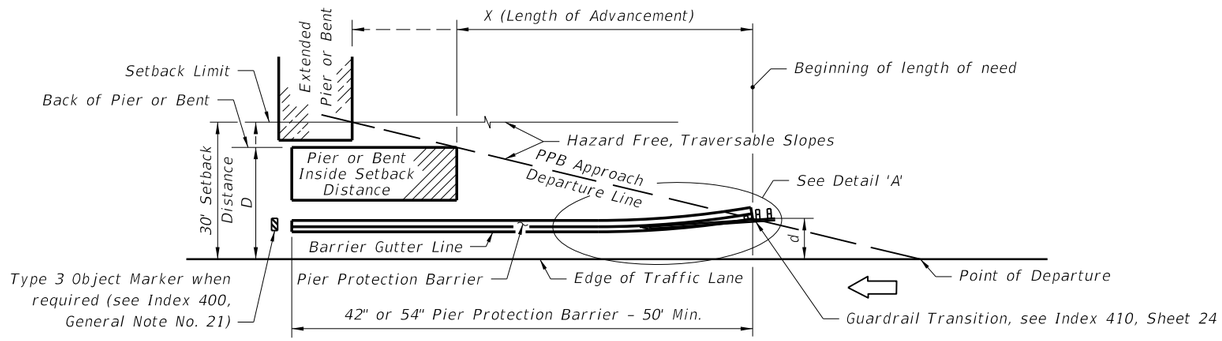

(LEFT SIDE OPPOSITE HAND)
ONE-WAY TRAFFIC

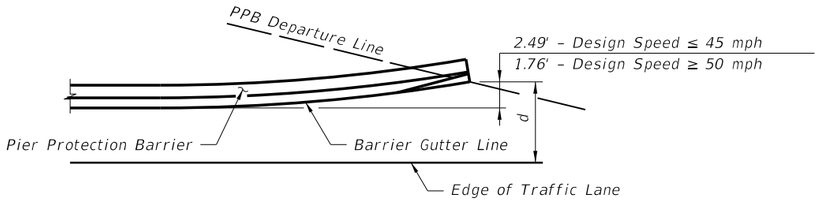

DETAIL 'A'
(Guardrail not shown for clarity)

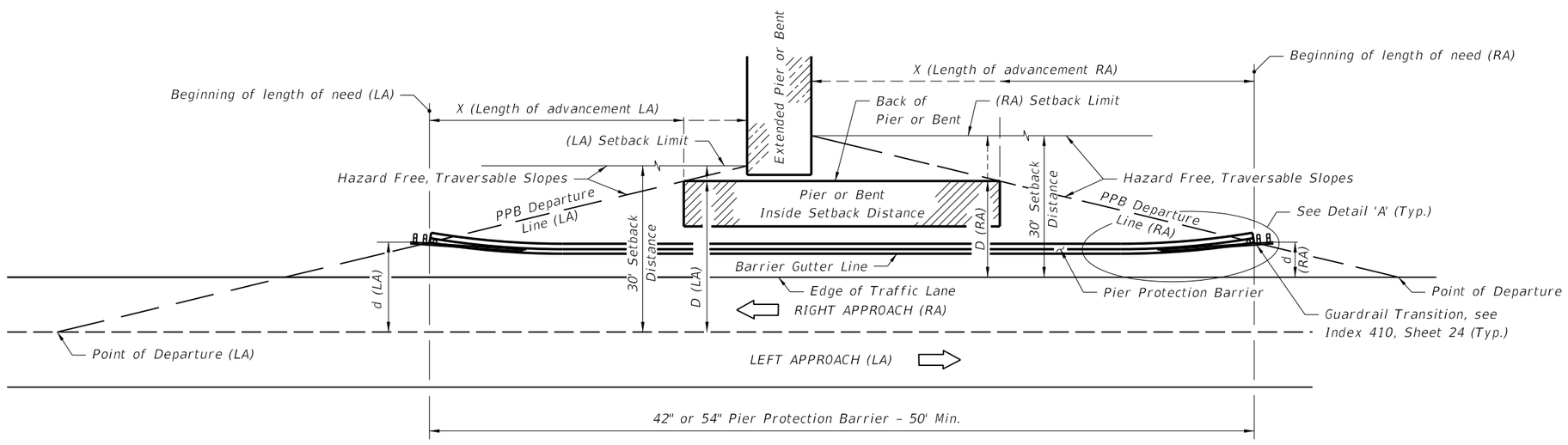

TWO-LANE TWO-WAY TRAFFIC

Design Speed mph	X (Length of Advancement) Ft.
≤45	= 16 (D–d)
≥50	= 13 (D–d)

NOTE:

Length of Advancement determined from the diagrams and equations shown establishes the location of the upstream beginning length of need for a Pier Protection Barrier, however, the Length of Advancement for the combination of Pier Protection Barrier and required guardrail can be no less than that required by other details of Index 400.

Equation Variables:

D = Distance in feet from the near edge of the near approach traffic lane to either (a) the back of pier, when the pier is located inside the Setback Distance or (b) the Setback Distance, when the pier extends to or goes beyond the Setback Distance. For left side piers on two-way undivided facilities, D is measured from the inside edge of the near approach traffic lane.

d = Distance in feet from the near edge of the near approach traffic lane to the Pier Protection Barrier gutter line at its intersection with the departure line or the face of guardrail at its intersection with the departure line. For left side hazards on two-way undivided facilities, d is measured from the inside edge of the near approach traffic lane.

NOTE:
See Index 400 for Clear Zone and Horizontal Clearance Length of Advancement Diagrams.

PPB = Pier Protection Barrier

LENGTH OF ADVANCEMENT DIAGRAMS - PIER PROTECTION BARRIER WITH GUARDRAIL CONTINUATION

C:\d\projects\standards\roadway\00400-s\00411-02.dgn
rd960rh
2:00:01 PM
6/28/2012

LAST REVISION	REVISION	DESCRIPTION:				
07/01/09			FDOT DESIGN STANDARDS 2013	PIER PROTECTION BARRIER	INDEX NO. 411	SHEET NO. 2

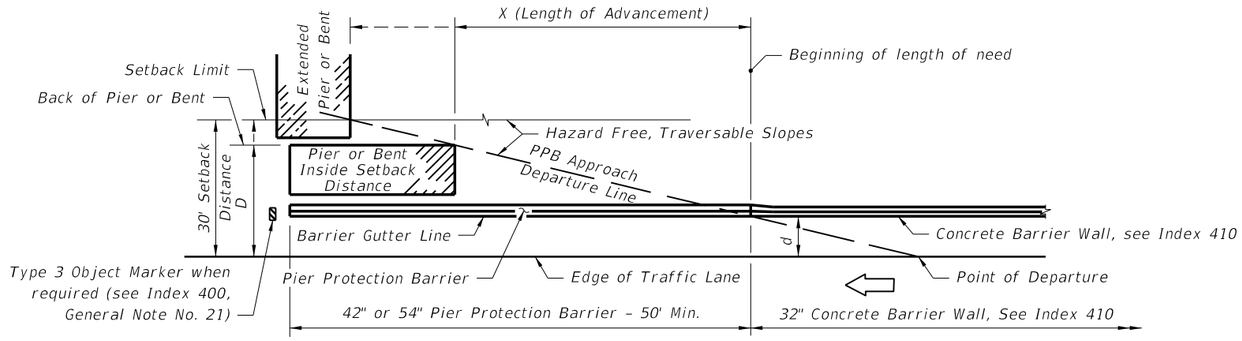

(LEFT SIDE OPPOSITE HAND)
ONE-WAY TRAFFIC

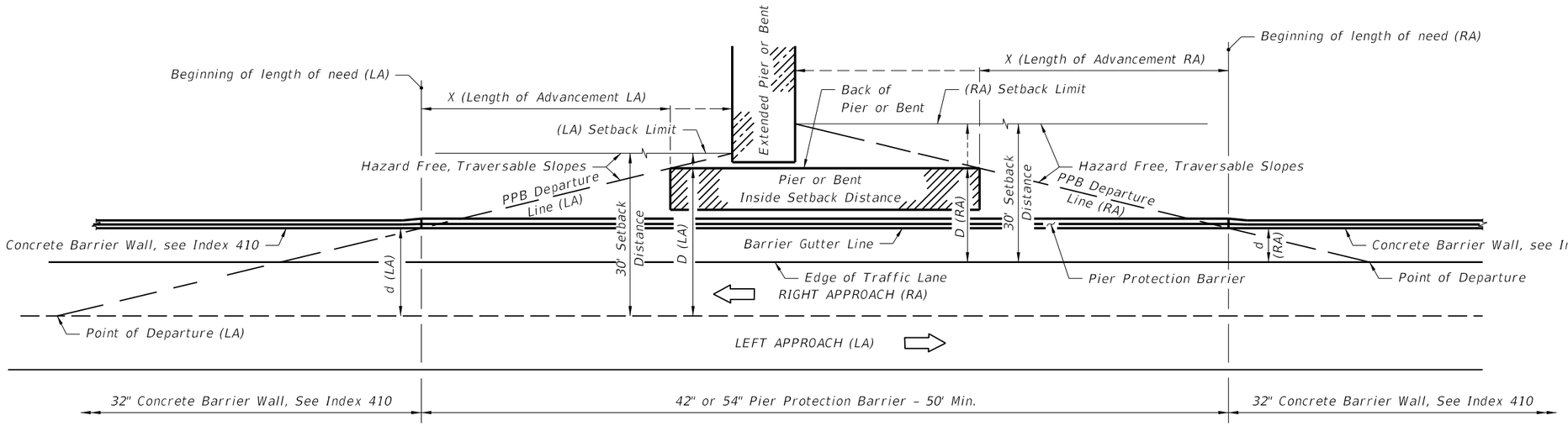

TWO-LANE TWO-WAY TRAFFIC

NOTES:
See Index 400 for Clear Zone and Horizontal Clearance Length of Advancement Diagrams.
PPB = Pier Protection Barrier

See Notes on Sheet 2.

LENGTH OF ADVANCEMENT DIAGRAMS - PIER PROTECTION BARRIER WITH CONCRETE BARRIER WALL CONTINUATION

C:\d\projects\standards\roadway\00400-s\00411-03.dgn
rd960rh
2:00:03 PM
6/28/2012

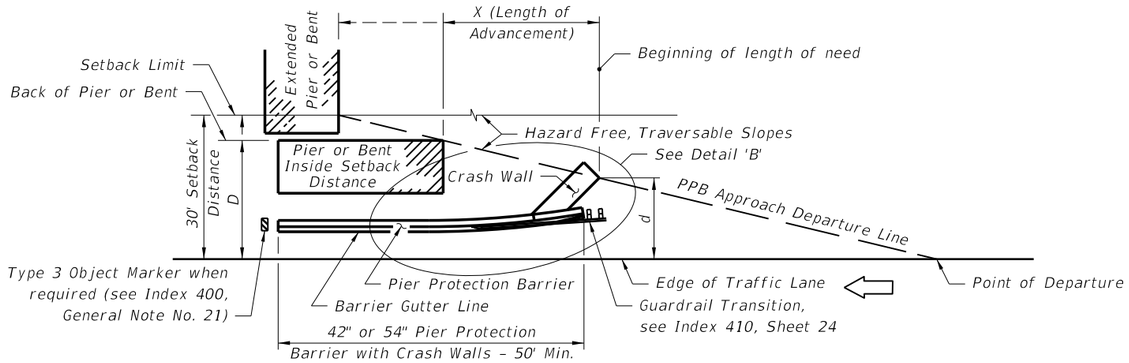

(LEFT SIDE OPPOSITE HAND)
ONE-WAY TRAFFIC

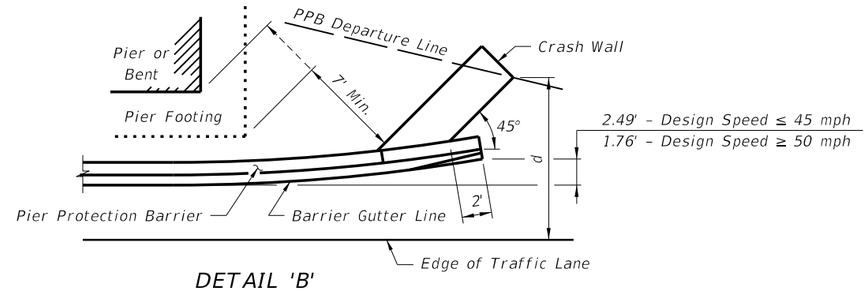

DETAIL 'B'
(Guardrail not shown for clarity)

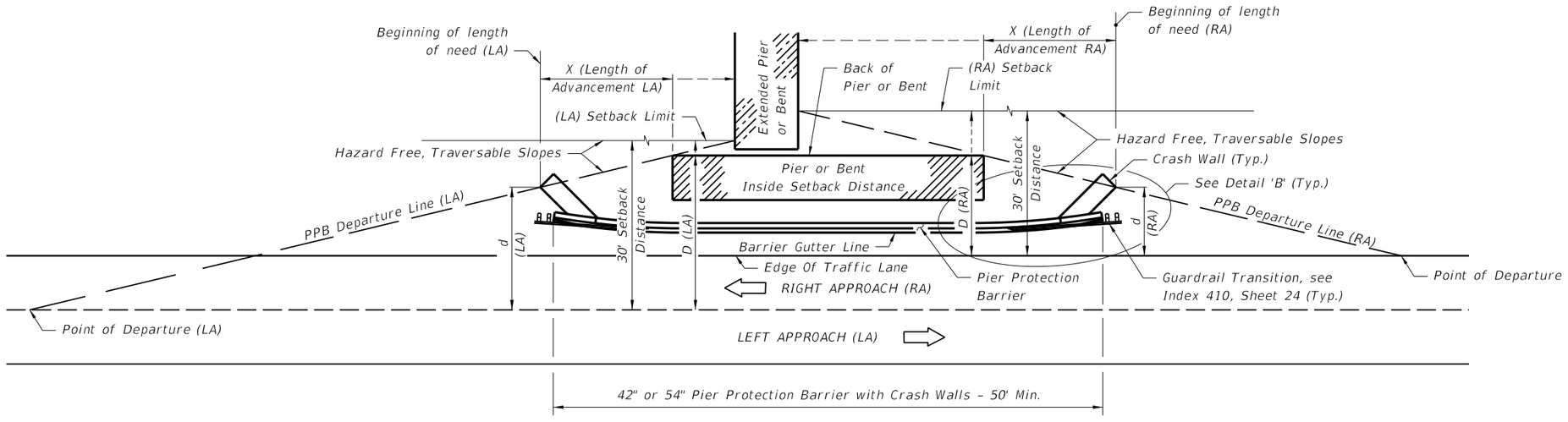

TWO-LANE TWO-WAY TRAFFIC

NOTES:
See Index 400 for Clear Zone and Horizontal Clearance Length of Advancement Diagrams.
PPB = Pier Protection Barrier

See Notes on Sheet 2.

LENGTH OF ADVANCEMENT DIAGRAMS - PIER PROTECTION BARRIER WITH CRASH WALL AND GUARDRAIL CONTINUATION

LAST REVISION	REVISION	DESCRIPTION:		FDOT DESIGN STANDARDS 2013	PIER PROTECTION BARRIER	INDEX NO.	SHEET NO.
07/01/09						411	4

6/28/2012 2:00:05 PM rd960rh C:\d\projects\standards\roadway\00400-s\00411-04.dgn

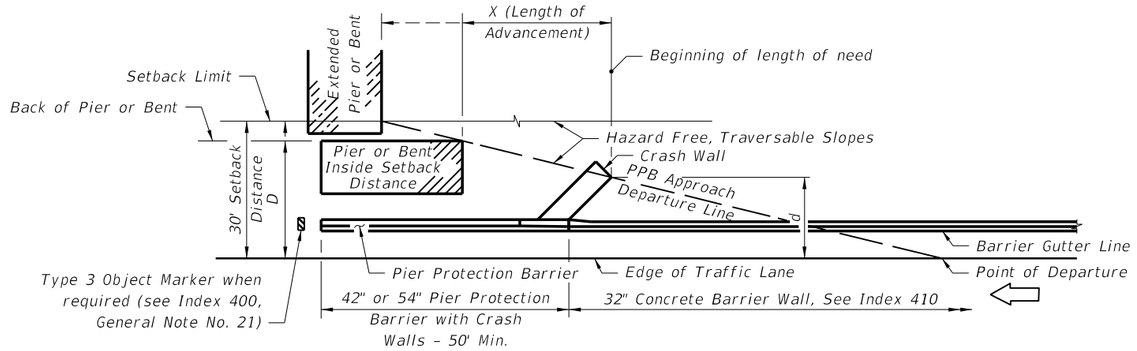

(LEFT SIDE OPPOSITE HAND)
ONE-WAY TRAFFIC

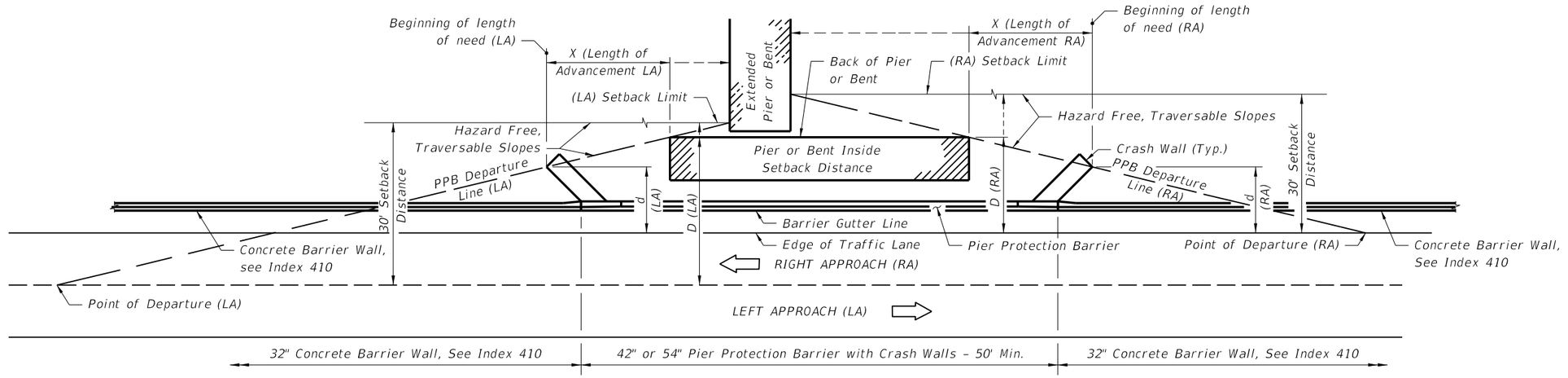

TWO-LANE TWO-WAY TRAFFIC

NOTES:
See Index 400 for Clear Zone and Horizontal Clearance Length of Advancement Diagrams.
PPB = Pier Protection Barrier

See Notes on Sheet 2.

LENGTH OF ADVANCEMENT DIAGRAMS - PIER PROTECTION BARRIER WITH CRASH WALL AND CONCRETE BARRIER WALL CONTINUATION

C:\d\projects\standards\roadway\00400-s\00411-05.dgn
rd960rh
2:00:07 PM
6/28/2012

* 12"x12"x¼" galvanized steel back-up plate with ⅝" post bolts (either 17" or 21" long) and nuts with ⅝" plain round washers under nuts.

** Attach thrie-beam terminal connector to Pier Protection Barrier with a 21"x12"x⅝" thrie-beam terminal connector plate and 5-⅞"x15" long HS hex bolts and nuts with ⅞" plain round washers under heads and nuts.

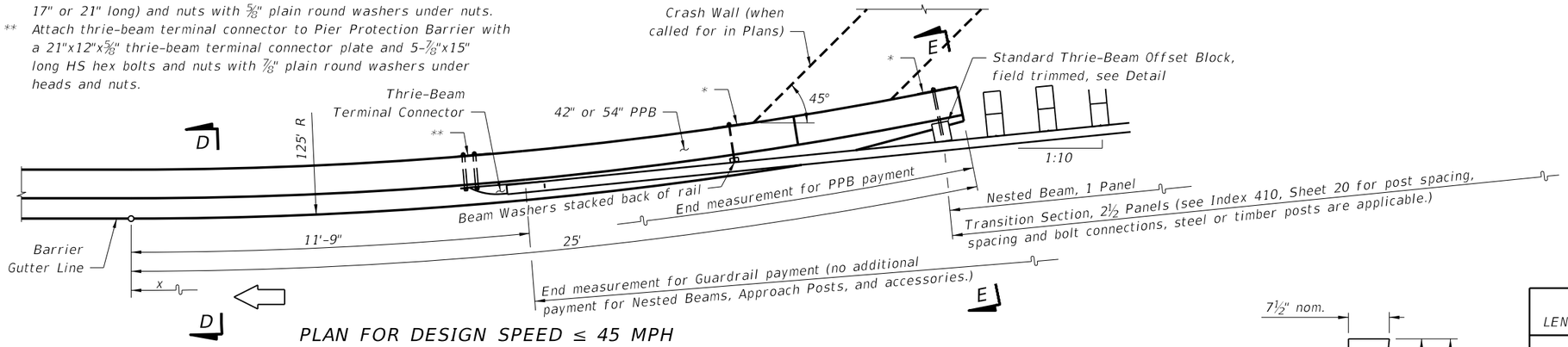

PLAN FOR DESIGN SPEED ≤ 45 MPH

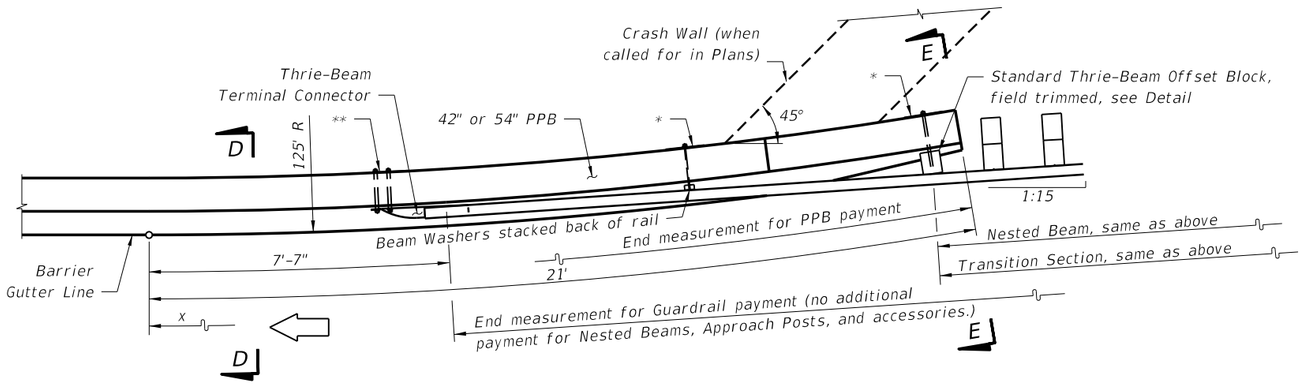

PLAN FOR DESIGN SPEED ≥ 50 MPH

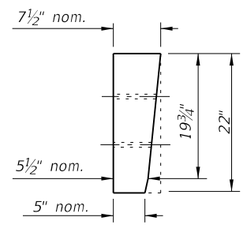

FOR USE WITH EITHER 1:10 OR 1:15 GUARDRAIL TRANSITIONS

STANDARD THRIE-BEAM OFFSET BLOCK (FIELD TRIMMED)

NOTES

1. The Pier Protection Barrier radial segments are intended for use on approach and trailing ends of both one-way and two-way facilities. The guardrail connections shown on this sheet apply to one-way approaches and to the approaching and trailing ends of two-lane two-way facilities. On trailing ends of two-way multilane and one-way facilities the end connection on Index 410, Sheet 2 may be used.

   For guardrail connections, see Index 410, Sheet 20.

2. Refer to Index No. 400 Detail J for additional guardrail information.

ARC LENGTH (Ft.)	DISTANCE "x" (Ft.)	OFFSETS "y" "y" (Ft.)
4	4.00	0.06
8	7.99	0.26
12	11.98	0.58
16	15.96	1.02
20	19.91	1.60
21	20.91	1.76
24	23.85	2.30
25	24.83	2.49

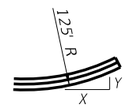

Note: Barrier may be constructed in chords having lengths ≤4 feet.

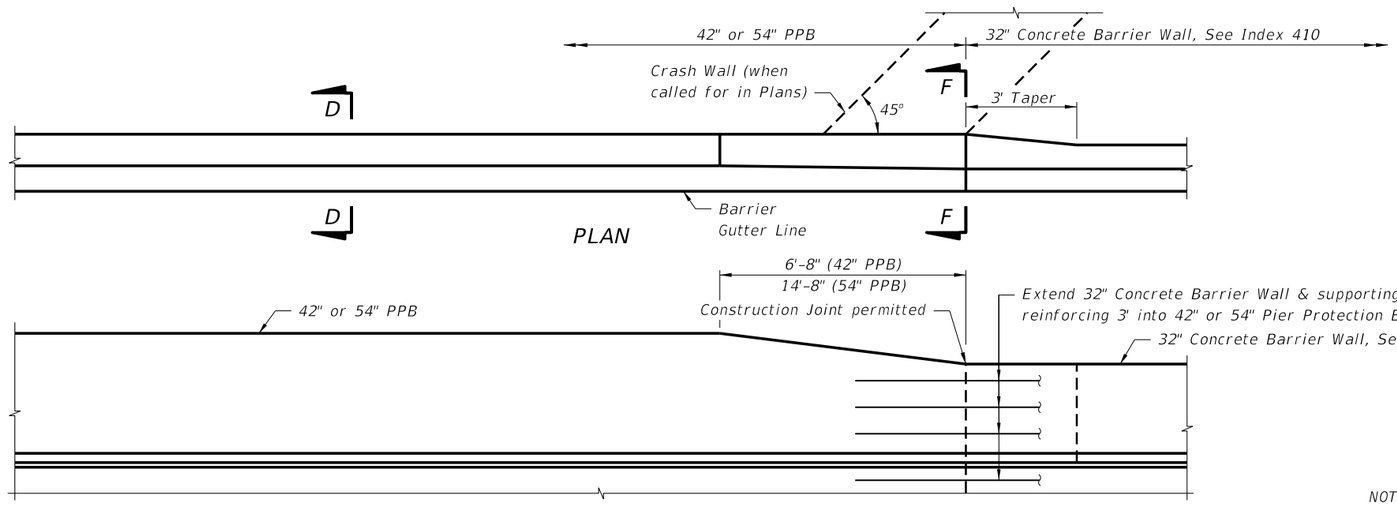

NOTE:
PPB = Pier Protection Barrier.

END TREATMENT - PIER PROTECTION BARRIER WITH CONCRETE BARRIER WALL CONTINUATION

FLARED END TREATMENT - PIER PROTECTION BARRIER WITH GUARDRAIL CONTINUATION

LAST REVISION	REVISION	DESCRIPTION:	FDOT DESIGN STANDARDS 2013	PIER PROTECTION BARRIER	INDEX NO.	SHEET NO.
07/01/06					411	6

C:\d_projects\standards\roadway\00400-s\00411-06.dgn rd960rh 2:00:09 PM 6/28/2012

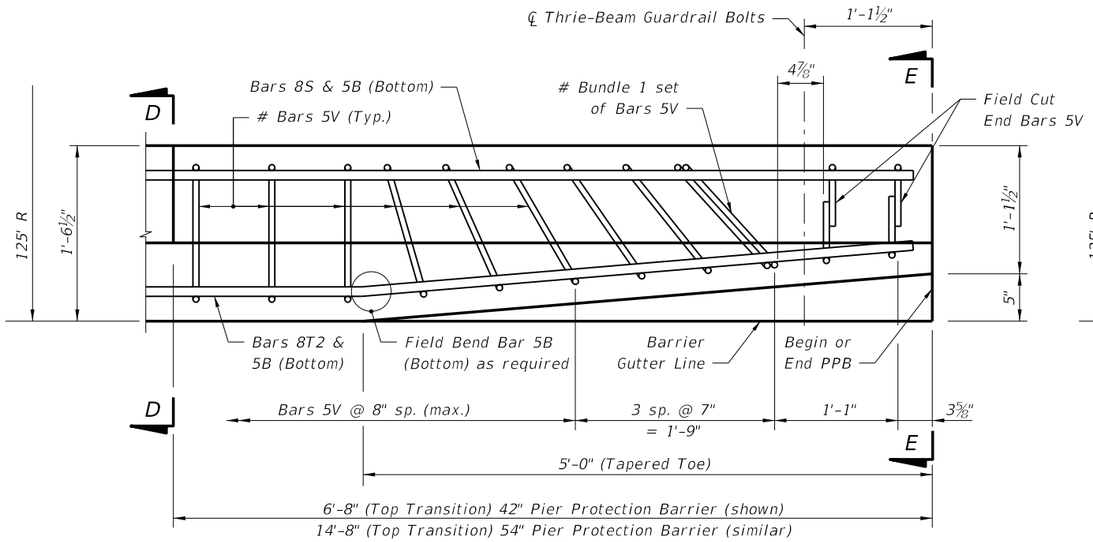

PLAN

(Showing Bars 5V, 8S, 5B & 8T2)

Rotate Bars 5V as shown to maintain clearance.

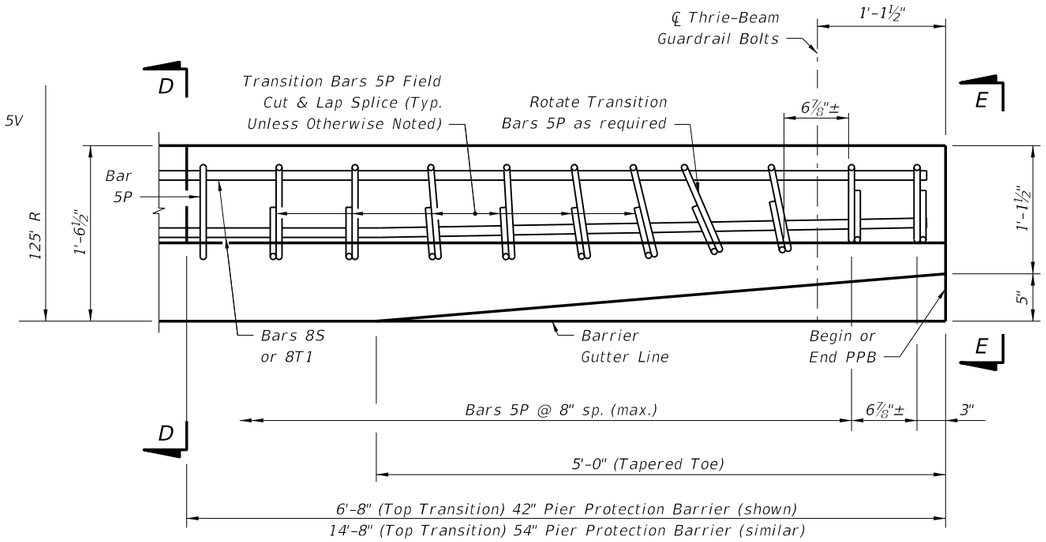

PLAN

(Showing Transition Bars 5P and Bars 8S & 8T1)

END TRANSITION AND TAPERED TOE DETAILS - PIER PROTECTION BARRIER WITH GUARDRAIL CONTINUATION

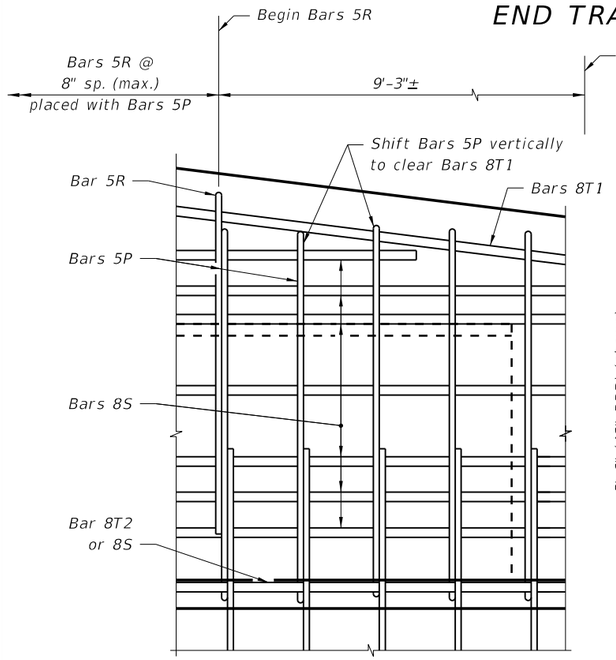

PARTIAL ELEVATION - 54" PPB DETAIL

NOTE:
Lap Bars 8T1 and 8T2 with Bars 8S (4'-0" min. Lap Splice).

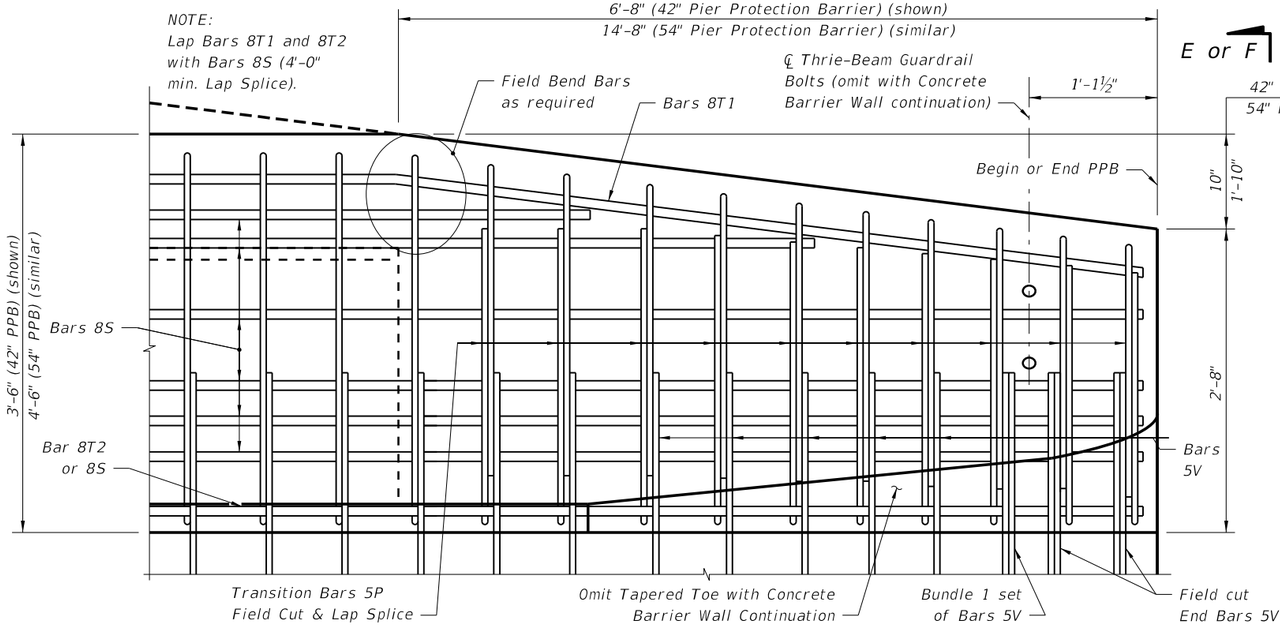

NOTES:
1. See Sheet 9 for Footing Details.
2. See Sheet 8 for Cross Sections.

ESTIMATED 42" PPB QUANTITIES		
ITEM	UNIT	QUANTITY
Concrete	CY/LF	0.141
Reinforcing Steel (w/out Bars 5V)	LB/LF	33.10

ESTIMATED 54" PPB QUANTITIES		
ITEM	UNIT	QUANTITY
Concrete	CY/LF	0.172
Reinforcing Steel (w/out Bars 5V)	LB/LF	48.74

NOTE:
PPB = Pier Protection Barrier.

ELEVATION - BARRIER END TRANSITION - 42" PPB (shown); 54" PPB (similar)

(Guardrail and back leg of Stirrups not shown for clarity)

END TRANSITION DETAILS - PIER PROTECTION BARRIER WITH GUARDRAIL OR CONCRETE BARRIER WALL CONTINUATION

C:\d\projects\standards\roadway\00400-s\00411-07.dgn
rd960rh
2:00:12 PM
6/28/2012

LAST REVISION	REVISION	DESCRIPTION:				
07/01/06			FDOT DESIGN STANDARDS 2013	PIER PROTECTION BARRIER	INDEX NO. 411	SHEET NO. 7

BILL OF REINFORCING STEEL

MARK	SIZE	LENGTH
P	5	7'-6"
R	5	6'-7"
S	8	As Reqd.
42" PPB T1 & T2	8	13'-0"
54" PPB T1 & T2	8	21'-0"
V	5	9'-2"

REINFORCING STEEL NOTES:
1. All bar dimensions in the bending diagrams are out to out.
2. Bars 8S may be continuous or spliced at the construction joints. Lap splices for Bars 8S shall be a minimum of 4'-0".
3. The Contractor may utilize Welded Wire Reinforcement when approved by the Engineer. Welded Wire Reinforcement shall conform to ASTM A497.

NOTE: PPB = Pier Protection Barrier

CONVENTIONAL REINFORCING STEEL BENDING DIAGRAMS

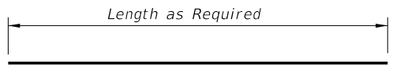

BARS 8S

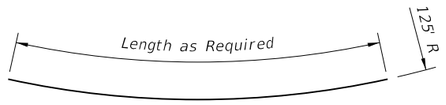

BARS 8S
(within Flared End Treatments)

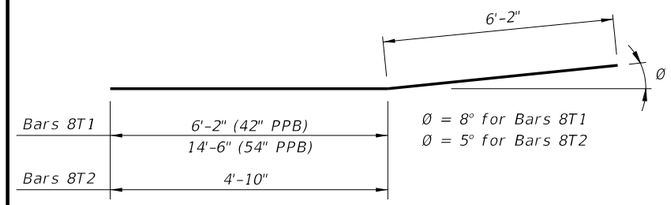

TRANSITION BARS 8T1 & 8T2

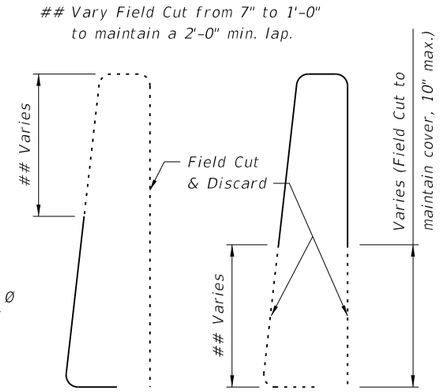

TRANSITION STIRRUP BARS 5P
To Be Field Cut (10 of each required per Railing End Transition)

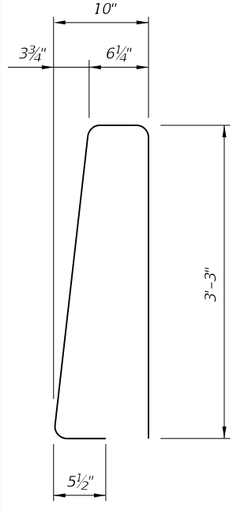

STIRRUP BAR 5P

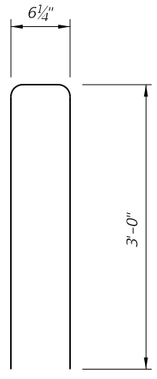

STIRRUP
BAR 5R

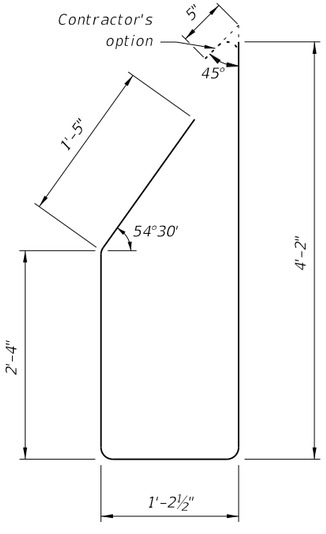

STIRRUP BAR 5V

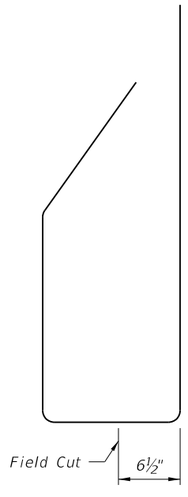

END STIRRUP BAR 5V
To Be Field Cut
(Two required per
Barrier End Transition
w/ Tapered Toe)

NOTES:
1. See Sheet 9 for Footing Details.
2. See Sheet 7 for bar spacings and details within End Transitions.

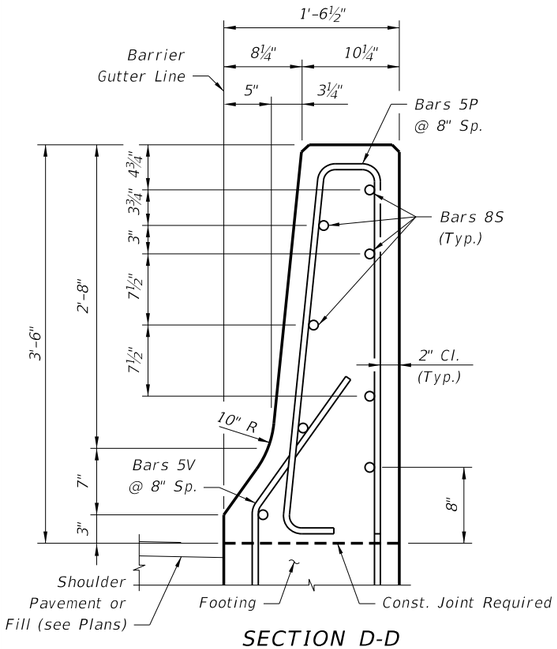

SECTION D-D
TYPICAL SECTION THRU
42" PIER PROTECTION BARRIER

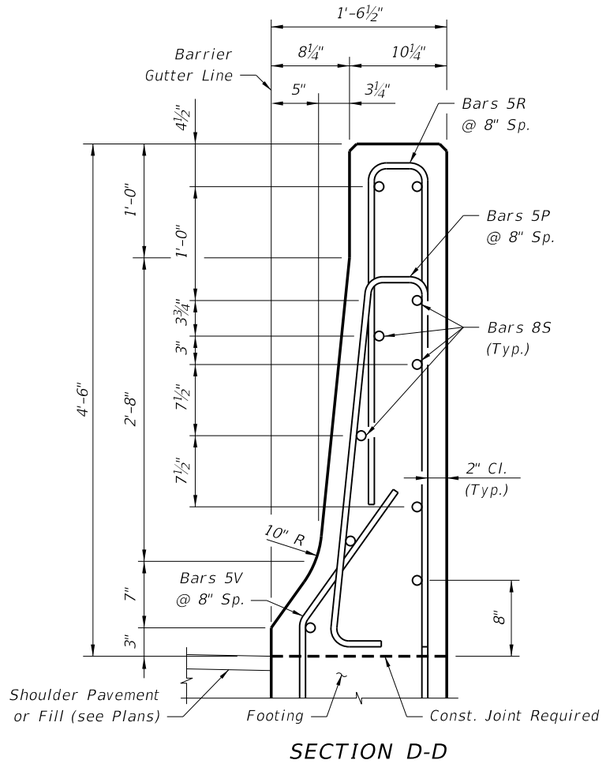

SECTION D-D
TYPICAL SECTION THRU
54" PIER PROTECTION BARRIER

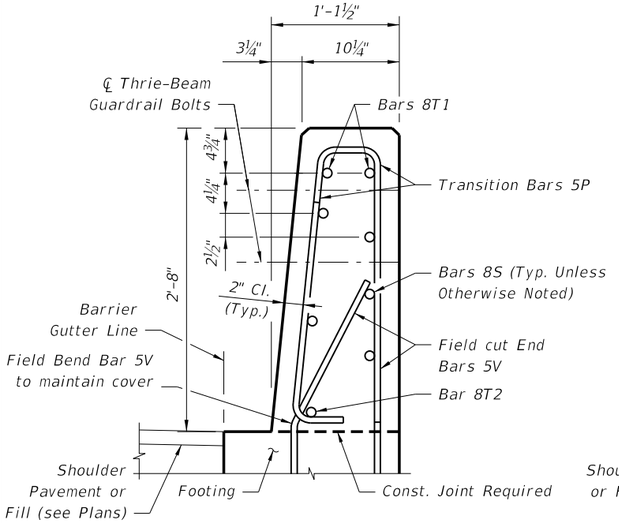

END VIEW E-E
(with Tapered Toe)

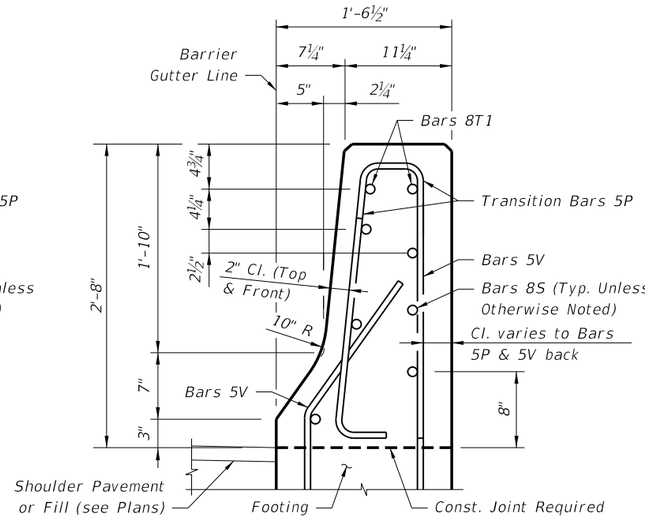

END VIEW F-F
(without Tapered Toe)

BARRIER DETAILS

LAST REVISION	REVISION	DESCRIPTION:	FDOT DESIGN STANDARDS 2013	PIER PROTECTION BARRIER	INDEX NO.	SHEET NO.
07/01/07					411	8

C:\d\projects\standards\roadway\00400-s\00411-08.dgn
rd960rh
2:00:14 PM
6/28/2012

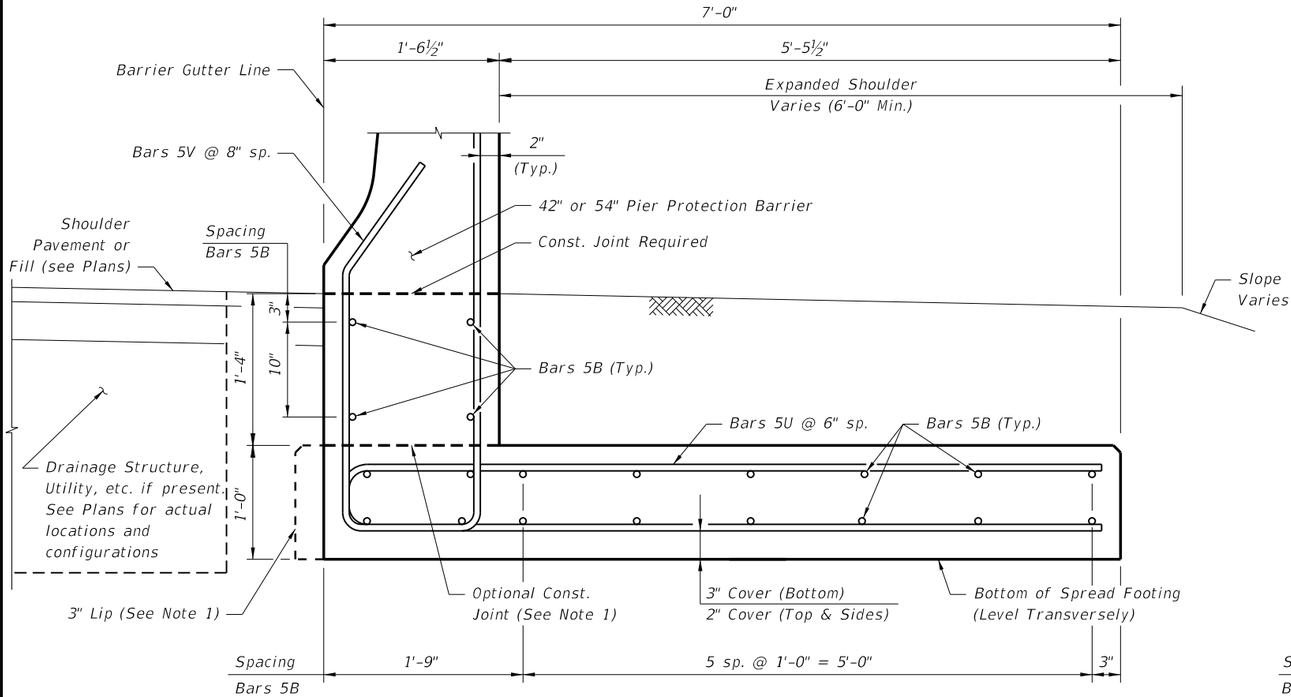

SECTION A-A TYPICAL SECTION THRU BACK CANTILEVER FOOTING

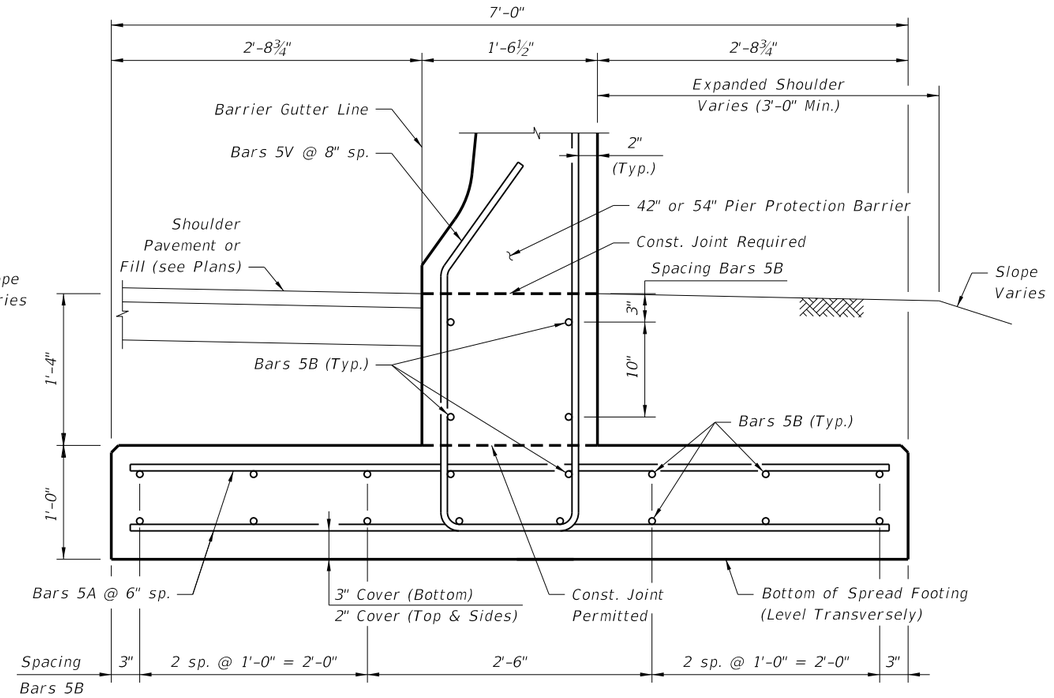

SECTION B-B TYPICAL SECTION THRU T FOOTING

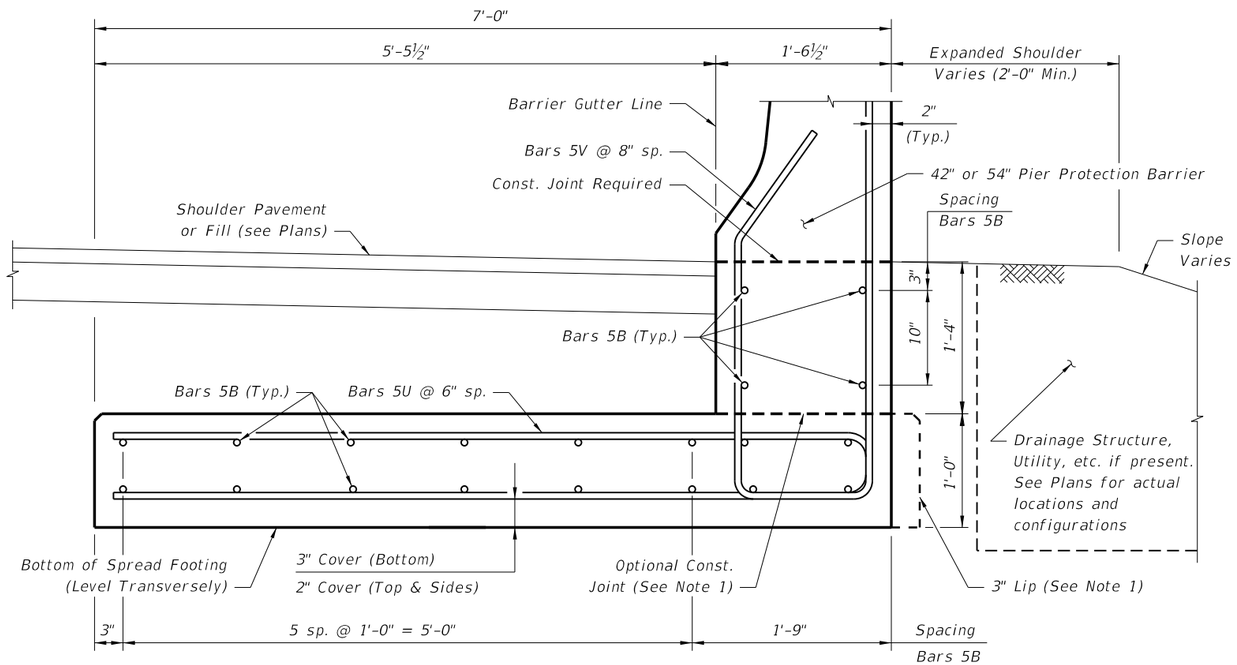

SECTION C-C TYPICAL SECTION THRU FRONT CANTILEVER FOOTING

BILL OF REINFORCING STEEL

MARK	SIZE	LENGTH
A	5	6'-8"
B	5	As Reqd.
U	5	14'-0"

REINFORCING STEEL NOTES:

1. All bar dimensions in the bending diagrams are out to out.
2. Lap splices for Bars 5B shall be a minimum of 2'-2".
3. The Contractor may use Welded Wire Reinforcement when approved by the Engineer. Welded Wire Reinforcement shall conform to ASTM A 497.

CONVENTIONAL REINFORCING STEEL BENDING DIAGRAMS

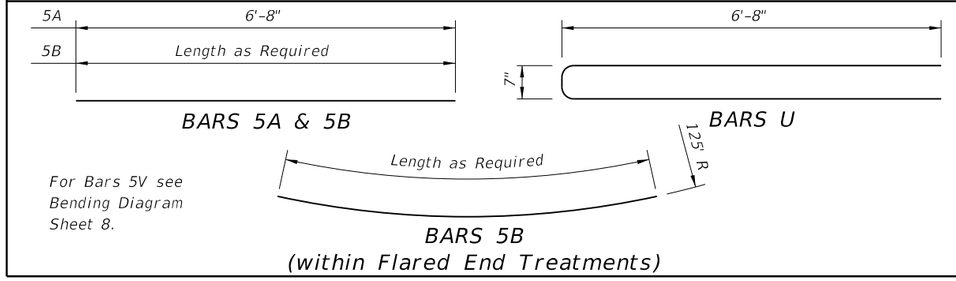

ESTIMATED BARRIER FOOTING QUANTITIES

ITEM	UNIT	QUANTITY
Concrete	CY/LF	0.335
Reinforcing Steel (w/ Bars 5V) Cantilever Footing	LB/LF	64.32
Reinforcing Steel (w/ Bars 5V) T Footing	LB/LF	63.01

NOTES:

1. Provide 3" lip when optional construction joint is used. Omit 3" lip adjacent to Barrier Wall Inlets and as required to provide 2" min. clear between Cantilever Footing and adjacent Pier Footing or Column.
2. See Sheets 7 & 8 for Barrier Details.

BARRIER FOOTING DETAILS

C:\d\projects\standards\roadway\00400-s\00411-09.dgn
rd960rh
2:00:16 PM
6/28/2012

LAST REVISION	REVISION	DESCRIPTION:				
07/01/07			FDOT DESIGN STANDARDS 2013	PIER PROTECTION BARRIER	INDEX NO. 411	SHEET NO. 9

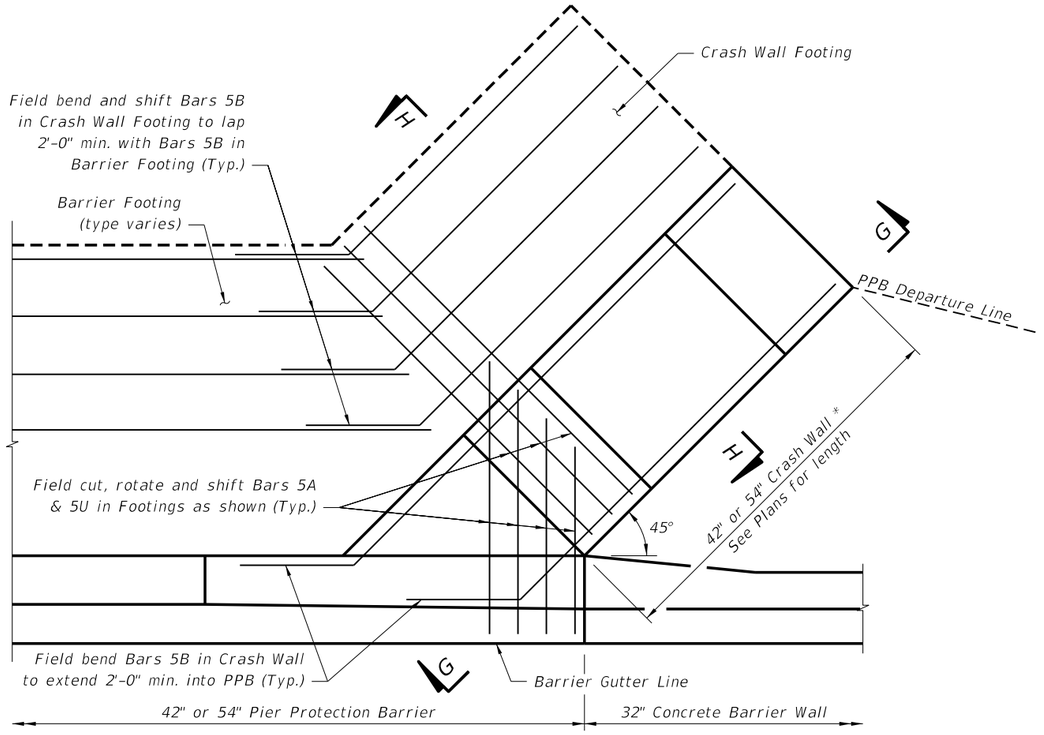

PLAN VIEW

(Concrete Barrier Wall Continuation shown, Guardrail Continuation similar)

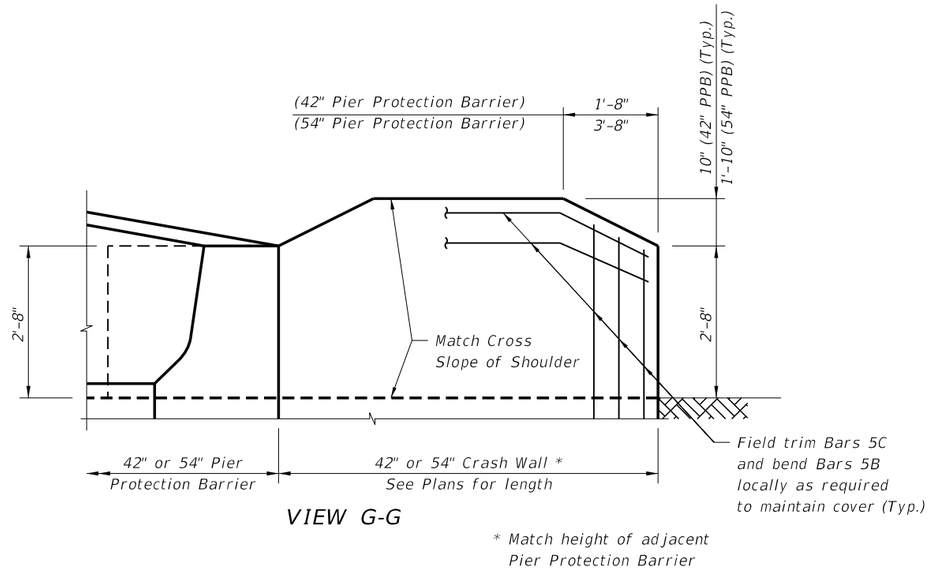

VIEW G-G

* Match height of adjacent Pier Protection Barrier

CONVENTIONAL REINFORCING STEEL BENDING DIAGRAMS

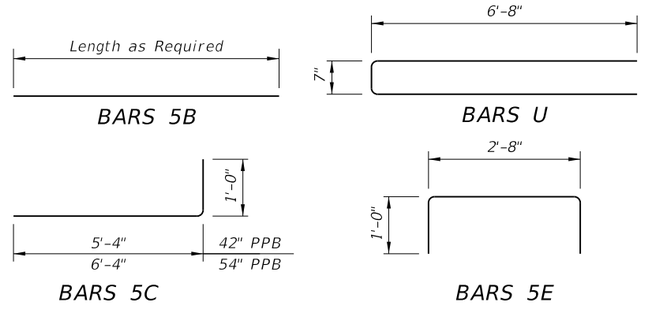

BILL OF REINFORCING STEEL

MARK	SIZE	LENGTH
B	5	As Reqd.
C	5	6'-4" / 7'-4"
E	5	4'-8"
U	5	11'-0"

REINFORCING STEEL NOTES:

1. All bar dimensions in the bending diagrams are out to out.
2. Lap splices for Bars 5B shall be a minimum of 2'-2".
3. The Contractor may use Welded Wire Reinforcement when approved by the Engineer. Welded Wire Reinforcement shall conform to ASTM A 497.

ESTIMATED CRASH WALL & FOOTING QUANTITIES

ITEM	UNIT	QUANTITY
Concrete (Footing)	CY/LF	0.260
Concrete (42" Crash Wall)	CY/LF	0.389
Concrete (54" Crash Wall)	CY/LF	0.500
Reinforcing Steel (42" Crash Wall)	LB/LF	66.06
Reinforcing Steel (54" Crash Wall)	LB/LF	70.23

NOTES:

1. Provide 3" lip when optional construction joint is used.
2. See Sheet 8 for Barrier Details and Sheet 9 for Barrier Footing details.

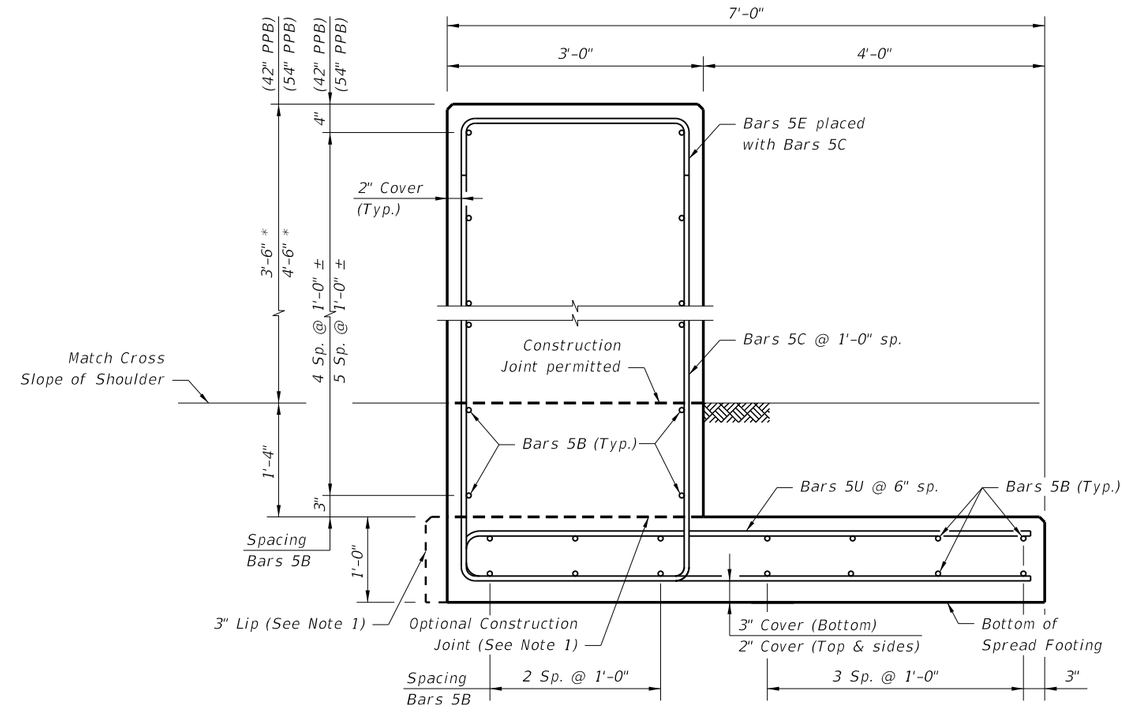

SECTION H-H

NOTE:
PPB = Pier Protection Barrier

CRASH WALL & FOOTING DETAILS

C:\d\projects\standards\roadway\00400-s\00411-10.dgn rd960rh 2:00:19 PM 6/28/2012

LAST REVISION	REVISION	DESCRIPTION:			INDEX NO.	SHEET NO.
07/01/07			FDOT DESIGN STANDARDS 2013	PIER PROTECTION BARRIER	411	10

GENERAL NOTES

1. The 'Portable Temporary Low Profile Barrier For Roadside Safety' is a licensed design by the University Of Florida. Any infringement on the rights of the designer shall be the sole responsibility of the user.

2. This standard drawing (Index No. 412) is provided by the Florida Department Of Transportation solely for use by the Department and its assignees. The purpose for this standard drawing is to indicate the approval of use of the barrier on the State Highway System; to provide sufficient pictorials for identifying the barrier unit; and, to provide general installation geometry for the barrier.

3. Only those barrier units cast by producers licensed by the University Of Florida will be allowed for installation on the State Highway System in Florida. Barrier wall units shall conform to Section 521 of the Standard Specification and shall be produced in Department approved plants with quality control plans for precasting concrete barrier walls. Each barrier wall unit shall be permanently marked with an identification that is traceable to the manufacturer, the producing precast concrete plant and the date of production. This permanent identification mark will serve as certification that the unit has been manufactured in accordance with University of Florida drawings and specifications, and the approved quality control program.

4. The low profile barrier is to be installed only with hardware and accessories furnished by the licensed barrier producer. Units shall be used for no purpose other than as interconnected segments in a run of barrier. Low profile barrier wall units shall maintain firm contact with adjoining units. Nuts on tensioning rods shall be installed snug tight.

5. The low profile barrier is applicable for work zone speeds of 45 mph or less.

6. Tubular markers shall be installed along the run of barrier at the ends and at 50' centers on tangents and 25' centers on radii. The markers shall be fixed to the top of the barrier by an adhesive or other method approved by the engineer. Approach end units shall be marked with a Type I object marker. The cost of the tubular markers and Type I object marker shall be included in the cost of the low profile barrier.

7. Information regarding licensing, shop drawings, specifications, quality control and certification of compliance can be obtained from the University Of Florida: Office of Technology Licensing, P.O. Box 115500, Gainesville, Florida, 32611-5500. Telephone: 352-392-8929, Fax: 352-392-6600. Reference UF#11052.

8. The Portable Temporary Low Profile Barrier For Roadside Safety shall be paid for under the contract unit price for Barrier Wall (Temporary) Low Profile Concrete, LF, and will be full compensation for furnishing, installing, maintaining and removing barrier wall.

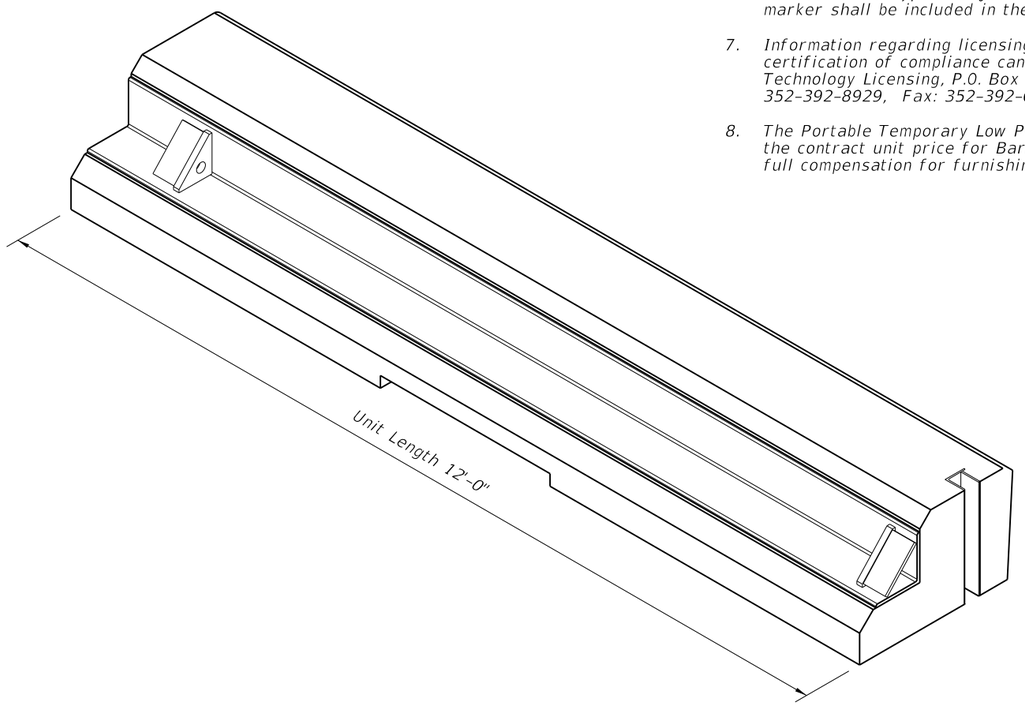

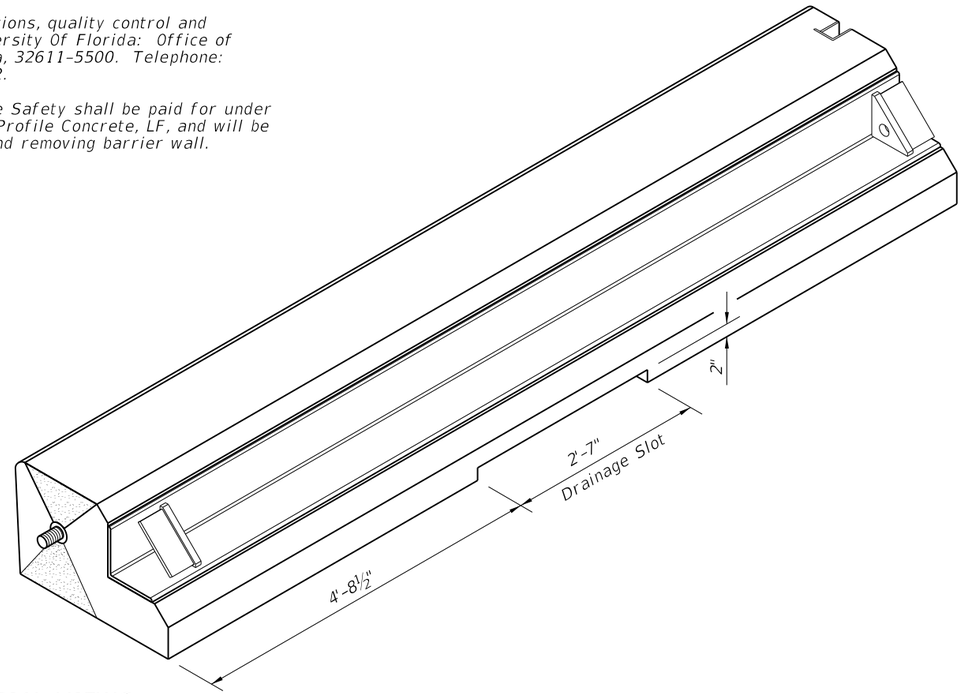

BACKSIDE AND END PICTORIAL VIEWS

PORTABLE TEMPORARY LOW PROFILE BARRIER FOR ROADSIDE SAFETY

LAST REVISION	REVISION	DESCRIPTION:			INDEX NO.	SHEET NO.
01/01/12			FDOT DESIGN STANDARDS 2013	LOW PROFILE BARRIER	412	1

6/28/2012 2:00:21 PM rd960rh C:\d\projects\standards\roadway\00400-s\00412-01.dgn

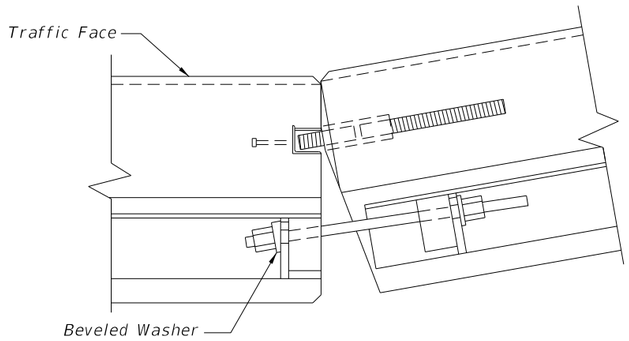

CONCAVE CONNECTION

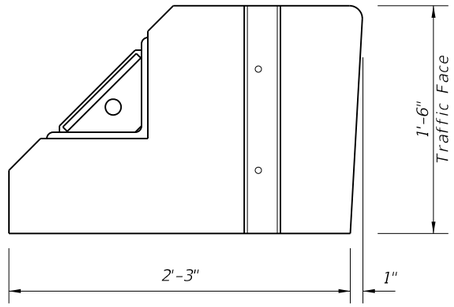

FLAT FACE FEMALE END

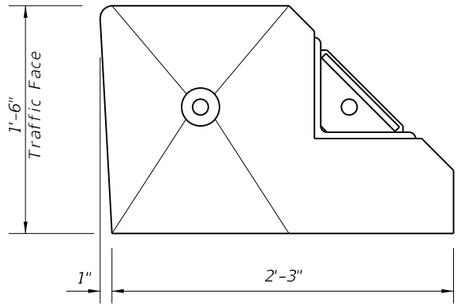

BEVELED FACE MALE END

END VIEWS

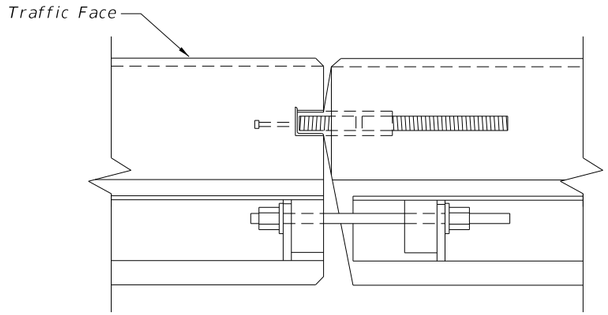

PARALLEL CONNECTION

WORK POSTED SPEED	OFFSET TO TRAVELWAY	DEFLECTION SPACE
45 MPH OR LESS	1' MIN. 2' PREFERRED	9"

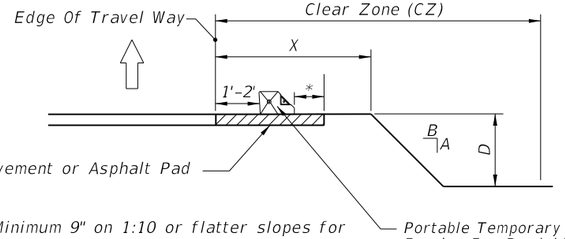

* Minimum 9" on 1:10 or flatter slopes for 'Portable Temporary Low Profile Barrier For Roadside Safety.' For values A, B, D and X see Index No. 600.

DEFLECTION SPACE AT DROPOFFS

Notes:

LIMITATION OF USE: This installation technique can only be used on flexible or rigid pavement or on an asphalt pad as shown.

ASPHALT PAD: Where exisiting pavement is not present, construct the Asphalt Pad using Miscellaneous Asphalt Pavement in accordance with Specification Section 339 with the exception that the use of a pre-emergent herbicide is not required. No separate payment will be made for the Asphalt Pad.

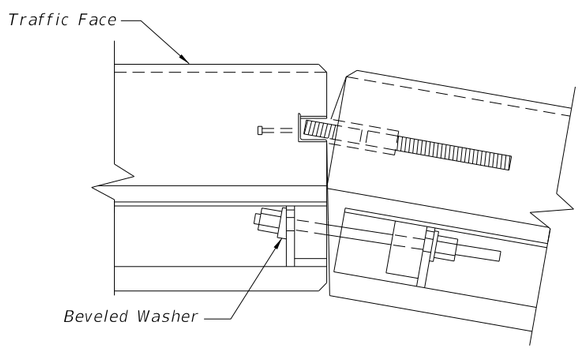

CONVEX CONNECTION

PLAN VIEWS OF CONNECTIONS

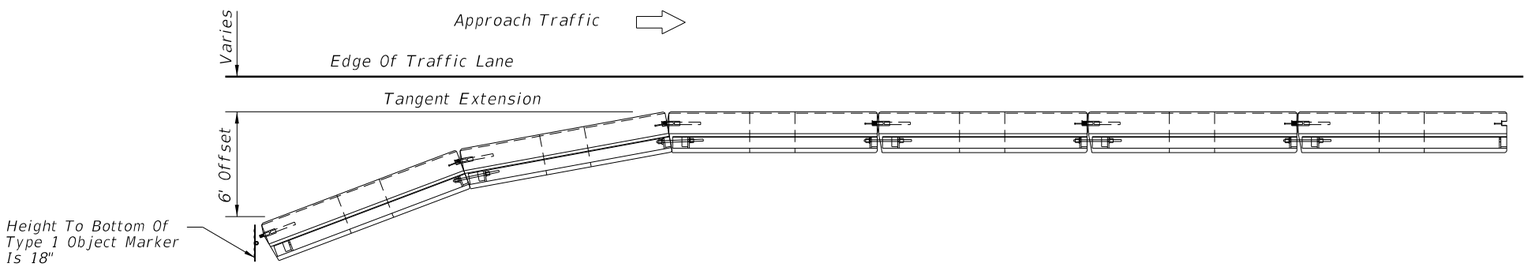

PLAN VIEW OF APPROACH END OFFSET

PORTABLE TEMPORARY LOW PROFILE BARRIER FOR ROADSIDE SAFETY

LAST REVISION	REVISION	DESCRIPTION:		FDOT DESIGN STANDARDS 2013	LOW PROFILE BARRIER	INDEX NO.	SHEET NO.
01/01/12						412	2

C:\d\projects\standards\roadway\00400-s\00412-02.dgn
rd960rh
2:00:23 PM
6/28/2012

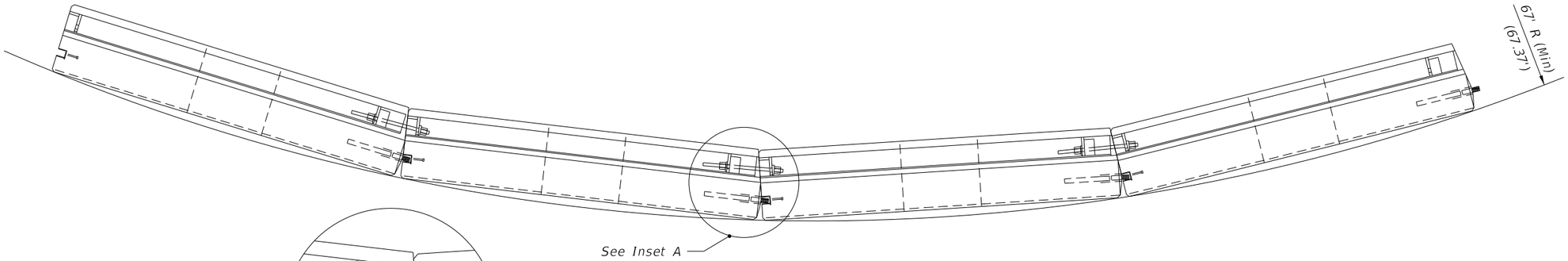

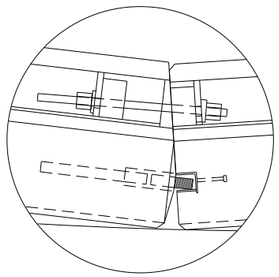

Inset A

TRAFFIC SIDE

CONVEX CURVATURE

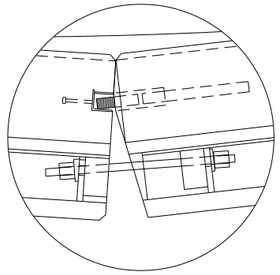

Inset B

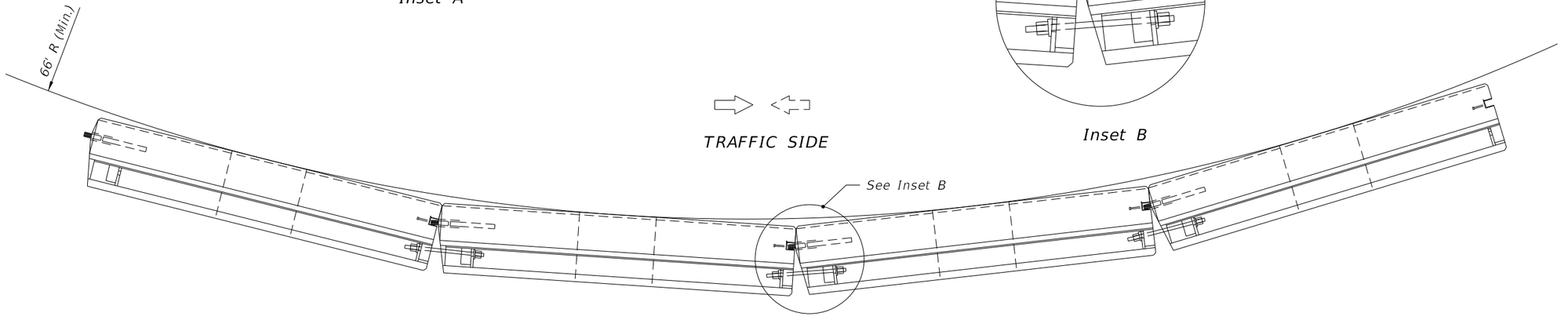

TRAFFIC SIDE

CONCAVE CURVATURE

MAXIMUM CURVATURE ● MINIMUM RADIUS

PORTABLE TEMPORARY LOW PROFILE BARRIER FOR ROADSIDE SAFETY

LAST REVISION	REVISION	DESCRIPTION:		FDOT DESIGN STANDARDS 2013	LOW PROFILE BARRIER	INDEX NO.	SHEET NO.
07/01/05						412	3

6/28/2012 2:00:25 PM rd960rh C:\d\projects\standards\roadway\00400-s\00412-03.dgn

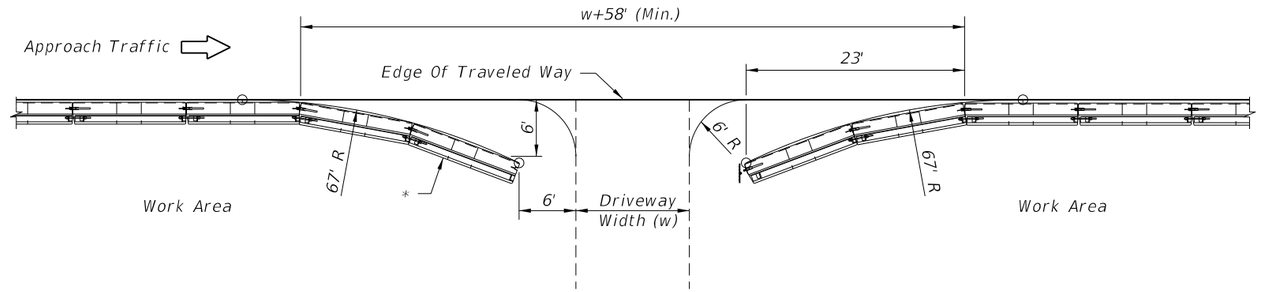

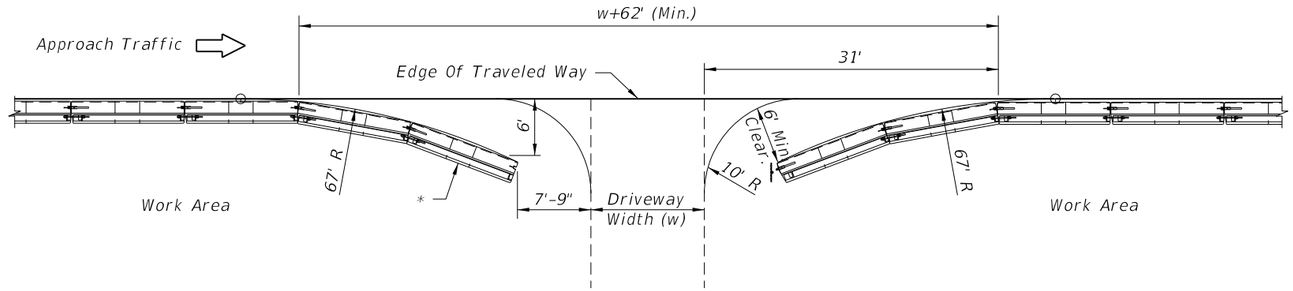

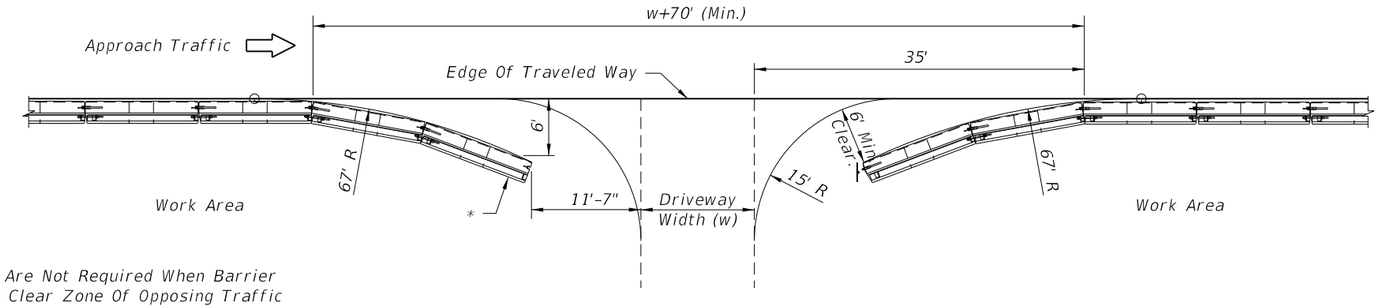

* Trailing End Flares Are Not Required When Barrier Located Outside The Clear Zone Of Opposing Traffic

Type I Object Marker To Be Installed When Trailing End Flare Falls Within The Clear Zone Of Opposing Traffic

LEGEND

Type I Object Marker

BARRIER OPENINGS AT DRIVEWAYS

PORTABLE TEMPORARY LOW PROFILE BARRIER FOR ROADSIDE SAFETY

LAST REVISION	REVISION	DESCRIPTION:		FDOT DESIGN STANDARDS 2013	LOW PROFILE BARRIER	INDEX NO.	SHEET NO.
01/01/12						412	4

6/28/2012 2:00:27 PM rd960rh C:\d\projects\standards\roadway\00400-s\00412-04.dgn

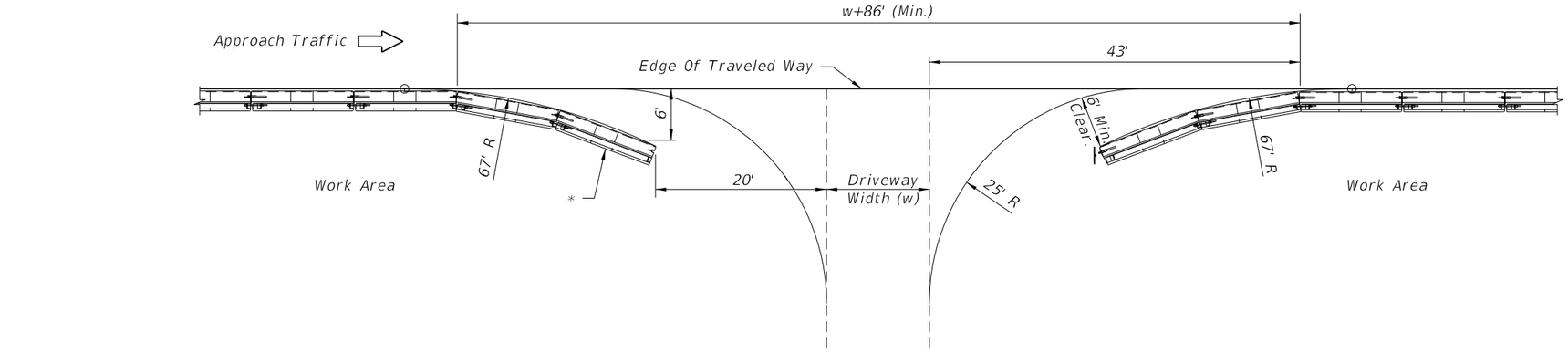

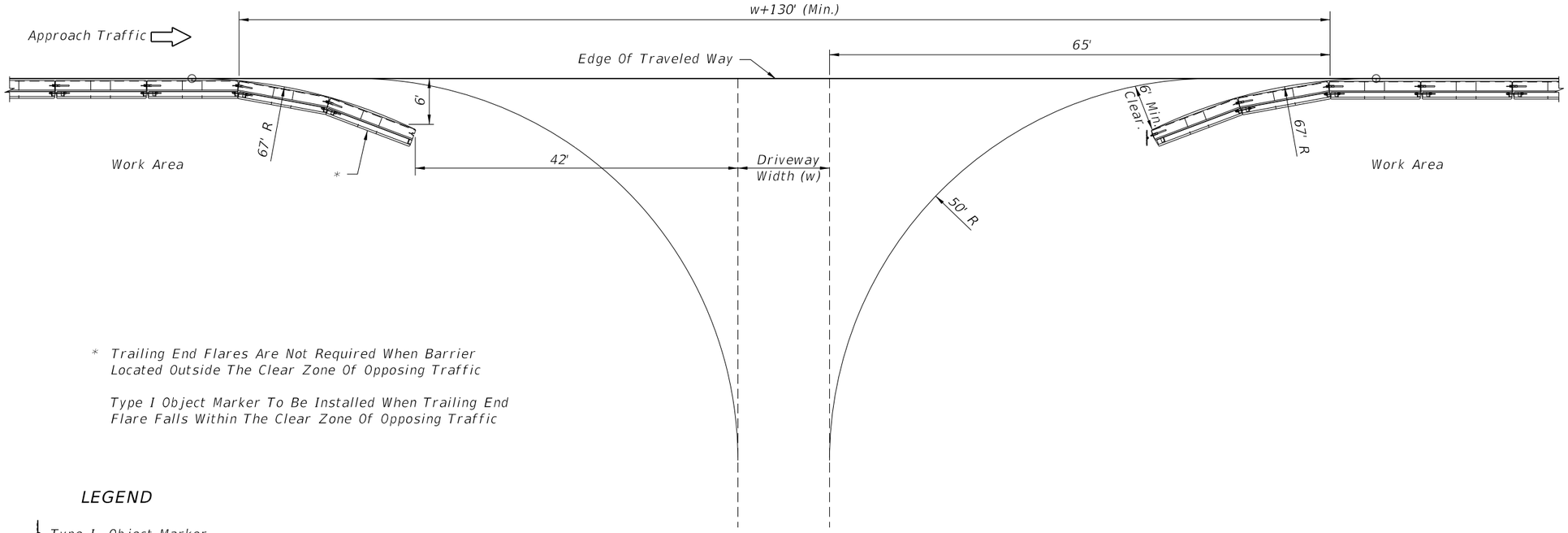

* *Trailing End Flares Are Not Required When Barrier Located Outside The Clear Zone Of Opposing Traffic*

Type I Object Marker To Be Installed When Trailing End Flare Falls Within The Clear Zone Of Opposing Traffic

LEGEND

Type I Object Marker

BARRIER OPENINGS AT DRIVEWAYS

PORTABLE TEMPORARY LOW PROFILE BARRIER FOR ROADSIDE SAFETY

LAST REVISION	REVISION	DESCRIPTION:		FDOT DESIGN STANDARDS 2013	LOW PROFILE BARRIER	INDEX NO.	SHEET NO.
01/01/12						412	5

C:\d\projects\standards\roadway\00400-s\00412-05.dgn rd960rh 2:00:29 PM 6/28/2012

The Type K Temporary Concrete Barrier System has been crash tested to NCHRP Report 350 TL-3 criteria or structurally evaluated to meet the requirements of NCHRP Report 350 TL-3 criteria for the installation configurations as shown utilizing the types, sizes, lengths, shapes, strengths and grades of the fabrication and installation materials as shown.

In order to maintain crashworthiness of the system, do not substitute different grades, sizes, shapes or types of reinforcing steel for those shown for constructing Type K Barrier Units. Also, do not substitute different type, size, length or material grade anchor bolts, nuts, washers, adhesives, connector pins, stakes, keeper pins, or guardrail components for installing Type K Barrier Units.

FABRICATION NOTES:

FABRICATOR PREQUALIFICATION: The Barrier Units shall be made in a prestressed concrete plant that meets the requirements of Specification Section 450 or in a precast plant meeting the requirements of Specification Section 105.

CONCRETE: Concrete shall be Class IV in accordance with Specification Section 346. Specification Sections 346-10.2 through 346-10.4 are not applicable. Barrier Units represented by concrete acceptance strength tests which fall below 5000 psi will be rejected.

REINFORCING STEEL: All reinforcing steel shall be ASTM A 615, Grade 60 except for Bars 6D1, 6D2 and 6D3. Bars 6D1, 6D2 and 6D3 shall be ASTM A 706 except that a 2¾" diameter pin must be used for the 180 degree bend test. After fabrication, all or part of Bars 6D shall be hot dip galvanized in accordance with Specification Section 962 or coated with a cold galvanizing compound in accordance with Specification Section 975. The minimum limit of galvanizing or coating is shown in the Bending Diagrams. At the Fabricator's option, the entire length of Bars 6D may be galvanized or coated. Install Bars 6D within ⅛" of the plan dimensions. Correct placement of Bars 6D is critical for proper fit up and performance of individual Barrier Units.

At the option of the Fabricator, Deformed Welded Wire Fabric in accordance with ASTM A 497 and the details shown on Sheet 2 may be utilized in lieu of Bars 4A and 5B.

All dimensions in the Bending Diagrams are out to out. All reinforcing steel shall have a 2" minimum cover except as noted.

LIFTING SLEEVE ASSEMBLY: Inclusion of the Lifting Sleeve Assemblies is optional. Steel for Pipe Sleeve shall be in accordance with ASTM A 53. Hot-dip galvanize the Lifting Sleeve Assemblies after their fabrication in accordance with the Specifications.

SURFACE FINISH: Construct Barrier Units in accordance with Specification Sections 400 and 521. Finish the top and sides of the Barrier Units with a General Surface Finish. Finish the bottom of the Barrier Units to a dense uniform surface by floating in lieu of the General Surface Finish. Use stationary metal forms or stationary timber forms with a form liner.

MARKING: Permanently mark the top left end of each Barrier Unit by the use of an embedded and anchored metallic plate with letters and figures a minimum of 0.5" tall. Ink stamps are not allowed. Permanently mark with the following information:

- Type K1
- Fabricator's name or symbol
- Date of manufacture (day, month and year)

HANDLING: At no time shall the Barrier Units be lifted or moved by use of Bars 6D that extend from the ends of the units. Approximate weight of one unit equals 2.7 tons.

Alternate Designs: Manufacturers/vendors seeking approval of proprietary Temporary Barrier Systems for inclusion on the Qualified Products List (QPL) as alternative designs shall submit a Product Application package. The application package shall include manufacturer's product drawings, specifications, installation manual, National Cooperative Highway Research Program (NCHRP) Report 350 or Manual for Assessing Safety Hardware (MASH) Test Level 3 (TL-3) crash test documentation and the FHWA "Letter of Acceptance." The posted QPL drawings will need to include the following:

1. Anchorage, bolting, and staking details for connections to asphalt and concrete pavement.
2. Sections and tables showing required deflection space and minimum offsets to above ground hazards or drop-offs.
3. Alignment and length of need details.
4. Transition and overlap details.
5. End treatment details.

6/28/2012 2:00:31 PM rd960rh C:\d\projects\standards\roadway\00400-s\00414-01.dgn

LAST REVISION	REVISION	DESCRIPTION:		FDOT DESIGN STANDARDS 2013	TYPE K TEMPORARY CONCRETE BARRIER SYSTEM	INDEX NO.	SHEET NO.
07/01/12						414	1

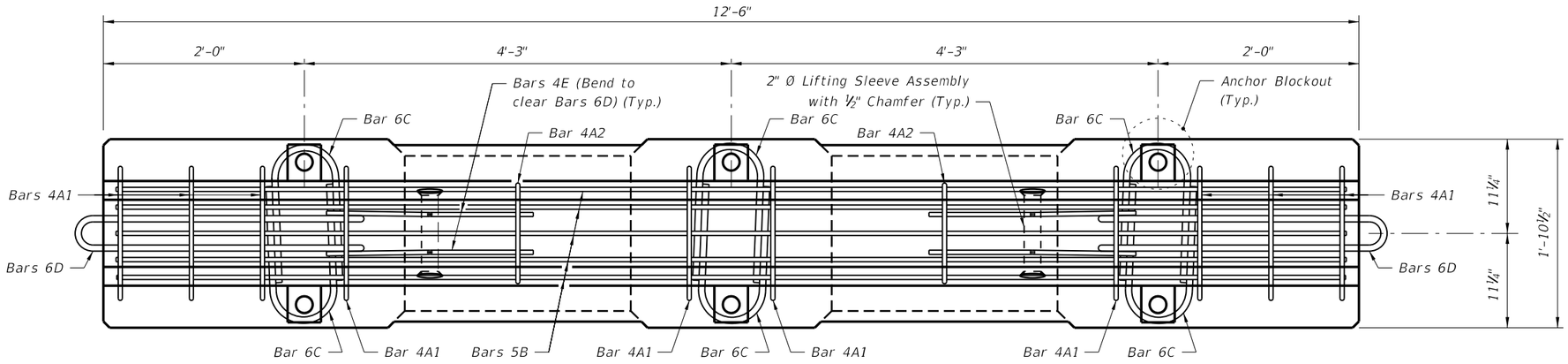

PLAN VIEW

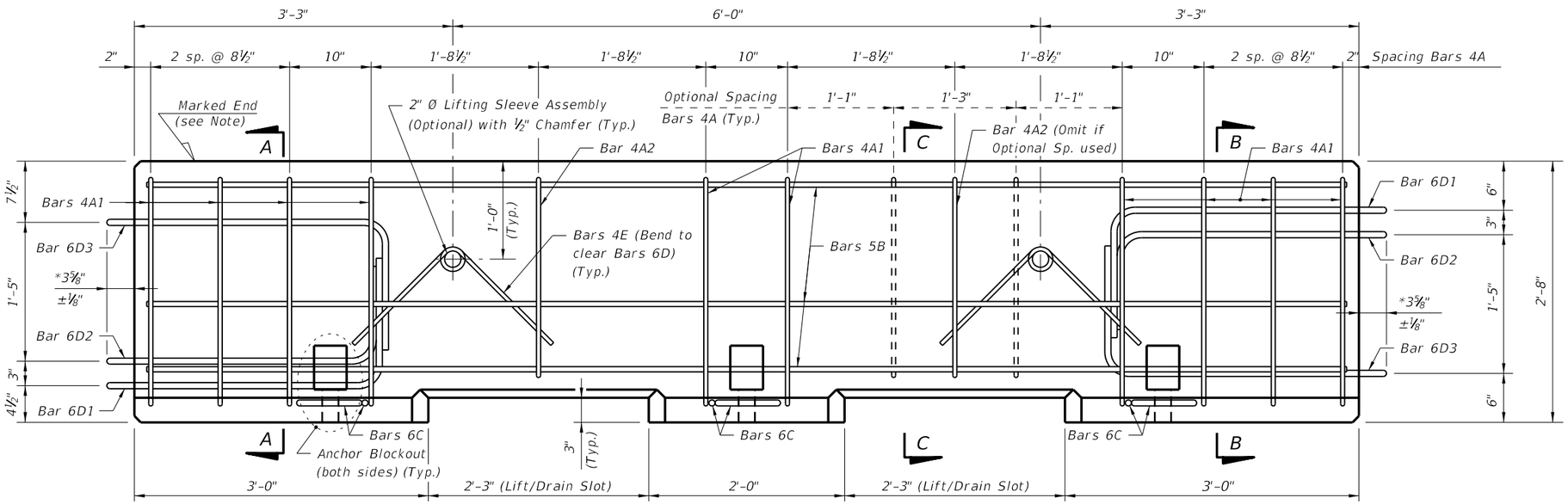

ELEVATION VIEW

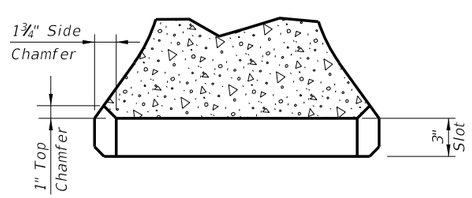

SECTION THRU LIFT/DRAIN SLOT

ESTIMATED TEMPORARY CONCRETE BARRIER QUANTITIES		
ITEM	UNIT	QUANTITY
Concrete	CY	1.29
Reinforcing Steel	LB	218

The above quantities are for one Barrier Unit.

Cross References:
For Section A-A, Section B-B and Section C-C see Sheet 3.

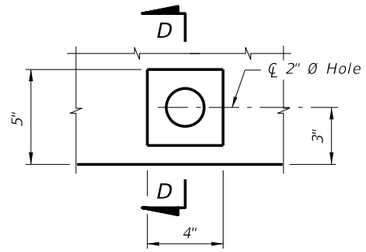

ANCHOR BLOCKOUT DETAIL

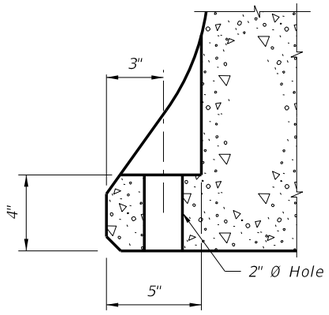

SECTION D-D
(Reinforcement not shown for clarity)

* Measured from end of Barrier Unit to outside edge of Bars 6D.

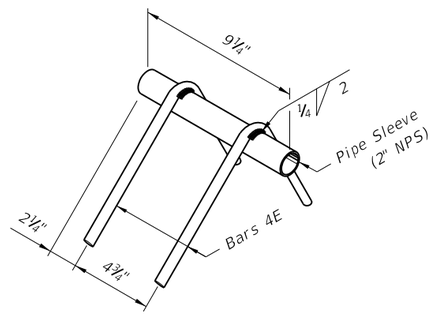

LIFTING SLEEVE
ASSEMBLY DETAIL (OPTIONAL)

C:\d_projects\standards\roadway\00400-s\00414-02.dgn
rd960rh
2:00:33 PM
6/28/2012

LAST REVISION	REVISION	DESCRIPTION:		FDOT DESIGN STANDARDS 2013	TYPE K TEMPORARY CONCRETE BARRIER SYSTEM	INDEX NO.	SHEET NO.
07/01/07						414	2

ALTERNATE REINFORCING STEEL DETAIL
WELDED WIRE REINFORCEMENT

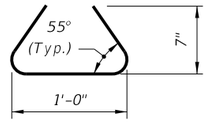

NO. 4 BAR OVER
DRAIN SLOTS
(CONVENTIONAL STEEL)

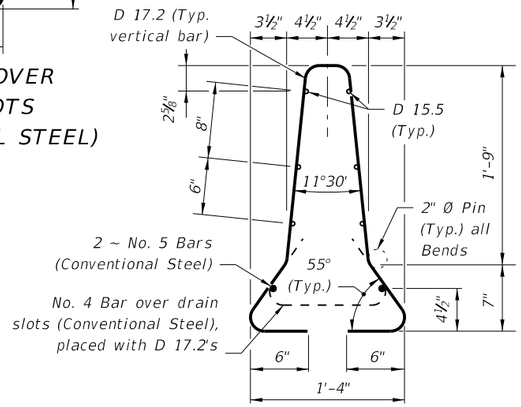

NOTES:
Place 2 ~ No. 5 Bars (12'-3" long) in bottom of Welded Wire Reinforcement cage as shown.
D 17.2 spacing shall match spacings for Bars 4A shown in Elevation View, Sheet 2. Field trim D 17.2's to clear drain slots by 2".

CONFIGURATION ONE

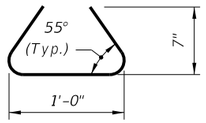

NO. 4 BAR OVER
DRAIN SLOTS
(CONVENTIONAL STEEL)

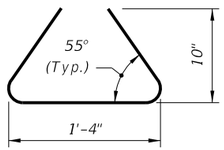

NO. 4 TYPICAL BAR
(CONVENTIONAL STEEL)

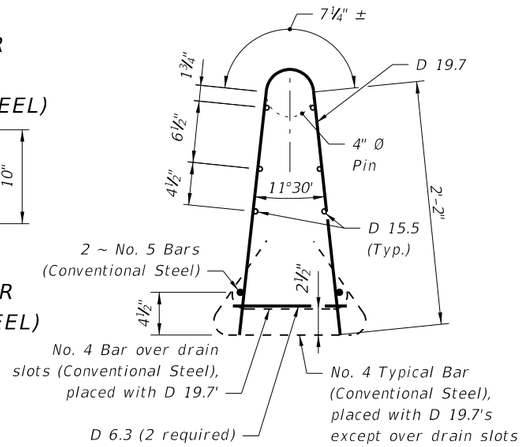

NOTES:
Place 2 ~ No. 5 Bars (12'-3" long) in bottom of Welded Wire Reinforcement cage as shown.
D 19.7 spacing shall match spacings for Bars 4A shown in Elevation View, Sheet 2. Field trim D 19.7's to clear drain slots by 2".

CONFIGURATION TWO

CONVENTIONAL REINFORCING STEEL BENDING DIAGRAMS

BILL OF REINFORCING STEEL

MARK	SIZE	NUMBER	LENGTH
A1	4	10	6'-1"
A2	4	2	5'-5"
B	5	5	12'-3" (Straight)
C	6	6	3'-1"
D1	6	2	8'-4"
D2	6	2	7'-6"
D3	6	2	8'-6"
E	4	4	2'-0"

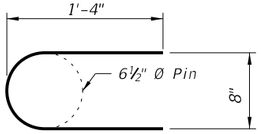

BAR 6C

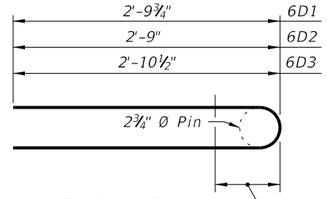

TOP VIEW
BARS 6D1, 6D2 & 6D3

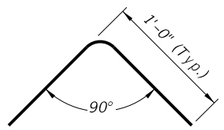

BAR 4E

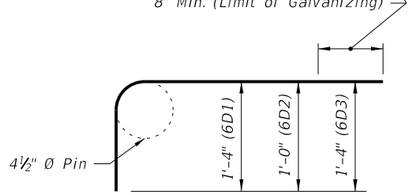

SIDE VIEW
BARS 6D1, 6D2 & 6D3

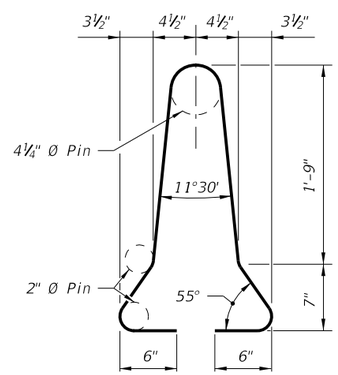

STIRRUP BAR 4A1

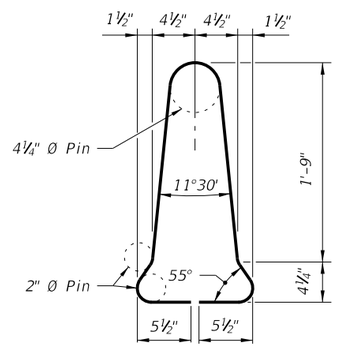

STIRRUP BAR 4A2

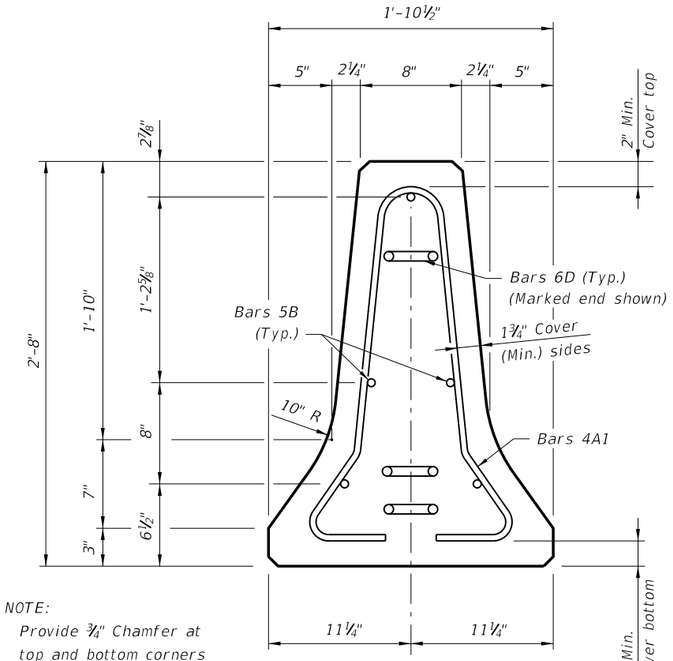

NOTE:
Provide ¾" Chamfer at top and bottom corners of Barrier.

SECTION A-A (SHOWN)
(SECTION B-B SIMILAR)

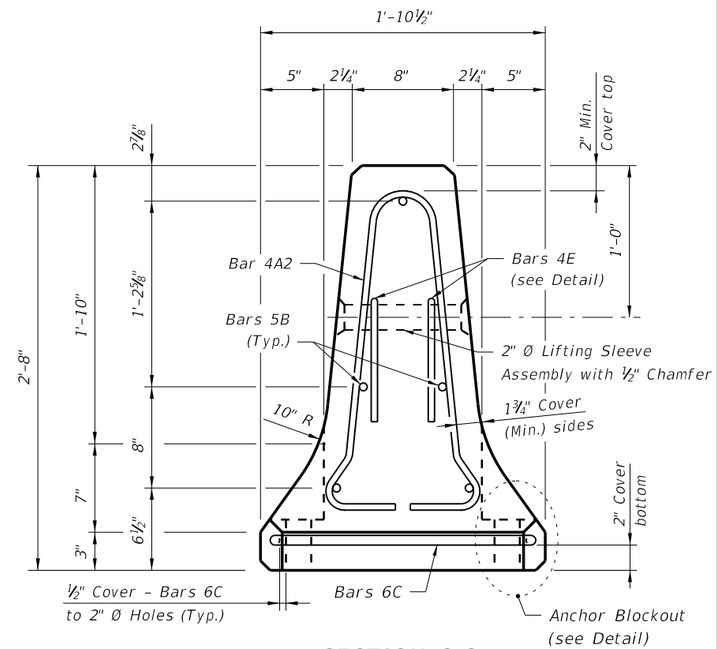

SECTION C-C
(Bars 6D not shown for clarity)

C:\d\projects\standards\roadway\00400-s\00414-03.dgn
rd960rh
2:00:35 PM
6/28/2012

LAST REVISION	REVISION	DESCRIPTION:				
07/01/07			FDOT DESIGN STANDARDS 2013	TYPE K TEMPORARY CONCRETE BARRIER SYSTEM	INDEX NO. 414	SHEET NO. 3

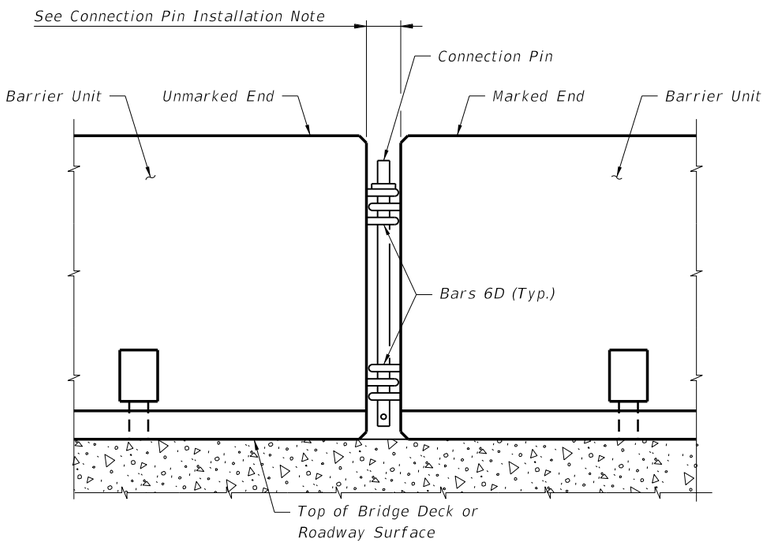

DETAIL OF CONNECTION BETWEEN BARRIER UNITS

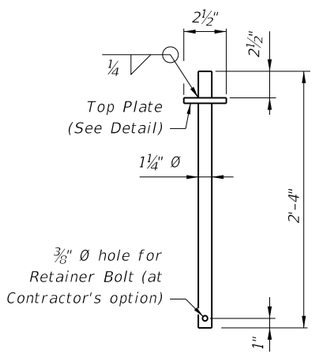

CONNECTION PIN DETAIL

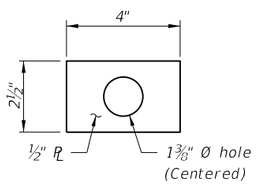

TOP PLATE DETAIL

NOTES FOR ALL INSTALLATIONS:

LIMITATION OF USE: This Temporary Concrete Barrier System is intended for work zone traffic control and other temporary applications. It shall not be used for permanent traffic railing construction unless specifically permitted by the Plans. Except as shown for the Back Filled Roadway Installations, the Barrier Units must be installed on a flexible pavement (asphalt) or rigid pavement (concrete) surface as shown with a cross slope of 1:10 or flatter. Except as shown for transition installations, Type K Barrier Units are not intended to be bolted down or staked down in locations where they can be impacted from the back side.

HANDLING: At no time shall the Barrier Units be lifted or moved by use of Bars 6D that extend from the ends of the units. Approximate weight of one unit equals 2.7 tons.

SURFACE PREPARATION: Except as shown for the Back Filled Roadway Installations, remove all debris, loose dirt and sand from the pavement, bridge deck or Asphalt Pad surface within the barrier footprint just prior to placement of the Barrier Units.

CONNECTION PIN ASSEMBLY: Steel for Connection Pin and Top Plate assemblies shall be in accordance with ASTM A36 or ASTM A709 Grade 36. Nondestructive testing of welds shall not be required. At the Contractor's option, a ⅜" diameter hole may be provided at the bottom of the Connection Pin, as shown, for the installation of a vandal resistance bolt.

CONNECTION PIN INSTALLATION: Initially set Barrier Units by using a 3⅝" wooden block between ends of adjacent units. Install Connection Pin between adjacent Barrier Units as shown, then pull newly placed Barrier Unit away from adjacent Barrier Unit to remove slack between Connection Pin and Bars 6D (except as shown on Sheet 5). Barrier Units shall not be used unconnected.

DELINEATION: Mount Type C Steady-Burn Lights on top of Barrier Units that are used as traffic barriers along travel ways in work zones. Space the lights at 50' centers in transitions, 100' centers on curves and 200' centers on tangent alignments. Refer to "Warning Lights" on Index No. 600 for additional information.

REUSE OF UNITS: Barrier Units may be reused provided they have the structural integrity and surface qualities of new units. Do not use Barrier Units without Marking Plates.

REUSE OF CONNECTION PINS: Connection pins may be reused if they have the structural integrity of new pins.

INSTALLATIONS ON CURVED ALIGNMENTS: The details presented in these Standards are shown for installations on tangent alignments. Details for horizontally curved alignments are similar.

TRANSITIONS: Transitions are required between freestanding, bolted down, staked down and back filled Type K Barrier installations, see Sheet 8 for transition requirements and details. Transitions are also required between installations of Type K Barrier and other types of temporary barrier, see Index No. 415 for transition requirements and details. Splices and transitions are required between installations of Type K Barrier and permanent Bridge or Roadway Traffic Railings, see Sheets 9 through 13 for transition requirements and details. Transitions are required between installations of Type K Barrier and Proprietary (QPL) Barrier Systems, See Sheets 14 and 15 for transition requirements and details.

PAYMENT: Barrier Units for work zone traffic control and other temporary applications shall be paid for under the contract unit price for Barrier Wall (Temporary) (F&I) (Type K), LF. Any relocation of the Barrier Units required for the project shall be paid for under the contract unit price for Barrier Wall (Temporary) (Relocate) (Type K), LF. Type C Steady-Burn Lights shall be paid for under the contract unit price for Lights (Temp. Barrier Wall Mount) (Type C, Steady Burn), ED. The Contractor shall furnish Barrier Units except when the Plans stipulate the availability of Department owned units. Regardless of unit source the Contractor shall furnish all hardware and shall be responsible for all handling including loading, transport, unloading, stockpiling, installation, removal and return. Unless otherwise noted on the Plans, the BarrierUnits shall become the property of the Contractor and shall be removed from the site prior to acceptance of the completed project.

NOTES FOR THRIE BEAM GUARDRAIL SPLICE INSTALLATIONS:

THRIE-BEAM GUARDRAIL: Provide Thrie-Beam Guardrail for splices in accordance with AASHTO M 180, Type II (Zinc coated) and as follows:
Two panels per splice (One panel per side) of Class B (10 Gauge), or
Four panels per splice (Two nested panels per side) of Class A (12 Gauge).
Guardrail panel length shall be 12'-6". Provide and install all other associated metallic guardrail components (Terminal Connectors, Shoulder Bolts, Hex Bolts and Nuts, Filler Plates, etc.) in accordance with Index No. 400.
Install five Guardrail Anchor Bolts at each end of each splice in any of the standard seven anchor bolt holes in the Thrie-Beam Terminal Connector.
If reinforcing steel is encountered when drilling holes for Guardrail Anchor Bolts in Type K Barrier Units, shift Thrie-Beam Terminal Connector so as to clear reinforcing steel within the given tolerances or select a different bolt hole to use. Do not drill or cut through reinforcing steel within Type K Barrier Units. Drilling or cutting through reinforcing steel within permanent concrete traffic railings is permitted. Do not drill or cut through utilities or conduits within permanent concrete traffic railings.

GUARDRAIL OFFSET BLOCKS: Provide and install timber Offset Blocks meeting the material requirements of Index No. 400. Field trim Offset Blocks as required for proper fit. Utilize Offset Blocks as shown and required in order to prevent bending or kinking of Thrie-Beam Guardrail panels.

CONCRETE FOR FILLING TAPERED TRAFFIC RAILING TOES: Provide concrete for filling tapered toes of Traffic Railings as shown meeting the material requirements of Specification Section 346, any Class, or a commercially available prebagged concrete mix (3000 psi minimum compressive strength). Sampling, testing, evaluation and certification of the concrete in accordance with Specification Section 346 is not required. Saturate with water the surfaces upon and against which the concrete fill will be placed prior to placing concrete. Place and finish concrete fill using forms or by hand methods to the general configurations shown so as to provide a smooth shape transition between the Type K Barrier and the adjacent traffic railing. A low slump is desirable if placing and finishing concrete by hand methods. Cure the concrete fill by application of a curing compound, or by covering with a wet tarp or burlap for a minimum of 24 hours. Completely remove the concrete fill upon relocation or removal of the Type K Temporary Concrete Barrier.

C:\d\projects\standards\roadway\00400-s\00414-04.dgn
rd960rh
2:00:38 PM
6/28/2012

LAST REVISION	REVISION	DESCRIPTION:		FDOT DESIGN STANDARDS 2013	TYPE K TEMPORARY CONCRETE BARRIER SYSTEM	INDEX NO.	SHEET NO.
01/01/11						414	4

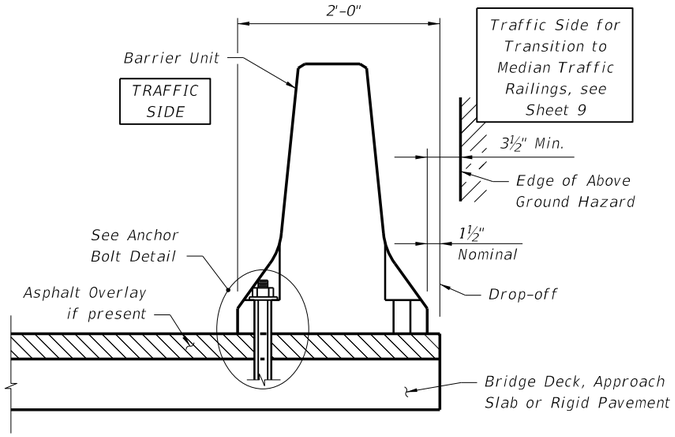

TYPICAL SECTION (BRIDGE DECK SHOWN, APPROACH SLAB OR RIGID PAVEMENT SIMILAR; INSTALLATION ADJACENT TO DROP-OFF SHOWN, MEDIAN TRANSITION INSTALLATION SIMILAR)

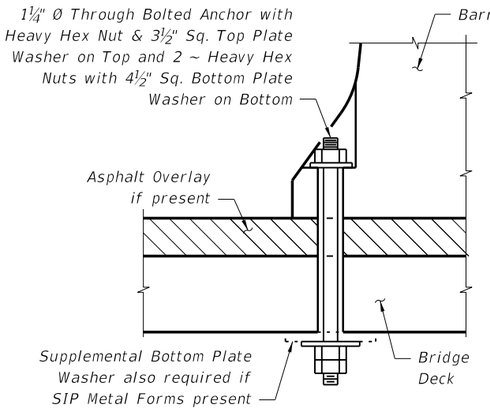

THROUGH BOLTED ANCHOR INSTALLATION ON BRIDGE DECK

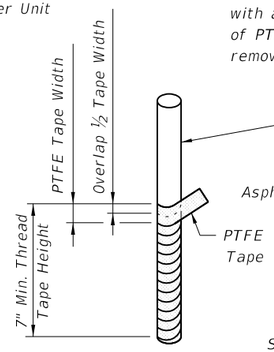

OPTIONAL PTFE TAPING DETAIL

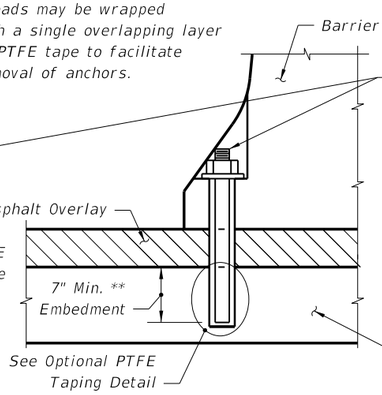

WITH ASPHALT OVERLAY

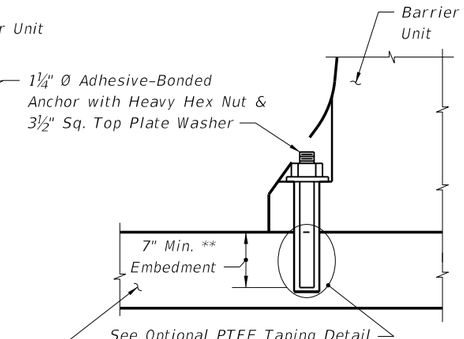

WITHOUT ASPHALT OVERLAY

ADHESIVE BONDED ANCHOR INSTALLATION ON BRIDGE DECK, APPROACH SLAB OR RIGID PAVEMENT

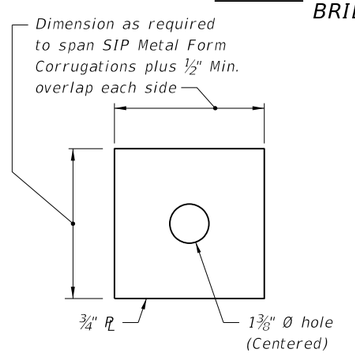

SUPPLEMENTAL BOTTOM PLATE WASHER DETAIL

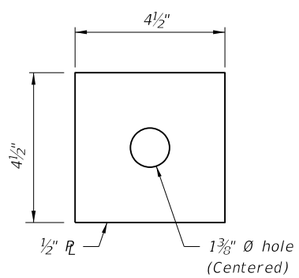

BOTTOM PLATE WASHER DETAIL

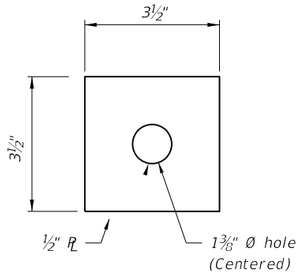

TOP PLATE WASHER DETAIL

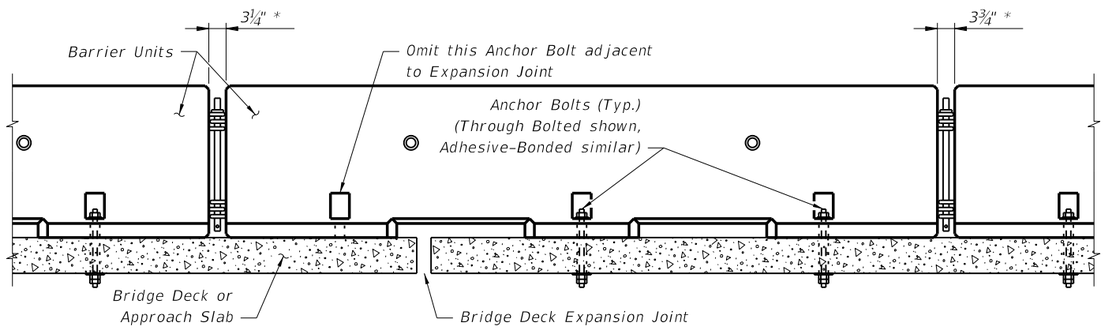

* To accommodate movement at Expansion Joint, set Barrier Units with 3¾" gap at locations shown.

TREATMENT AT BRIDGE DECK EXPANSION JOINT SCHEMATIC

NOTES FOR BOLTED DOWN BRIDGE, APPROACH SLAB, ROADWAY AND TRANSITION INSTALLATIONS:

LIMITATION OF USE: This installation technique can only be used on rigid pavement and concrete bridge decks as shown. Barrier Units shall not be bolted down on bridge superstructures that contain post-tensioned tendons within the concrete deck (top flange of concrete box girders) or on bridge superstructures consisting of longitudinally prestressed, transversely post-tensioned, solid or voided concrete slab units. Anchor Bolts must not be installed on both sides of the Barrier Units. Do not bolt down Barrier Units across bridge finger or modular expansion joints.

ANCHOR BOLTS, NUTS AND WASHERS: Adhesive-Bonded Anchor Bolts shall be fully threaded rods in accordance with ASTM F 1554 Grade 36. Anchor Bolts for through bolting shall be in accordance with ASTM A 307 or ASTM F 1554 Grade 36. Nuts shall be in accordance with ASTM A 563 or ASTM A 194. Flat Washers shall be in accordance with ASTM F 436 and Plate Washers shall be in accordance with ASTM A 36 or ASTM A 709 Grade 36.

Install three (3) Anchor Bolts per Barrier Unit on the traffic side of the Barrier Units as shown, except for Transition Installations. For the number and positions of Anchor Bolts required in Transition Installations see Sheets 8 and 9 and Index No. 415. Drilling through deck reinforcing steel to install Anchor Bolts is permitted. Unless otherwise shown in the Plans, at the Contractor's option Barrier Units may be installed by through bolting (where geometrically possible) or by the use of Adhesive-Bonded Anchor Bolts. Do not drill into or otherwise damage the tops of supporting beams or girders, bridge deck expansion joints or drains. Install Anchor Bolts and Nuts so that the maximum extension beyond the face of the Barrier Units is ½". Snug tighten the Nuts on the Anchor Bolts. For through bolted installations, snug tighten the double Nuts on the underside of the deck against each other to minimize the potential for loosening.

Omit one (1) Anchor Bolt within a single Barrier Unit if a conflict exists between the Anchor Bolt location and a bridge deck expansion joint or drain. The adjacent Barrier Units must each be installed with the standard three (3) Anchor Bolts.

Omit one (1) Anchor Bolt within a single Barrier Unit as shown in the Treatment at Bridge Deck Expansion Joint Schematic if the Barrier Unit straddles a bridge deck expansion joint. The adjacent Barrier Units must each be installed with the standard three (3) Anchor Bolts.

ADHESIVE-BONDING MATERIAL SYSTEMS: Adhesive Bonding Material Systems for Anchor Bolts shall be Type HSHV in accordance with Specification Section 937 and shall be installed in accordance with Specification Section 416. Prior to installation of the Barrier Units in the Plan location(s), install a demonstration Barrier Unit using the proposed production installation method, at a location approved by the Engineer. In lieu of the production test requirements of Specification Section 416-6, install six (6) Adhesive-Bonded Anchor Bolts in the demonstration Barrier Unit and test each Anchor Bolt with a 29,800 pound tensile proof load. Install and test additional demonstration Barrier Units when requested by the Engineer. Remove the demonstration Barrier Unit prior to testing the Anchor Bolts. Remove the test Anchor Bolts after testing as directed by the Engineer.

REMOVAL OF ANCHOR BOLTS: Upon removal or relocation of Barrier Units, remove all Anchor Bolts and completely fill the remaining holes in bridge decks, approach slabs and roadway rigid pavements that are to remain with Magnesium Ammonium Phosphate Concrete in accordance with Specification Section 930 or with an Epoxy Resin Compound, Type I or Q, in accordance with Specification Section 926. If a flexible pavement overlay is present and is to remain, completely fill the remaining holes in the flexible pavement with hot or cold patch asphalt material.

C:\d\projects\standards\roadway\00400-s\00414-05.dgn
rd960rh
2:00:41 PM
6/28/2012

BOLTED DOWN BRIDGE, APPROACH SLAB, ROADWAY AND TRANSITION INSTALLATIONS

LAST REVISION	REVISION	DESCRIPTION:			INDEX NO.	SHEET NO.
01/01/08			FDOT DESIGN STANDARDS 2013	TYPE K TEMPORARY CONCRETE BARRIER SYSTEM	414	5

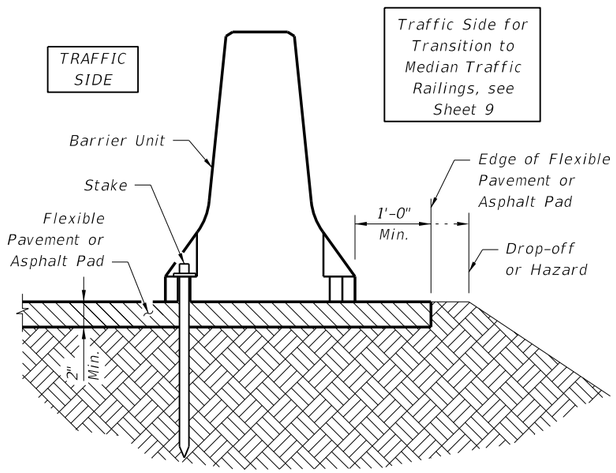

TYPICAL SECTION (INSTALLATION ADJACENT TO DROP-OFF SHOWN, MEDIAN TRANSITION INSTALLATION SIMILAR)

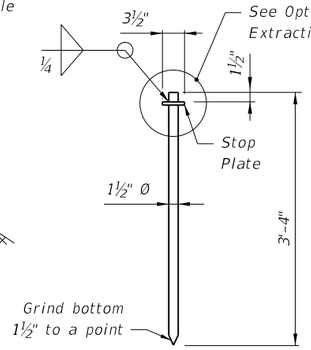

STAKE DETAIL

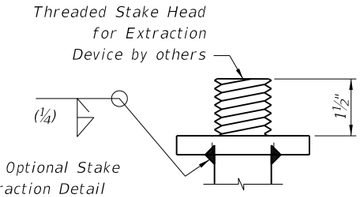

OPTIONAL STAKE EXTRACTION DETAIL

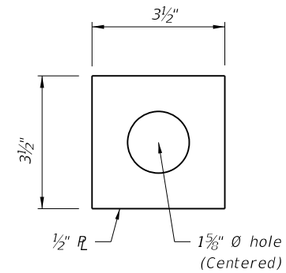

STOP PLATE DETAIL

NOTES FOR STAKED DOWN ROADWAY AND TRANSITION INSTALLATIONS:

LIMITATION OF USE: This installation technique can only be used on flexible pavement or an Asphalt Pad as shown. Stakes must not be installed on both sides of the Barrier Units.

ASPHALT PAD: Where existing flexible pavement is not present, construct the Asphalt Pad using Miscellaneous Asphalt Pavement in accordance with Specification Section 339 with the exception that the use of a pre-emergent herbicide is not required. No separate payment will be made for the Asphalt Pad.

STAKES: Provide steel for Stake assemblies in accordance with ASTM A 36 or ASTM A 709 Grade 36. All welding shall be in accordance with the American Welding Society Structural Welding Code (Steel) ANSI/AWS D1.1 (current edition). Weld metal shall be E60XX or E70XX. Nondestructive testing of welds is not required.

Install three (3) Stakes on the traffic side of the Barrier Units as shown, except for Transition Installations. For the number and positions of stakes required in Transition Installations see Sheets 8 and 9 and Index No. 415. Install Stakes so that the Stop Plate is snug against the bottom of the Anchor Blockout.

BURIED UTILITIES: Prior to installation of Stakes verify locations of all adjacent buried utilities, drainage structures, pipes, etc. If conflicts between Stake locations and buried elements exist, a maximum of two (2) Stakes within a single Barrier Unit may be omitted if the adjacent Barrier Units are installed with the standard three (3) Stakes.

REMOVAL OF STAKES: Upon removal or relocation of Barrier Units, completely remove all Stakes and completely fill the remaining holes in flexible pavement that is to remain with hot or cold patch asphalt material.

REUSE OF STAKES: Stakes may be reused if they have the structural integrity of new stakes.

STAKED DOWN ROADWAY AND TRANSITION INSTALLATIONS

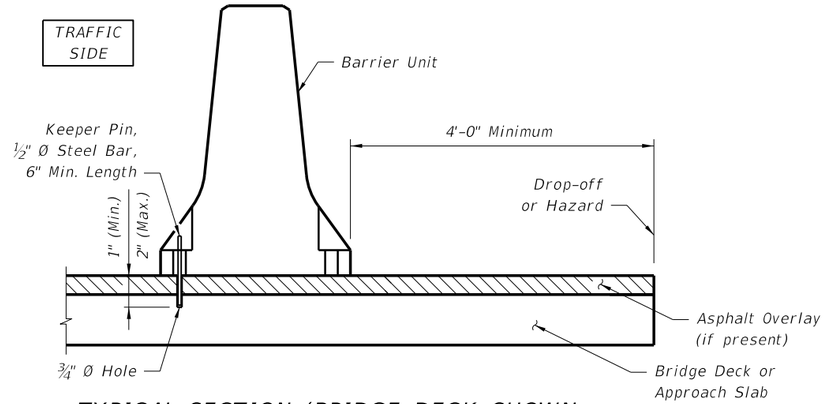

TYPICAL SECTION (BRIDGE DECK SHOWN, APPROACH SLAB SIMILAR)

NOTES FOR FREE STANDING BRIDGE OR APPROACH SLAB INSTALLATIONS:

KEEPER PINS: Keeper Pins shall be ½" diameter, smooth steel bar in accordance with ASTM A 36 or ASTM A 709 Grade 36. As directed by the Engineer in order to limit vibration induced translation of the Barrier Units, install one (1) Keeper Pin per Barrier Unit on the traffic side of the Barrier Units as shown. Do not drill into or otherwise damage bridge deck expansion joints or drains.

REMOVAL OF KEEPER PINS: Upon removal or relocation of Barrier Units, remove all Keeper Pins and completely fill the remaining holes in bridge decks and approach slabs that are to remain with Magnesium Ammonium Phosphate Concrete in accordance with Specification Section 930 or with an Epoxy Resin Compound, Type I or Q, in accordance with Specification Section 926. If a flexible pavement overlay is present and is to remain, completely fill the remaining holes in the flexible pavement with hot or cold patch asphalt material.

FREESTANDING BRIDGE OR APPROACH SLAB INSTALLATIONS

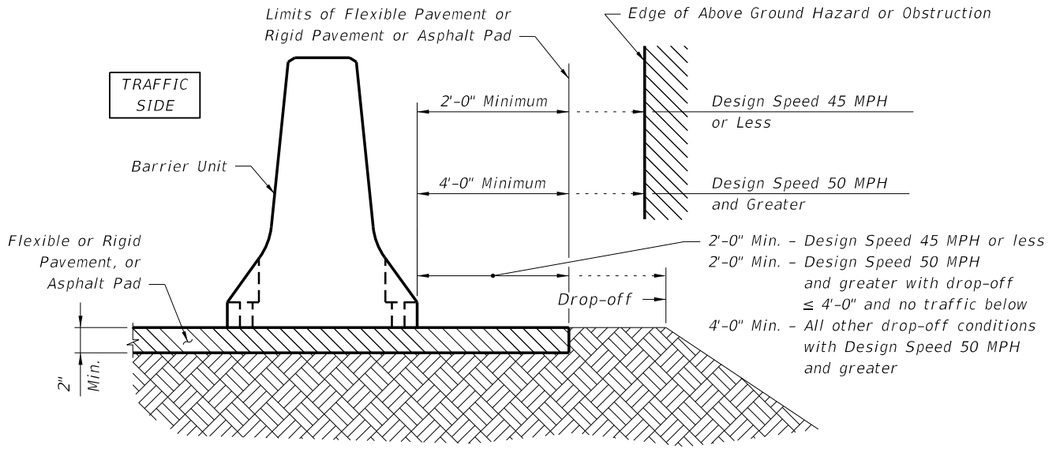

TYPICAL SECTION

NOTES FOR FREE STANDING ROADWAY INSTALLATION:

LIMITATION OF USE: This installation technique can only be used on flexible or rigid pavement or on an Asphalt Pad as shown.

ASPHALT PAD: Where existing pavement is not present, construct the Asphalt Pad using Miscellaneous Asphalt Pavement in accordance with Specification Section 339 with the exception that the use of a pre-emergent herbicide is not required. No separate payment will be made for the Asphalt Pad.

FREESTANDING ROADWAY INSTALLATION

C:\d_projects\standards\roadway\00400-s\00414-06.dgn
rd960rh
2:00:43 PM
6/28/2012

LAST REVISION	REVISION	DESCRIPTION:			INDEX NO.	SHEET NO.
01/01/11			FDOT DESIGN STANDARDS 2013	TYPE K TEMPORARY CONCRETE BARRIER SYSTEM	414	6

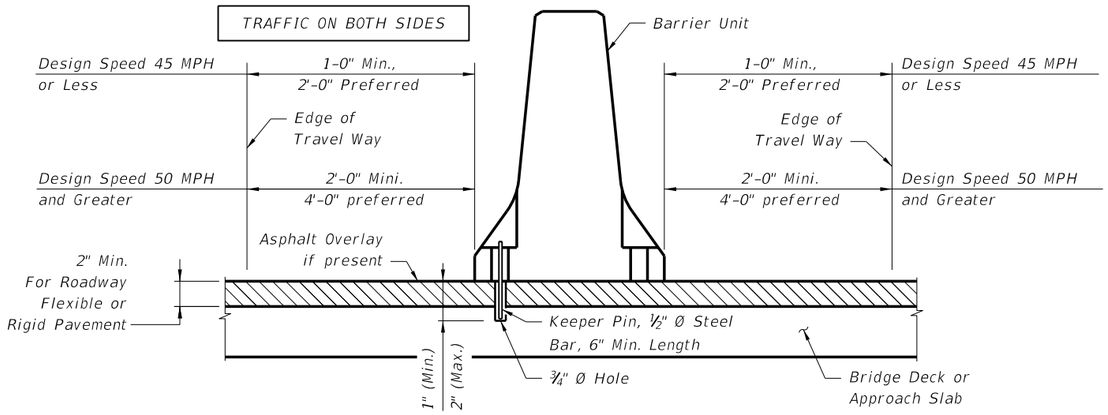

TYPICAL SECTION

NOTES FOR FREESTANDING MEDIAN INSTALLATION:

KEEPER PINS: Required for Bridge Decks only, Keeper Pins shall be ½" diameter, smooth steel bar in accordance with ASTM A 36 or ASTM A 709 Grade 36. As directed by the Engineer in order to limit vibration induced translation of the Barrier Units, install one (1) Keeper Pin per Barrier Unit as shown. Alternate Keeper Pin locations from side to side of Barrier Units along the length of the installation. Do not drill into or otherwise damage bridge deck expansion joints or drains. Upon removal or relocation of Barrier Units, remove all Keeper Pins and completely fill the remaining holes in bridge decks and approach slabs that are to remain with Magnesium Ammonium Phosphate Concrete in accordance with Specification Section 930 or with an Epoxy Resin Compound, Type I or Q, in accordance with Specification Section 926. If a flexible pavement overlay is present and is to remain, completely fill the remaining holes in the flexible pavement with hot or cold patch asphalt material.

ASPHALT PAD: Where existing pavement is not present, construct the Asphalt Pad using Miscellaneous Asphalt Pavement in accordance with Specification Section 339 with the exception that the use of a pre-emergent herbicide is not required. No separate payment will be made for the Asphalt Pad.

FREESTANDING MEDIAN INSTALLATION
(BRIDGE DECK SHOWN, APPROACH SLAB, ASPHALT PAD, FLEXIBLE OR RIGID PAVEMENT SIMILAR)

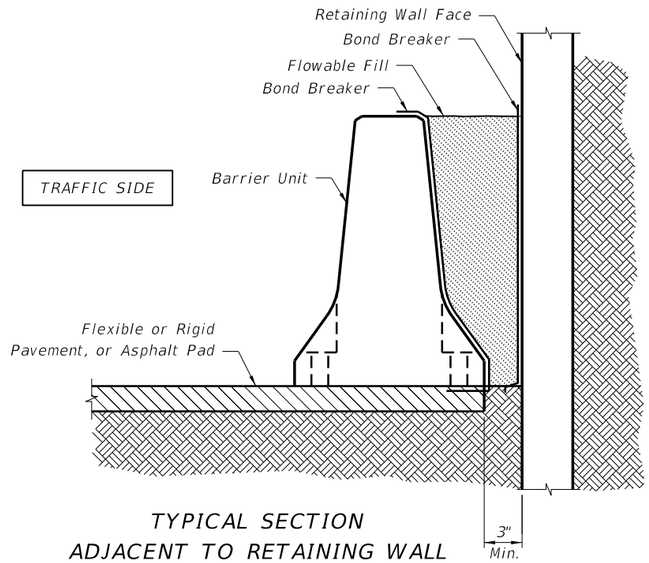

TYPICAL SECTION
ADJACENT TO RETAINING WALL
WITH FLOWABLE FILL BACK FILL

NOTES FOR FLOWABLE FILL BACK FILLED ROADWAY INSTALLATIONS:

FLOWABLE FILL: Provide Flowable Fill in accordance with Specification Section 121.

FLOWABLE FILL BACK FILL ROADWAY INSTALLATIONS

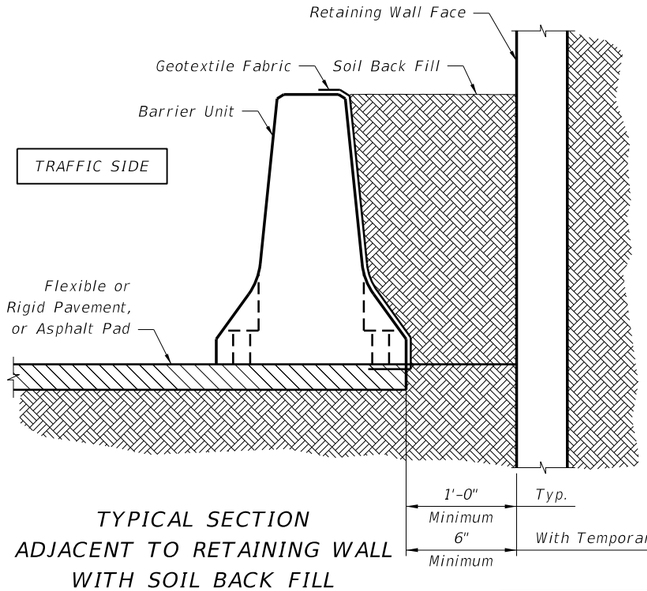

TYPICAL SECTION
ADJACENT TO RETAINING WALL
WITH SOIL BACK FILL

NOTES FOR SOIL BACK FILLED ROADWAY INSTALLATIONS:

SOIL BACK FILL MATERIAL: Provide Back Fill Material consisting of any available clean soil. Compact Back Fill Material until the soil mass is firm and unyielding. Provide erosion control as specified in the Plans. If none is specified in the Plans, provide erosion control as required to maintain the integrity of the Back Fill embankment.

GEOTEXTILE FABRIC: Provide Type D-5 Geotextile Fabric in accordance with Index No. 199 to contain Back Fill Material behind Barrier Units. Geotextile Fabric may be continuous over the length and height of the installation or may be individual pieces as required to cover the Lift / Drain Slots and open vertical joints between Barrier Units.

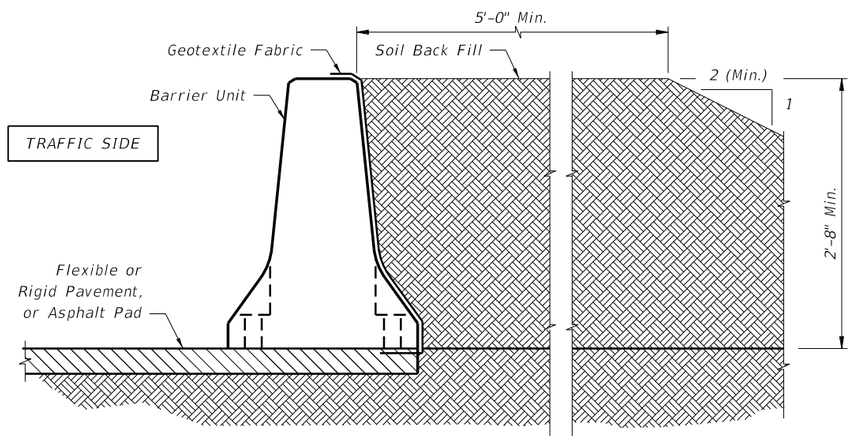

TYPICAL SECTION
WITH SOIL BACK FILL

SOIL BACK FILLED ROADWAY INSTALLATIONS

LAST REVISION	REVISION	DESCRIPTION:				
01/01/11			FDOT DESIGN STANDARDS 2013	TYPE K TEMPORARY CONCRETE BARRIER SYSTEM	INDEX NO. 414	SHEET NO. 7

C:\d\projects\standards\roadway\00400-s\00414-07.dgn rd960rh 2:00:46 PM 6/28/2012

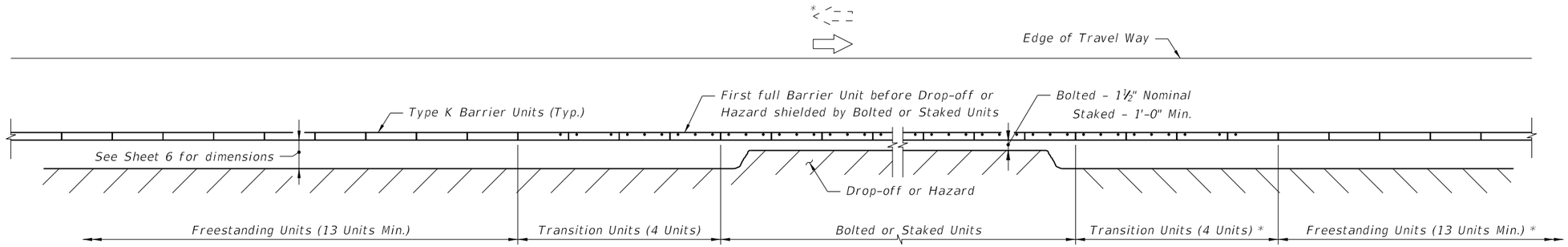

APPROACH TRANSITION FROM FREESTANDING TO BOLTED OR STAKED DOWN TYPE K TEMPORARY CONCRETE BARRIERS

* NOTE:
Where Barrier is located within Clear Zone of opposing traffic, Approach Transition is required.

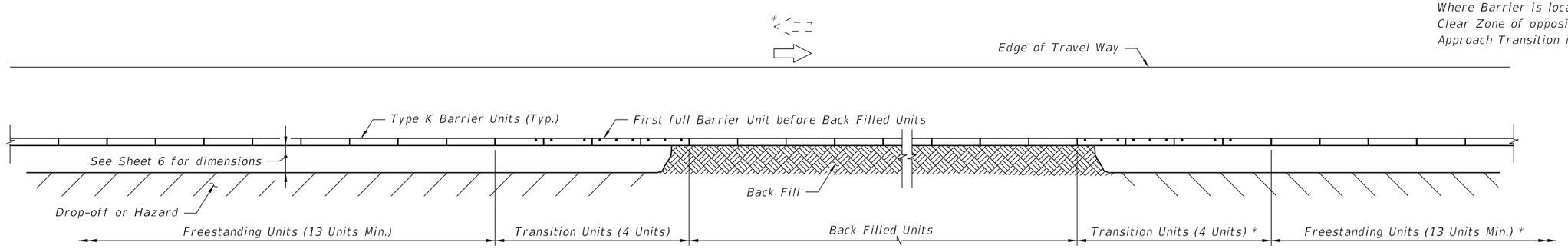

APPROACH TRANSITION FROM FREESTANDING TO BACK FILLED TYPE K TEMPORARY CONCRETE BARRIERS

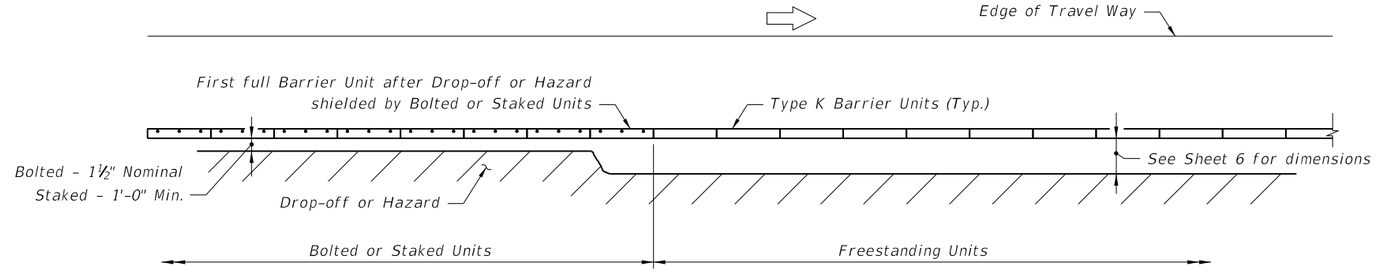

TRAILING END TRANSITION FROM BOLTED OR STAKED DOWN TO FREESTANDING TYPE K TEMPORARY CONCRETE BARRIERS

LEGEND:

Dot indicates number and position of Bolts or Stakes

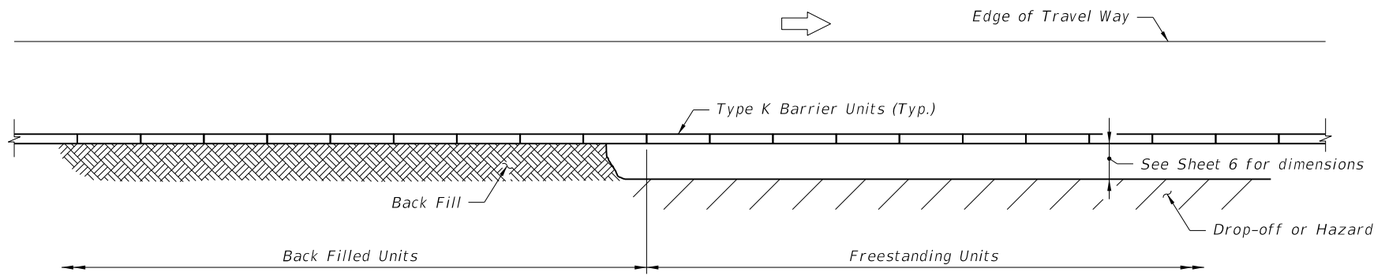

TRAILING END TRANSITION FROM BACK FILLED TO FREESTANDING TYPE K TEMPORARY CONCRETE BARRIERS

C:\d\projects\standards\roadway\00400-s\00414-08.dgn
rd960rh
2:00:48 PM
6/28/2012

LAST REVISION	REVISION	DESCRIPTION:				
07/01/07			FDOT DESIGN STANDARDS 2013	TYPE K TEMPORARY CONCRETE BARRIER SYSTEM	INDEX NO. 414	SHEET NO. 8

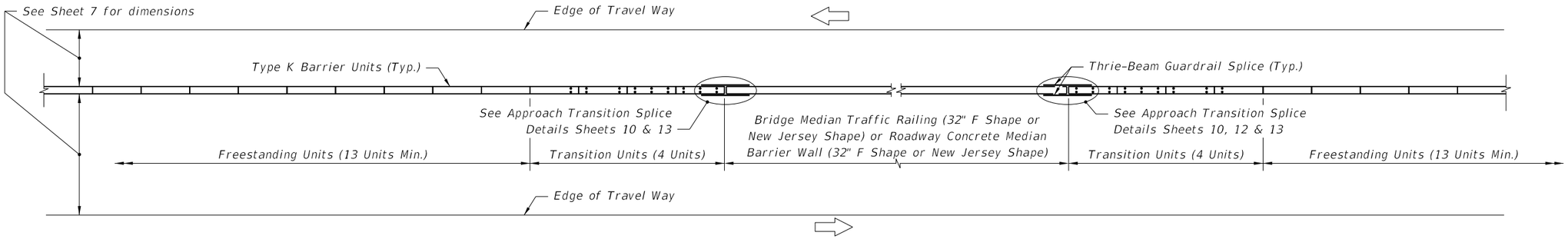

TRANSITION FROM FREESTANDING TYPE K TEMPORARY CONCRETE BARRIERS TO BRIDGE MEDIAN TRAFFIC RAILING OR ROADWAY MEDIAN CONCRETE BARRIER WALL

* NOTE:
Where Barrier is located within Clear Zone of opposing traffic, Approach Transition is required.

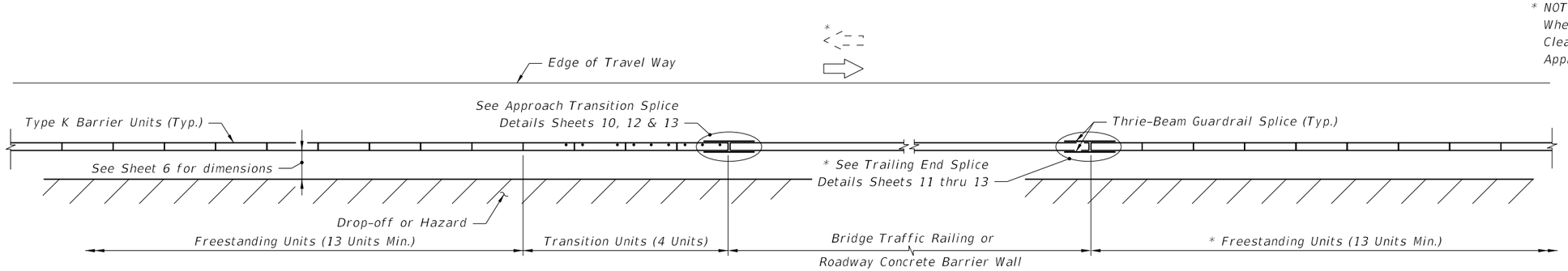

TRANSITION FROM FREESTANDING TYPE K TEMPORARY CONCRETE BARRIERS TO BRIDGE TRAFFIC RAILING OR ROADWAY CONCRETE BARRIER WALL

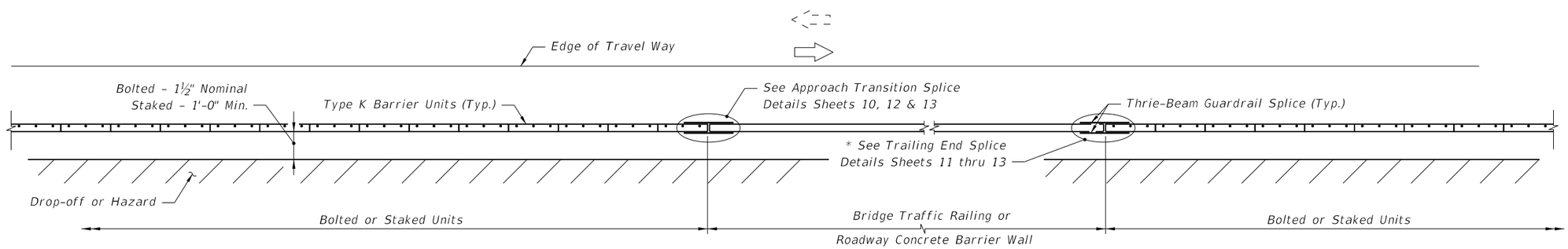

TRANSITION FROM BOLTED OR STAKED DOWN TYPE K TEMPORARY CONCRETE BARRIERS TO BRIDGE TRAFFIC RAILING OR ROADWAY CONCRETE BARRIER WALL

LEGEND:

C:\d\projects\standards\roadway\00400-s\00414-09.dgn
rd960rh
2:00:51 PM
6/28/2012

LAST REVISION	REVISION	DESCRIPTION:				
07/01/07			FDOT DESIGN STANDARDS 2013	TYPE K TEMPORARY CONCRETE BARRIER SYSTEM	INDEX NO. 414	SHEET NO. 9

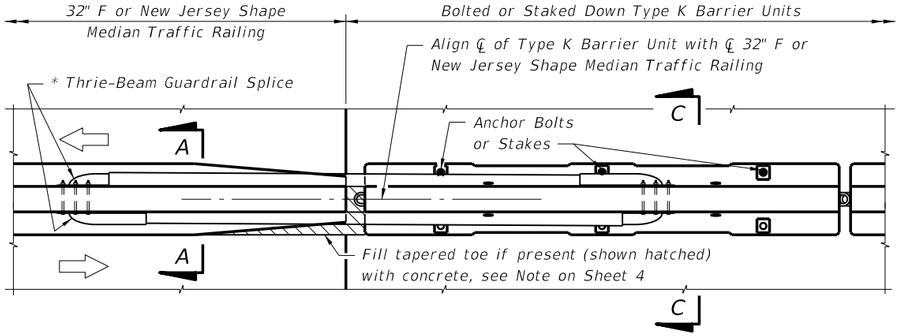

PARTIAL PLAN VIEW AT MEDIAN TRAFFIC RAILING

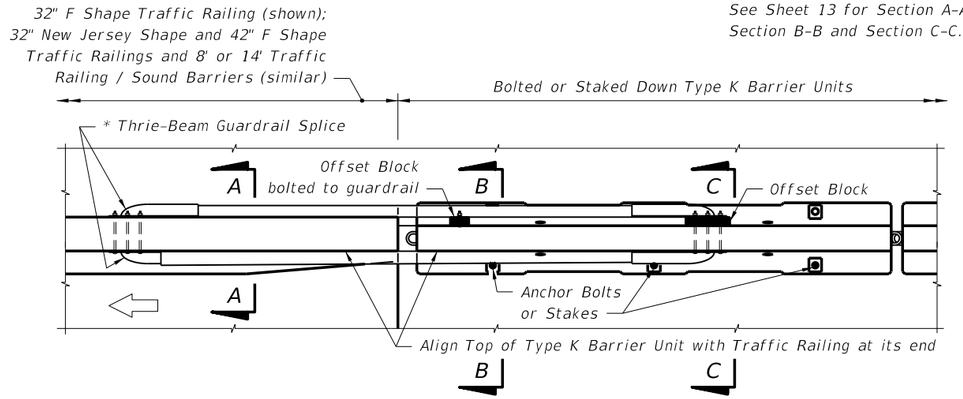

Cross References:
See Sheet 13 for Section A-A,
Section B-B and Section C-C.

PARTIAL PLAN VIEW AT SHOULDER TRAFFIC RAILING

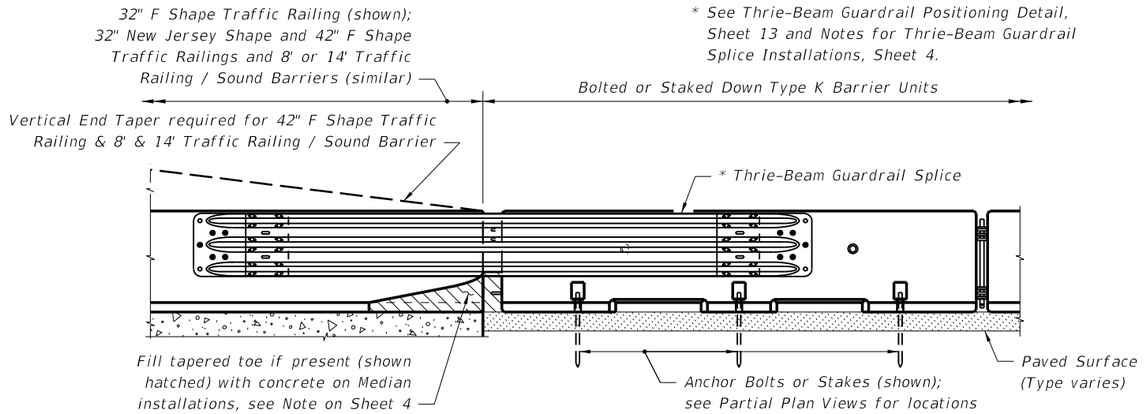

PARTIAL ELEVATION VIEW

APPROACH TRANSITION SPLICE DETAIL
FOR F AND NEW JERSEY SHAPE TRAFFIC RAILINGS AND 8' & 14' TRAFFIC RAILING / SOUND BARRIERS (CONCRETE BARRIER WALL SIMILAR)

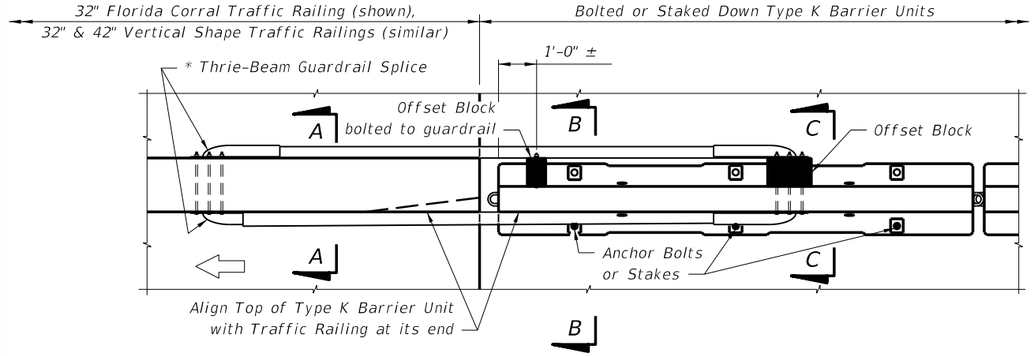

PARTIAL PLAN VIEW

Cross References:
See Sheet 13 for Section A-A,
Section B-B and Section C-C.

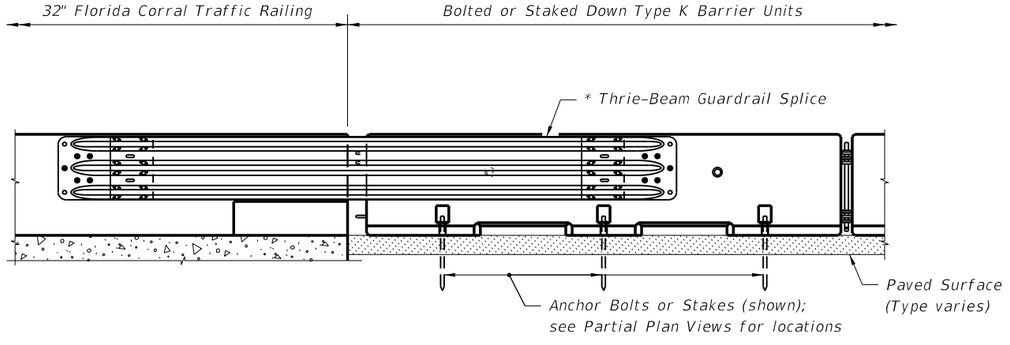

PARTIAL ELEVATION VIEW - FLORIDA CORRAL TRAFFIC RAILING

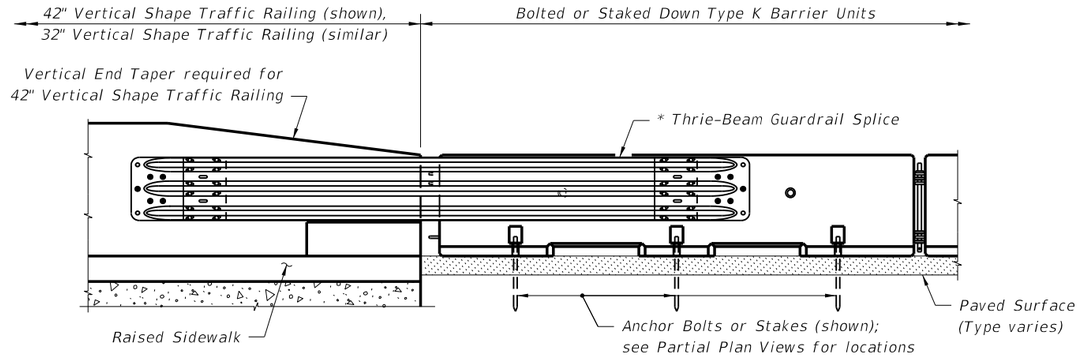

PARTIAL ELEVATION VIEW - VERTICAL SHAPE TRAFFIC RAILINGS

APPROACH TRANSITION SPLICE DETAIL
FOR FLORIDA CORRAL AND VERTICAL SHAPE TRAFFIC RAILINGS

LAST REVISION	REVISION	DESCRIPTION:				
07/01/01			FDOT DESIGN STANDARDS 2013	TYPE K TEMPORARY CONCRETE BARRIER SYSTEM	INDEX NO. 414	SHEET NO. 10

C:\d\projects\standards\roadway\00400-s\00414-10.dgn
rd960rh
2:00:53 PM
6/28/2012

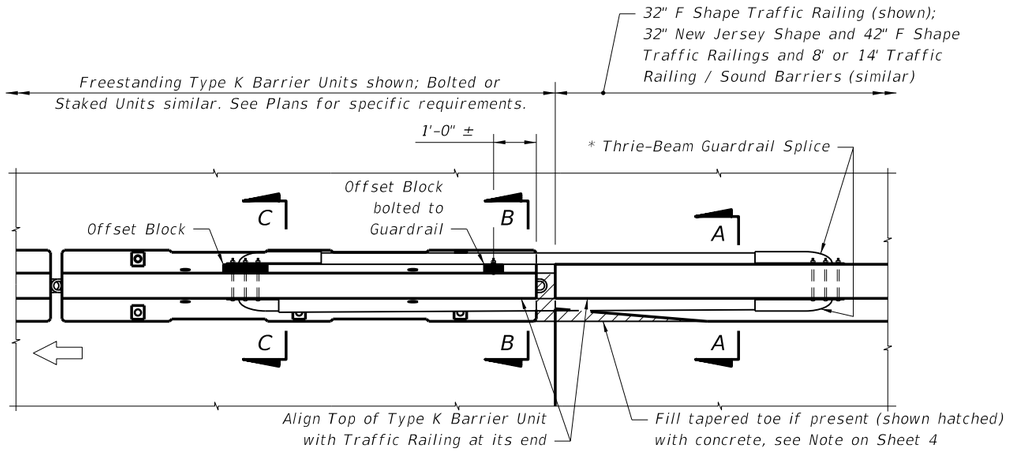

PARTIAL PLAN VIEW

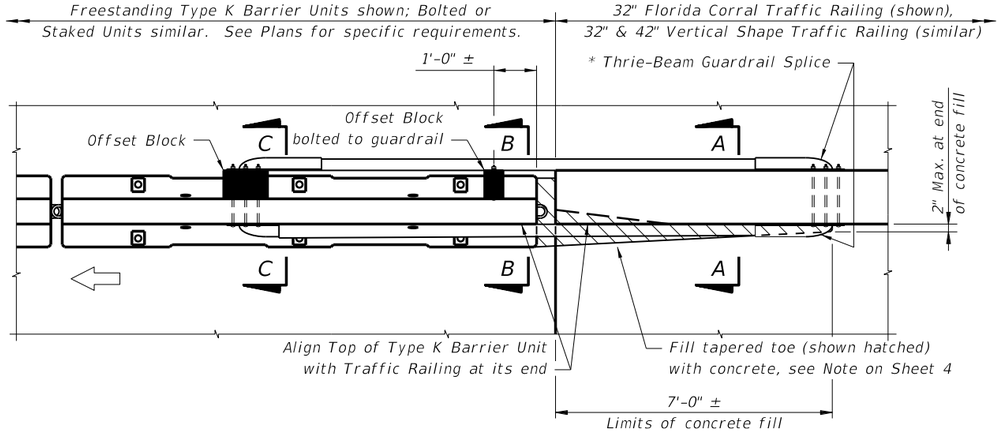

PARTIAL PLAN VIEW

* See Thrie-Beam Guardrail Positioning Detail, Sheet 13 and Notes for Thrie-Beam Guardrail Splice Installations, Sheet 4.

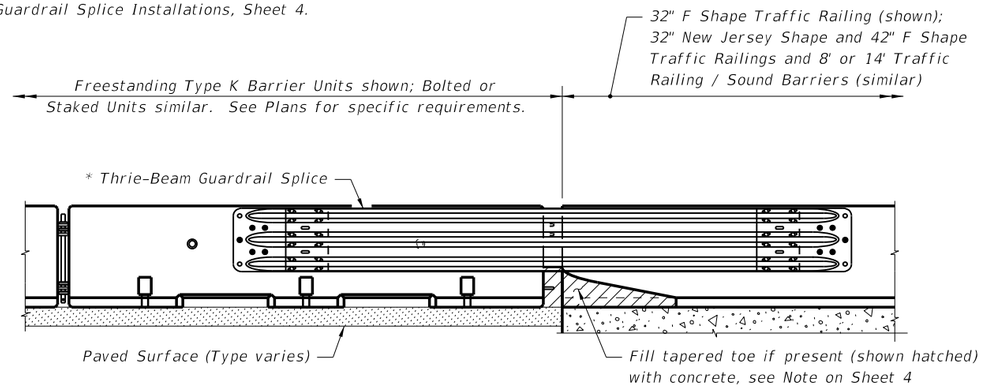

PARTIAL ELEVATION VIEW

Cross References:
See Sheet 13 for Section A-A,
Section B-B and Section C-C.

TRAILING END SPLICE DETAIL
FOR F AND NEW JERSEY SHAPE TRAFFIC RAILINGS AND 8' & 14' TRAFFIC RAILING / SOUND BARRIERS

PARTIAL ELEVATION VIEW

Cross References:
See Sheet 13 for Section A-A,
Section B-B and Section C-C.

TRAILING END SPLICE DETAIL
FOR FLORIDA CORRAL AND VERTICAL SHAPE TRAFFIC RAILINGS

LAST REVISION	REVISION	DESCRIPTION:			INDEX NO.	SHEET NO.
07/01/07			FDOT DESIGN STANDARDS 2013	TYPE K TEMPORARY CONCRETE BARRIER SYSTEM	414	11

C:\d\projects\standards\roadway\00400-s\00414-11.dgn
rd960rh
2:00:56 PM
6/28/2012

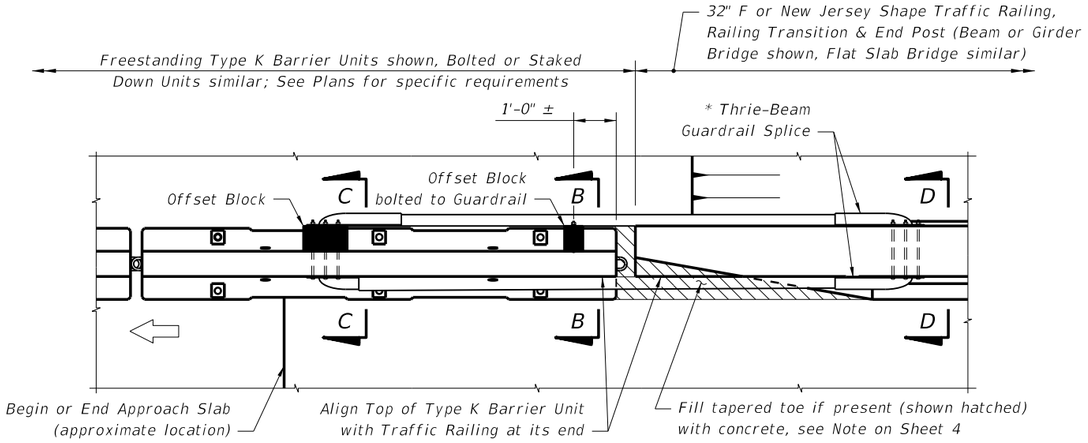

PARTIAL PLAN VIEW

* See Thrie-Beam Guardrail Positioning Detail, Sheet 13 and Notes for Thrie-Beam Guardrail Splice Installations, Sheet 4.

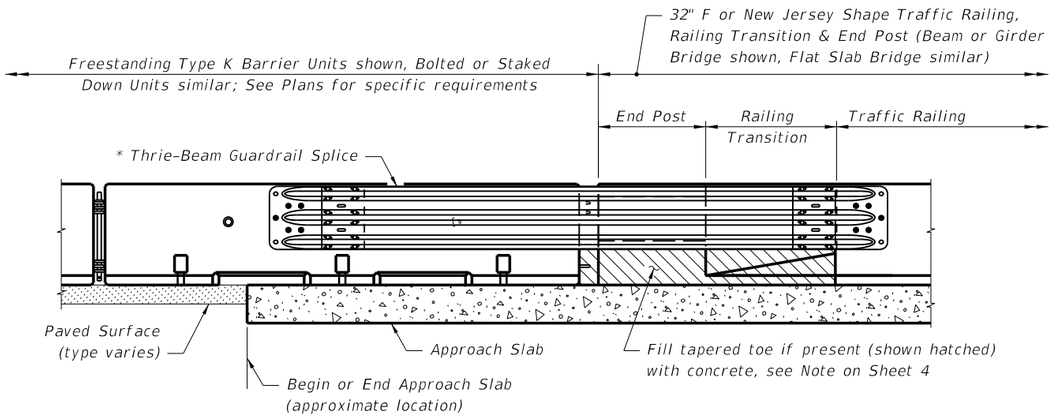

PARTIAL ELEVATION VIEW

Cross References:
See Sheet 13 for Section B-B,
Section C-C and Section D-D.

TRAILING END SPLICE DETAIL
FOR 32" F AND NEW JERSEY SHAPE TRAFFIC RAILINGS WITH RAILING TRANSITION AND END POST

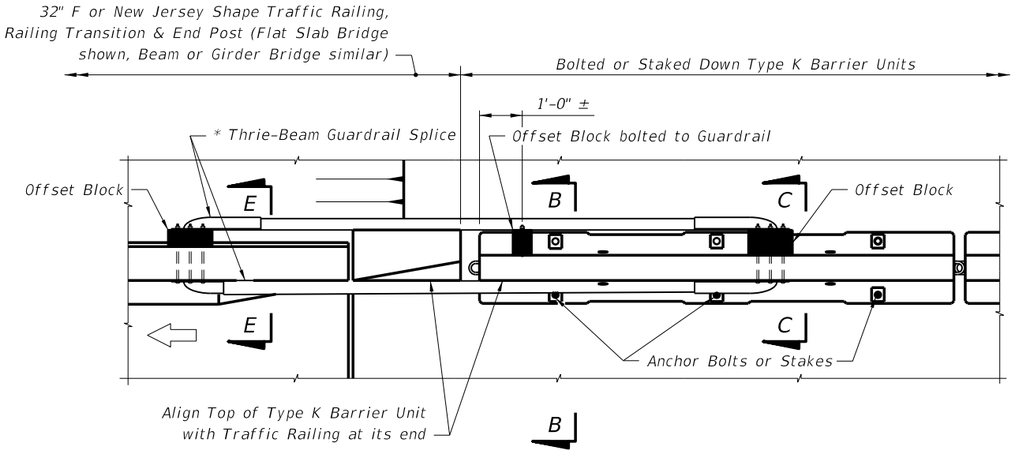

PARTIAL PLAN VIEW

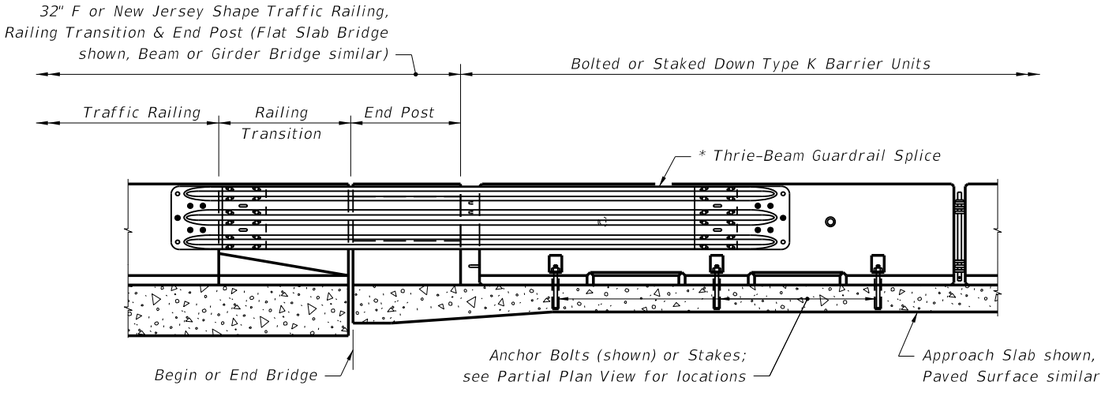

PARTIAL ELEVATION VIEW

Cross References:
See Sheet 13 for Section B-B,
Section C-C and Section E-E.

APPROACH TRANSITION SPLICE DETAIL
FOR 32" F AND NEW JERSEY SHAPE TRAFFIC RAILINGS WITH RAILING TRANSITION AND END POST

C:\d\projects\standards\roadway\00400-s\00414-12.dgn
rd960rh
2:00:58 PM
6/28/2012

LAST REVISION	REVISION	DESCRIPTION:				
07/01/07			FDOT DESIGN STANDARDS 2013	TYPE K TEMPORARY CONCRETE BARRIER SYSTEM	INDEX NO. 414	SHEET NO. 12

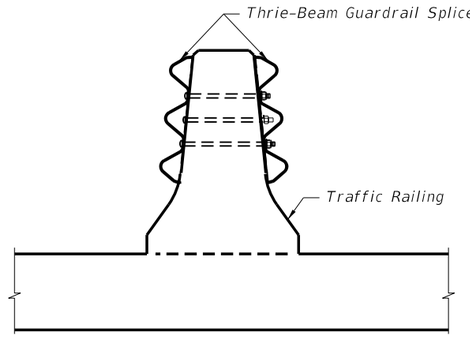

SECTION A-A
32" F Shape Median Traffic Railing (shown), Median Concrete Barrier Wall (similar)

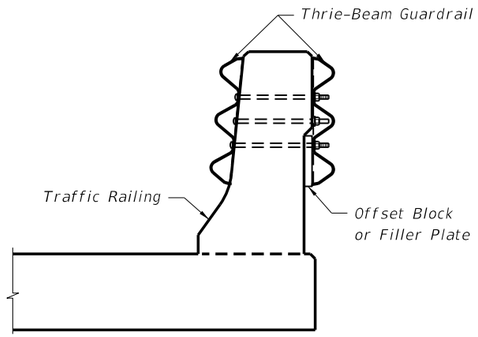

SECTION A-A
32" F Shape Traffic Railing (shown), 42" Traffic Railing and 8' & 14' Traffic Railing / Sound Barriers (similar)

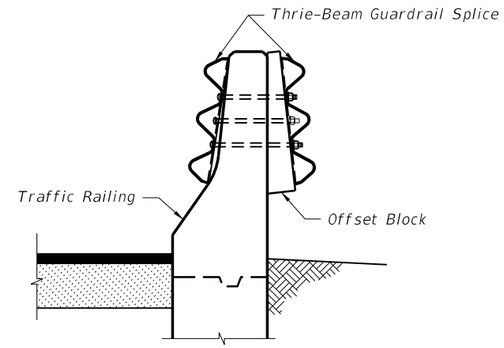

SECTION A-A
32" New Jersey Shape Concrete Barrier Wall (shown), 32" New Jersey Shape Traffic Railing & other Narrow Traffic Railings (similar)

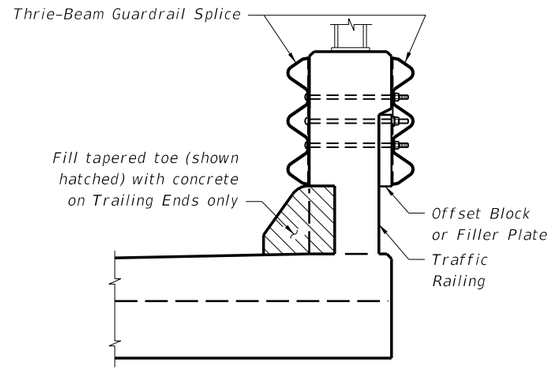

SECTION A-A
32" & 42" Vertical Shape Traffic Railing (shown), Florida Corral Traffic Railing (similar)

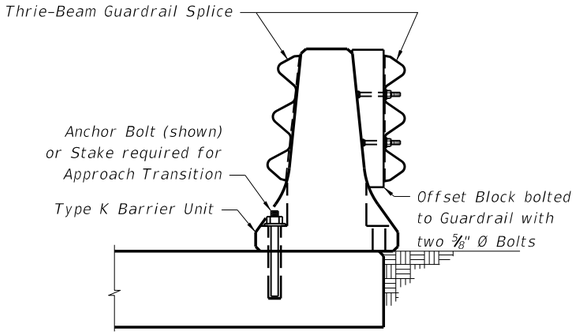

SECTION B-B
Adjacent to Shoulder Traffic Railings

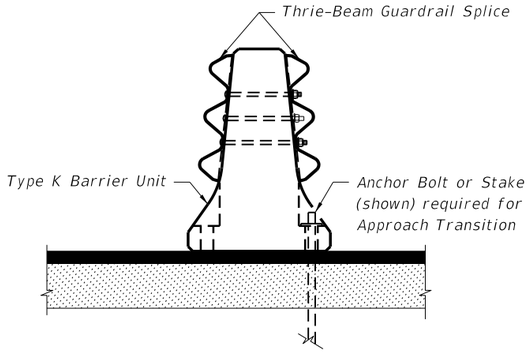

SECTION C-C
Adjacent to 32" F or New Jersey Shape Median Traffic Railing or Median Concrete Barrier Wall

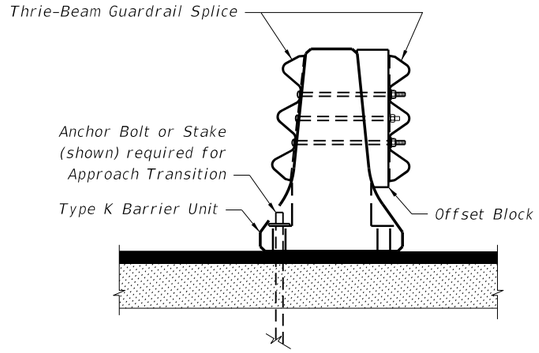

SECTION C-C
Adjacent to Shoulder Traffic Railings

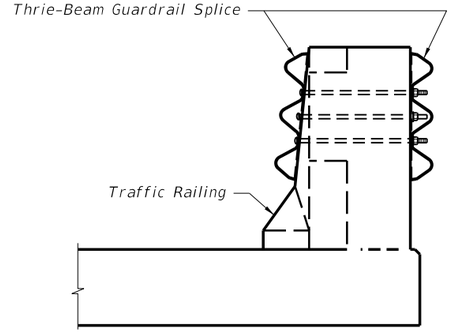

SECTION D-D
32" F or New Jersey Shape Traffic Railing, Railing Transition & End Post

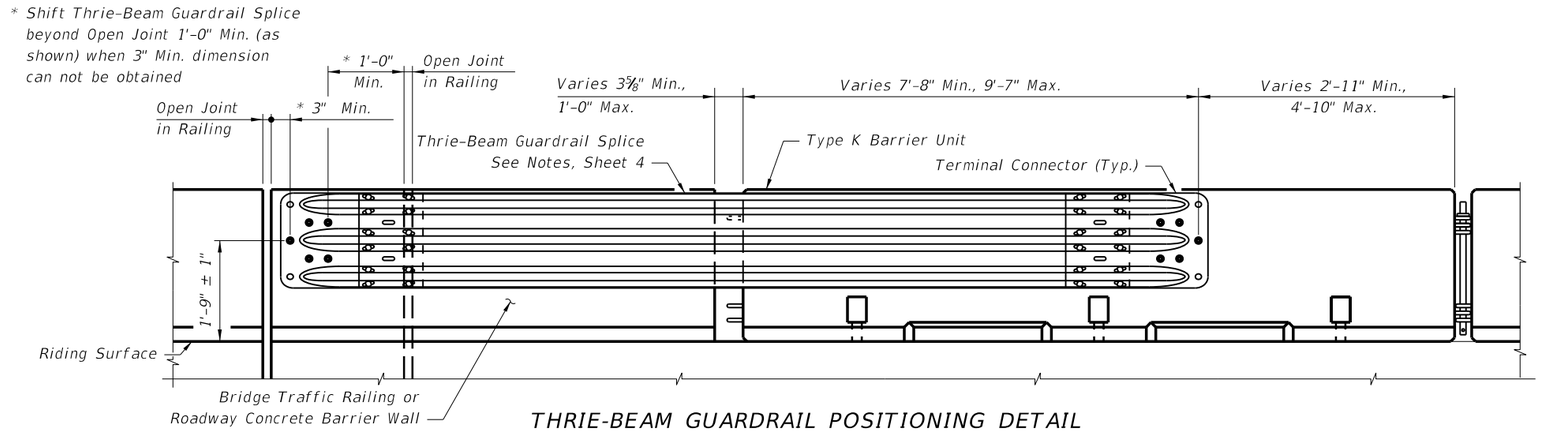

THRIE-BEAM GUARDRAIL POSITIONING DETAIL

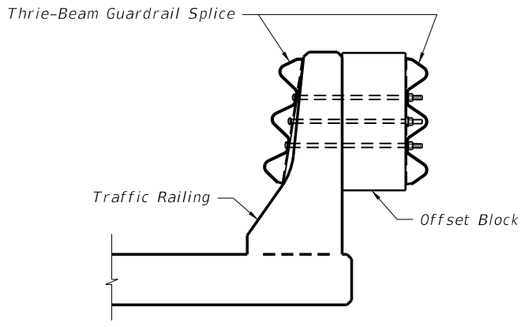

SECTION E-E
32" New Jersey Shape Traffic Railing (shown), 32" F Shape Traffic Railing (similar)

C:\d*projects\standards\roadway\00400-s\00414-13.dgn rd960rh 2:01:00 PM 6/28/2012

LAST REVISION	REVISION	DESCRIPTION:				
07/01/07			FDOT DESIGN STANDARDS 2013	TYPE K TEMPORARY CONCRETE BARRIER SYSTEM	INDEX NO. 414	SHEET NO. 13

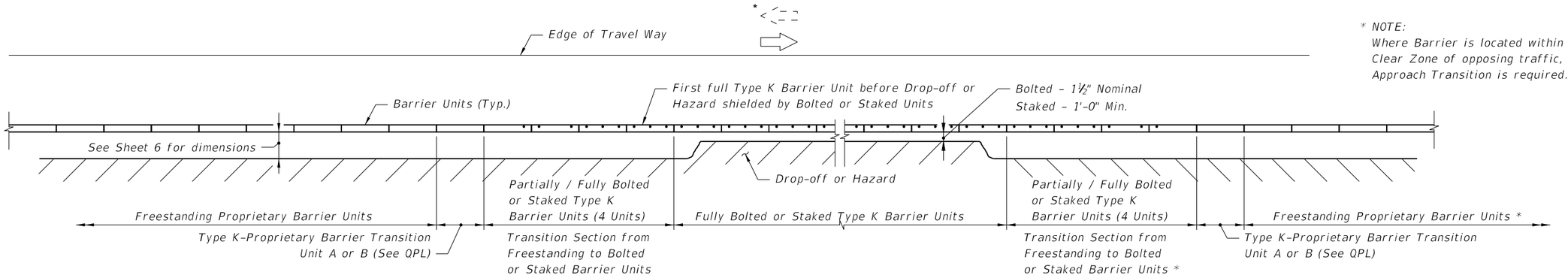

* NOTE:
Where Barrier is located within Clear Zone of opposing traffic, Approach Transition is required.

APPROACH TRANSITION FROM FREESTANDING PROPRIETARY TEMPORARY BARRIERS TO BOLTED OR STAKED DOWN TYPE K TEMPORARY CONCRETE BARRIERS

LEGEND:

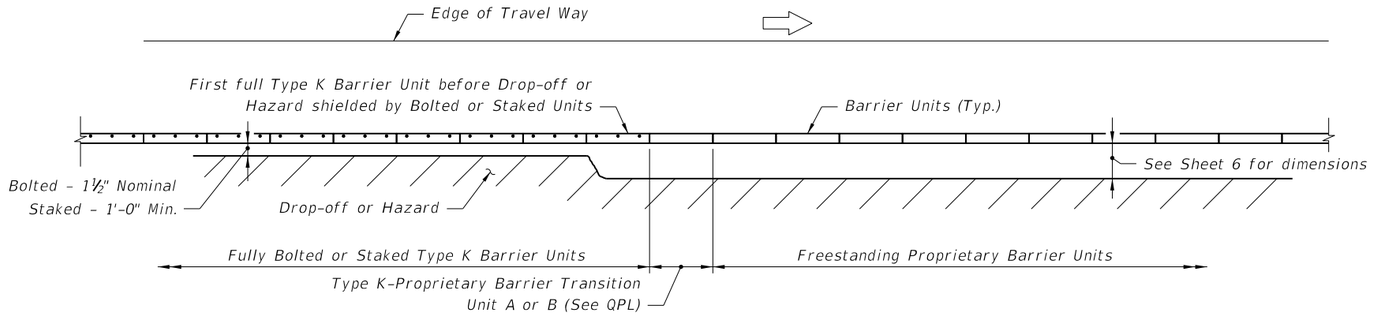

TRAILING END TRANSITION FROM BOLTED OR STAKED DOWN TYPE K TEMPORARY CONCRETE BARRIERS TO FREESTANDING PROPRIETARY TEMPORARY BARRIERS

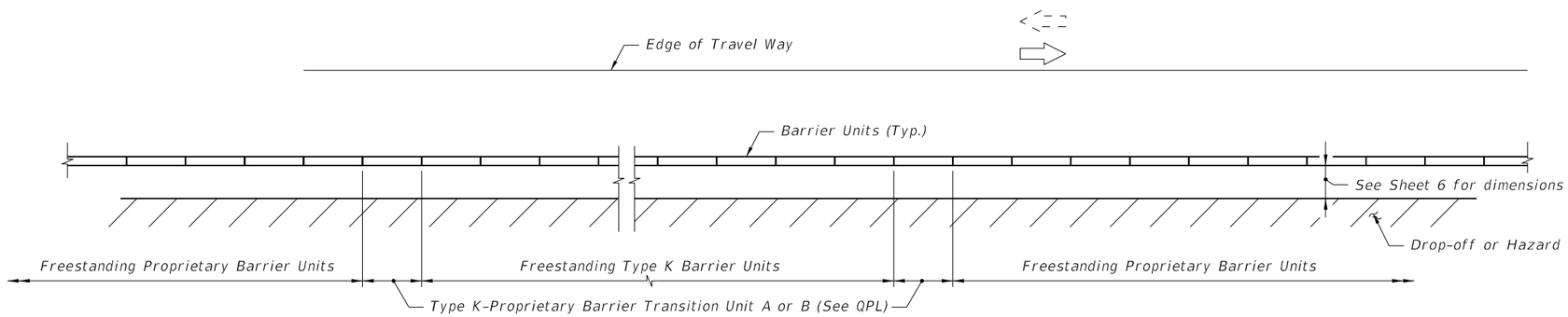

APPROACH AND TRAILING END TRANSITIONS FROM FREESTANDING TYPE K TEMPORARY CONCRETE BARRIERS TO FREESTANDING PROPRIETARY TEMPORARY BARRIERS

TYPE K-PROPRIETARY TEMPORARY CONCRETE BARRIER TRANSITIONS

LAST REVISION	REVISION	DESCRIPTION:		FDOT DESIGN STANDARDS 2013	TYPE K TEMPORARY CONCRETE BARRIER SYSTEM	INDEX NO.	SHEET NO.
07/01/07						414	14

6/28/2012 2:01:02 PM rd960rh C:\d\projects\standards\roadway\00400-s\00414-14.dgn

* NOTE:
Where Barrier is located within Clear Zone of opposing traffic, Approach Transition is required.

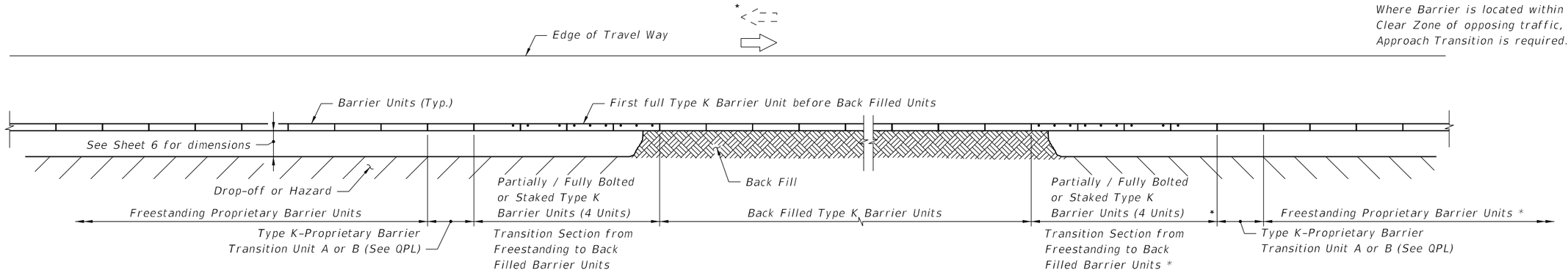

APPROACH TRANSITION FROM FREESTANDING PROPRIETARY TEMPORARY BARRIERS TO BACK FILLED TYPE K TEMPORARY CONCRETE BARRIERS

LEGEND:

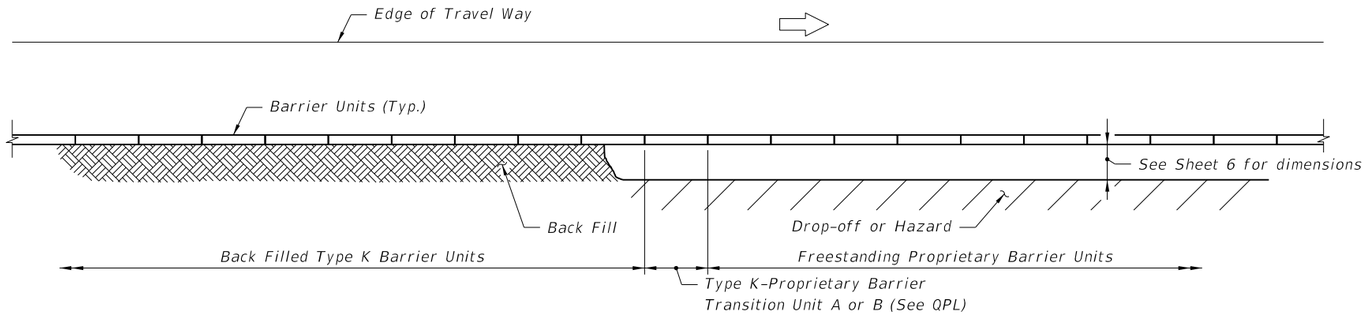

TRAILING END TRANSITION FROM BACK FILLED TYPE K TEMPORARY CONCRETE BARRIERS TO FREESTANDING PROPRIETARY BARRIERS

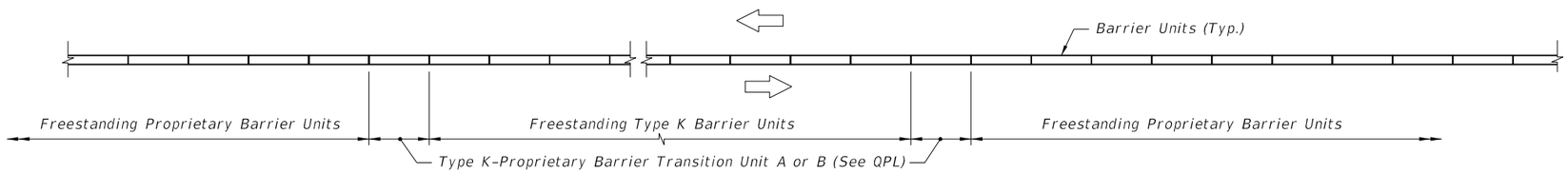

MEDIAN APPROACH AND TRAILING END TRANSITIONS FROM FREESTANDING TYPE K TEMPORARY CONCRETE BARRIERS TO FREESTANDING PROPRIETARY TEMPORARY BARRIERS

TYPE K-PROPRIETARY TEMPORARY CONCRETE BARRIER TRANSITIONS

LAST REVISION	REVISION	DESCRIPTION:		FDOT DESIGN STANDARDS 2013	TYPE K TEMPORARY CONCRETE BARRIER SYSTEM	INDEX NO.	SHEET NO.
07/01/07						414	15

6/28/2012 2:01:05 PM rd960rh C:\d\projects\standards\roadway\00400-s\00414-15.dgn

GENERAL NOTES

1. Temporary concrete barrier systems on roadways may be any of the following:

   a. The FDOT Type K Temporary Concrete Barrier system (Design Standard Index 414). F-Shape Units. For temporary concrete barrier systems on bridges see Design Standard Index No. 414.

   b. Proprietary temporary concrete barrier systems meeting NCHRP Report 350 Test Level 3 criteria which are included on the Qualified Products List.

2. Barrier units of dissimilar types may be interconnected within a single line barriers using transition units.

3. Alignment, length of need, anchorage and end treatment shall be in accordance with this Index.

4. Temporary concrete barrier units shown herein shall not be used for permanent barrier wall construction regardless of unit length.

5. If the plans specify Barrier (Temporary) (Type K), substitution with other barrier types is not permitted.

6. If the plans specify temporary concrete barrier system, substitution with water filled barriers is not permitted.

7. Where existing pavement is not present, construct an Asphalt Pad using Miscellaneous Asphalt Pavement. Cost of the Asphalt Pad to be included in the cost of the Barrier system.

8. Type C Steady-Burn Lights are to be mounted on top of temporary concrete barriers that are used as barriers along traveled ways in work zones. The lights are to be spaced at 50' centers in transitions, 100' centers on curves and 200' centers on tangent roadways. For additional information refer to Index 600.

9. Barrier units used for work zone traffic control and other temporary applications shall be paid for under the contract unit price for Barrier (Temporary), LF. Type C Steady-Burn Lights shall be paid for under the contract unit price for Lights, Temporary, Barrier Mount (Steady-Burn), ED.

10. Deflection space shall be clear of any construction debris, stockpiled materials, equipment, and objects.

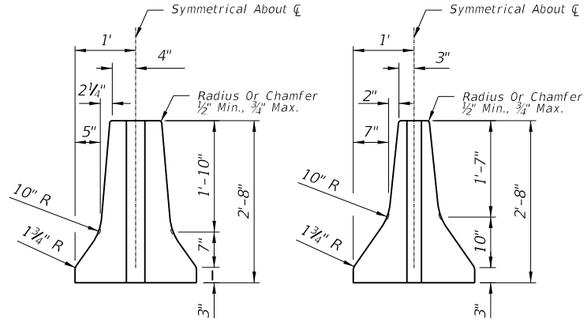

F-SHAPE N.J. SHAPE

END VIEWS

REINFORCEMENT AND OTHER UNIT FABRICATION DETAILS NOT SHOWN.

PERMITTED BARRIER UNIT END VIEWS

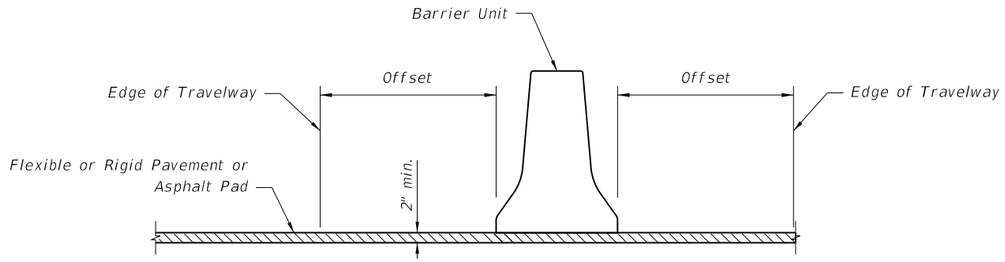

MEDIAN INSTALLATION

OFFSET AND DEFLECTION SPACE REQUIREMENTS				
Installation	Shielding	Work Zone Speed	Offset to Travelway	Deflection Space
Right Shoulder	Above Ground Hazards	45 mph or Less	1' min, 2' preferred	2' min.
		50 mph and Greater	2' min, 4' preferred	4' min.
	Drop-Off Hazards	45 mph or Less	1' min, 2' preferred	2' min.
		50 mph and Greater		
		a. Drop-offs 4' or Less and NO traffic below	2' min, 4' preferred	2' min.
		b. All drop-off conditions other than 'a'	2' min, 4' preferred	4' min.
Separating Traffic	Adjacent Opposing Traffic	45 mph or Less	1' min, 2' prefered	1' min., 2' prefered
		50 mph and Greater	2' min, 4' preferred	2' min., 4' preferred

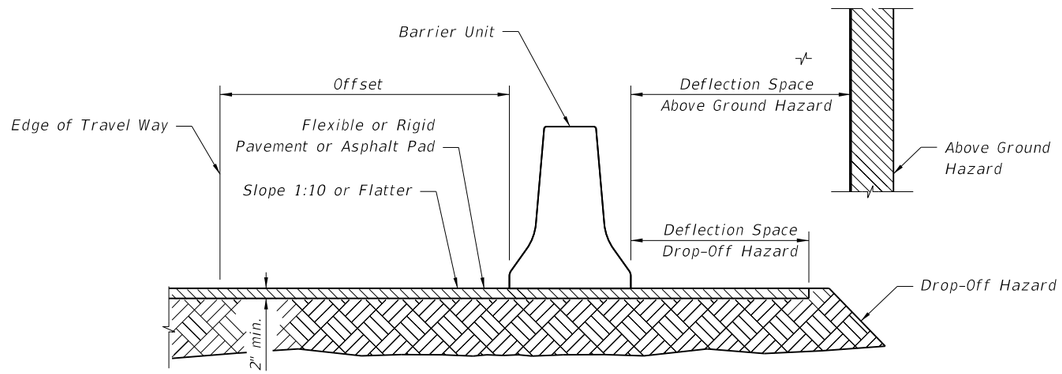

ROADWAY INSTALLATION

C:\d\projects\standards\roadway\00400-s\00415.dgn
rd960rh
2:01:13 PM
6/28/2012

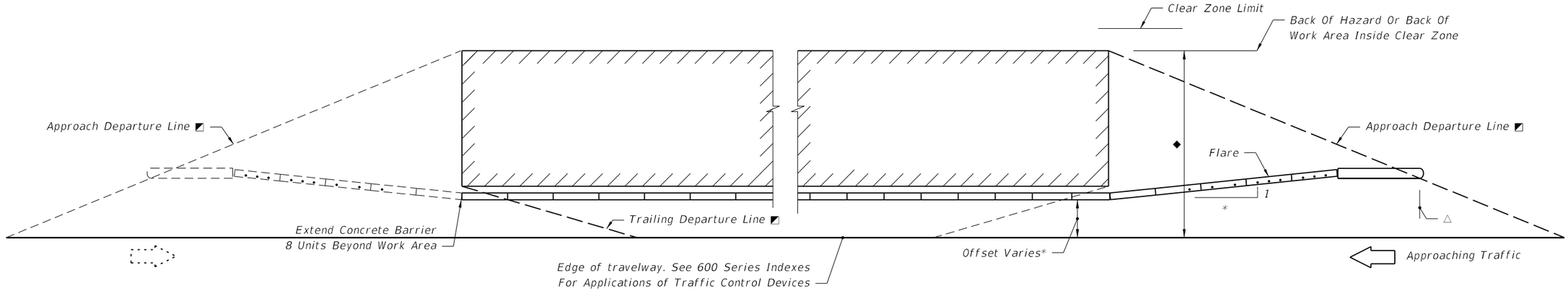

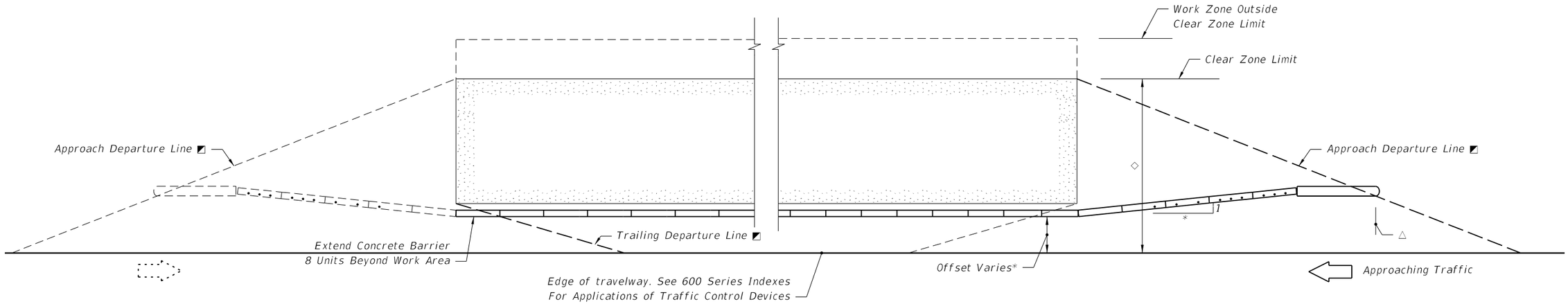

△ The approach departure line location is determined by the line intersect with the back of the hazard or the area to be shielded, however the intersect offset distance is not to be beyond the clear zone limit. The trailing departure line is determined by the line intersect with the front of the downstream end of the hazard or the area to be shielded.

The length of barrier wall need is the distance from the approach departure line intersect with the upstream toe of the temporary concrete barrier wall to the trailing departure line intersect with the downstream toe of the temporary concrete barrier wall.

Where temporary concrete barrier wall Temporary concrete barrier wall end units shall be located at or outside the clear zone or shielded by other structure, earth embedment or a crash cushion.

Proprietary redirective crash cushions designed for use with temporary concrete barriers have the beginning length of need and departure line intersect point indicated on the respective QPL drawing for each proprietary crash cushion. Where redirective crash cushions are located on the departure line by their length of need reference point, the wall upstream end unit must be aligned with the crash cushion, and the wall's end unit secured with bolts or stakes. See Sheets 3 through 6 for configurations requiring end unit anchorage.

* The wall offset from the near traffic lane, wall flare rate and wall flare length are to be in conformance with the alignment called for in the plans and the alignments called for by Department Design Standards specified in the plans; in absence of either plan requirement, the offset shall be as determined by the Engineer, and, unless other flare rates are approved by the Engineer the flare rates to be applied are 1:10 or flatter for speeds ≤ 45 mph and 1:15 or flatter for speeds ≥ 50 mph; see Index No. 642 for other flare rates on freeway facilities.

The surface cross slope approaching the barrier wall and continuing across the required deflection space shall not exceed a rate of 1 vertical: 10 horizontal.

◩ Departure Rates
1:16 For Speeds ≤ 45 mph
1:13 For Speeds ≥ 50 mph

◆ Area Shielded When Work Zone Hazards Or The Work Area Occupy Space Less Than Clear Zone Width

◇ Area Shielded When Work Zone Hazards Or The Work Area Extend To Or Beyond Clear Zone Limit

Dot Indicates Number And Position Of Bolts Or Stakes

ALIGNMENT AND LENGTH OF NEED

LAST REVISION	REVISION	DESCRIPTION:				INDEX NO.	SHEET NO.
01/01/12			FDOT DESIGN STANDARDS 2013	TEMPORARY CONCRETE BARRIER		415	2

C:\d\projects\standards\roadway\00400-s\00415.dgn
rd960rh
2:01:14 PM
6/28/2012

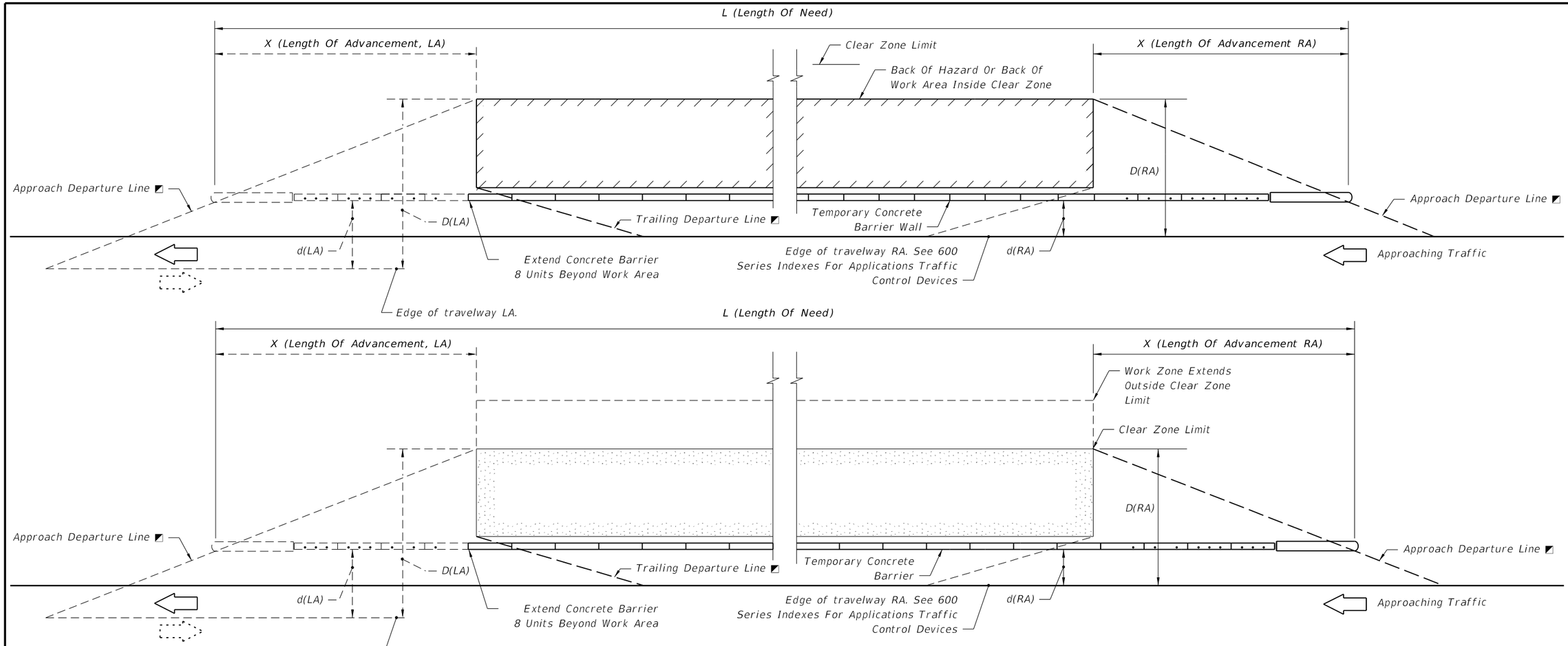

CLEAR ZONE WIDTHS FOR WORK ZONES

The term 'clear zone' describes the unobstructed relatively flat area, impacted by construction, extending outward from the edge of the traffic lane. The table below gives clear zone widths in work zones for medians and roadside conditions other than for roadside canals; where roadside canals are present, clear zone widths are to conform with the distances to canals as described in Volume I, Chapter 4, Section 4.2 and Exhibit 4-A and 4-B of the Plans Preparation Manual.

CLEAR ZONE WIDTHS FOR WORK ZONES		
WORK ZONE SPEED (MPH)	TRAVEL LANES & MULTILANE RAMPS (feet)	AUXILIARY LANES & SINGLE LANE RAMPS (feet)
60–70	30	18
55	24	14
45–50	18	10
30–40	14	10
ALL SPEEDS CURB & GUTTER	4' BEHIND FACE OF CURB	4' BEHIND FACE OF CURB

Work Zone Speed (mph)	X (Length Of Advancement) Ft.
≤45	= 16 (D–d)
≥50	= 13 (D–d)

Equation Variables:

L=(Length of Need) = The distance a longitudinal barrier must be extended in advance of an area of concern in order to adequately shield the hazard.

X=(Length of advancement) = The distance a longitudinal barrier must be extended in advance of an area of concern in order to adequately shield the hazard

D(RA), D(LA) = Distance in feet from the near edge of the travel way to the back of the hazard or the clear zone limit, which ever is less

d(RA), d(LA) = Distance in feet from the near edge of the travel way to the face of the Barrier

Departure line = A line extending from the Point of Departure to the back of a hazard or clear zone. The point at which a barrier intersects the departure line establishes the beginning of both the Length of Need and the Length of Advancement.

LEGEND

LA : Left Approach
RA : Right Approach

◩ Departure Rates
1:16 For Speeds ≤ 45 mph
1:13 For Speeds ≥ 50 mph

Area Shielded When Work Zone Hazards Or The Work Area Occupy Space Less Than Clear Zone Width

Area Shielded When Work Zone Hazards Or The Work Area Extend To Or Beyond Clear Zone Limit

Dot Indicates Number And Position Of Bolts Or Stakes

STRAIGHT ALIGNMENT AND LENGTH OF NEED

LAST REVISION	REVISION	DESCRIPTION:			INDEX NO.	SHEET NO.
01/01/12			FDOT DESIGN STANDARDS 2013	TEMPORARY CONCRETE BARRIER	415	3

C:\d\projects\standards\roadway\00400-s\00415.dgn rd960rh 2:01:15 PM 6/28/2012

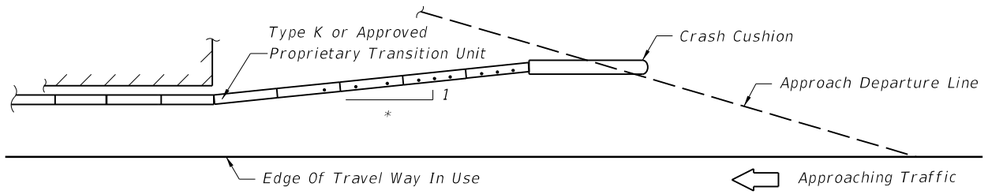

* Flare rates to be applied are 1:10 or flatter
for speeds ≤ 45 mph and 1:15 or flatter
for speeds ≥ 50 mph

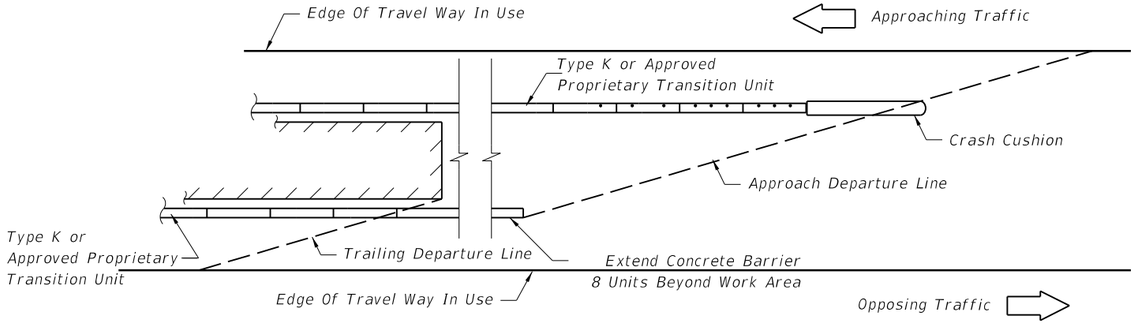

MEDIAN HAZARDS WITHIN CLEAR ZONES BOTH ROADWAYS

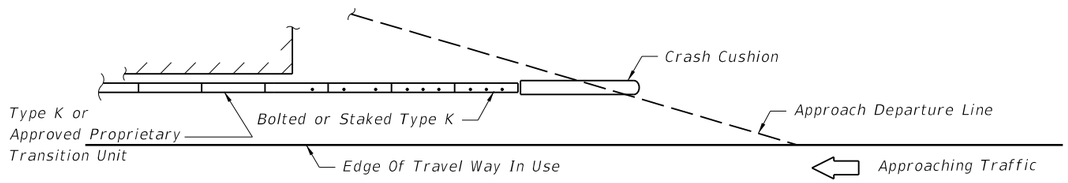

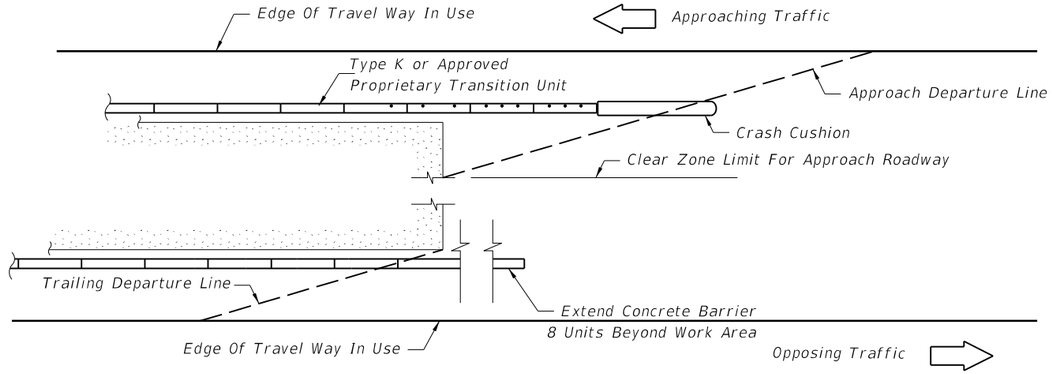

MEDIAN HAZARDS EXTENDS TO OR BEYOND CLEAR ZONES BOTH ROADWAYS

LEGEND

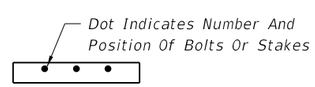

BARRIER END UNIT ANCHORAGE

C:\d\projects\standards\roadway\00400-s\00415.dgn
rd960rh
2:01:15 PM
6/28/2012

LAST REVISION	REVISION	DESCRIPTION:			INDEX NO.	SHEET NO.
07/01/12			FDOT DESIGN STANDARDS 2013	TEMPORARY CONCRETE BARRIER	415	4

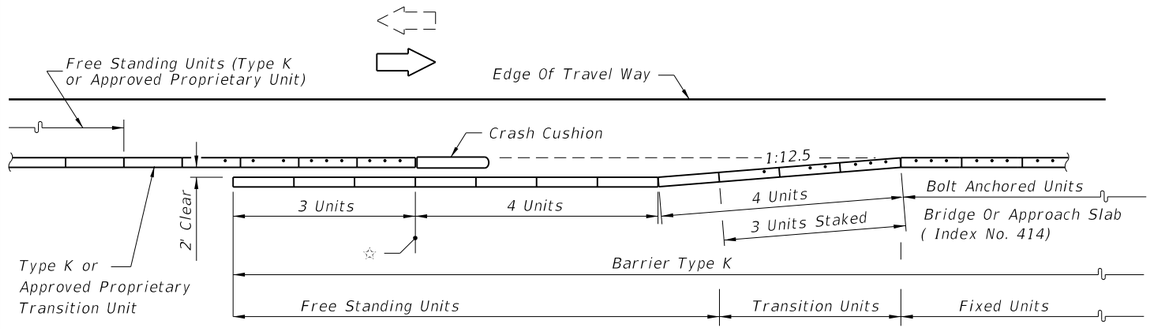

45 MPH OR LESS

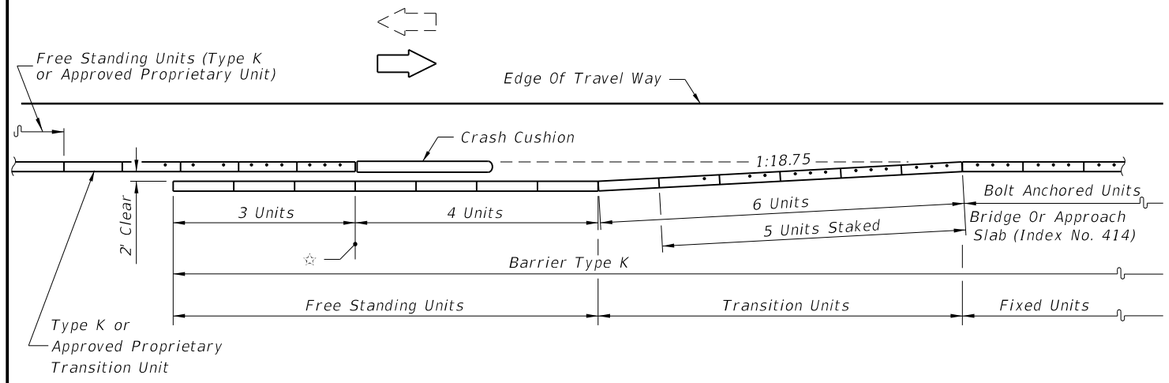

50 MPH OR GREATER

☆ Overlap Reference Line

APPROACH SHOULDER BARRIER ON UNDIVIDED FACILITIES

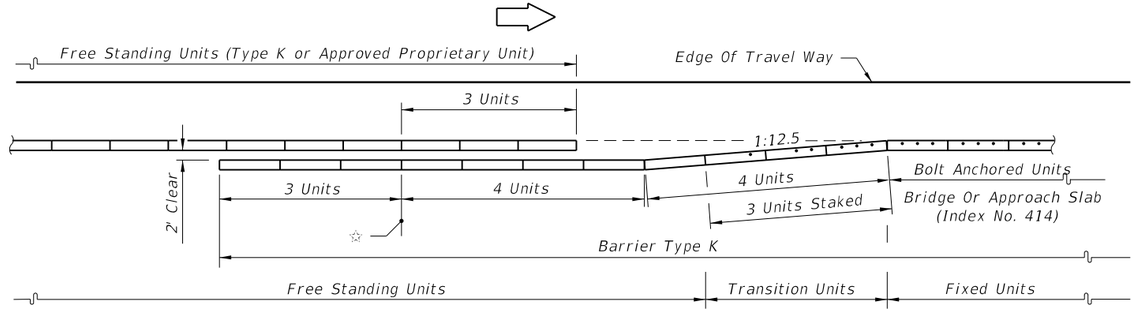

45 MPH OR LESS

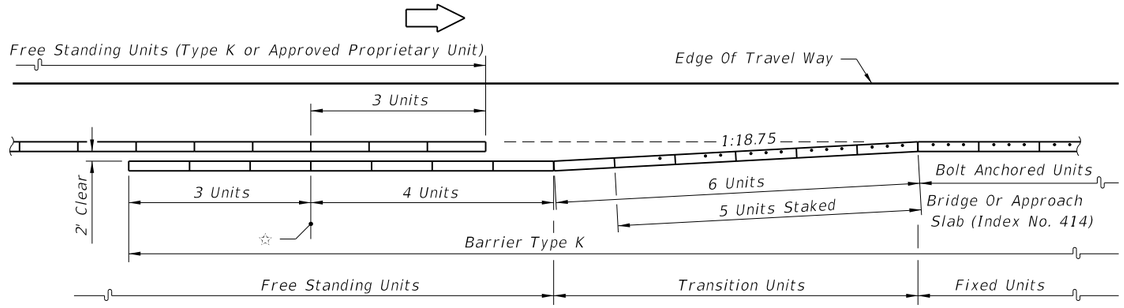

50 MPH OR GREATER

APPROACH SHOULDER BARRIER ON DIVIDED FACILITIES

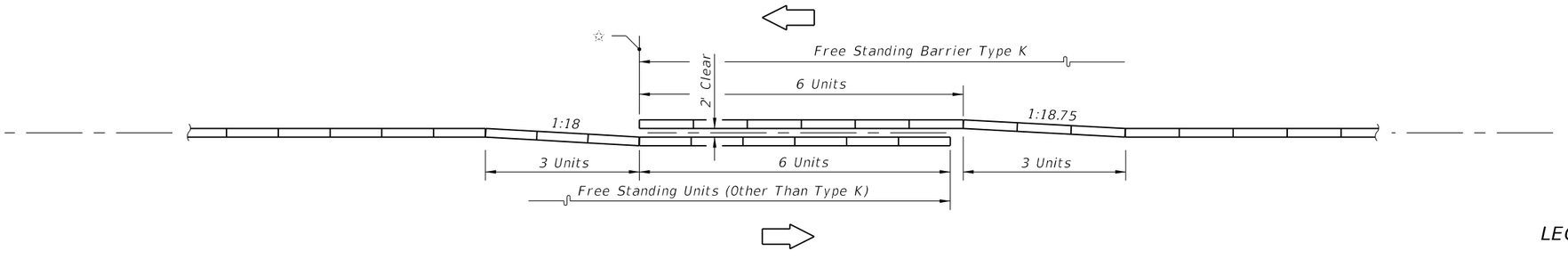

INTERIOR MEDIAN BARRIER

LEGEND

Dot Indicates Number And Position Of Bolts Or Stakes

CONTINUATION OF BARRIER • FROM OTHER TYPE BARRIERS TO BARRIER TYPE K

C:\d\projects\standards\roadway\00400-s\00415.dgn rd960rh 2:01:16 PM 6/28/2012

LAST REVISION	REVISION	DESCRIPTION:				
07/01/12			FDOT DESIGN STANDARDS 2013	TEMPORARY CONCRETE BARRIER	INDEX NO. 415	SHEET NO. 5

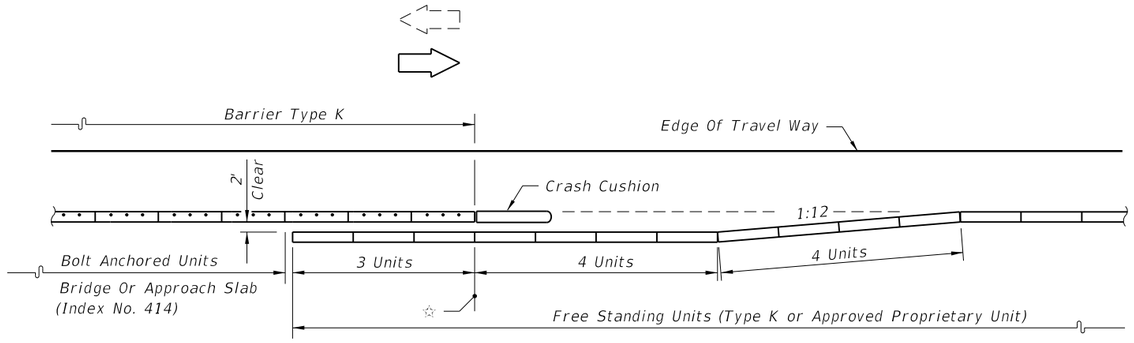

45 MPH OR LESS

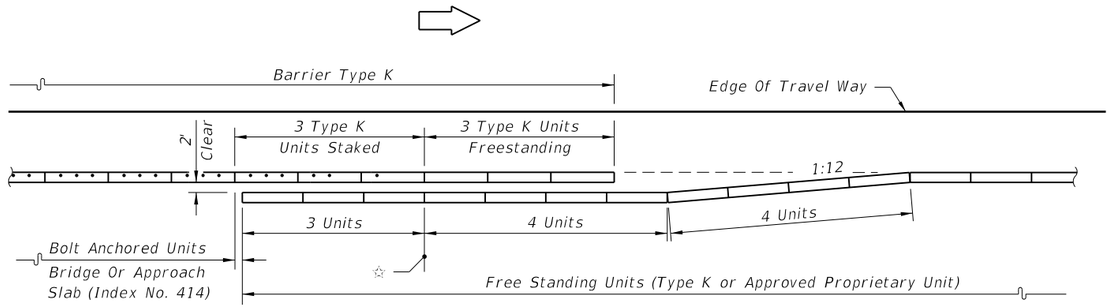

45 MPH OR LESS

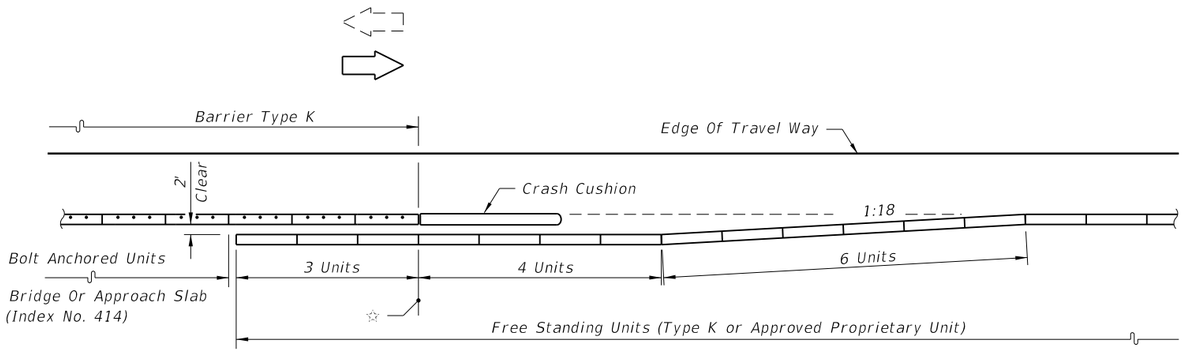

50 MPH OR GREATER

☆ Overlap Reference Line

DEPARTURE (TRAILING) SHOULDER BARRIER ON UNDIVIDED FACILITIES

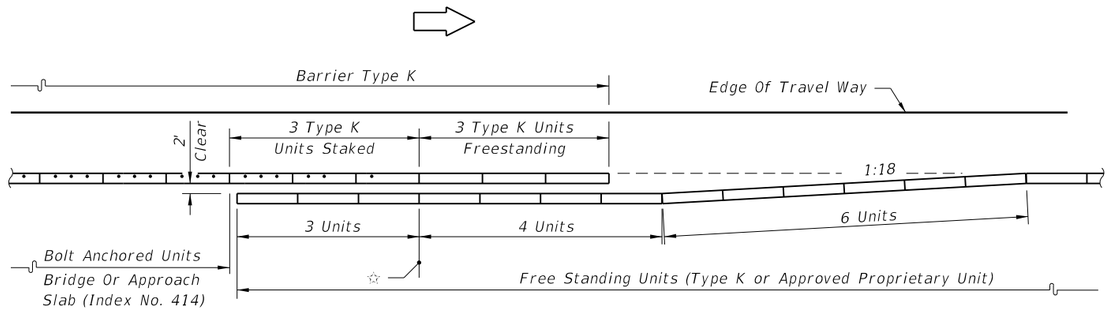

50 MPH OR GREATER

DEPARTURE (TRAILING) SHOULDER BARRIER ON DIVIDED FACILITIES

LEGEND

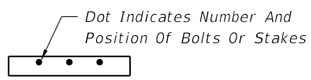

CONTINUATION OF BARRIER • FROM BARRIER TYPE K TO OTHER TYPE BARRIERS

BARRIER TYPE K ON BRIDGES AND APPROACH SLABS

LAST REVISION	REVISION	DESCRIPTION:		FDOT DESIGN STANDARDS 2013	TEMPORARY CONCRETE BARRIER	INDEX NO.	SHEET NO.
07/01/12						415	6

C:\d\projects\standards\roadway\00400-s\00415.dgn
rd960rh
2:01:16 PM
6/28/2012

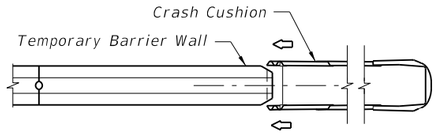

UNIDIRECTIONAL -
SEPARATED TRAFFIC

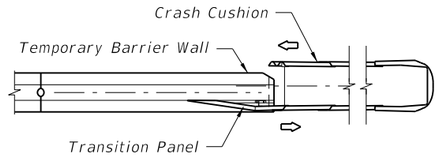

BIDIRECTIONAL -
SEPARATED TRAFFIC

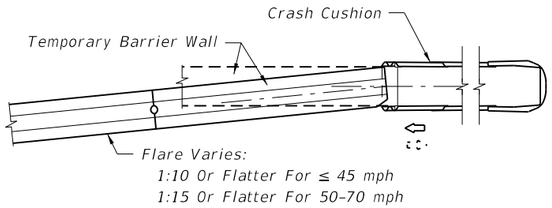

TWO-WAY TRAFFIC WITH CRASH CUSHION LOCATED OUTSIDE
OPPOSING LANE CLEAR ZONE OR ONE-WAY TRAFFIC

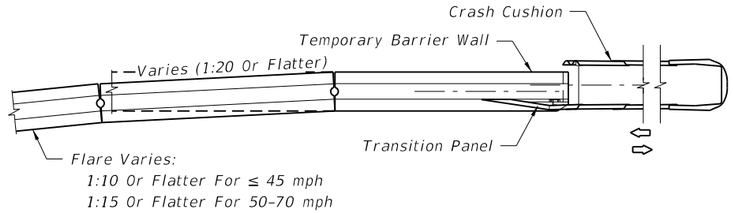

TWO-WAY TRAFFIC WITH CRASH CUSHION LOCATED
WITHIN OPPOSING LANE CLEAR ZONE

SHOULDER - RIGHT OR LEFT (RIGHT SIDE SHOWN)

WALL END TREATMENT WHEN SHIELDED BY A CRASH CUSHION

NOTES FOR WALL END SHIELDING

1. Redirective crash cushions are the principal (standard) device to be used for shielding approach ends of temporary concrete barrier walls. The contractor has the option to construct any of the redirective crash cushions listed on the Qualified Products List at "102 Temporary Crash Cushion", subject to the uses and limitations described on their respective drawings. The barrier wall four end unit abutting crash cushions must be anchored to a paved surface using anchors/stakes in accordance with Standard Index 414.

2. Temporary redirective crash cushions shall be installed in accordance with the manufacturer's specifications and recommendations. Temporary crash cushions can be either new or functionally sound used devices. Performance of intended function is the only condition for acceptance, whether the crash cushion is new, used, refurbished, purchased, leased, rented, on loan, shared between projects, or made up of mixed new and used components.

3. A yellow post mounted Type 1 Object Marker shall be centered 3' in front of the nose of all temporary crash cushions. Mounting hardware shall be in accordance with Index Nos. 11860. The cost of the Object Marker shall be included in the cost of the crash cushion.

4. Equipment, stockpile material, etc., shall not be placed behind the crash cushion.

5. Optional temporary redirective crash cushions are to be paid for per location under the contract unit price for Crash Cushion (Redirective Option) (Temporary), LO.

LEGEND

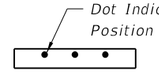

SHIELDING WALL ENDS WITH REDIRECTIVE CRASH CUSHIONS (REDIRECTIVE OPTION)

6/28/2012 2:01:17 PM rd960rh C:\d\projects\standards\roadway\00400-s\00415.dgn

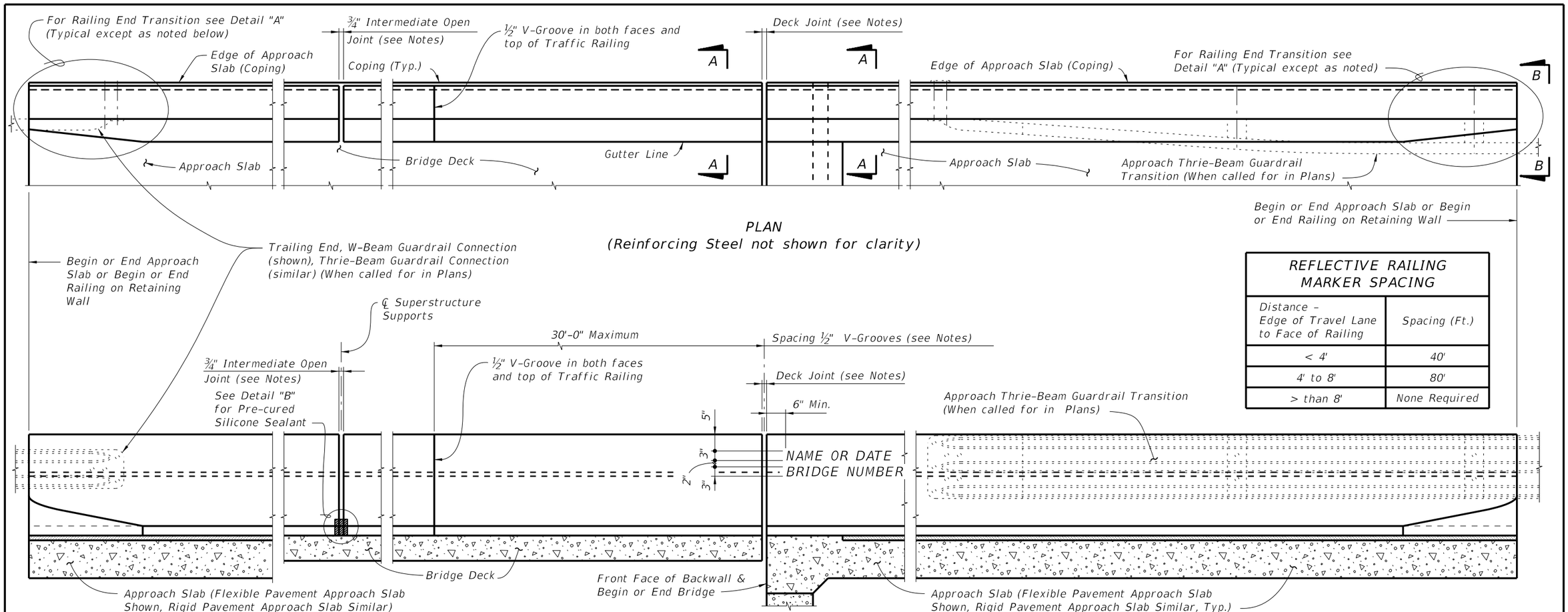

PLAN
(Reinforcing Steel not shown for clarity)

REFLECTIVE RAILING MARKER SPACING	
Distance – Edge of Travel Lane to Face of Railing	Spacing (Ft.)
< 4'	40'
4' to 8'	80'
> than 8'	None Required

ELEVATION OF INSIDE FACE OF RAILING
(Reinforcing Steel not shown for clarity)
(Railing on Bridge Deck and Approach Slab shown, Railing on Retaining Wall similar)

CROSS REFERENCE:
For Section A–A, View B–B and Detail "A", see Sheet 2.
For Detail "B", see Sheet 4.

TRAFFIC RAILING NOTES

This railing has been structurally evaluated to be equivalent or greater in strength to other safety shape railings which have been crash tested to NCHRP Report 350 TL-4 Criteria.

CONCRETE AND REINFORCING STEEL : See Structures Plans General Notes.

MARKERS : Elevation Markers shall be placed on top of the Traffic Railing at the end bents. On bridges longer than 100 ft. one marker shall be placed at each end of the bridge. On bridges 100 ft. or less one marker shall be placed at one end of the bridge only. Markers are to be furnished by the Florida Department of Transportation and installed by the Contractor. The cost of installing the markers shall be included in the Contract Unit Price for the Traffic Railing. The Department will determine the vertical Datum information for the marker.

GUARDRAIL : For Guardrail connection details see Index Nos. 400 and 410.

SUPERELEVATED BRIDGES : At the option of the Contractor the Traffic Railing on superelevated bridges may be constructed perpendicular to the roadway surface. If an adjoining railing is constructed plumb, transition the end of the Traffic Railing from perpendicular to plumb over a minimum distance of 20'-0". The cost of all modifications will be at the Contractor's expense.

PEDESTRIAN AND BICYCLE RAILING : See Index Nos. 821 and 822 for Notes, Details and post spacings for Traffic Railings with Aluminum Pedestrian /Bicycle Bullet Railings.

V-GROOVES : Construct ½" V-Grooves plumb. Space V-Grooves equally between ¾" Open Joints and/or Deck Joints and at V-Groove locations on Retaining Wall footings.

NAME, DATE AND BRIDGE NUMBER : The Name and Bridge Number shall be placed on the Traffic Railing so as to be seen on the driver's right side when approaching the bridge. The Date shall be placed on the driver's left side when approaching the bridge. The Name shall be as shown in the General Notes in the Structures Plans. The Date shall be the year the bridge is completed. For a widening when the existing railing is removed, use both the existing date and the year of the widening. Black plastic letters and figures 3" in height may be used, as approved by the Engineer, in lieu of the letters and figures formed by ⅜" V-Grooves. V-Grooves shall be formed by preformed letters and figures.

REFLECTIVE RAILING MARKERS : Reflective Railing Markers shall meet Specification Section 993. Install markers on top of the Traffic Railing 2" from the face on the traffic side at the spacing shown in the table above. Reflector color (white or yellow) shall match the color of the near edgeline. The cost of the reflective markers shall be included in the Contract Unit Price for the Traffic Railing.

JOINTS : See Plans, Superstructure, Approach Slab and Retaining Walls Sheets for actual dimensions and joint orientation. Provide open Railing Joints at Deck Expansion Joint locations matching the dimensions of the Deck Joint. For treatment of Railings on skewed bridges see Sheet No. 3.

Provide ¾" Intermediate Open Joints at :

(1) – Superstructure supports where slab is continuous.

(2) – Ends of approach slabs when adjacent to retaining walls and at expansion joints on retaining wall junction slabs.

6/28/2012 2:01:22 PM rd960rh C:\d\projects\standards\structures\2013book\00420-1of4.dgn

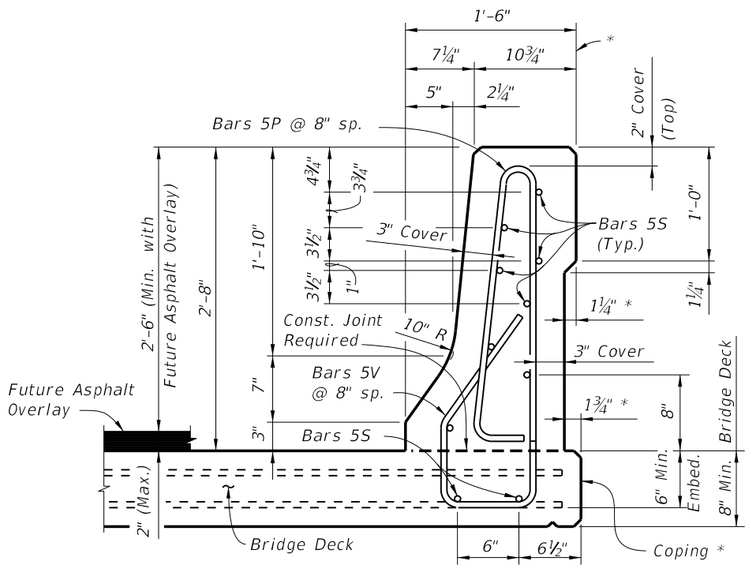

SECTION A-A
TYPICAL SECTION THRU TRAFFIC RAILING
(Section thru Bridge Deck shown, Section thru Approach Slab and Retaining Walls similar)

* *Where railings of adjacent bridges are to be built back to back, the outside vertical plane of the railing and deck/approach slab may coincide along a plane centered 1'-6" from each gutter line. A bond breaker will be required. See Structures Plans, Superstructure Sheets for Details.*

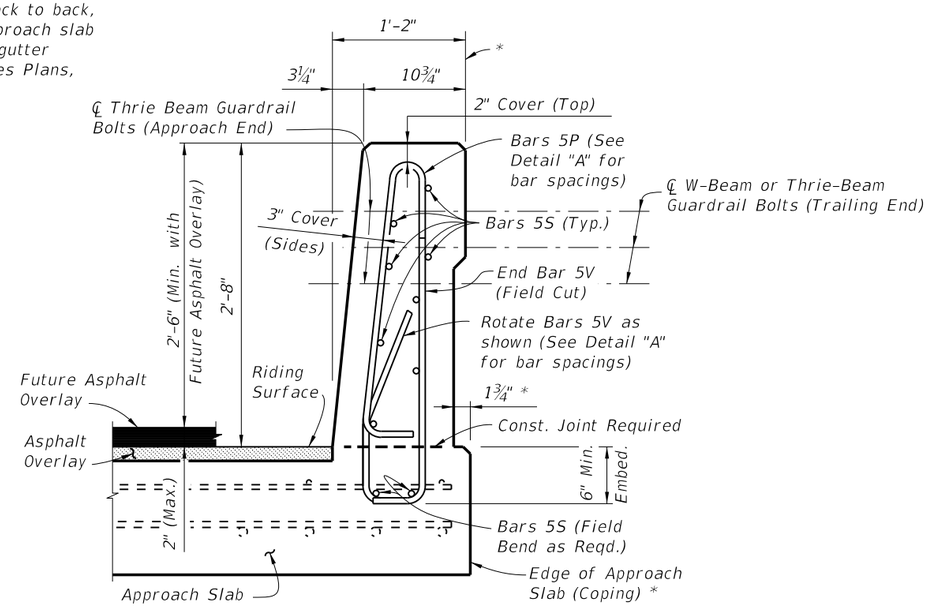

VIEW B-B
(Section thru Approach Slab shown, Section thru Retaining Walls similar)

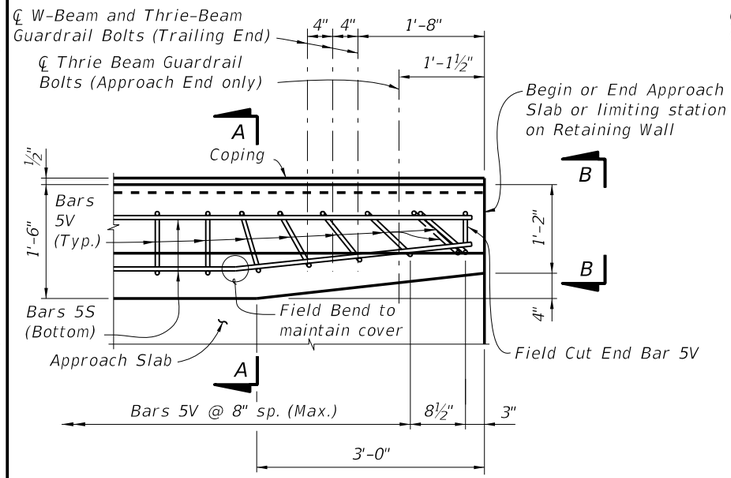

PLAN - Railing End Transition
(Showing Bars 5V and 5S)

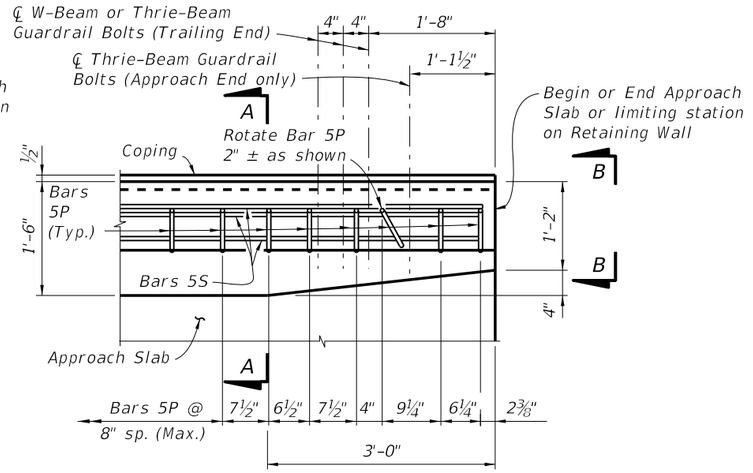

PLAN - Railing End Transition
(Showing Bars 5P and 5S)

NOTES:
Rotate Bars 5V in Railing End Transition to maintain cover. Begin placing Railing Bars 5P and 5V on Approach Slab at the barrier end and proceed toward Begin or End Bridge to ensure placement of guardrail bolt holes. If required, adjustments to the bar spacing for Bars 5P and 5V shall be made immediately adjacent to Begin or End Bridge.

CROSS REFERENCE:
For locations of Section A-A and View B-B see Sheet 1.

DETAIL "A"

(Railing on Approach Slab shown, Railing on Retaining Wall similar)

NOTE: Omit Railing End Transition and Guardrail if Index 410 Concrete Barrier Wall is used beyond the Approach Slab or Retaining Wall. See Structures Plans, Plan and Elevation Sheet and Roadway Plans. If Railing End Transition is omitted, extend Typical Section to end of the Approach Slab or limiting station on Retaining Wall, and space Bars 5P and 5V at 8" (Typ.)

C:\d*projects\standards\structures\2013book\00420-2of4.dgn rd960rh 2:01:24 PM 6/28/2012

LAST REVISION	REVISION	DESCRIPTION:				
07/01/12				FDOT DESIGN STANDARDS 2013	TRAFFIC RAILING - (32" F SHAPE)	INDEX NO. 420 / SHEET NO. 2

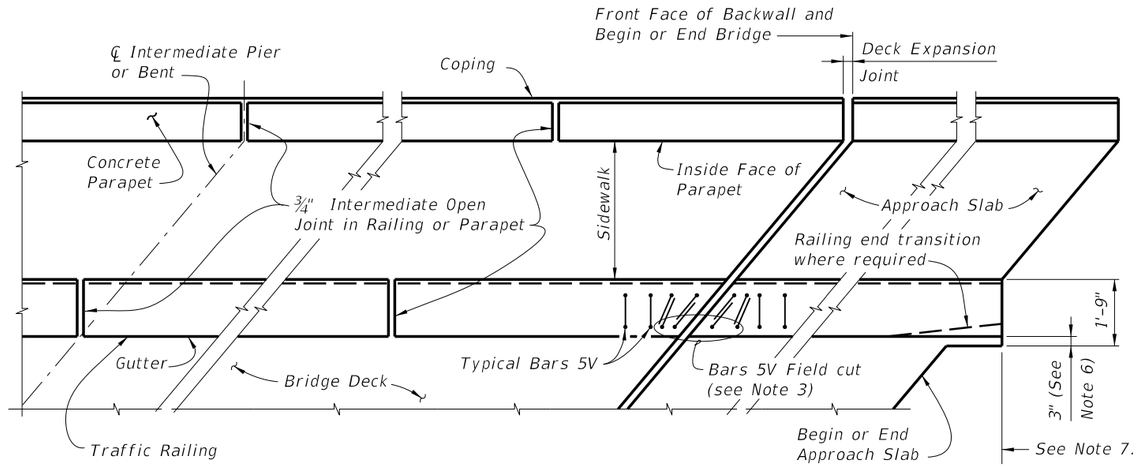

PARTIAL PLAN VIEW OF SKEWED BRIDGE DECK AND APPROACH SLAB WITH SIDEWALK, F SHAPE TRAFFIC RAILING AND PEDESTRIAN/BICYCLE RAILING INDEX NO. 820, 825 or 826, OTHER TRAFFIC RAILINGS SIMILAR

NOTES:
1) Concrete Parapet reinforcement is not effected by skew angle, see Index No. 820 for details.
2) Parapet expansion joint shall match the deck expansion joint which shall be turned perpendicular or radial to the gutter line. See Structures Plans, Superstructure Sheets for details.
3) Traffic Railing reinforcement vertical Bars 5V & 5P may be shifted up to 1" (Max.) and rotated up to 10 degrees as required to allow proper placement. Bars 5V adjacent to expansion joints shall be field adjusted to maintain clearance and spacing, extra Bars 5V will be required. Bars 5V bottom horizontal portion shall be cut so as to maintain maximum bottom horizontal length of bar to each vertical leg being placed, the remainder of bar shall be discarded. Cut Bars 5V may be rotated to maintain clearance.
4) Railing ends at deck expansion joints shall follow the deck joint with allowance for joint movement. Expansion joint at the inside face of parapet shall be turned perpendicular or radial to this line. See Structures Plans, Superstructure and Approach Slab Sheets for details.
5) ¾" Intermediate Open Joints and V-Grooves in railing and parapet shall be placed perpendicular or radial to the gutter line or inside face of parapet line. See Structures Plans, Superstructure Sheets for locations.
6) At begin or end approach slab extend slab at the railing ends 3" (gutter side or back face of railing as required) as shown to provide a base for casting of the railing.
7) Begin placing Railing Bars 5P and 5V on Approach Slab at the railing end and proceed toward Begin or End Bridge to ensure placement of guardrail bolt holes. If required, adjustments to the bar spacing for Bars 5P and 5V shall be made immediately adjacent to Begin or End Bridge.

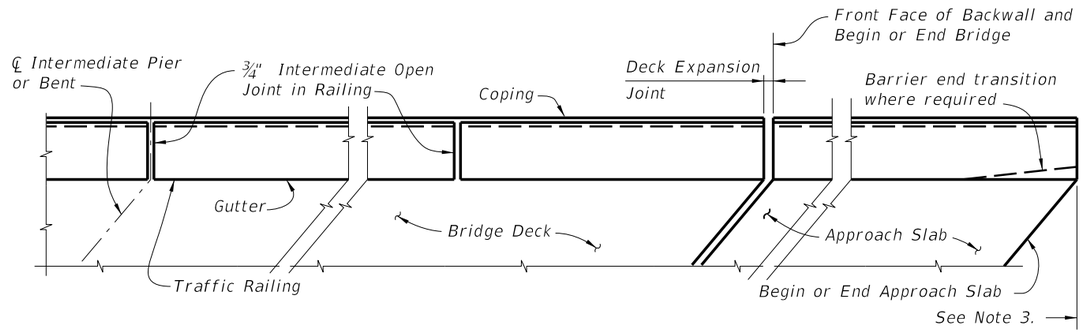

PARTIAL PLAN VIEW OF SKEWED BRIDGE DECK AND APPROACH SLAB WITH F SHAPE TRAFFIC RAILING, OTHER TRAFFIC RAILINGS SIMILAR

NOTES:
1) Railing expansion joint shall match the deck expansion joint which shall be turned perpendicular or radial to the gutter line. See Structures Plans, Superstructure Sheets for details.
2) ¾" Intermediate Open Joints and ½" V-Grooves in railing shall be placed perpendicular or radial to the gutter line. See Structures Plans, Superstructure and Approach Slab Sheets for locations.
3) Begin placing Railing Bars 5P and 5V on Approach Slab at the railing end and proceed toward Begin or End Bridge to ensure placement of guardrail bolt holes. If required, adjustments to the bar spacing for Bars 5P and 5V shall be made immediately adjacent to Begin or End Bridge.

GENERAL NOTES:
1) Work this Sheet with Traffic Railing, Pedestrian/Bicycle Railing, and Approach Slab Indexes as applicable.
2) Deck Expansion Joint at begin or end bridge shown. Deck Expansion Joints at ℄ Pier or Intermediate Bents are similar.
3) Partial Plan Views shown are intended as guides only. See Structures Plans, Superstructure and Approach Slab Sheets for skew angles, joint orientation, dimensions and details.
4) Railings on Raised Sidewalks shall be treated similar to the Partial Plan View of Bridge Deck with Traffic Railing.
5) If Welded Wire Reinforcement is used in lieu of conventional reinforcement, placement of the WWR vertical elements shall be similar to those shown above. Clipping of horizontal elements to facilitate placement shall be minimized where possible. When clipping is required, supplement horizontal elements by lap splicing with deformed bars having an equivalent area of steel.

LAST REVISION	REVISION	DESCRIPTION:		FDOT DESIGN STANDARDS 2013	TRAFFIC RAILING - (32" F SHAPE)	INDEX NO.	SHEET NO.
01/01/11						420	3

6/28/2012 2:01:27 PM rd960rh C:\d\projects\standards\structures\2013book\00420-3of4.dgn

ALTERNATE REINFORCING STEEL (WELDED WIRE REINFORCEMENT) DETAILS

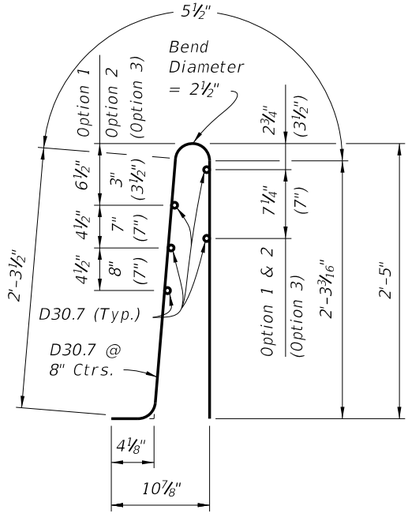

Welded Wire Reinforcement (WWR) Piece No. 2

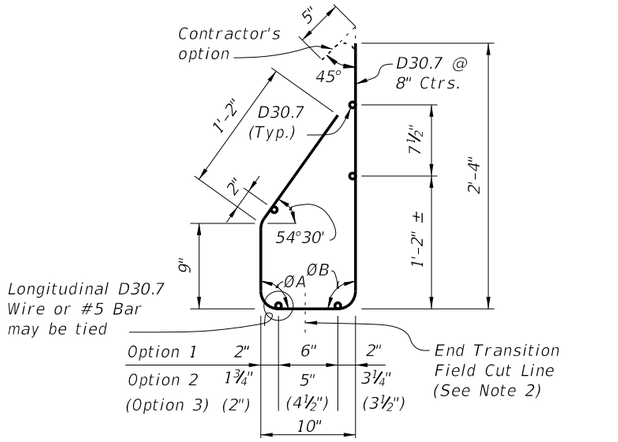

Welded Wire Reinforcement (WWR) Piece No. 1

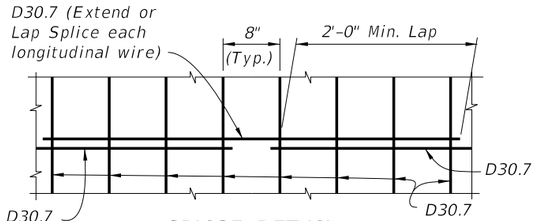

SPLICE DETAIL
(Between WWR Sections)

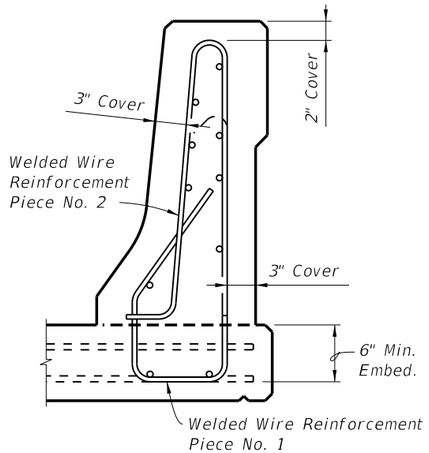

WELDED WIRE REINFORCEMENT NOTES:

1. At the option of the Contractor Welded Wire Reinforcement (WWR) may be utilized in lieu of all Bars 5P, 5S and 5V. Welded Wire Reinforcement shall conform to ASTM A497.
2. Welded Wire Reinforcement at Railing End Transition shall be field bent inward as required (Pieces 1 & 2) to maintain cover. The vertical wires (D30.7) in Piece 1 shall be cut as shown and the gutter side portion bent inward as required to allow placement.

CONVENTIONAL REINFORCING STEEL BENDING DIAGRAMS

ROADWAY CROSS-SLOPE	LOW GUTTER		HIGH GUTTER	
	ØA	ØB	ØA	ØB
0% to 2%	90°	90°	90°	90°
2% to 6%	93°	87°	87°	93°
6% to 10%	96°	84°	84°	96°

ØA and ØB shall be 90° if Contractor elects to place railing perpendicular to the deck and approach slabs.

BILL OF REINFORCING STEEL		
MARK	SIZE	LENGTH
P	5	5'-7"
S	5	As Req'd.
V	5	5'-1"

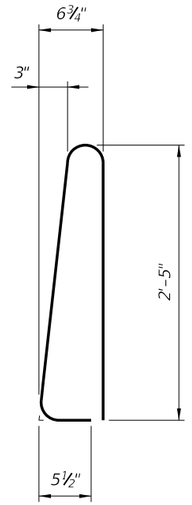

STIRRUP BAR 5P

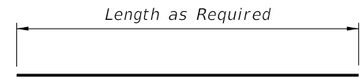

BAR 5S

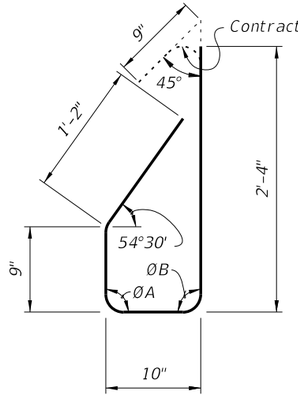

STIRRUP BAR 5V

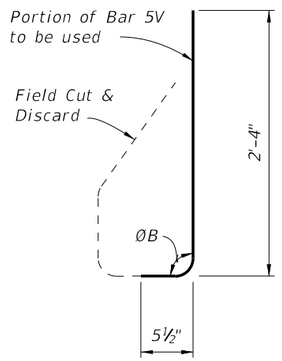

END STIRRUP BAR 5V
To Be Field Cut
(One Required per
Railing End Transition)

REINFORCING STEEL NOTES:

1. All bar dimensions in the bending diagrams are out to out.
2. The 9" and the 2'-4" vertical dimensions shown for Bar 5V are based on a bridge deck without a raised sidewalk. If a raised sidewalk is to be provided, increase these dimensions to achieve a 6" minimum embedment into the bridge deck. See Structures Plans, Superstructure and Approach Slab Sheets.
3. The reinforcement for the railing on a retaining wall shall be the same as detailed above for a 8" deck with ØA = ØB = 90°
4. All reinforcing steel at the open joints shall have a 2" minimum cover.
5. Bars 5S may be continuous or spliced at the construction joints. Bar splices for Bars 5S shall be a minimum of 2'-0".

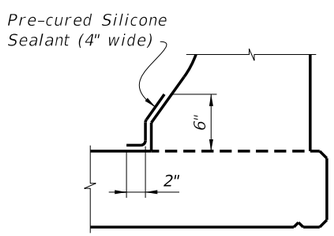

DETAIL "B" - SECTION
AT INTERMEDIATE OPEN JOINT

INTERMEDIATE JOINT SEAL NOTES:

1. At Intermediate Open Joints, seal the lower 6" portion of the open joint with Pre-cured Silicone Sealant in accordance with Specification Section 932.
2. Apply sealant prior to any Class V finish coating and remove all curing compound and loose material from the surface prior to application of bonding agent.
3. The cost of the Pre-cured Silicone Sealant shall be included in the Contract Unit Price for the Traffic Railing.

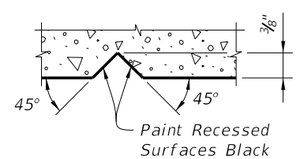

SECTION THRU RECESSED
"V" GROOVE TO FORM INSCRIBED
LETTERS AND FIGURES

ESTIMATED TRAFFIC RAILING QUANTITIES		
ITEM	UNIT	QUANTITY
Concrete	CY/LF	0.104
Reinforcing Steel	LB/LF	27.12

(The above quantities are based on a 2% deck cross slope; railing on low side of deck.)

LAST REVISION	REVISION	DESCRIPTION:				
01/01/11			FDOT DESIGN STANDARDS 2013	TRAFFIC RAILING - (32" F SHAPE)	INDEX NO. 420	SHEET NO. 4

C:\d\projects\standards\structures\2013book\00420-4of4.dgn rd960rh 2:01:30 PM 6/28/2012

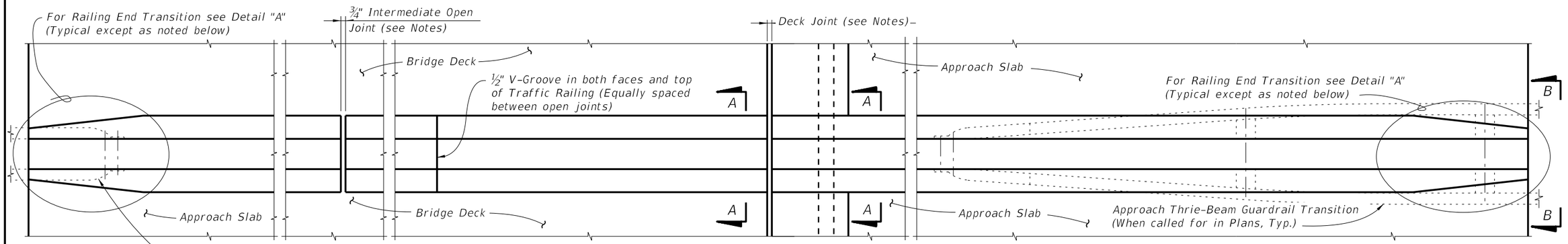

PLAN (Reinforcing Steel not shown for clarity)

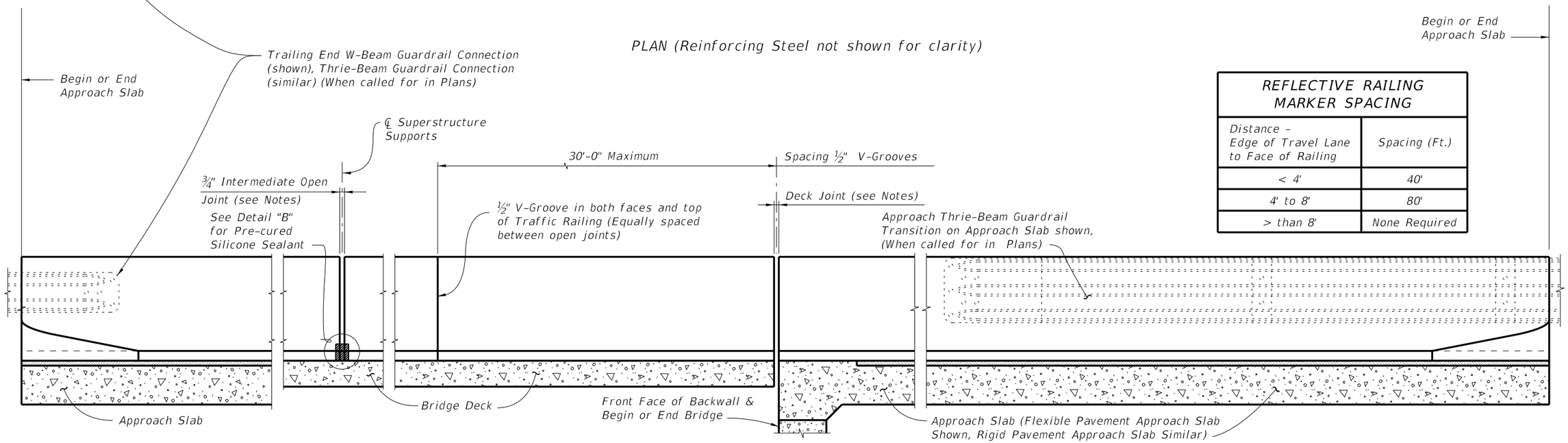

ELEVATION
(Reinforcing Steel not shown for clarity)

REFLECTIVE RAILING MARKER SPACING	
Distance – Edge of Travel Lane to Face of Railing	Spacing (Ft.)
< 4'	40'
4' to 8'	80'
> than 8'	None Required

CROSS REFERENCE:
For Section A-A, View B-B and Detail "A" see Sheet 2.

For Detail "B" see Sheet 4.

TRAFFIC RAILING NOTES

This railing has been structurally evaluated to be equivalent or greater in strength to other safety shape railings which have been crash tested to NCHRP Report 350 TL-4 criteria.

CONCRETE AND REINFORCING STEEL : See Structures Plans, General Notes.
GUARDRAIL : For Guardrail connection details see Index No. 400.
SUPERELEVATED BRIDGES : At the option of the Contractor the Traffic Railing on superelevated bridges may be constructed perpendicular to the roadway surface. The cost of all modifications will be at the Contractor's expense.
REFLECTIVE RAILING MARKERS : Reflective Railing Markers shall meet Specification Section 993. Install markers on top of the Traffic Railing along the centerline at the spacing shown in the table above. Reflector color (white or yellow) shall match the color of the near edgeline. The cost of the reflective markers shall be included in the Contract Unit Price for the Traffic Railing.

JOINTS : See Plans, Superstructure, Approach Slab and Retaining Walls Sheets for actual dimensions and joint orientation. Provide open Railing Joints at Deck Expansion Joint locations matching the dimensions of the Deck Joint. For treatment of Railings on skewed bridges see Sheet No. 3.

Provide ¾" Intermediate Open Joints at :
(1) – Superstructure supports where slab is continuous.

C:\d*projects\standards\structures\2013book\00421-1of4.dgn rd960rh 2:01:32 PM 6/28/2012

LAST REVISION	REVISION	DESCRIPTION:				
01/01/12			FDOT DESIGN STANDARDS 2013	TRAFFIC RAILING - (MEDIAN 32" F SHAPE)	INDEX NO. 421	SHEET NO. 1

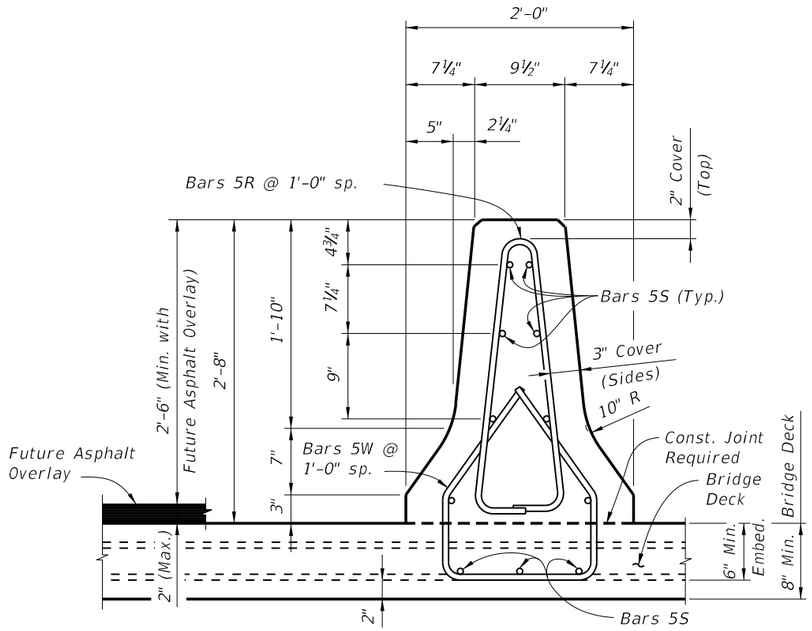

SECTION A-A
TYPICAL SECTION THRU TRAFFIC RAILING
(SECTION THRU BRIDGE DECK SHOWN -
SECTION THRU APPROACH SLAB SIMILAR)

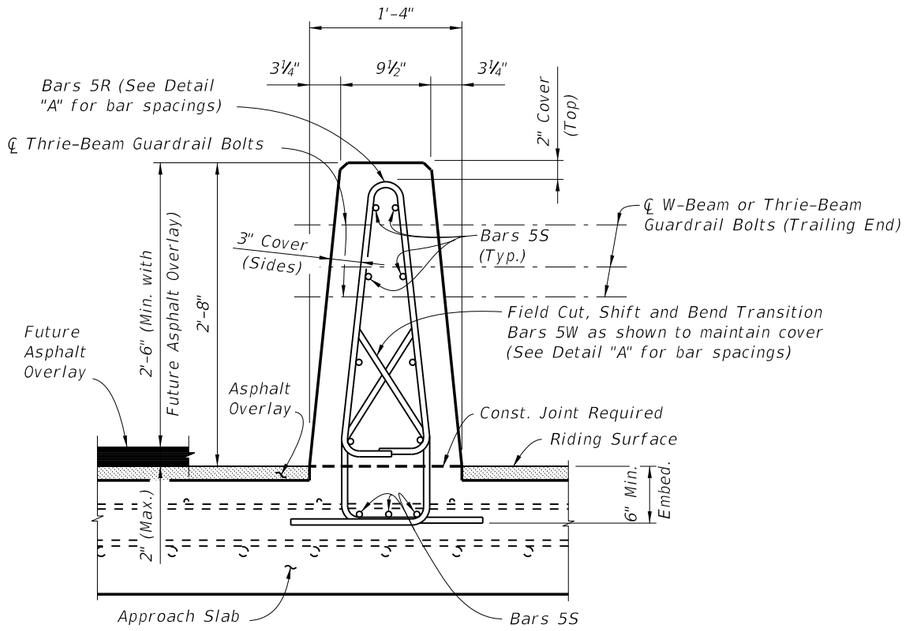

VIEW B-B

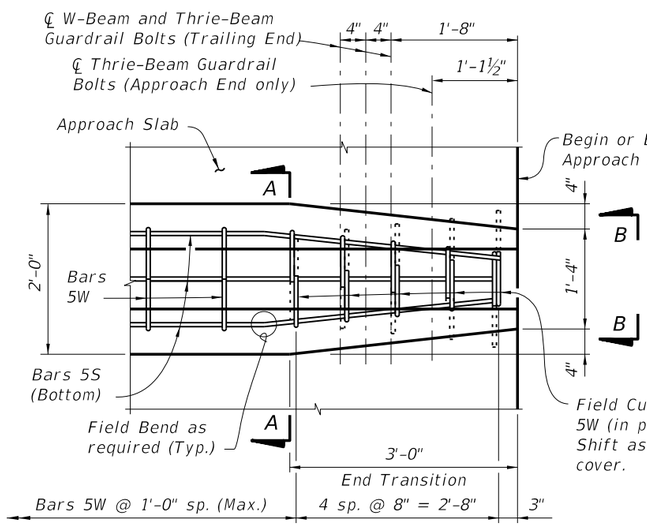

PLAN - Railing End Transition
(Showing Bars 5W and 5S)

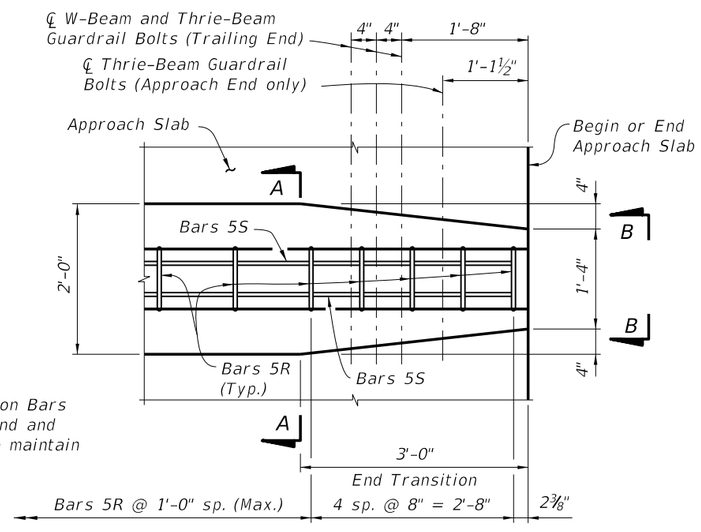

PLAN - Railing End Transition
(Showing Bars 5R and 5S)

NOTE:
Begin placing Railing Bars 5R and 5W on Approach Slab at the railing end and proceed toward Begin or End Bridge to ensure placement of guardrail bolt holes. If required, adjustments to the bar spacing for Bars 5R and 5W shall be made immediately adjacent to Begin or End Bridge. Shift and rotate Bars 5R and 5W as required to maintain cover in Railing End Transition.

Omit Railing End Transition and Guardrail if Index 410 Concrete Barrier Wall is used beyond the Approach Slab. See Structures Plans, Plan and Elevation Sheet and Roadway Plans. If Railing End Transition is omitted, extend Typical Section to the end of Approach Slab and space Bars 5R and 5W at 1'-0" (Typ.)

DETAIL "A"

C:\d\projects\standards\structures\2013book\00421-2of4.dgn rd960rh 2:01:35 PM 6/28/2012

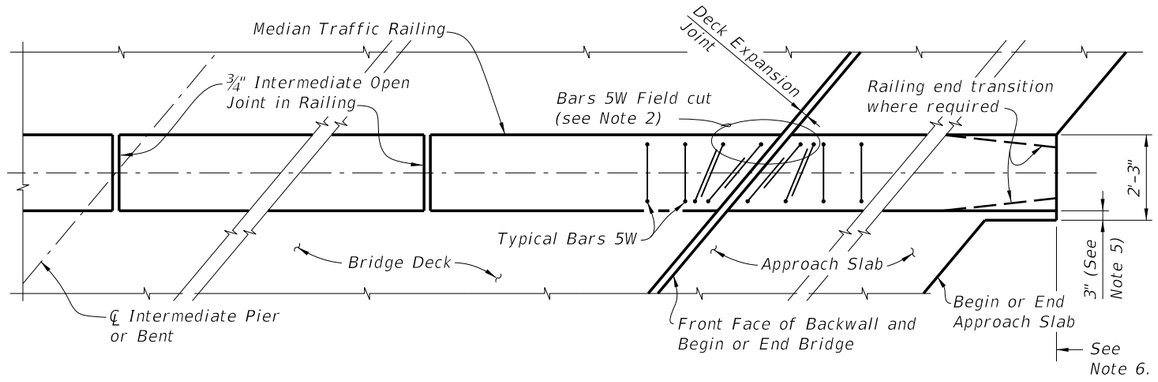

PARTIAL PLAN VIEW OF BRIDGE DECK AND APPROACH SLAB WITH MEDIAN TRAFFIC RAILING

NOTES:

1) Median Traffic Railing reinforcement vertical Bars 5W may be shifted up to 1" (Max.) and rotated up to 10 degrees as required to allow proper placement.

2) Transition Stirrup Bars 5W shall be used as required at railing ends adjacent to expansion joints to facilitate placement of bars in acute corners. Place Transition Bars 5W in a fan pattern to maintain spacing. Rotate bars in 10° (Max.) increments as required.

3) Median Traffic Railing ends at deck expansion joints shall follow the deck joint with allowance for joint movement. See Structures Plans, Superstructure and Approach Slab Sheets for Details.

4) ¾" Intermediate Open Joints and V-Grooves in railing shall be placed perpendicular or radial to the ℄ of the median railing. See Structures Plans, Superstructure and Approach Slab Sheets for locations.

5) At begin or end approach slab extend slab at the median railing ends 3" (open side) as shown to provide a base for casting of the railing.

6) Work this Sheet with Approach Slab Indexes as applicable.

7) Deck Expansion Joint at begin or end bridge shown. Deck Expansion Joints at ℄ Pier or Intermediate Bents are similar.

8) Partial Plan Views shown are intended as guides only. See Structures Plans, Superstructure and Approach Slab Sheets for skew angles, joint orientation, dimensions and details.

9) If Welded Wire Reinforcement is used in lieu of conventional reinforcement, placement of the WWR vertical elements shall be similar to those shown above. Clipping of horizontal elements to facilitate placement shall be minimized where possible. Where clipping is required, supplement horizontal elements by lap splicing deformed bars with an equivalent area of steel.

6/28/2012 2:01:37 PM rd960rh C:\d\projects\standards\structures\2013book\00421-3of4.dgn

ALTERNATE REINFORCING STEEL (WELDED WIRE REINFORCEMENT) DETAILS

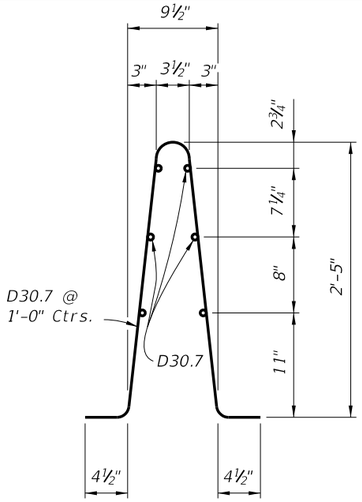

Welded Wire Reinforcement (WWR)
Piece No. 2

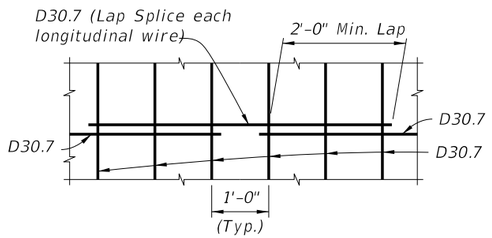

SPLICE DETAIL
(Between WWR Sections)

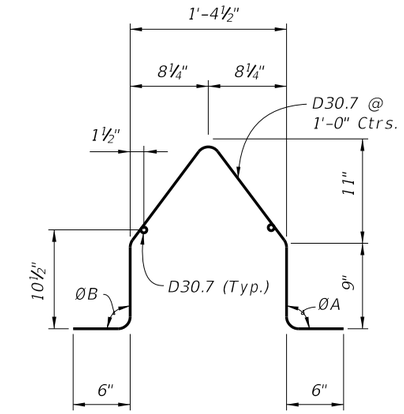

Welded Wire Reinforcement (WWR)
Piece No. 1

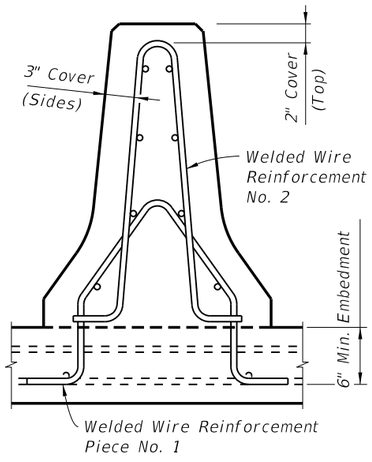

WELDED WIRE REINFORCEMENT NOTES:

1. At the option of the Contractor Welded Wire Reinforcement may be utilized in lieu of all Bars 5R, 5S and 5W. Welded Wire Reinforcement shall conform to ASTM A497.
2. Welded Wire Reinforcement at Railing End Transition shall be field bent inward as required (Pieces 1 & 2) to maintain cover. The top of Piece 1 shall be cut to allow overlap.
3. Place WWR panels so as to minimize the end overhang of longitudinal wires at Railing Ends and Open Joints. Overhangs greater than 6" are not permitted.

CONVENTIONAL REINFORCING STEEL BENDING DIAGRAMS

ROADWAY CROSS-SLOPE	ON SLOPE		AT CROWN	
	ØA	ØB	ØA	ØB
0% to 2%	90°	90°	90°	90°
2% to 6%	93°	87°	90°	90°
6% to 10%	96°	84°	90°	90°

ØA and ØB shall be 90° if Contractor elects to place railing perpendicular to the deck, and approach slabs.

BILL OF REINFORCING STEEL		
MARK	SIZE	LENGTH
R	5	6'-1"
S	5	As Reqd.
W	5	5'-3"

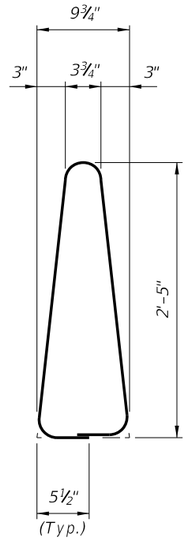

STIRRUP BAR 5R

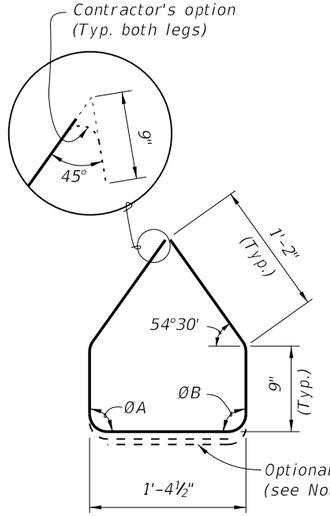

STIRRUP BAR 5W

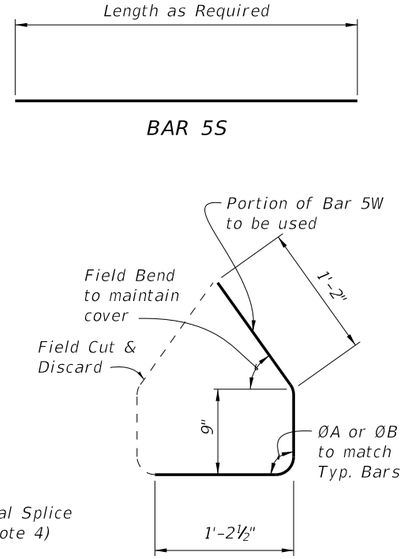

BAR 5S

TRANSITION STIRRUP BAR 5W
To Be Field Cut and Bent
(10 required per Railing
End Transition)

REINFORCING STEEL NOTES:

1. All bar dimensions in the bending diagrams are out to out.
2. All reinforcing steel at the open joints shall have a 2" minimum cover.
3. Bars 5S may be continuous or spliced at the construction joints. Bar splices for Bars 5S shall be a minimum of 2'-0".
4. At the Contractor's option, Bars 5W may be fabricated as a two piece bar with a 1'-2" lap splice of the bottom legs.

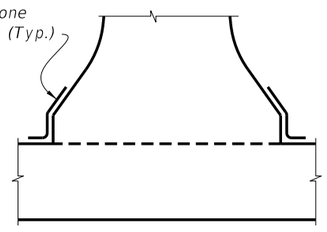

DETAIL "B" - SECTION
AT INTERMEDIATE OPEN JOINT

INTERMEDIATE JOINT SEAL NOTES:

1. At Intermediate Open Joints, seal the lower 6" portion of the open joint with Pre-cured Silicone Sealant in accordance with Specification Section 932.
2. Apply sealant prior to any Class V finish coating and remove all curing compound and loose material from the surface prior to application of bonding agent.
3. The cost of the Pre-cured Silicone Sealant shall be included in the Contract Unit Price for the Traffic Railing.

ESTIMATED TRAFFIC RAILING QUANTITIES		
ITEM	UNIT	QUANTITY
Concrete	CY/LF	0.120
Reinforcing Steel	LB/LF	23.29

(The above quantities are based on a crowned roadway, with a 2% cross slope)

LAST REVISION	REVISION	DESCRIPTION:	FDOT DESIGN STANDARDS 2013	TRAFFIC RAILING - (MEDIAN 32" F SHAPE)	INDEX NO.	SHEET NO.
01/01/11					421	4

C:\d\projects\standards\structures\2013book\00421-4of4.dgn
rd960rh
2:01:39 PM
6/28/2012

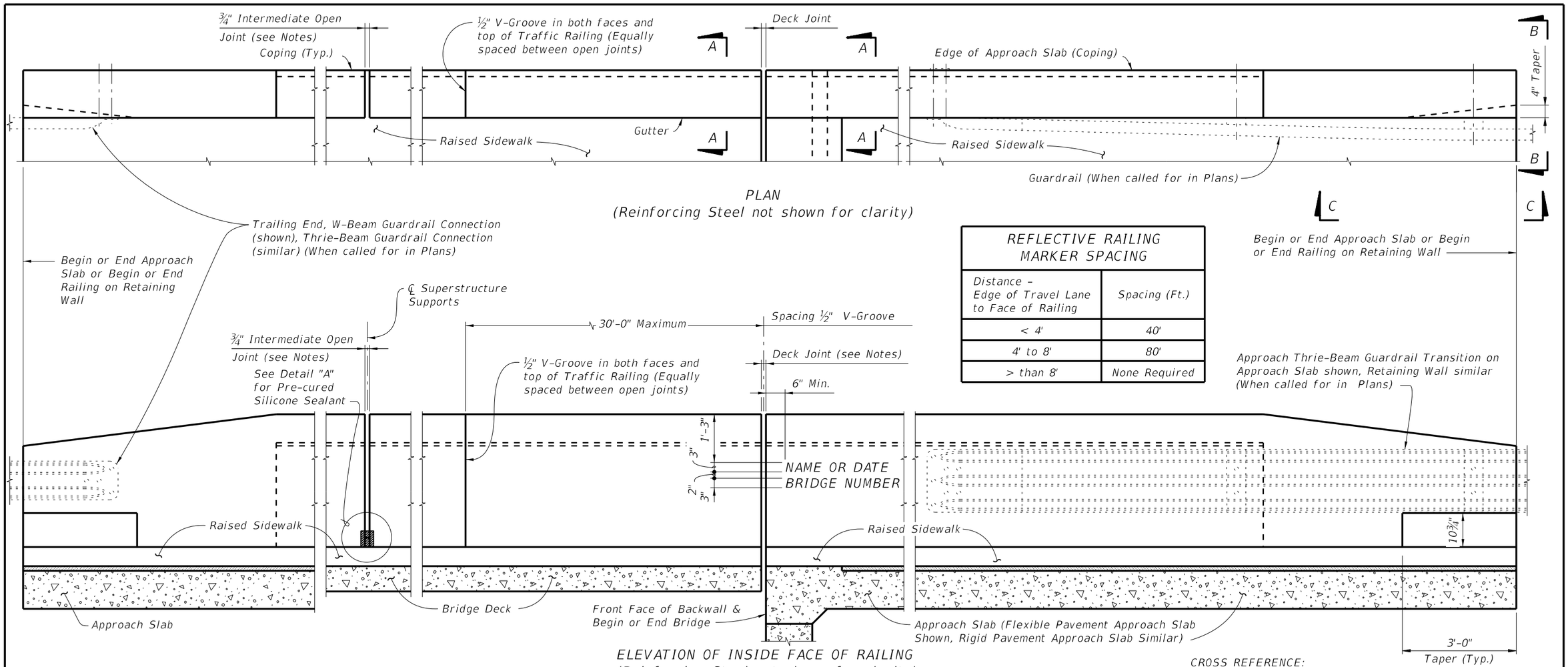

PLAN
(Reinforcing Steel not shown for clarity)

REFLECTIVE RAILING MARKER SPACING	
Distance – Edge of Travel Lane to Face of Railing	Spacing (Ft.)
< 4'	40'
4' to 8'	80'
> than 8'	None Required

ELEVATION OF INSIDE FACE OF RAILING
(Reinforcing Steel not shown for clarity)

CROSS REFERENCE:
For Section A-A, View B-B and View C-C, see Sheet 2.
For Detail "A" see Sheet 3.

TRAFFIC RAILING NOTES

This railing has been structurally evaluated to be equivalent or greater in strength to other safety shape railings which have been crash tested to NCHRP Report 350 TL-4 Criteria.

CONCRETE AND REINFORCING STEEL : See Structures Plans, General Notes.

MARKERS : Elevation Markers shall be placed on top of the Traffic Railing at the end bents. On bridges longer than 100 Ft. one marker shall be placed at each end of the bridge. On bridges 100 Ft. or less one marker shall be placed at one end of the bridge only. Markers are to be furnished by the Florida Department of Transportation and installed by the Contractor. The cost of installing the markers shall be included in the Contract Unit Price for the Traffic Railing. The Department will determine the vertical Datum information for the marker.

GUARDRAIL : For Guardrail connection details, see Index No. 400.

RAILINGS ON RETAINING WALLS : If the Traffic Railing is to be provided on a retaining wall, the railing section will be the same as shown on Index No. 422, Sheet 2. All other details such as the guardrail transition attachment, the maximum spacing of the ¾" open joints and ½" V-Groove shall apply.

REFLECTIVE RAILING MARKERS : Reflective Railing Markers shall meet Specification Section 993. Install markers on top of the Traffic Railing 2" from the face on the traffic side at the spacing shown in the table above. Reflector color (white or yellow) shall match the color of the near edgeline. The cost of the reflective markers shall be included in the Contract Unit Price for the Traffic Railing.

V-GROOVES : Construct ½" V-Grooves plumb and provide at 30'-0" maximum intervals as shown. Space V-Grooves equally between ¾" Open Joints and/or Deck Joints and at V-Groove locations on Retaining Wall footings.

NAME, DATE, AND BRIDGE NUMBER : The Name and Bridge Number shall be placed on the Traffic Railing so as to be seen on the driver's right side when approaching the bridge. The Date shall be placed on the driver's left side when approaching the bridge. The Name shall be as shown in the General Notes in the Structures Plans. The Date shall be the year the bridge is completed. For a widening when the existing railing is removed, use both the existing date and the year of the widening. Black plastic letters and figures 3" in height may be used, as approved by the Engineer, in lieu of the letters and figures formed by ⅜" V-Grooves. V-Grooves shall be formed by preformed letters and figures.

JOINTS : See Plans, Superstructure, Approach Slab and Retaining Walls Sheets for actual dimensions and joint orientation. Provide open Railing Joints at Deck Expansion Joint locations matching the dimensions of the Deck Joint. For treatment of Railings on skewed bridges see Index No. 420.

Provide ¾" Intermediate Open Joints at :
(1) – Superstructure supports where slab is continuous.
(2) – Ends of approach slabs when adjacent to retaining walls and at expansion joints on retaining wall junction slabs.

LAST REVISION	REVISION	DESCRIPTION:				
01/01/12			FDOT DESIGN STANDARDS 2013	TRAFFIC RAILING - (42" VERTICAL SHAPE)	INDEX NO. 422	SHEET NO. 1

C:\d\projects\standards\structures\2013book\00422-1of3.dgn
rd960rh
2:01:42 PM
6/28/2012

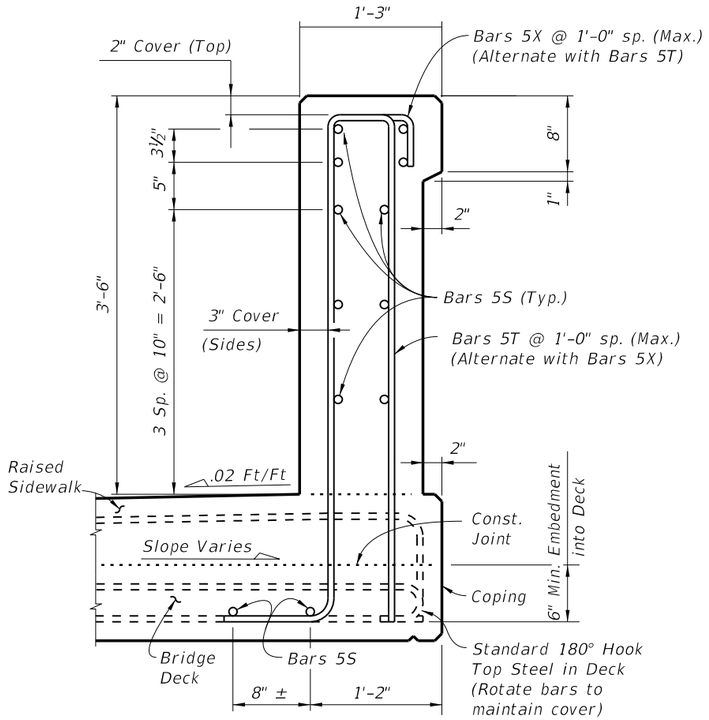

SECTION A-A
TYPICAL SECTION THRU TRAFFIC RAILING
SECTION THRU BRIDGE DECK SHOWN

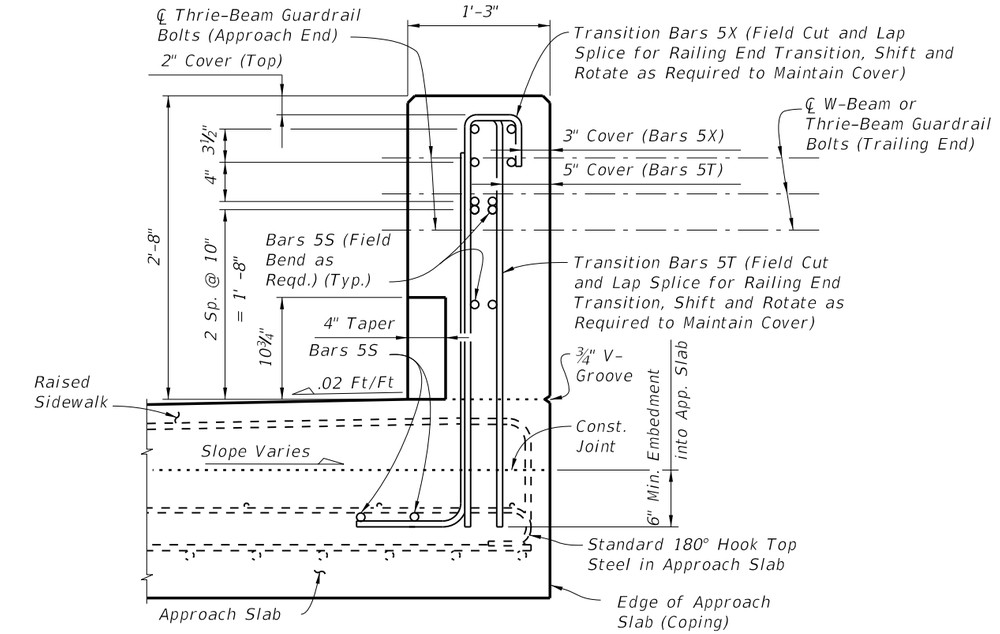

VIEW B-B
(End View of Traffic Railing, Approach Slab shown,
Retaining Wall Junction Slab similar)

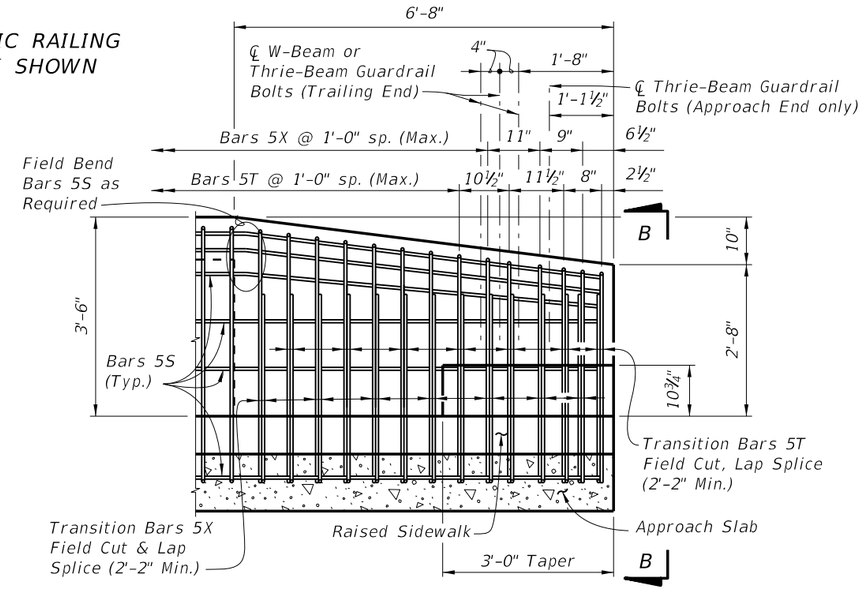

VIEW C-C
RAILING END TRANSITION
(Guardrail Not Shown For Clarity)

NOTES:

Begin placing Railing Bars 5T and 5X on Approach Slab at the railing end and proceed toward Begin or End Bridge to ensure placement of guardrail bolt holes. If required, adjustments to the bar spacing for Bars 5T and 5X shall be made immediately adjacent to Begin or End Bridge. Shift and rotate Bars 5T and 5X as required to maintain cover in Railing End Transition.

Omit Railing Taper, End Transition and Guardrail if Concrete Barrier Wall is used beyond the Approach Slab or Retaining Wall. See Structures Plans, Plan and Elevation Sheet and Roadway Plans. If Taper and Railing End Transition is omitted, extend Typical Section to end of the Approach Slab or limiting station on Retaining Wall, and space Bars 5T and 5X at 1'-0" (Typ.)

CROSS REFERENCE:
For location of Section A-A, View B-B and View C-C, see Sheet 1.

C:\d\projects\standards\structures\2013book\00422-2of3.dgn
rd960rh
2:01:45 PM
6/28/2012

LAST REVISION	REVISION	DESCRIPTION:				
01/01/12			FDOT DESIGN STANDARDS 2013	TRAFFIC RAILING - (42" VERTICAL SHAPE)	INDEX NO. 422	SHEET NO. 2

CONVENTIONAL REINFORCING STEEL BENDING DIAGRAMS

BILL OF REINFORCING STEEL		
MARK	SIZE	LENGTH
S	5	As Reqd.
T	5	10'-8"
X	5	6'-9"

ROADWAY CROSS-SLOPE	ØA	
	LOW GUTTER	HIGH GUTTER
0% to 2%	90°	90°
2% to 6%	87°	83°
6% to 10%	84°	96°

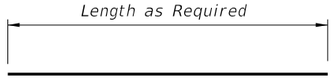

BAR 5S

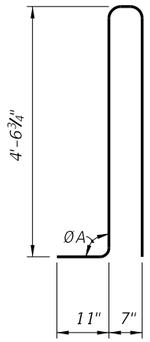

STIRRUP BAR 5T

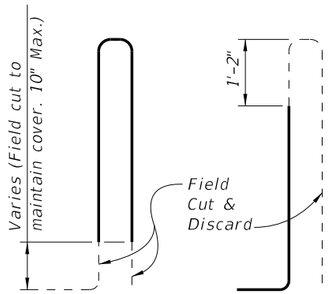

TRANSITION STIRRUP BARS 5T

To Be Field Cut (7 of each required per Railing End Transition)

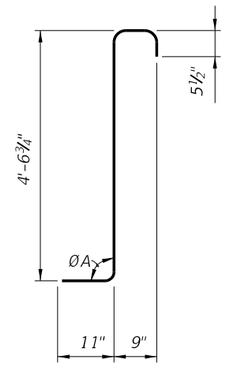

STIRRUP BAR 5X

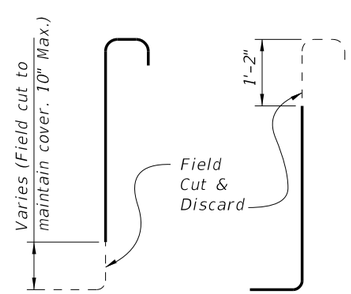

TRANSITION STIRRUP BARS 5X

To Be Field Cut (7 of each required per Railing End Transition)

REINFORCING STEEL NOTES:

1. All bar dimensions in the bending diagrams are out to out.
2. The 4'-6¾" vertical dimension shown for Bars 5T and 5X is based on a bridge deck with a 6" thick x 6' wide raised sidewalk at low side of deck, 2% deck cross slope and a counter 2% raised sidewalk cross slope. If the raised sidewalk thickness, width or cross slope vary from the above amounts, adjust this dimension accordingly to achieve a 6" minimum embedment into the bridge deck. See Structures Plans, Superstructure and Approach Slab Sheets.
3. The reinforcement for the railing on a retaining wall shall be the same as detailed above with ØA = 90°.
4. All reinforcing steel at the open joints shall have a 2" minimum cover.
5. Bars 5S may be continuous or spliced at the construction joints. Bar splices for Bars 5S shall be a minimum of 2'-2".
6. The Contractor may utilize Welded Wire Reinforcement when approved by the Engineer. Welded Wire Reinforcement shall conform to ASTM A497.

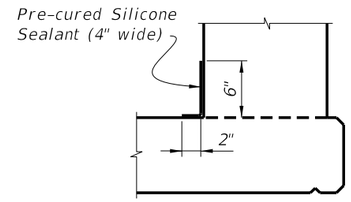

DETAIL "A" - SECTION
AT INTERMEDIATE OPEN JOINT

INTERMEDIATE JOINT SEAL NOTES:

1. At Intermediate Open Joints, seal the lower 6" portion of the open joint with Pre-cured Silicone Sealant in accordance with Specification Section 932.
2. Apply sealant prior to any Class V finish coating and remove all curing compound and loose material from the surface prior to application of bonding agent.
3. The cost of the Pre-cured Silicone Sealant shall be included in the Contract Unit Price for the Traffic Railing.

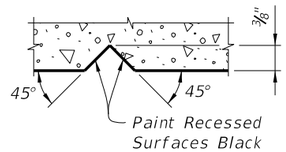

SECTION THRU RECESSED "V" GROOVE
TO FORM INSCRIBED LETTERS AND FIGURES

ESTIMATED TRAFFIC RAILING QUANTITIES		
ITEM	UNIT	QUANTITY
Concrete	CY/LF	0.145
Reinforcing Steel	LB/LF	30.68

(The above quantities are based on a 6" thick x 6' wide raised sidewalk at low side of deck, 2% deck cross slope and counter 2% sidewalk cross slope)

C:\d\projects\standards\structures\2013book\00422-3of3.dgn
rd960rh
2:01:47 PM
6/28/2012

LAST REVISION	REVISION	DESCRIPTION:			INDEX NO.	SHEET NO.
01/01/11			FDOT DESIGN STANDARDS 2013	TRAFFIC RAILING - (42" VERTICAL SHAPE)	422	3

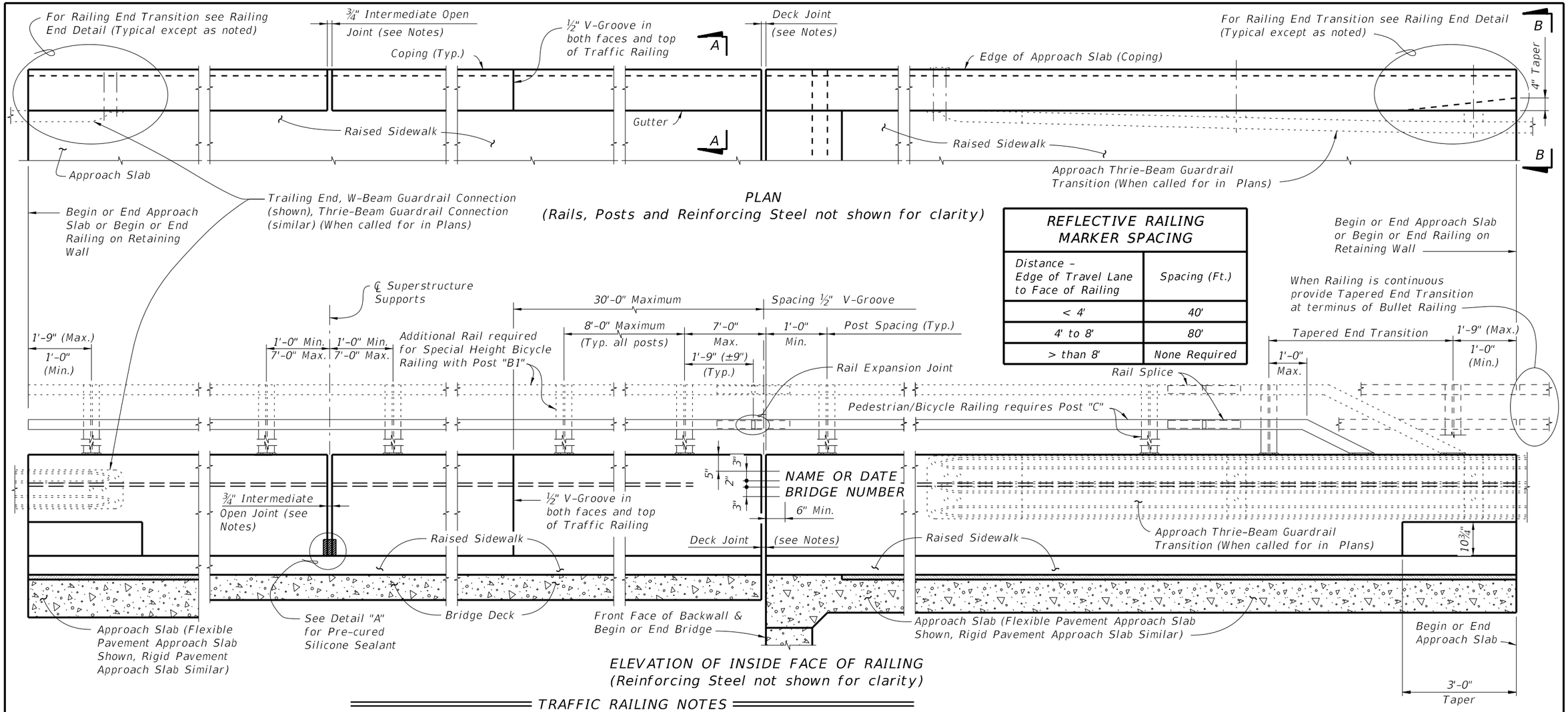

ELEVATION OF INSIDE FACE OF RAILING
(Reinforcing Steel not shown for clarity)

REFLECTIVE RAILING MARKER SPACING	
Distance – Edge of Travel Lane to Face of Railing	Spacing (Ft.)
< 4'	40'
4' to 8'	80'
> than 8'	None Required

TRAFFIC RAILING NOTES

This railing has been structurally evaluated to be equivalent or greater in strength to other safety shape railings which have been crash tested to NCHRP Report 350 TL-4 Criteria.

CONCRETE AND REINFORCING STEEL : See Structures Plans, General Notes.

MARKERS : Elevation Markers shall be placed on top of the Traffic Railing at the end bents. On bridges longer than 100 Ft. one marker shall be placed at each end of the bridge. On bridges 100 Ft. or less one marker shall be placed at one end of the bridge only. Markers are to be furnished by the Florida Department of Transportation and installed by the Contractor. The cost of installing the markers shall be included in the Contract Unit Price for the Traffic Railing. The Department will determine the vertical Datum information for the marker.

GUARDRAIL : For Guardrail connection details, see Index No. 400.

PEDESTRIAN/BICYCLE RAILING AND SPECIAL HEIGHT BICYCLE RAILING DETAILS : See Index No. 822 for Post, Rail and Rail Expansion Joint fabrication and installation Details and Notes.

V-GROOVES : Construct ½" V-Grooves plumb. Space V-Grooves equally between ¾" Open Joints and/or Deck Joints and at V-Groove locations on Retaining Wall footings.

REFLECTIVE RAILING MARKERS : Reflective Railing Markers shall meet Specification Section 993. Install markers on top of the Traffic Railing 2" from the face on the traffic side at the spacing shown in the table above. Reflector color (white or yellow) shall match the color of the near edgeline. The cost of the reflective markers shall be included in the Contract Unit Price for the Traffic Railing.

RAILINGS ON RETAINING WALLS : If the Traffic Railing is to be provided on a retaining wall, the railing section will be the same as shown on Sheet 2. All other details such as the guardrail transition attachment, the maximum spacing of the ¾" open joints and ½" V-Groove shall apply.

NAME, DATE, AND BRIDGE NUMBER : The Name and Bridge Number shall be placed on the Traffic Railing so as to be seen on the driver's right side when approaching the bridge. The Date shall be placed on the driver's left side when approaching the bridge. The Name shall be as shown in the General Notes of the Structures Plans. The Date shall be the year the bridge is completed. For a widening when the existing railing is removed, use both the existing date and the year of the widening. Black plastic letters and figures 3" in height may be used, as approved by the Engineer, in lieu of the letters and figures formed by ⅜" V-Grooves. V-Grooves shall be formed by preformed letters and figures.

OPEN JOINTS : See Structures Plans, Superstructure, Approach Slab Sheets and Retaining Walls for actual dimensions and joint orientation. Provide open Railing Joints at Deck Expansion Joint locations matching the dimensions of the Deck Joint. For treatment of Railings on skewed bridges see Index No. 420.

Provide ¾" Intermediate Open Joints at :

(1) – Superstructure supports where slab is continuous.

(2) – Ends of approach slabs when adjacent to retaining walls and at expansion joints on retaining wall junction slabs.

CROSS REFERENCE:
For Section A-A and View B-B, see Sheet 2.
For Detail "A" see Sheet 3.

C:\d\projects\standards\structures\2013book\00423-1of3.dgn rd960rh 2:01:50 PM 6/28/2012

LAST REVISION	REVISION	DESCRIPTION:			INDEX NO.	SHEET NO.
01/01/12			FDOT DESIGN STANDARDS 2013	TRAFFIC RAILING - (32" VERTICAL SHAPE)	423	1

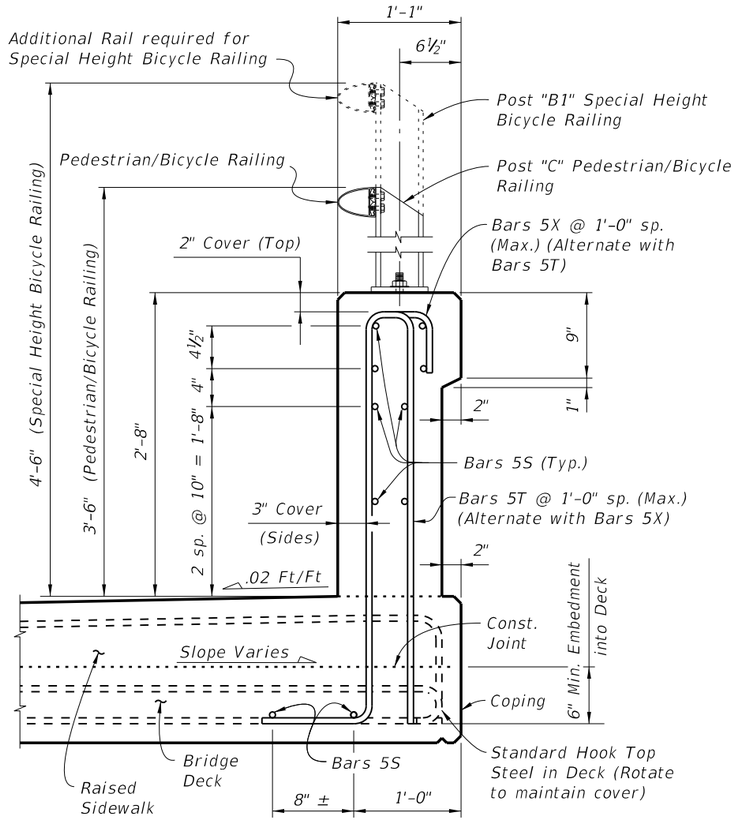

SECTION A-A
TYPICAL SECTION THRU TRAFFIC RAILING
SECTION THRU BRIDGE DECK SHOWN

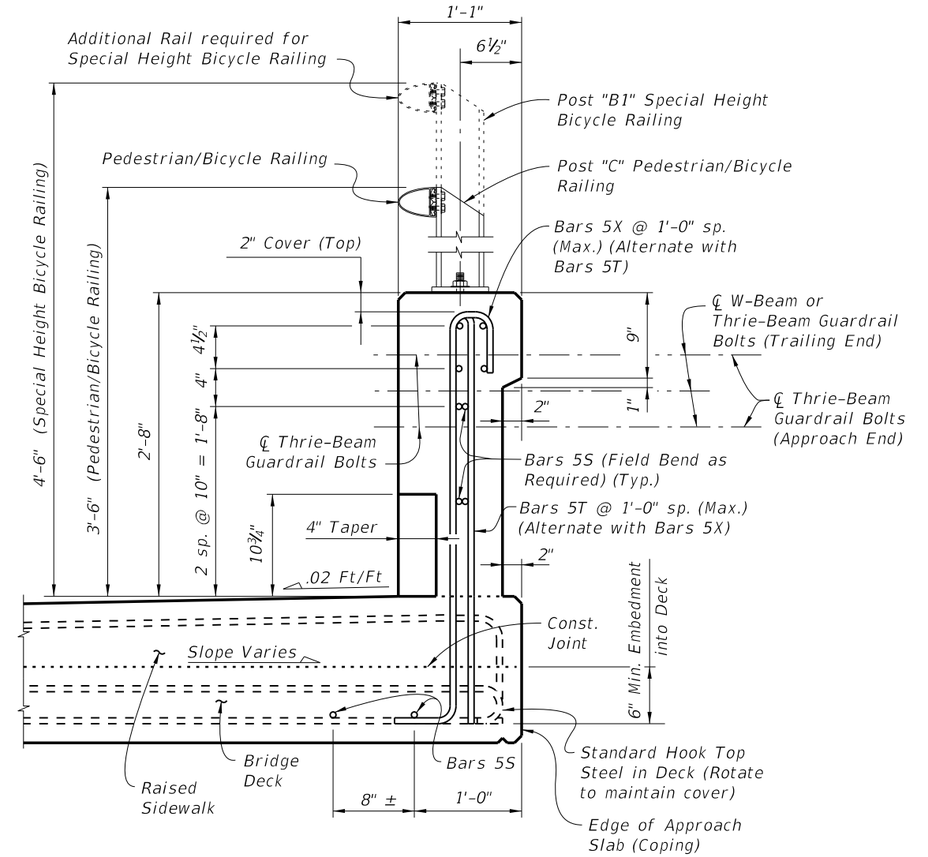

VIEW B-B
APPROACH SLAB END VIEW
OF TRAFFIC RAILING

CROSS REFERENCE:
For location of Section A-A and View B-B see Sheet 1.

NOTE: For Post "B1", Post "C" and Rail Details, see Index No. 822.

NOTES:
Omit Railing End Taper and Guardrail if Concrete Barrier Wall is used beyond the Approach Slab. See Structures Plans, Plan and Elevation Sheet and Roadway Plans. If Railing End Taper is omitted, extend Typical Section to the end of the Approach Slab. Begin placing Railing Bars 5T and 5X on Approach Slab at the railing end and proceed toward Begin or End Bridge to ensure placement of guardrail bolt holes. If required, adjustments to the bar spacing for Bars 5T and 5X shall be made immediately adjacent to Begin or End Bridge. Shift and rotate Bars 5T and 5X on Approach Slab in end taper section as required to maintain cover.

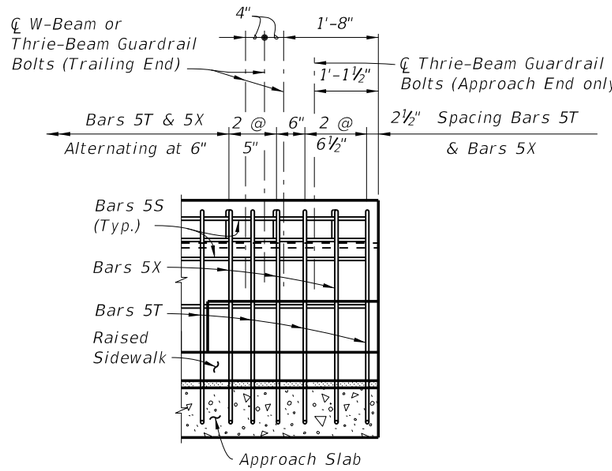

RAILING END DETAIL

LAST REVISION	REVISION	DESCRIPTION:				
01/01/11			FDOT DESIGN STANDARDS 2013	TRAFFIC RAILING - (32" VERTICAL SHAPE)	INDEX NO. 423	SHEET NO. 2

6/28/2012 2:01:55 PM rd960rh C:\d\projects\standards\structures\2013book\00423-2of3.dgn

CONVENTIONAL REINFORCING STEEL BENDING DIAGRAMS

BILL OF REINFORCING STEEL		
MARK	SIZE	LENGTH
S	5	As Reqd.
T	5	9'-0"
X	5	5'-10"

ROADWAY CROSS-SLOPE	ØA	
	LOW GUTTER	HIGH GUTTER
0% to 2%	90°	90°
2% to 6%	87°	93°
6% to 10%	84°	96°

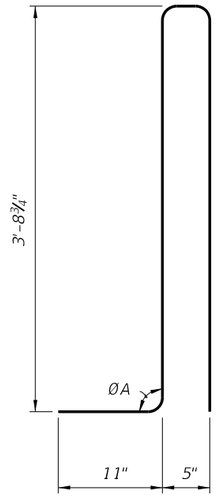

STIRRUP BAR 5T

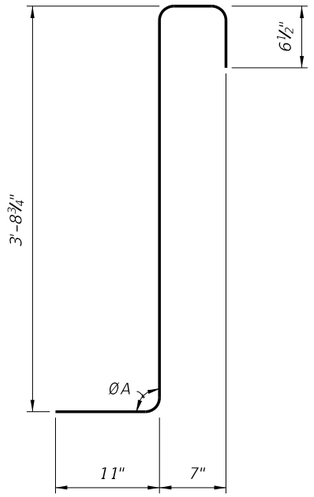

STIRRUP BAR 5X

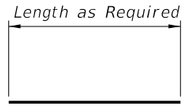

BAR 5S

REINFORCING STEEL NOTES:

1. All bar dimensions in the bending diagrams are out to out.
2. The 3'-8¾" vertical dimensions shown for Bars 5T and 5X are based on a bridge deck with a 6" thick x 6' wide raised sidewalk at low side of deck, 2% deck cross slope and a counter 2% raised sidewalk cross slope. If the raised sidewalk thickness, width or cross slopes vary from the above amounts, adjust these vertical dimensions accordingly to achieve a 6" minimum embedment into the bridge deck.
3. The reinforcement for the railing on a Retaining Wall shall be the same as detailed with ØA = 90°.
4. All reinforcing steel at the open joints shall have a 2" minimum cover.
5. Bars 5S may be continuous or spliced at the construction joints. Bar splices for Bars 5S shall be a minimum of 2'-2".
6. The Contractor may utilize Welded Wire Reinforcement when approved by the Engineer. Welded Wire Reinforcement shall conform to ASTM A497.

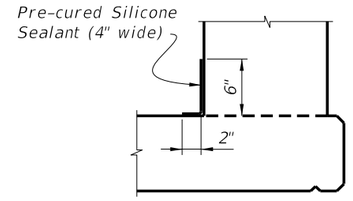

DETAIL "A" - SECTION
AT INTERMEDIATE OPEN JOINT

INTERMEDIATE JOINT SEAL NOTES:

1. At Intermediate Open Joints, seal the lower 6" portion of the open joint with Pre-cured Silicone Sealant in accordance with Specification Section 932.
2. Apply sealant prior to any Class V finish coating and remove all curing compound and loose material from the surface prior to application of bonding agent.
3. The cost of the Pre-cured Silicone Sealant shall be included in the Contract Unit Price for the Traffic Railing.

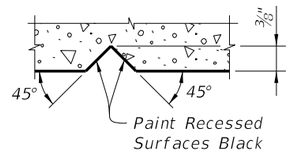

SECTION THRU RECESSED "V" GROOVE
TO FORM INSCRIBED LETTERS AND FIGURES

ESTIMATED TRAFFIC RAILING QUANTITIES		
ITEM	UNIT	QUANTITY
Concrete	CY/LF	0.095
Reinforcing Steel	LB/LF	25.90

(The above quantities are based on a 6" thick x 6' wide raised sidewalk at low side of deck, 2% deck cross slope and counter 2% sidewalk cross slope.)

C:\d\projects\standards\structures\2013book\00423-3of3.dgn
rd960rh
2:01:57 PM
6/28/2012

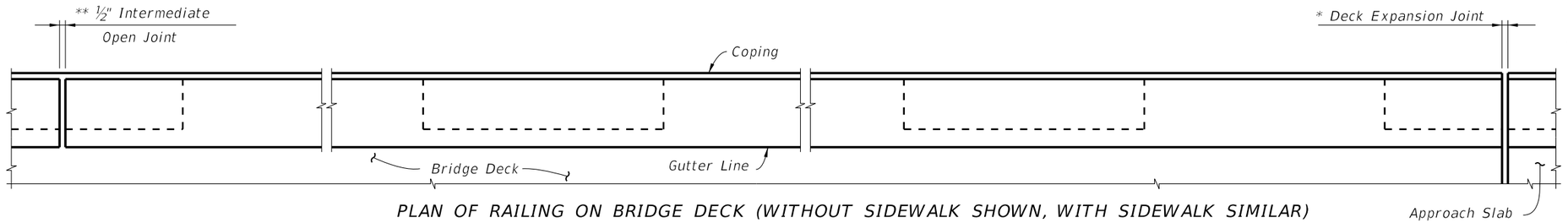

* See Structures Plans Superstructure and Approach Slab Sheets for actual dimensions and joint orientation. Provide open Railing Joints at Deck Expansion Joint locations matching the dimension of the Deck Joint. See Sheets 6 and 7 for details at Skewed Deck Joints.

PLAN OF RAILING ON BRIDGE DECK (WITHOUT SIDEWALK SHOWN, WITH SIDEWALK SIMILAR)
(APPROACH SLAB WITHOUT GUARDRAIL WITH OR WITHOUT SIDEWALK SIMILAR)
(Reinforcing Steel Not Shown For Clarity)

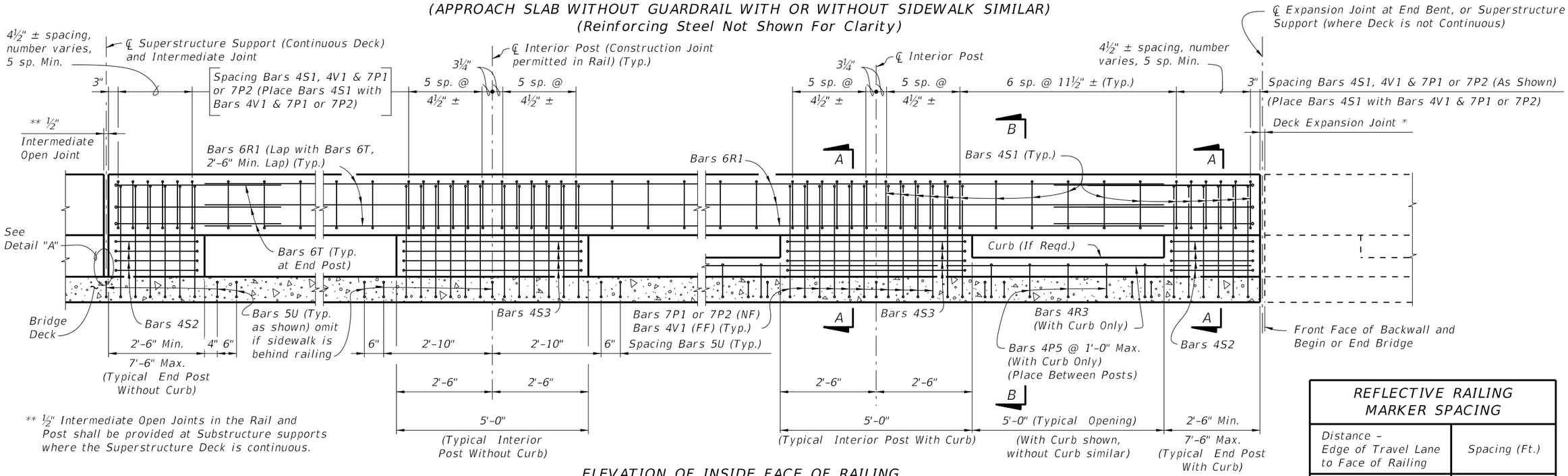

** ½" Intermediate Open Joints in the Rail and Post shall be provided at Substructure supports where the Superstructure Deck is continuous.

NOTE:
End Post dimensions for a given span shall match.

ELEVATION OF INSIDE FACE OF RAILING
(BRIDGE DECK SHOWN,
APPROACH SLAB WITHOUT GUARDRAIL OR ADJACENT TO ROADWAY BARRIER SIMILAR)

REFLECTIVE RAILING MARKER SPACING	
Distance – Edge of Travel Lane to Face of Railing	Spacing (Ft.)
< 4'	40'
4' to 8'	80'
> than 8'	None Required

TRAFFIC RAILING NOTES

This railing has been structurally evaluated to be equivalent or greater in strength to other railings which have been crash tested to NCHRP Report 350 TL-4 Criteria.

CONCRETE AND REINFORCING STEEL : See Structures Plans General Notes.
AGGREGATE LIMITATION: The aggregate used in the concrete mix shall be a #67 aggregate.
MARKERS : Elevation markers shall be placed on top of the Traffic Railing at the end bents. On bridges longer than 100 Ft. one marker shall be placed at each end of the bridge. On bridges 100 Ft. or less one marker shall be placed at one end of the bridge only. Markers are to be furnished by the Florida Department of Transportation and installed by the Contractor. The cost of installing the markers shall be included in the Contract Unit Price for the Traffic Railing. The Department will determine the vertical Datum information for the marker.
GUARDRAIL : For Guardrail connection details see Index No. 400.
SUPERELEVATED BRIDGES : At the option of the Contractor the Traffic Railing on superelevated bridges may be constructed perpendicular to the roadway surface. The cost of all modifications will be at the Contractor's expense.

RETAINING WALL : If the Traffic Railing Barrier is to be provided on a retaining wall, the railing sections will be the same as on Sheets 3 and 4. See Retaining Wall Plans for payment.
NAME, DATE AND BRIDGE NUMBER : The Name and Bridge Number shall be placed on the Traffic Railing so as to be seen on the driver's right side when approaching the bridge. The Name shall be as shown in the General Notes in the Structures Plans. The Date shall be placed on the driver's left side when approaching the bridge. The Date shall be the year the bridge is completed. For a widening when the existing railing is removed, use both the existing date and the year of the widening. Black plastic letters and figures 3" in height may be used, as approved by the Engineer, in lieu of the letters and figures formed by ⅜" V-Grooves. V-Grooves shall be formed by preformed letters and figures.
REFLECTIVE RAILING MARKERS : Reflective Railing Markers shall meet Specification Section 993. Install markers on top of the Traffic Railing 2" from the face on the traffic side at the spacing shown in the table above. Reflector color (white or yellow) shall match the color of the near edgeline. The cost of the reflective markers shall be included in the Contract Unit Price for the Traffic Railing.

NOTES:
(NF) means Near Face, (FF) means Far Face.

CROSS REFERENCES:
For Sections see Sheets 3 and 4.
For Detail "A" see Sheet 3.
For Quantities and Quantity Breakdown see Sheet 5.

C:\d\projects\standards\structures\2013book\00424-1of7.dgn rd960rh 2:01:59 PM 6/28/2012

LAST REVISION	REVISION	DESCRIPTION:		FDOT DESIGN STANDARDS 2013	TRAFFIC RAILING - (CORRAL SHAPE)	INDEX NO.	SHEET NO.
01/01/11						424	1

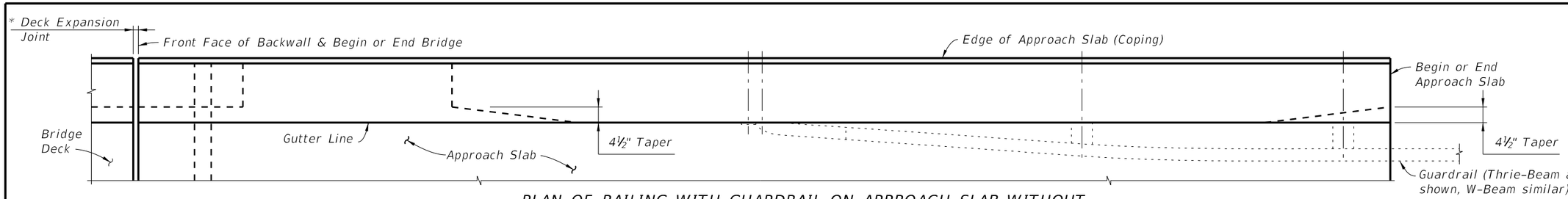

* See Structures Plans, Superstructure and Approach Slab Sheets for actual dimensions and joint orientation. Open railing Joints at Deck Expansion Joint locations shall match the dimension of the Deck Joint. For treatment of Barriers on skewed bridges see Sheets 6 and 7.

PLAN OF RAILING WITH GUARDRAIL ON APPROACH SLAB WITHOUT SIDEWALK (APPROACH SLAB WITH ADJACENT SIDEWALK SIMILAR) (Reinforcing Steel Not Shown For Clarity)

** Begin placing Railing Bars 7P1 or 7P2 and 4V on Approach Slab at the barrier end and proceed toward Begin or End Bridge to ensure placement of guardrail bolt holes If required, adjustments to the bar spacing for Bars 7P1 or 7P2 and 4V shall be made immediately adjacent to Begin or End Bridge.

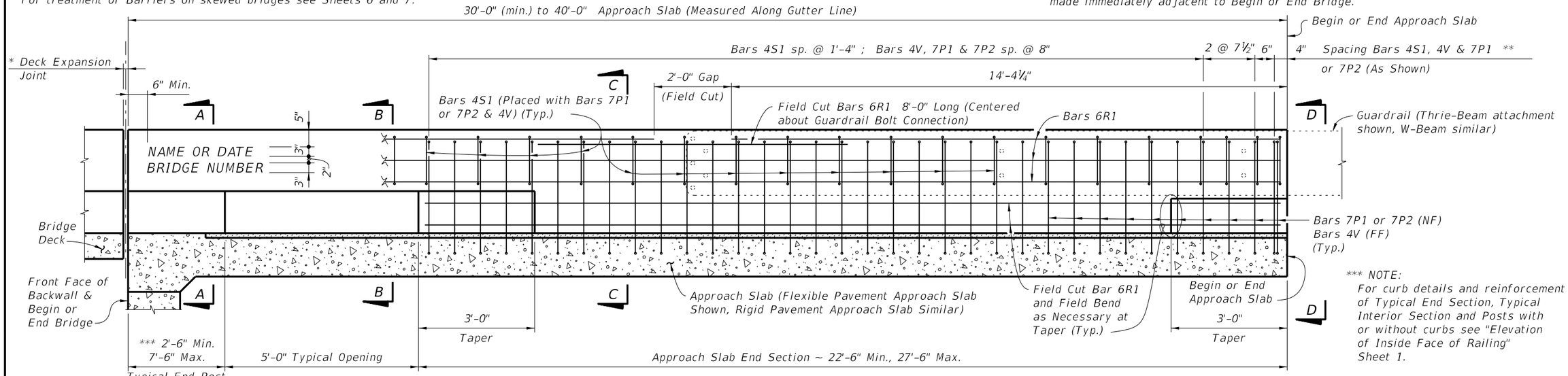

*** NOTE:
For curb details and reinforcement of Typical End Section, Typical Interior Section and Posts with or without curbs see "Elevation of Inside Face of Railing" Sheet 1.

ELEVATION OF INSIDE FACE OF RAILING WITH GUARDRAIL ON APPROACH SLABS 40'-0" OR LESS ALONG GUTTER (WITHOUT CURB SHOWN, WITH CURB SIMILAR)

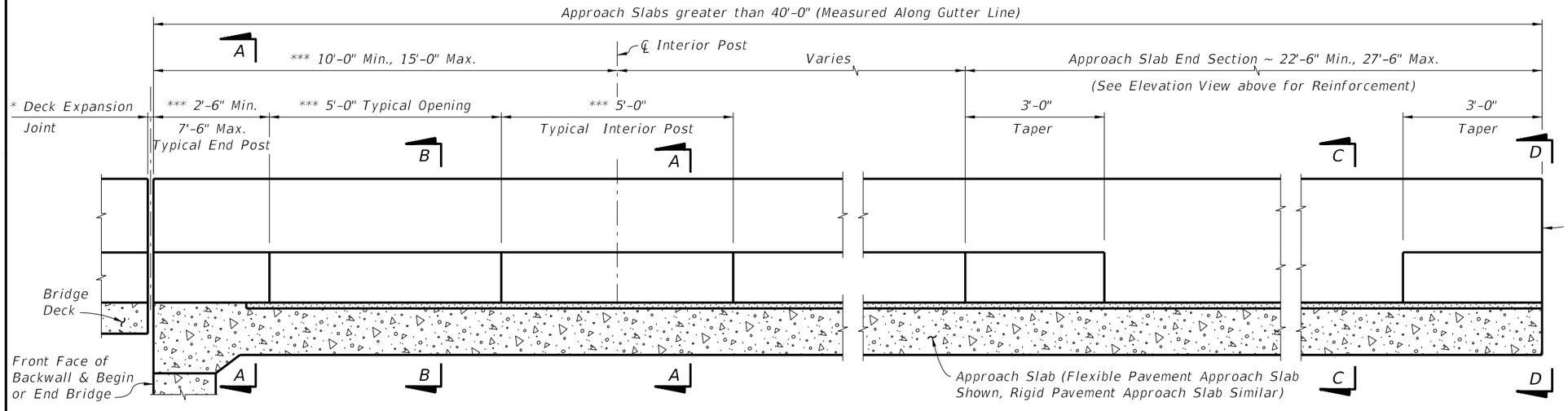

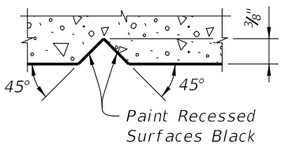

SECTION THRU RECESSED V-GROOVE TO FORM INSCRIBED LETTERS AND FIGURES

NOTES:
(NF) means Near Face.
(FF) means Far Face.

CROSS REFERENCES:
For Sections see Sheets 3 and 4.
For Quantities and Quantity Breakdown see Sheet 5.

ELEVATION OF INSIDE FACE OF RAILING WITH GUARDRAIL ON APPROACH SLABS GREATER THAN 40'-0" ALONG GUTTER (WITHOUT CURB SHOWN, WITH CURB SIMILAR)

C:\d\projects\standards\structures\2013book\00424-2of7.dgn
rd960rh
2:02:02 PM
6/28/2012

LAST REVISION	REVISION	DESCRIPTION:				
01/01/11			FDOT DESIGN STANDARDS 2013	TRAFFIC RAILING - (CORRAL SHAPE)	INDEX NO. 424	SHEET NO. 2

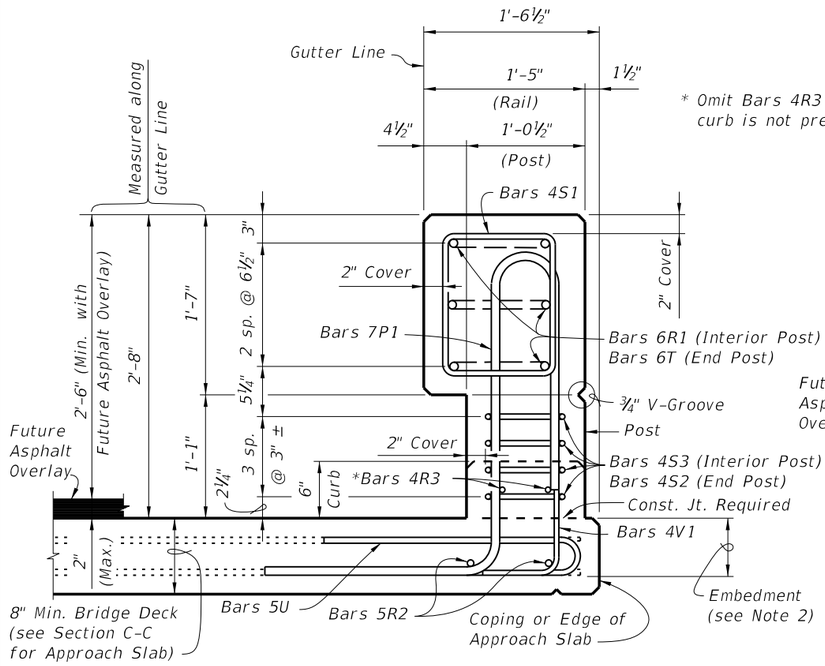

* Omit Bars 4R3 when curb is not present.

SECTION A-A (WITH CURB SHOWN, WITHOUT CURB SIMILAR)

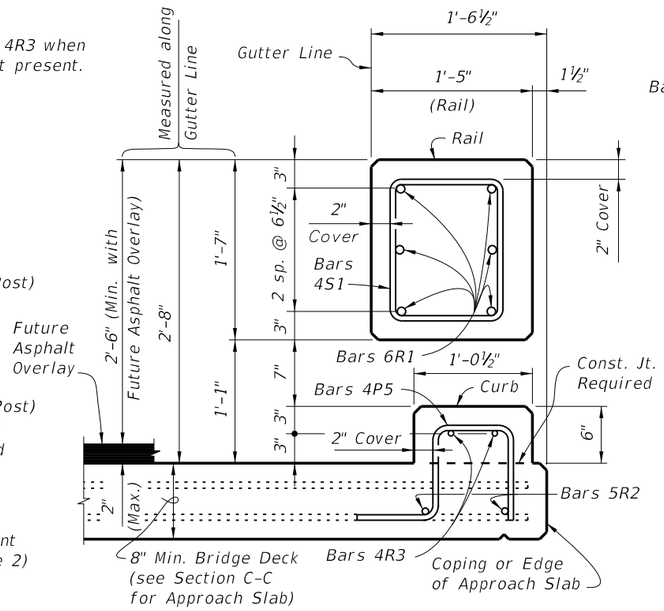

SECTION B-B (WITH CURB SHOWN, WITHOUT CURB SIMILAR)

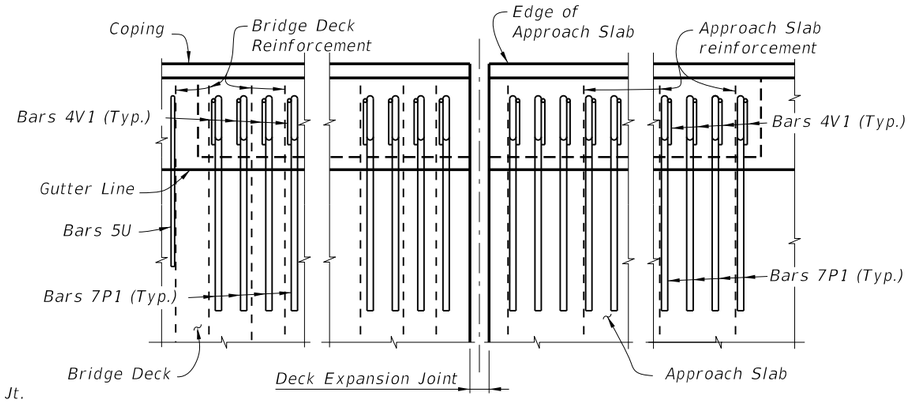

PARTIAL PLAN VIEW OF BRIDGE DECK AND APPROACH SLAB
(END POST SHOWN, INTERIOR POST SIMILAR)
(Bars R, S and T not shown for clarity)

NOTES:
1) Shift deck and approach slab transverse reinforcement minimally to allow placement of Bars 7P & 4V.
2) For decks to 8½" place Bars 7P1 & 4V with the bottom mat of reinforcement as shown in Section A-A. For decks and slabs thicker than 8½" place Bars 7P1 and 4V with 6" embedment. At skewed joints, place Bars 7P3 and 4V with 5" embedment.

TYPICAL SECTIONS THRU RAILING (BRIDGE DECK SHOWN, APPROACH SLAB SIMILAR)

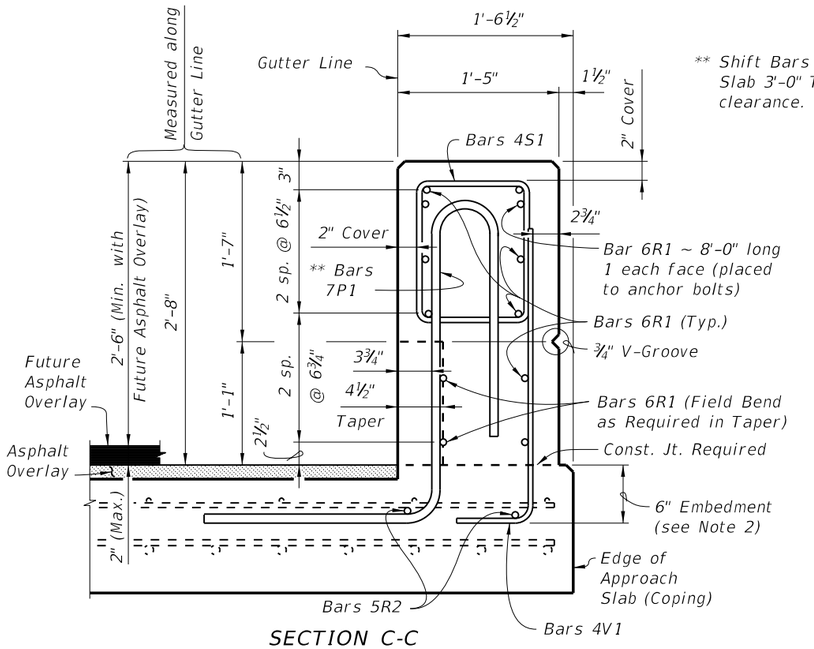

** Shift Bars 7P1 in Approach Slab 3'-0" Tapers to maintain clearance.

SECTION C-C

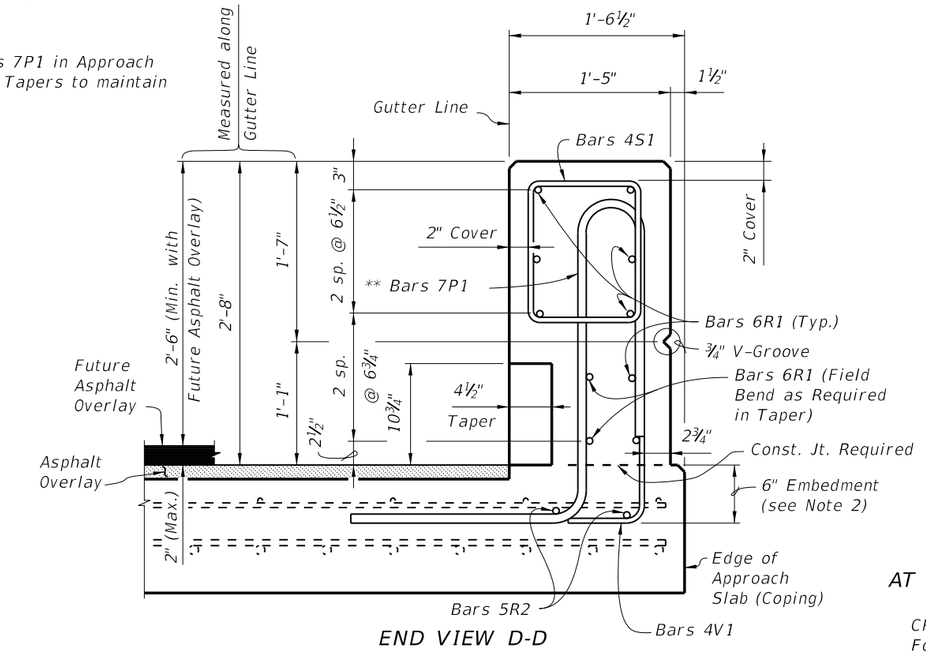

END VIEW D-D

TYPICAL SECTIONS THRU RAILING END SECTIONS ON APPROACH SLAB WITH GUARDRAIL
(APPROACH SLAB (FLEXIBLE PAVEMENT APPROACHES) SHOWN, APPROACH SLAB (RIGID PAVEMENT APPROACHES) SIMILAR)

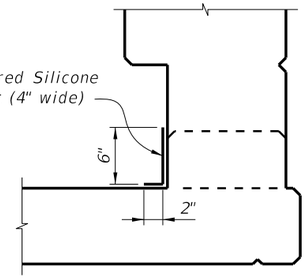

INTERMEDIATE JOINT SEAL NOTES:
1. At Intermediate Open Joints in Curb Sections, seal the lower 6" portion of the open joint with Pre-cured Silicone Sealant in accordance with Specification Section 932.
2. Apply sealant prior to any Class V finish coating and remove all curing compound and loose material from the surface prior to application of bonding agent.
3. The cost of the Pre-cured Silicone Sealant shall be included in the Contract Unit Price for the Traffic Railing.

DETAIL "A" - SECTION
AT INTERMEDIATE OPEN JOINT WITH CURB

CROSS REFERENCES:
For Locations of Sections and Detail "A", see Sheets 1 and 2.
For Quantities and Rebar Details see Sheet 5.

C:\d\projects\standards\structures\2013book\00424-3of7.dgn rd960rh 2:02:04 PM 6/28/2012

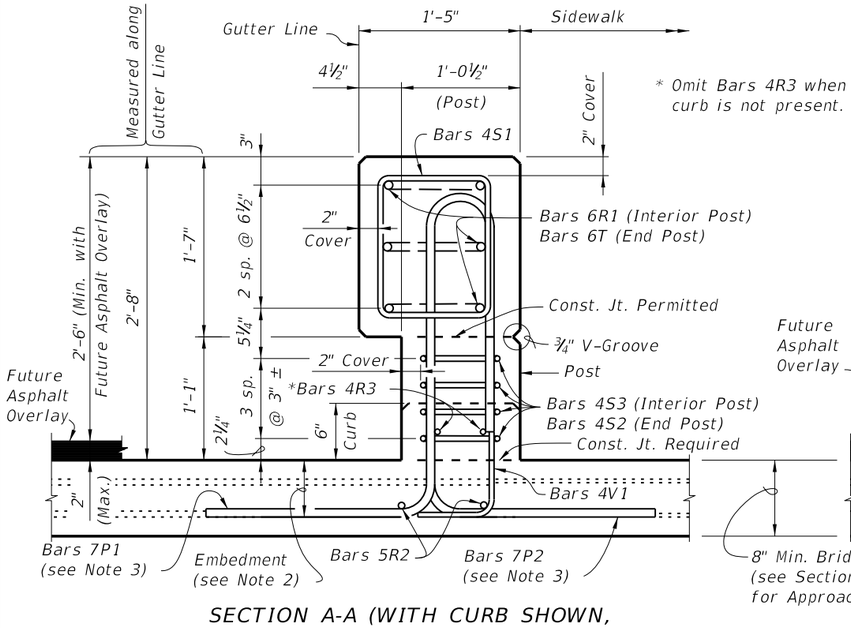

SECTION A-A (WITH CURB SHOWN, WITHOUT CURB SIMILAR)

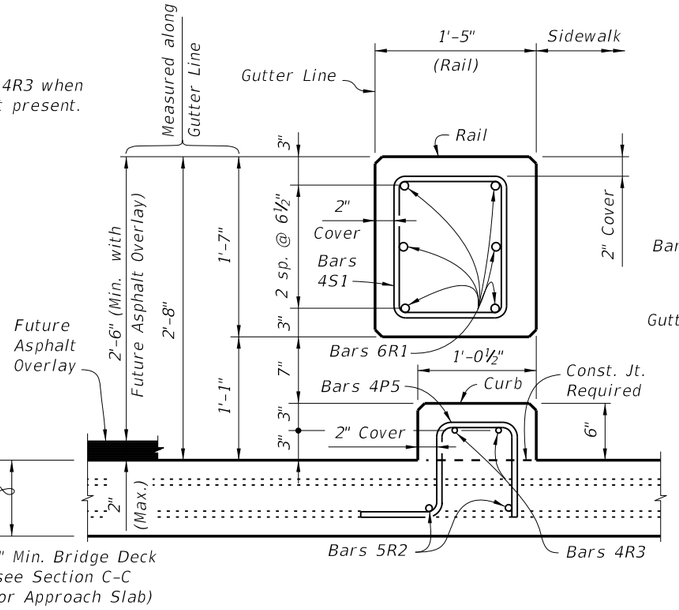

SECTION B-B

TYPICAL SECTIONS THRU RAILING ON BRIDGE DECK WITH SIDEWALK (SHOWN)
(RAILING ON APPROACH SLAB SIMILAR)

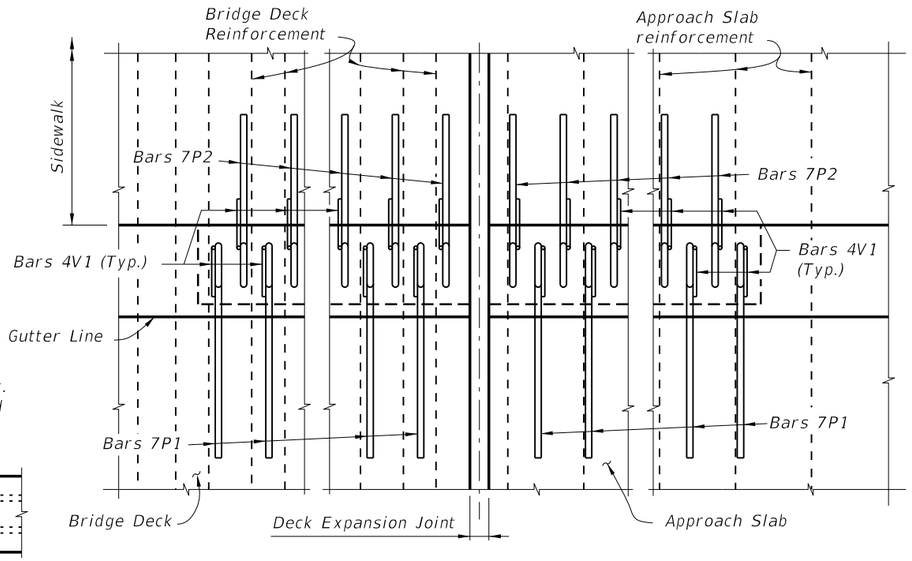

PARTIAL PLAN VIEW OF BRIDGE DECK AND APPROACH SLAB WITH SIDEWALK
(Bars R, S and T not shown for clarity)

RAILING ADJACENT TO SIDEWALK NOTES:

1) End Post detailed above, Interior Post and Approach Slab End Section similar.
2) For decks to 8½" place Bars 7P1 and 7P2 and 4V with the bottom mat of reinforcement as shown in Section A-A. For decks and slabs thicker than 8½" place Bars 7P1 and 7P2 and 4V with 6" embedment.
3) Alternate Bars 7P1 and 7P2 at each post. At End Posts 3 each (Min.) required, at Intermediate Post 6 each required.
4) Reverse direction of every other Bar 4V1 to match direction of Bars 7P1 or 7P2.
5) Shift deck and approach slab transverse reinforcement minimally to allow placement of Bars 7P & 4V.

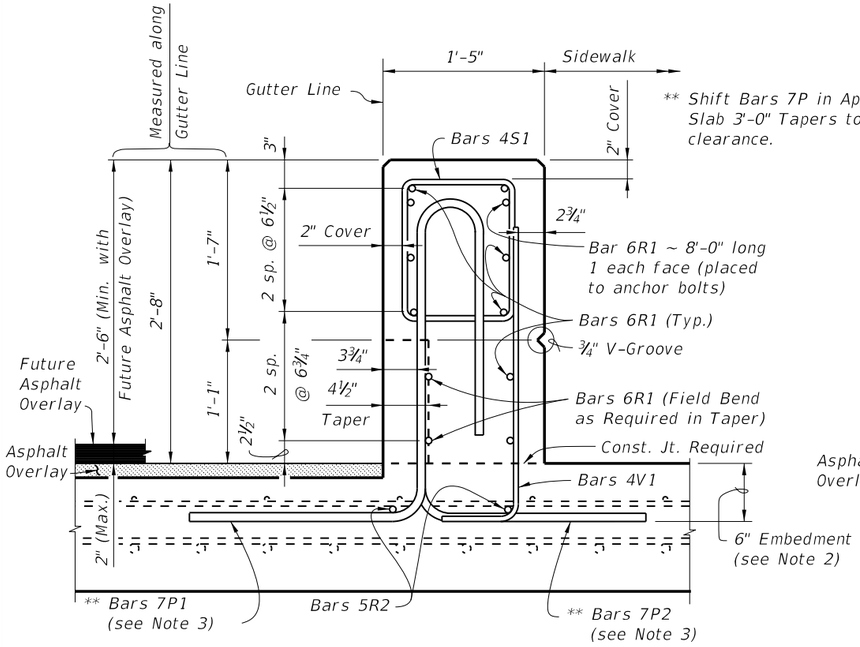

SECTION C-C

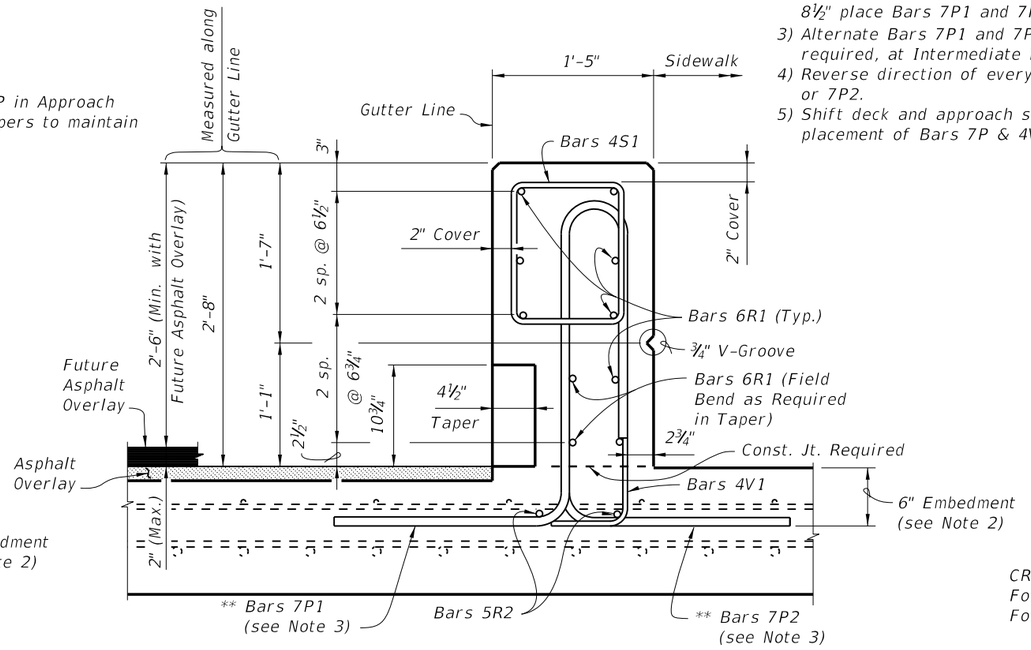

END VIEW D-D

TYPICAL SECTIONS THRU RAILING END SECTION ON APPROACH SLAB WITH SIDEWALK AND GUARDRAIL
(APPROACH SLAB (FLEXIBLE PAVEMENT APPROACHES) SHOWN, APPROACH SLAB (RIGID PAVEMENT APPROACHES) SIMILAR)

CROSS REFERENCES:
For Locations of Sections see Sheets 1 and 2.
For Quantities and Rebar Details see Sheet 5.

C:\d\projects\standards\structures\2013book\00424-4of7.dgn
rd960rh
2:02:07 PM
6/28/2012

LAST REVISION	REVISION	DESCRIPTION:				
07/01/05			FDOT DESIGN STANDARDS 2013	TRAFFIC RAILING - (CORRAL SHAPE)	INDEX NO. 424	SHEET NO. 4

CONVENTIONAL REINFORCING STEEL BENDING DIAGRAMS

BILL OF REINFORCING STEEL

MARK	SIZE	LENGTH	LB/BAR
P1	7	7'-4"	15.00
P2	7	7'-3"	14.82
P3	7	7'-2"	14.65
*** P4	7	7'-3"	14.82
* P5	4	2'-11"	1.94
R1	6	As Reqd.	1.5 (LB/LF)
R2	5	As Reqd.	1.04 (LB/LF)
* R3	4	As Reqd.	0.67 (LB/LF)
** S1	4	5'-0"	3.34
** S2	4	Varies 6'-3" Min. 16'-3" Max.	Varies 4.18 Min. 10.86 Max.
** S3	4	11'-3"	7.52
T	6	11'-4"	17.02
U	5	4'-8"	4.87
V1	4	3'-2"	2.12
*** V2	4	3'-6"	2.34

* Bars 4P5 and 4R3 are to be used with a curb only.
** Bend Bars 4S1, 4S2 & 4S3 around a #3 Stirrup Pin.
*** Bars 7P4 & 4V2 are to be used on C-I-P Concrete Retaining Walls.

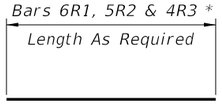

Bars 6R1, 5R2 & 4R3

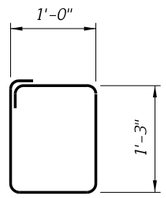

Stirrup Bar 4S1

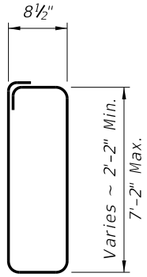

Stirrup Bar 4S2

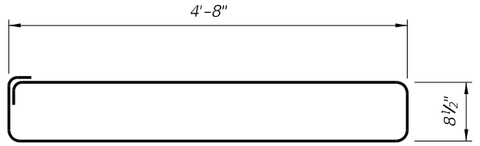

Stirrup Bar 4S3

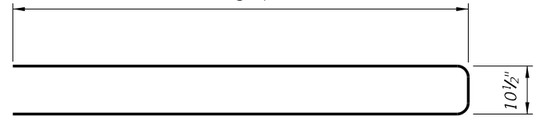

Stirrup Bar 6T

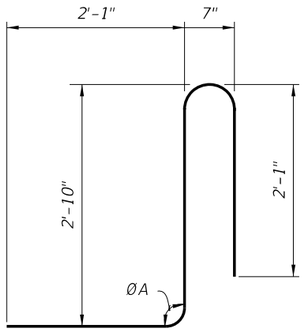

Bar 7P1

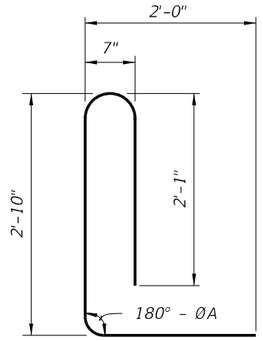

Bar 7P2

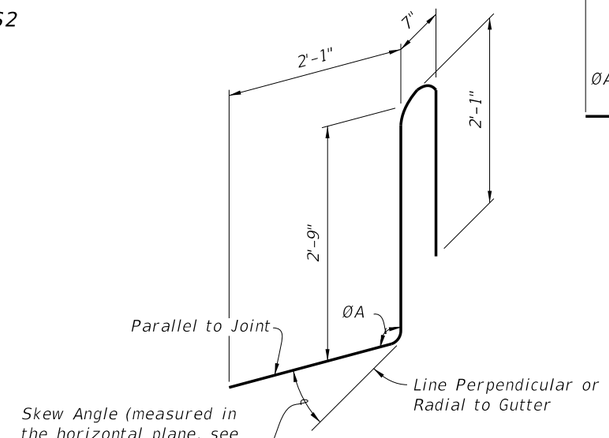

Bar 7P3 (Requires 3 Dimensional Bend)

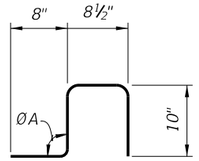

Bar 4P5 *

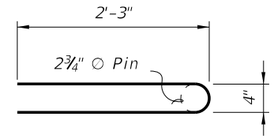

Stirrup Bar 5U

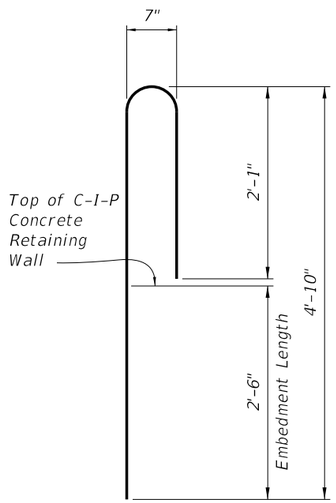

Bar 7P4 ***

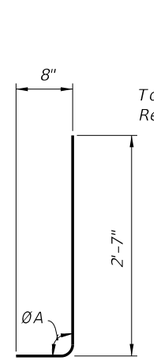

Bar 4V1

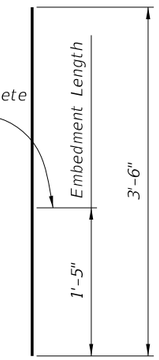

Bar 4V2 ***

REINFORCING STEEL NOTES:

1. All bar dimensions in the bending diagrams are out to out.
2. The reinforcement for the railing on a C-I-P Concrete Retaining Wall shall be the same as detailed above for a 8" deck with ØA = 90°, where applicable. If bottom horizontal legs of Bars 7P1, 7P3 and 4V1 prohibit placement, Bars 7P4 and 4V2 may be substituted for Bars 7P1, 7P3 and 4V1 as shown.
3. All reinforcing steel at the open joints shall have a 2" minimum cover unless otherwise noted.
4. At Construction Joints Bars 6R1, 5R2 and 4R3 may be continuous or spliced. Where bars are spliced provide a 2'-6" Min. lap length for Bar 6R1, a 2'-0" Min. lap length for Bars 5R2 and a 1'-3" Min. lap length for Bars 4R3.
5. The skew angle for Bars 7P3 may vary from joint to joint and side to side, see Structures Plans, Superstructure Sheets for details.

ROADWAY OR SIDEWALK CROSS-SLOPE	HIGH SIDE ØA	LOW SIDE ØA
0% to 2%	90°	90°
2% to 6%	93°	87°
6% to 10%	96°	84°

ØA shall be 90° if Contractor elects to place Railing Perpendicular to the Deck.

ESTIMATED TRAFFIC RAILING QUANTITIES

ITEM	CONCRETE QUANTITY (CY)	REBAR QUANTITY (LB)
Typical 10'-0" Section w/Curb	1.13	451
Typical 10'-0" Section w/o Curb	1.03	428
Approach Slab with Guardrail End Section	0.14 (per LF)	44 (per LF)

C:\d\projects\standards\structures\2013book\00424-5of7.dgn rd960rh 2:02:10 PM 6/28/2012

LAST REVISION	REVISION	DESCRIPTION:			INDEX NO.	SHEET NO.
07/01/05			FDOT DESIGN STANDARDS 2013	TRAFFIC RAILING - (CORRAL SHAPE)	424	5

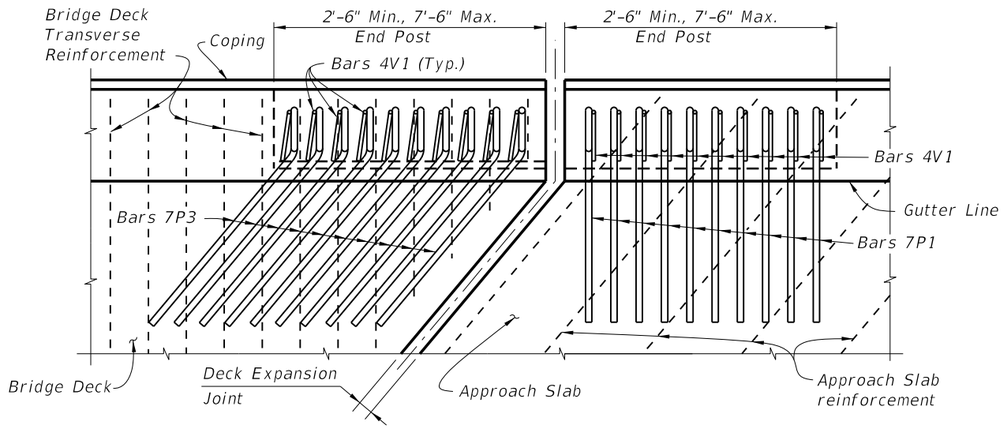

PARTIAL PLAN VIEW OF BRIDGE DECK AND APPROACH SLAB - SKEW ANGLE GREATER THAN 15 DEGREES

NOTES:

1) Railing expansion joint shall match the deck expansion joint which shall be turned perpendicular or radial to the gutter line. See Structures Plans, Superstructure and Approach Slab Sheets for details.

2) Bars 4S1 (not shown) shall be placed perpendicular or radial to the gutter.

BRIDGE DECK AND APPROACH SLAB WITHOUT GUARDRAIL ATTACHED (SHOWN):

3) End Post & Approach Slab End Section – Place Bars 7P1 & 4V1 in obtuse corners of intersection of deck joint and gutter line. Place Bars 7P3 & 4V1 in acute corners of intersection of deck joint and gutter line as required. Interior Post – use Bars 7P1 and 4V1 placed with bottom mat of reinforcement. Shift deck or slab reinforcement minimally to allow proper placement of Bars 7P and 4V and to facilitate placement of concrete.

APPROACH SLAB WITH GUARDRAIL ATTACHED (NOT SHOWN):

4) Place Bars 7P1 & 4V1 in obtuse corners of intersection of deck joint and gutter line and Bars 7P3 & 4V1 in acute corners of intersection of deck joint and gutter line as required. Shift deck or slab reinforcement minimally to allow proper placement of Bars 7P & 4V and to facilitate placement of concrete.

5) Begin placing Railing Bars 7P & 4V on Approach Slab at the railing end and proceed toward Begin or End Bridge to ensure placement of guardrail bolt holes. If required, adjustments to the bar spacing for Bars 7P & 4V shall be made immediately adjacent to Begin or End Bridge.

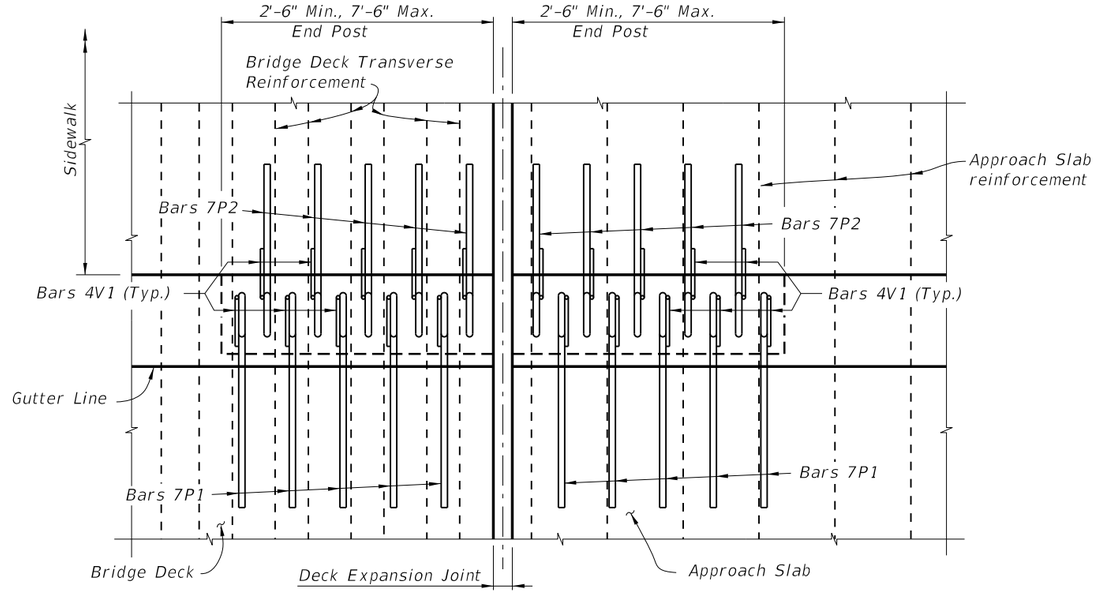

PARTIAL PLAN VIEW OF BRIDGE DECK AND APPROACH SLAB WITH SIDEWALK - 0 DEGREE SKEW ANGLE

NOTES:

1) Alternate Bars 7P1 with Bars 7P2 and reverse direction of every other Bar 4V1 as detailed above to facilitate placement of concrete.

2) Shift deck transverse reinforcement minimally to allow placement of Bars 7P & 4V.

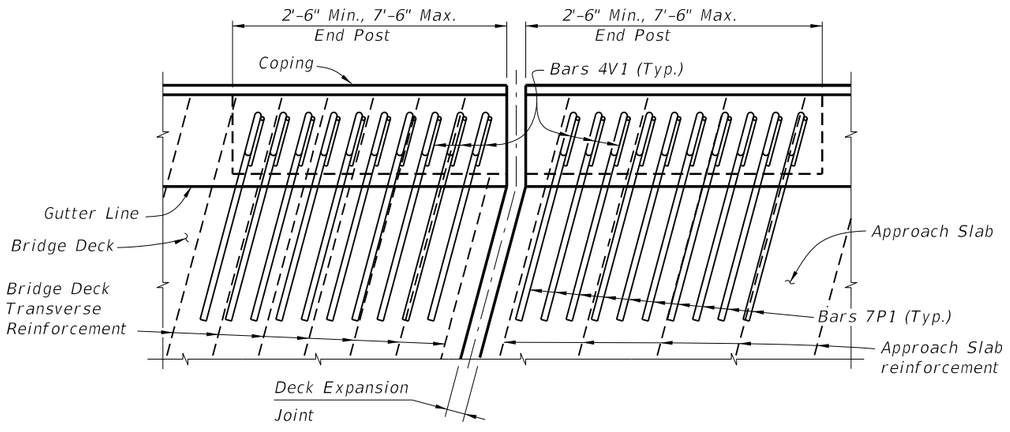

PARTIAL PLAN VIEW OF BRIDGE DECK AND APPROACH SLAB - SKEW ANGLE 15 DEGREES OR LESS

NOTES:

1) Railing expansion joint shall match the deck expansion joint which shall be turned perpendicular or radial to the gutter line. See Structures Plans, Superstructure and Approach Slab Sheets for details.

2) Bars 4S1 (not shown) shall be placed perpendicular or radial to the gutter.

3) Bars 7P & 4V in the Approach Slab may be rotated to match Approach Slab reinforcement or placed perpendicular or radial to the gutter line.

BRIDGE DECK AND APPROACH SLAB WITHOUT GUARDRAIL ATTACHED (SHOWN):

4) Rotate vertical Bars 7P & 4V to match bridge deck reinforcement. Shift deck & slab transverse reinforcement to allow proper placement of Bars 7P & 4V and to facilitate placement of concrete.

APPROACH SLAB WITH GUARDRAIL ATTACHED (NOT SHOWN):

5) Begin placing Railing Bars 7P & 4V on Approach Slab at the railing end and proceed toward Begin or End Bridge to ensure placement of guardrail bolt holes. If required, adjustments to the bar spacing for Bars 7P & 4V shall be made immediately adjacent to Begin or End Bridge.

6) Bars 7P at end of the railing shall be field cut and shifted to maintain clearance, see Railing End Taper Detail Sheet 2 for similar details.

GENERAL NOTES:

1) Deck Expansion Joint at begin or end bridge shown. Deck Expansion Joints at ℄ Pier or Intermediate Bents are similar.

2) Partial Plan Views shown are intended as guides only. See Structures Plans, Superstructure and Approach Slab Sheets for skew angles, joint orientation, dimensions and details.

LAST REVISION	REVISION	DESCRIPTION:				
07/01/05			FDOT DESIGN STANDARDS 2013	TRAFFIC RAILING - (CORRAL SHAPE)	INDEX NO. 424	SHEET NO. 6

6/28/2012 2:02:12 PM rd960rh C:\d*projects*standards*structures*2013book*00424-6of7.dgn

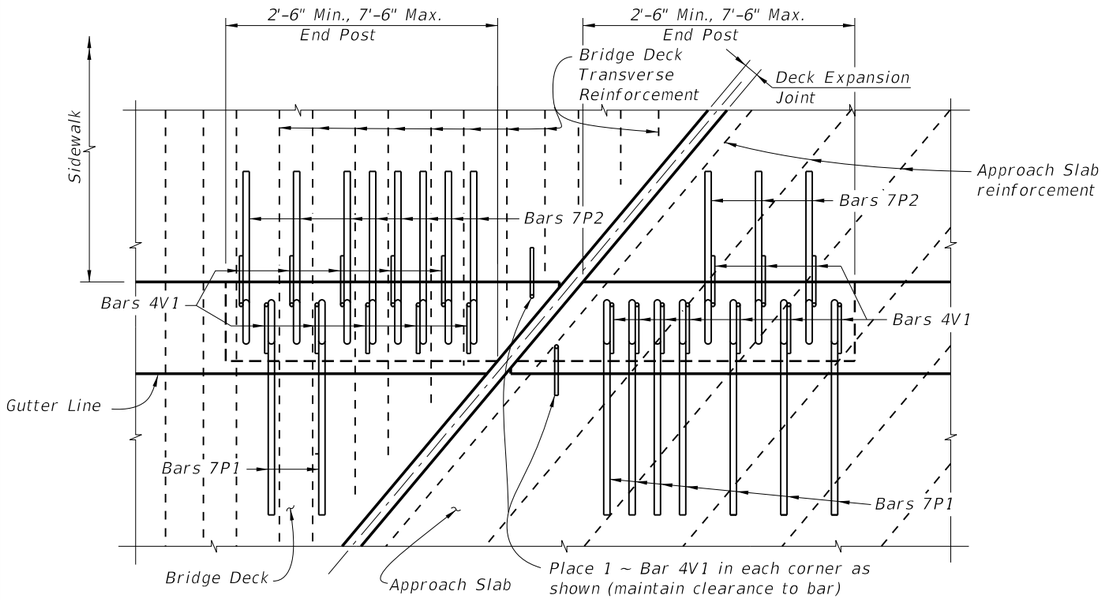

PARTIAL PLAN VIEW OF BRIDGE DECK AND APPROACH SLAB WITH SIDEWALK - SKEW ANGLE GREATER THAN 15 DEGREES

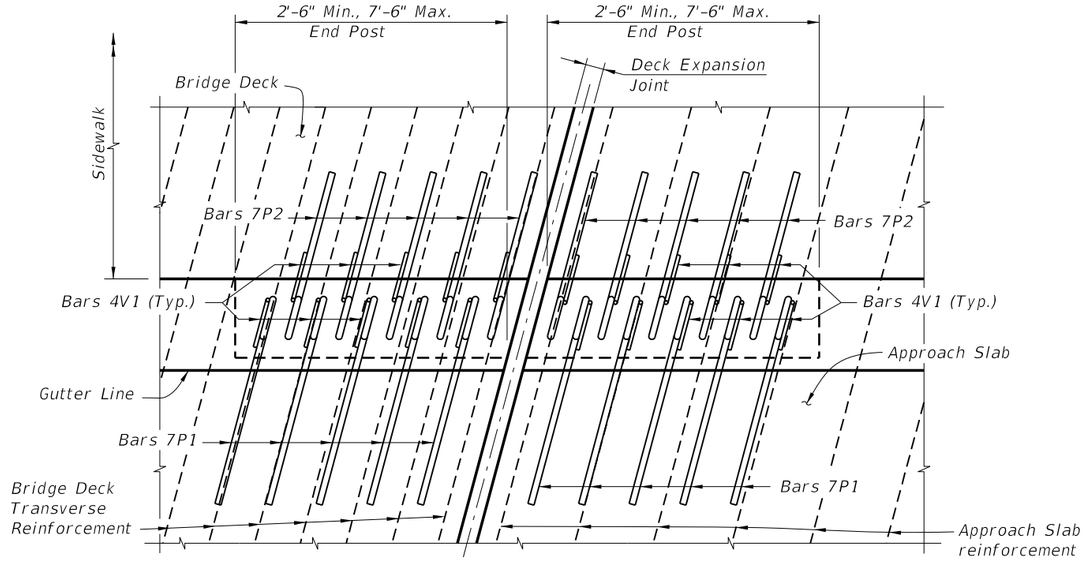

PARTIAL PLAN VIEW OF BRIDGE DECK AND APPROACH SLAB WITH SIDEWALK - SKEW ANGLE 15 DEGREES OR LESS

NOTES:

1) Railing ends at deck expansion joints shall follow the deck joint with allowance for joint movement. Expansion joint at the inside face of parapet shall be turned perpendicular or radial to this line. See Structures Plans, Superstructure and Approach Slab Sheets for details.
2) Bars 4S1 (not shown) shall be placed perpendicular or radial to the gutter.
3) Edge of Approach Slab adjacent to the roadway shall follow end of railing, Bars 7P at end of the railing shall be field cut and shifted to maintain clearance, see detail bottom left this sheet for similar details.

BRIDGE DECK AND APPROACH SLAB WITHOUT GUARDRAIL ATTACHED (SHOWN):

4) Alternate Bars 7P1 with Bars 7P2 and reverse direction of every other Bar 4V1 to facilitate placement of concrete.
5) Bars 7P & 4V shall be rotated to match bridge deck reinforcement. Shift deck transverse reinforcement minimally to allow placement of Bars 7P & 4V.
6) Railing End Post and reinforcement detailed above. Railing Interior Post reinforcement similar.

APPROACH SLAB WITH GUARDRAIL ATTACHED (NOT SHOWN):

7) Begin placing Railing Bars 7P & 4V on Approach Slab at the railing end and proceed toward Begin or End Bridge to ensure placement of guardrail bolt holes. If required, adjustments to the bar spacing for Bars 7P & 4V shall be made immediately adjacent to Begin or End Bridge.

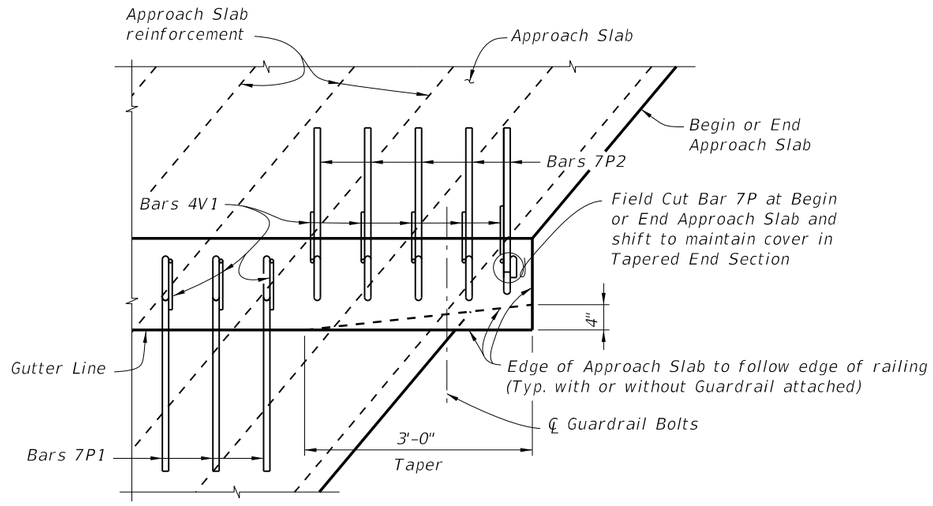

PARTIAL PLAN VIEW AT BEGIN OR END APPROACH SLAB WITH SIDEWALK AND RAILING WITH GUARDRAIL ATTACHED - SKEW ANGLE GREATER THAN 15 DEGREES SHOWN, 15 DEGREES OR LESS SIMILAR

NOTES:

1) Railing ends at deck expansion joints shall follow the deck joint with allowance for joint movement. Expansion joint at the inside face of parapet shall be turned perpendicular or radial to this line. See Structures Plans, Superstructure and Approach Slab Sheets for details.
2) Bars 4S1 (not shown) shall be placed perpendicular or radial to the gutter.

BRIDGE DECK AND APPROACH SLAB WITHOUT GUARDRAIL ATTACHED (NOT SHOWN):

3) Deck transverse reinforcement may be shifted minimally as required to allow proper placement of Bars 7P & 4V and to facilitate placement of concrete. Bars 7P1 & 4V1 or 7P2 & 4V1 shall be used on opposing sides of the joint depending on the direction of the skew, see Detail above. Approach Slab reinforcement may be shifted if conflicts occur.
4) Interior Post – alternate Bars 7P1 with Bars 7P2 and reverse direction of every other Bar 4V1 to facilitate placement of concrete.
5) End Post – alternate Bars 7P1 with Bars 7P2 and reverse direction of Bars 4V1 (as detailed) where possible.

APPROACH SLAB WITH GUARDRAIL ATTACHED (SHOWN):

6) Use Bars 7P2 and reverse direction of Bars 4V1 where skew restricts use of Bars 7P1 & 4P1.
7) Begin placing Railing Bars 7P & 4V on Approach Slab at the railing end and proceed toward Begin or End Bridge to ensure placement of guardrail bolt holes. If required, adjustments to the bar spacing for Bars 7P & 4V shall be made immediately adjacent to Begin or End Bridge.

6/28/2012 2:02:15 PM rd960rh C:\d\projects\standards\structures\2013book\00424-7of7.dgn

LAST REVISION	REVISION	DESCRIPTION:				
07/01/05			FDOT DESIGN STANDARDS 2013	TRAFFIC RAILING - (CORRAL SHAPE)	INDEX NO. 424	SHEET NO. 7

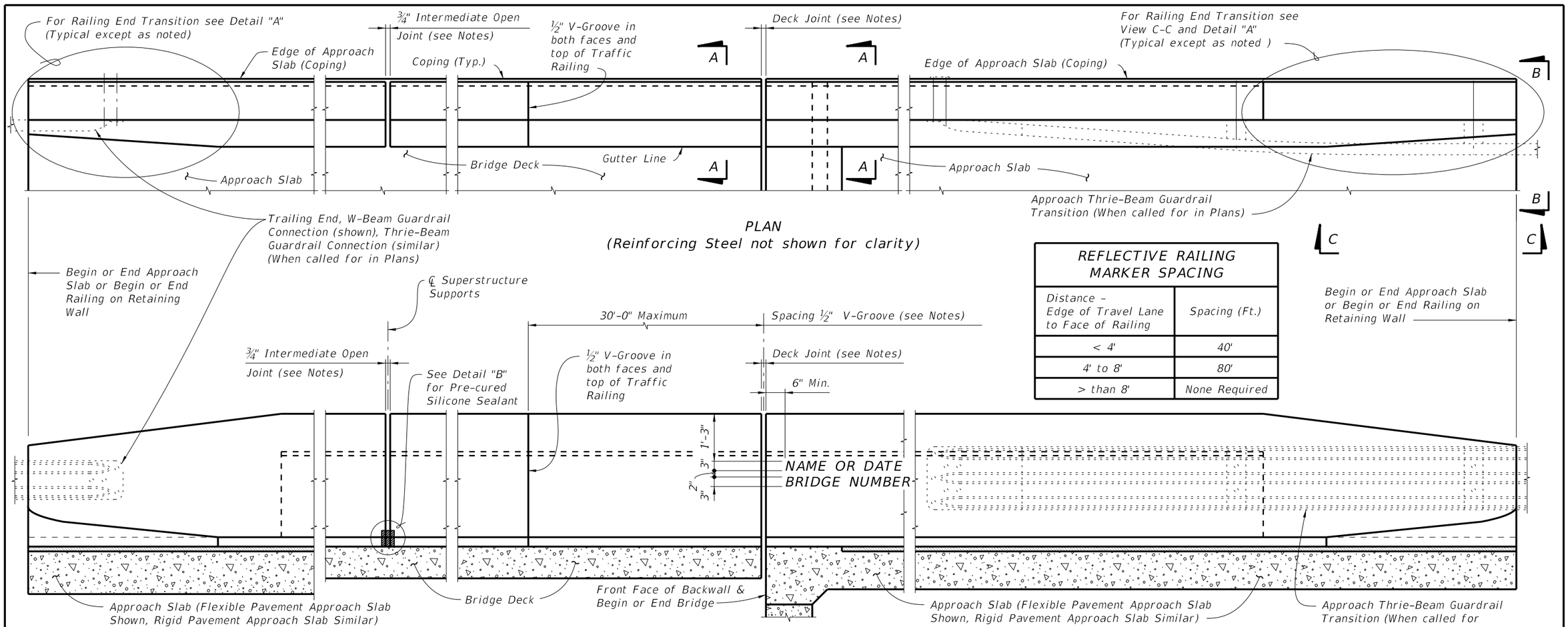

PLAN
(Reinforcing Steel not shown for clarity)

REFLECTIVE RAILING MARKER SPACING	
Distance – Edge of Travel Lane to Face of Railing	Spacing (Ft.)
< 4'	40'
4' to 8'	80'
> than 8'	None Required

ELEVATION OF INSIDE FACE OF RAILING
(Reinforcing Steel not shown for clarity)
(Railing on Bridge Deck and Approach Slab shown, Railing on Retaining Wall Similar)

CROSS REFERENCE:
For Section A-A, End View B-B and Detail "A" see Sheet 2.
For Detail "B" see Sheet 3.

TRAFFIC RAILING NOTES

This railing has been structurally evaluated to be equivalent or greater in strength to other safety shape railings which have been crash tested to NCHRP Report 350 TL-5 Criteria.

CONCRETE AND REINFORCING STEEL : See Structures Plans, General Notes.

MARKERS : Elevation Markers shall be placed on top of the Traffic Railing Railing at the end bents. On bridges longer than 100 Ft. one marker shall be placed at each end of the bridge. On bridges 100 Ft. or less one marker shall be placed at one end of the bridge only. Markers are to be furnished by the Florida Department of Transportation and installed by the Contractor. The cost of installing the markers shall be included in the Contract Unit Price for the Traffic Railing. The Department will determine the vertical Datum information for the marker.

SUPERELEVATED BRIDGES : At the option of the Contractor the Traffic Railing on superelevated bridges may be constructed perpendicular to the roadway surface. If an adjoining railing is constructed plumb, transition the end of the Traffic Railing from perpendicular to plumb over a minimum distance of 20'-0". The cost of all modifications will be at the Contractor's expense.

GUARDRAIL : For Guardrail connection details, see Index No. 400.

RAILINGS ON RETAINING WALLS : If the Traffic Railing is to be provided on a retaining wall, the railing section will be the same as shown on Sheet 2. All other details such as the guardrail transition attachment, the maximum spacing of the ¾" open joints and ½" V-groove shall apply.

V-GROOVES : Construct ½" V-Grooves plumb. Space V-Grooves equally between ¾" Open Joints and/or Deck Joints and at V-Groove locations on Retaining Wall footings.

NAME, DATE, AND BRIDGE NUMBER : The Name and Bridge Number shall be placed on the Traffic Railing so as to be seen on the driver's right side when approaching the bridge. The Date shall be placed on the driver's left side when approaching the bridge. The Name shall be as shown in the General Notes in the Structures Plans. The Date shall be the year the bridge is completed. For a widening when the existing railing is removed, use both the existing date and the year of the widening. Black plastic letters and figures 3" in height may be used, as approved by the Engineer, in lieu of the letters and figures formed by ⅜" V-Grooves. V-Grooves shall be formed by preformed letters and figures.

JOINTS : See Structures Plans, Superstructure, Approach Slab and Retaining Walls Sheets for actual dimensions and joint orientation. Provide open Railing Joints at Deck Expansion Joint locations matching the dimensions of the Deck Joint. For treatment of Railings on skewed bridges see Index No. 420.

Provide ¾" Intermediate Open Joints shall be provided at :
(1) – Superstructure supports where slab is continuous.
(2) – Ends of approach slabs when adjacent to retaining walls and at expansion joints on retaining wall junction slabs.

REFLECTIVE RAILING MARKERS : Reflective Railing Markers shall meet Specification Section 993. Install markers on top of the Traffic Railing 2" from the face on the traffic side at the spacing shown in the table above. Reflector color (white or yellow) shall match the color of the near edgeline. The cost of the reflective markers shall be included in the Contract Unit Price for the Traffic Railing

6/28/2012 2:02:17 PM rd960rh C:\d\projects\standards\structures\2013book\00425-1of3.dgn

LAST REVISION	REVISION	DESCRIPTION:				
01/01/11			FDOT DESIGN STANDARDS 2013	TRAFFIC RAILING - (42" F SHAPE)	INDEX NO. 425	SHEET NO. 1

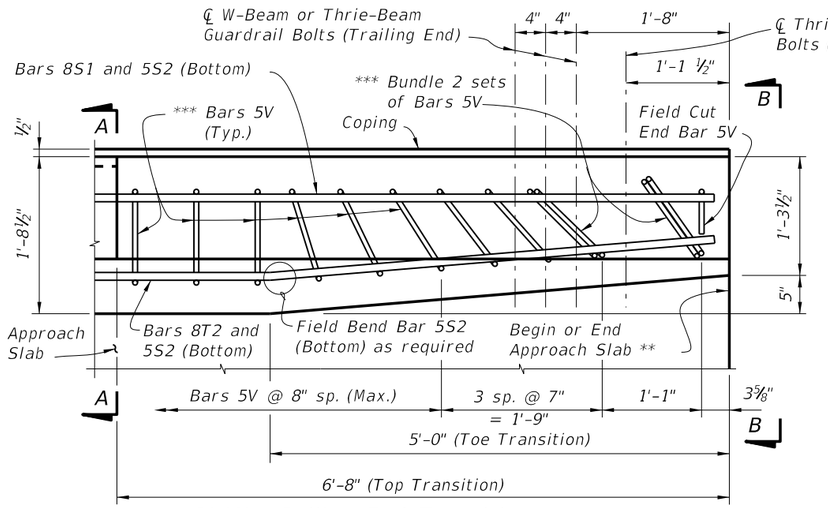

PLAN - Railing End Transition
(Showing Bars 5V, 8S1, 5S2 and 8T2)

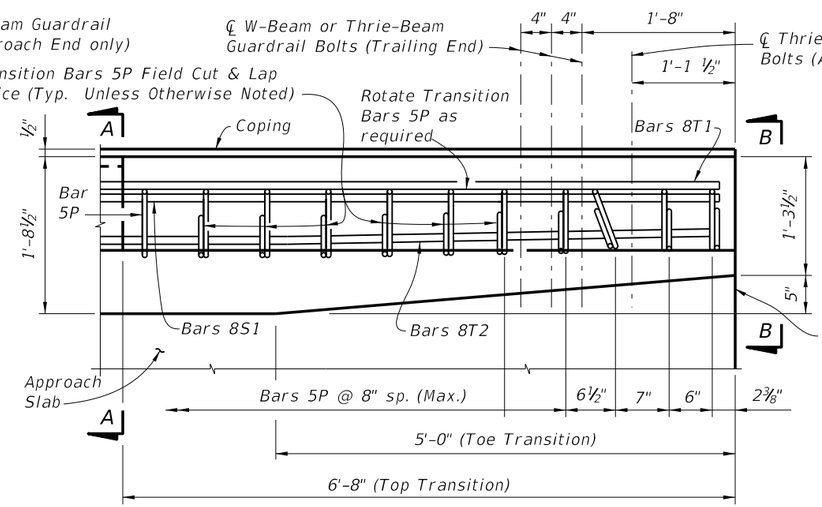

PLAN - Railing End Transition
(Showing Transition Bars 5P and Bars 8S1, 8T1 & 8T2)

NOTE:
Begin placing Railing Bars 5P and 5V on Approach Slab at the railing end and proceed toward Begin or End Bridge to ensure placement of guardrail bolt holes. If required, adjustments to the bar spacing for Bars 5P and 5V shall be made immediately adjacent to Begin or End Bridge. Shift and rotate Bars 5P and 5V (see Detail "A") as required to maintain cover in Railing End Transition.

* Where railings of adjacent bridges are to be built back to back, the outside vertical plane of the railing and deck may coincide along a plane centered 1'-8½" from each gutter line. A bond breaker will be required. See Structures Plans, Superstructure Sheets for Details.

** See joint orientation note on Sheet 1.

*** Rotate Bars 5V as shown to maintain clearance.

DETAIL "A"

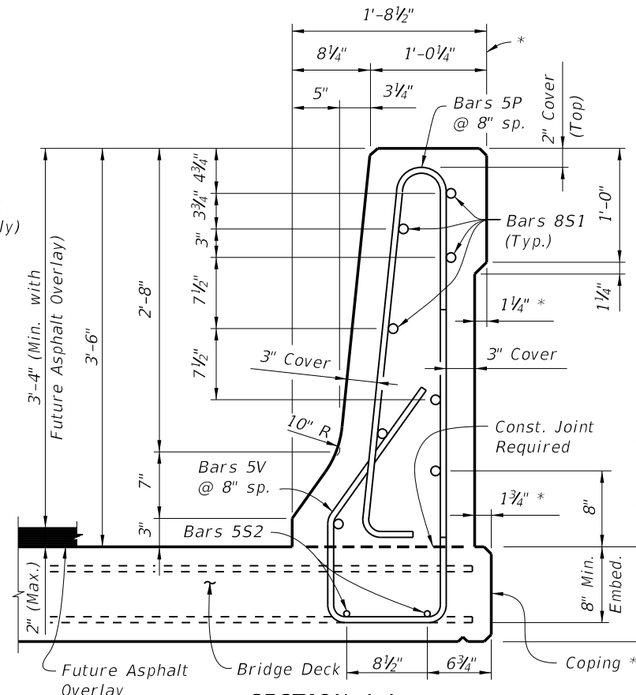

SECTION A-A
TYPICAL SECTION THRU TRAFFIC RAILING
(SECTION THRU BRIDGE DECK SHOWN - SECTION THRU APPROACH SLAB SIMILAR)

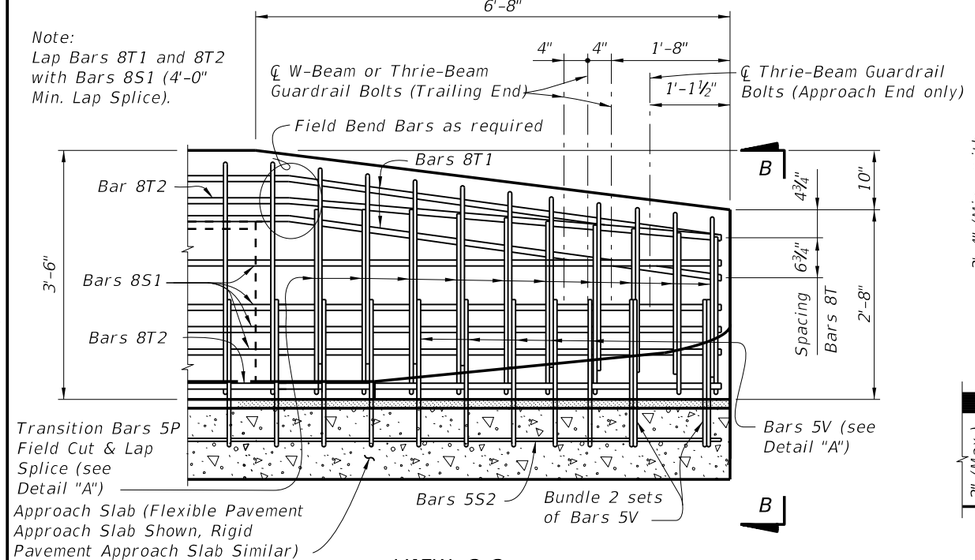

VIEW C-C
ELEVATION - RAILING END TRANSITION
(Guardrail and back leg of Stirrups not shown for clarity)

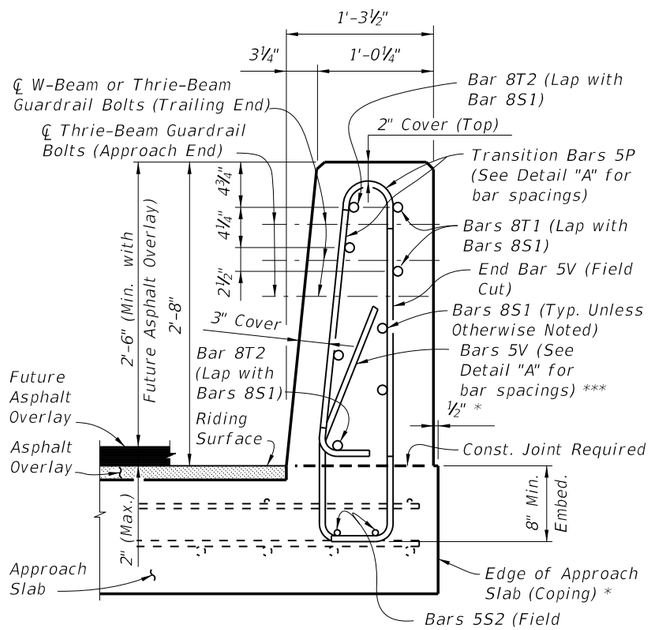

VIEW B-B
(Section thru Approach Slab shown, Section thru Retaining Walls similar)

C:\d_projects\standards\structures\2013book\00425-2of3.dgn
rd960rh
2:02:20 PM
6/28/2012

LAST REVISION	REVISION	DESCRIPTION:				
01/01/11			FDOT DESIGN STANDARDS 2013	TRAFFIC RAILING - (42" F SHAPE)	INDEX NO. 425	SHEET NO. 2

CONVENTIONAL REINFORCING STEEL BENDING DIAGRAMS

BILL OF REINFORCING STEEL		
MARK	SIZE	LENGTH
P	5	7'-5"
S1	8	As Reqd.
S2	5	As Reqd.
T1 & T2	8	13'-0"
V	5	6'-2"

ROADWAY CROSS-SLOPE	LOW GUTTER		HIGH GUTTER	
	ØA	ØB	ØA	ØB
0% to 2%	90°	90°	90°	90°
2% to 6%	93°	87°	87°	93°
6% to 10%	96°	84°	84°	96°

ØA and ØB shall be 90° if Contractor elects to place Railing perpendicular to the Deck.

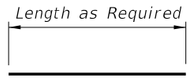

BARS 8S1 & 5S2

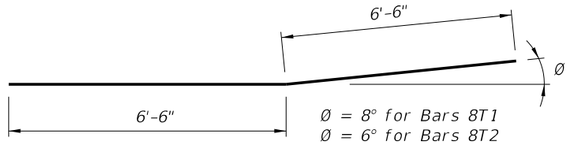

TRANSITION BARS 8T1 & 8T2
(2 of each required per Railing End Transition)

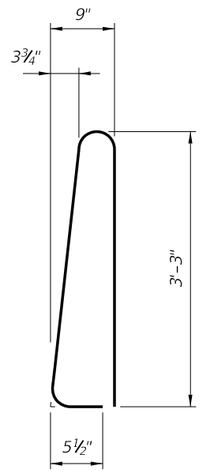

STIRRUP BAR 5P

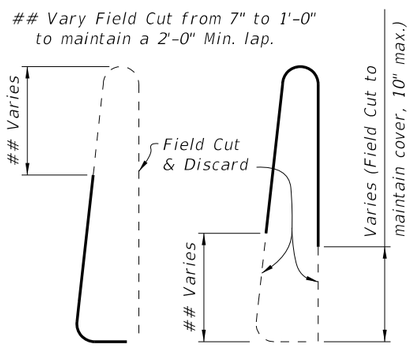

TRANSITION STIRRUP BARS 5P
To Be Field Cut (10 of each required per Railing End Transition)

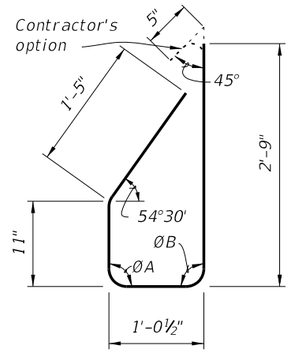

STIRRUP BAR 5V

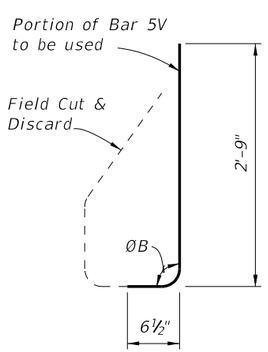

END STIRRUP BAR 5V
To Be Field Cut
(One required per Railing End Transition)

REINFORCING STEEL NOTES:
1. All bar dimensions in the bending diagrams are out to out.
2. The reinforcement for the railing on a retaining wall shall be the same as detailed above for a 10" deck with ØA = ØB = 90°.
3. All reinforcing steel at the open joints shall have a 2" minimum cover.
4. Bars 8S1 may be continuous or spliced at the construction joints. Lap splices for Bars 8S1 and 5S2 shall be a minimum of 4'-0" and 2'-0", respectively.
5. The Contractor may utilize Welded Wire Reinforcement when approved by the Engineer. Welded Wire Reinforcement shall conform to ASTM A497.

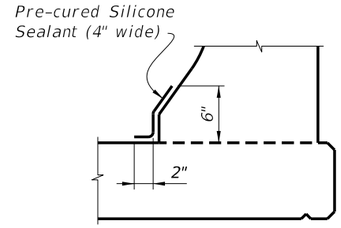

DETAIL "B" - SECTION
AT INTERMEDIATE OPEN JOINT

INTERMEDIATE JOINT SEAL NOTES:
1. At Intermediate Open Joints, seal the lower 6" portion of the open joint with Pre-cured Silicone Sealant in accordance with Specification Section 932.
2. Apply sealant prior to any Class V finish coating and remove all curing compound and loose material from the surface prior to application of bonding agent.
3. The cost of the Pre-cured Silicone Sealant shall be included in the Contract Unit Price for the Traffic Railing.

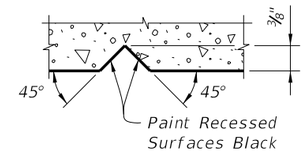

SECTION THRU RECESSED
"V" GROOVE TO FORM INSCRIBED
LETTERS AND FIGURES

ESTIMATED TRAFFIC RAILING QUANTITIES		
ITEM	UNIT	QUANTITY
Concrete	CY/LF	0.154
Reinforcing Steel	LB/LF	44.71

Note:
The estimated railing quantities are based on a 2% deck cross slope; railing on low side of deck.

C:\d\projects\standards\structures\2013book\00425-3of3.dgn
rd960rh
2:02:22 PM
6/28/2012

LAST REVISION	REVISION	DESCRIPTION:			INDEX NO.	SHEET NO.
01/01/11			FDOT DESIGN STANDARDS 2013	TRAFFIC RAILING - (42" F SHAPE)	425	3

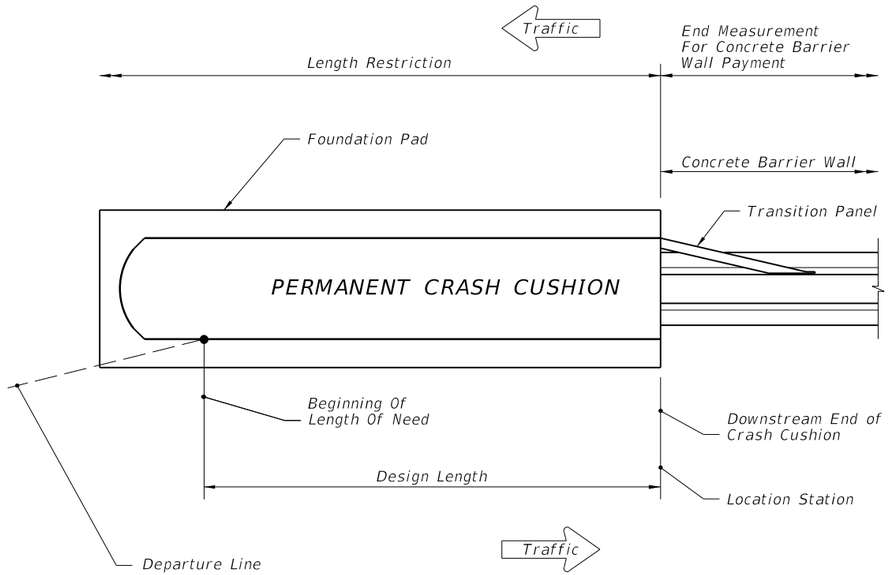

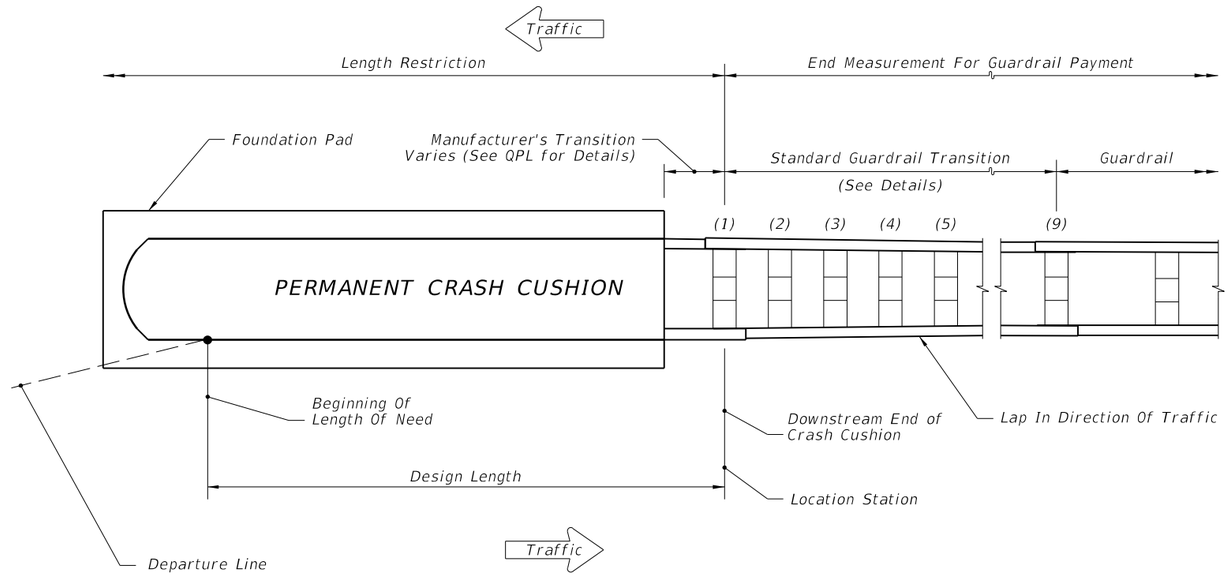

Concrete Barrier Wall Applications		
Design Length (ft.)	Design Speed (mph)	Crash Test Level
6.00	35	TL-2
6.00	40	
6.00	45	
9.00	50	TL-3
12.00	55	
15.00	≥ 60	

GENERAL NOTES

1. Index 430 is applicable for permanent crash cushion installations that shield the ends of Concrete Barrier Wall or Guardrail, only.
2. Design Length is based on a given design speed and the shortest Crash Cushion available on the Qualified Products List (QPL).
3. For High Speed Facilities with a Design Speed greater than 60 mph, use a TL-3 Crash Cushion.
4. Assemble and install Crash Cushions according to the limitations noted on the Qualified Products List (QPL) webpage, the manufacturer's specifications, and the applicable crash cushion drawings posted on the QPL.
5. When subjected to reverse direction hits, construct Transition Panels from Concrete Barrier Walls to Crash Cushions; for additional details refer to the applicable crash cushion drawings on the QPL.
6. Galvanize metallic components to meet the requirements for Steel Guardrail, Section 967 of the Standard Specifications for Road and Bridge Construction.
7. For Guardrail Applications, construct the Manufacturer's Transition between the Permanent Crash Cushion and the Standard Guardrail Transition; refer to all Standard Guardrail Transition details of this index.
8. For additional information on the End Measurement for Guardrail Payment, refer to the Standard Specifications for Road and Bridge Construction, Section 536.
9. A yellow Type I Object Marker shall be centered 3' in front of the crash cushion nose. Mounting hardware shall be in conformance with Section 993 of the Standard Specifications for Road and Bridge Construction.

   As an option, the contractor may install reflective sheeting on the nose of the crash cushion. The sheeting to be used must be solid yellow, Type III or better and must be a product listed on the Department's Qualified Products List (QPL). The sheeting to be applied to the nose of the crash cushion shall be a minimum of 360 square inches with a minimum height of 15 inches.

Guardrail Applications		
Design Length (ft.)	Design Speed (mph)	Crash Test Level
12.50	35	TL-2
12.50	40	
12.50	45	
15.63	50	TL-3
18.75	55	
18.75	≥ 60	

PERMANENT CRASH CUSHION APPLICATIONS

LAST REVISION	REVISION	DESCRIPTION:		FDOT DESIGN STANDARDS 2013	CRASH CUSHION DETAILS	INDEX NO.	SHEET NO.
01/01/13						430	1

C:\d\projects\standards\roadway\00400-s\DEV\00430-01-DEV.dgn
RD960P0
10:38:29 AM
1/9/2013

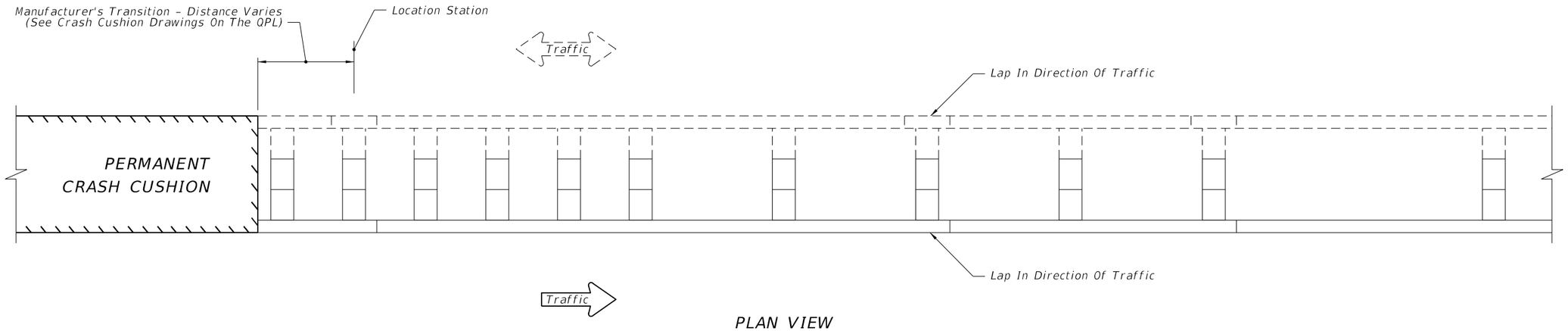

PLAN VIEW

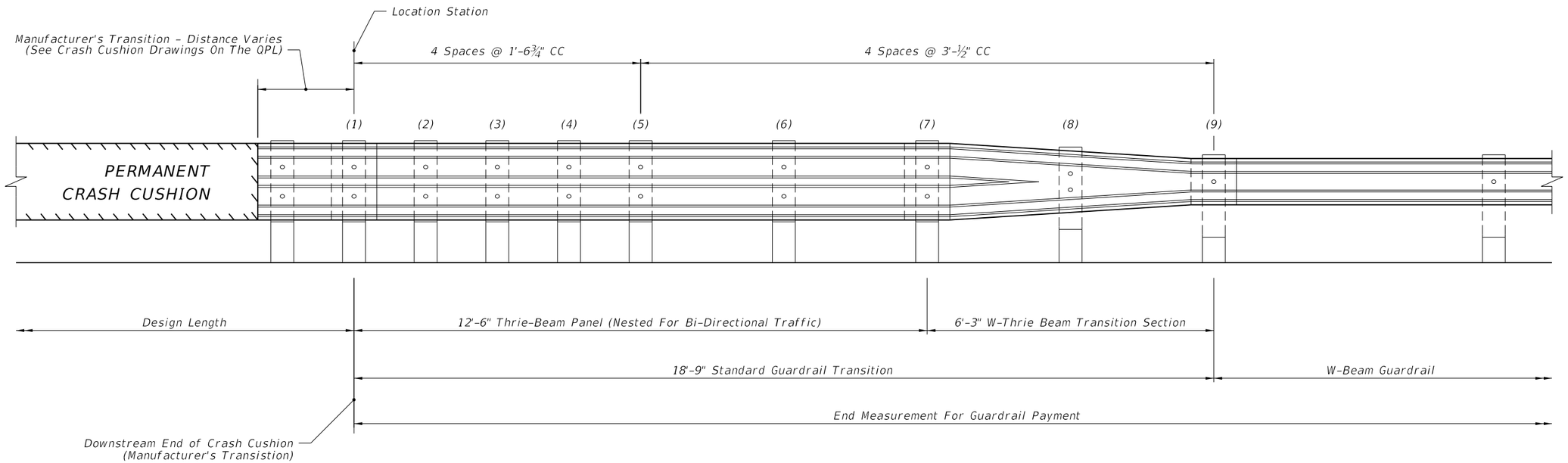

ELEVATION VIEW

STANDARD GUARDRAIL TRANSITION

C:\d\projects\standards\roadway\00400-s\DEV\00430-02-dev.dgn
RD960P0
10:40:33 AM
1/9/2013

LAST REVISION	REVISION	DESCRIPTION:		FDOT DESIGN STANDARDS 2013	CRASH CUSHION DETAILS	INDEX NO.	SHEET NO.
01/01/13						430	2

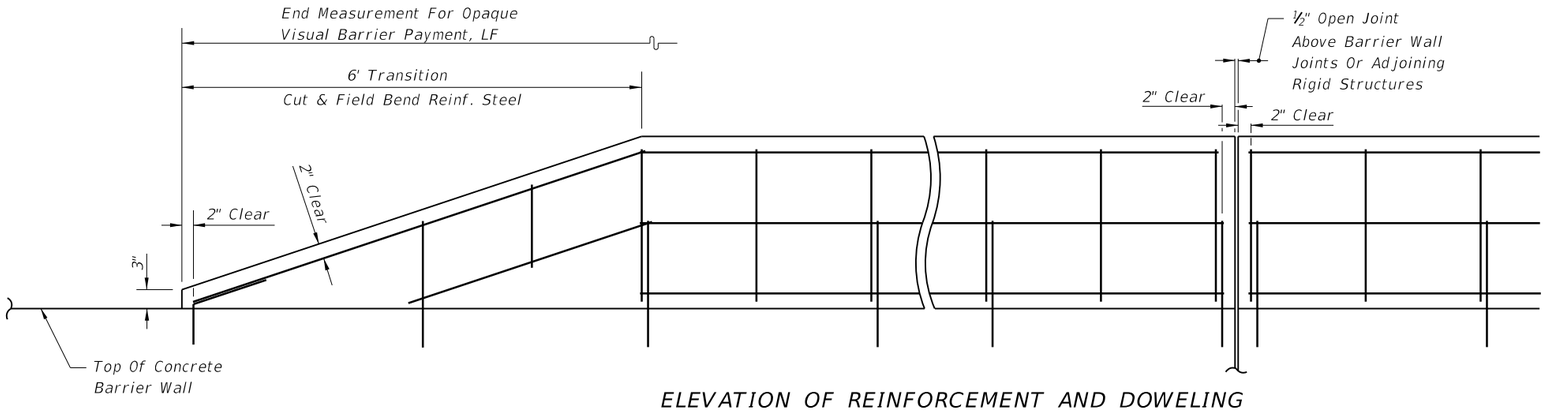

ELEVATION OF REINFORCEMENT AND DOWELING

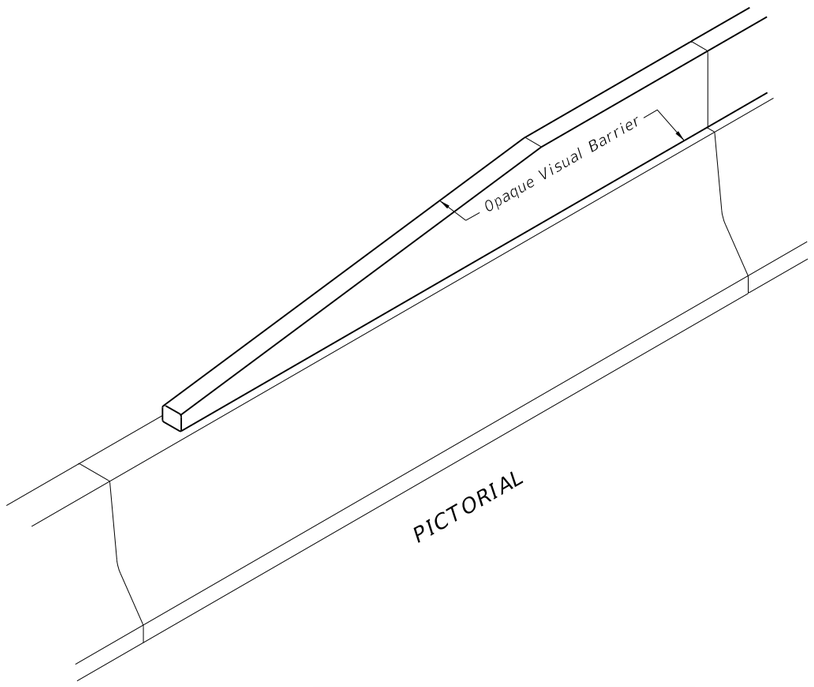

PICTORIAL

ESTIMATED QUANTITIES, LF	
Concrete	0.042 CY
Reinforcing Steel	3.27 Lbs.*
*3.38 Lbs. With 2'-2" Dowels	

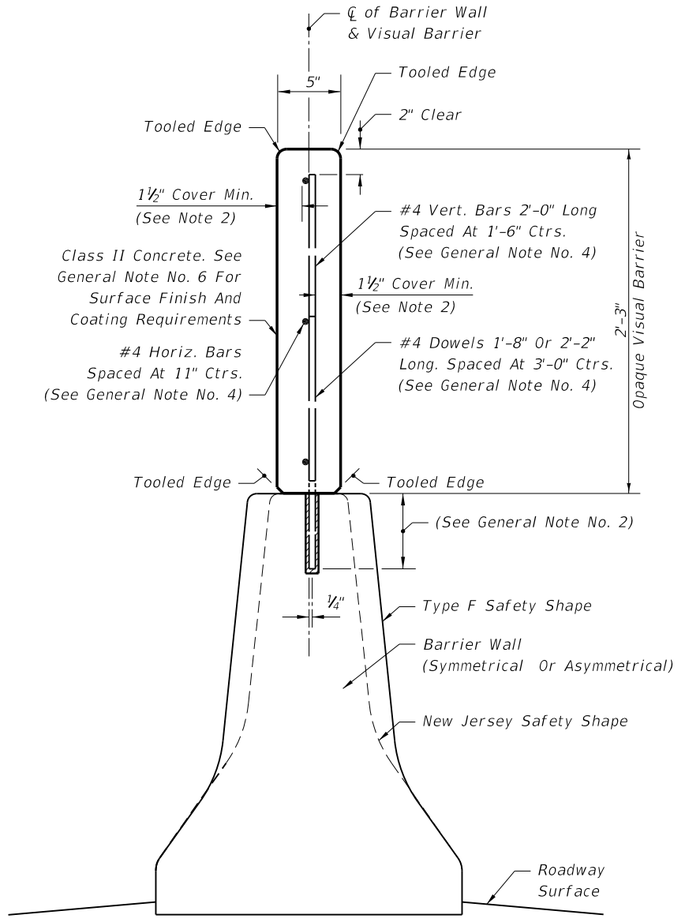

END VIEW

GENERAL NOTES

1. The opaque visual barrier is intended to function as a visual screen, and is not intended to resist vehicle impact loads nor to restrain, contain or restrict vehicles or cargo. The barrier is designed to withstand zone wind loading and strikes by light debris; and, designed to yield to exceptional strikes by vehicles or cargo, and to contain ruptured segments of the screen when yielding to such strikes.

2. When the opaque visual barrier is constructed on an existing barrier wall, dowels shall be 1'-8" in length, embedded 6" into the barrier wall and set with an approved chemical grout. Embedment holes shall be ⅝" diameter, drilled to a depth ¼" below the tip of the dowel unless greater depth is required to accept manufactured grout capsules.

   When the opaque visual barrier is constructed in conjunction with project concrete barrier walls, dowels may be set as described above, in either the drilled or preformed holes; or, placed when the barrier wall is cast. For dowels that are placed when the wall is cast, the dowel shall be 2'-2" in length and embedded to a depth of 12".

   When longitudinal reinforcing bars are encountered in the stem of existing barrier, shift the dowels to clear, maintaining the 1½" Cover Minimum to the face of the Opaque Visual Barrier.

3. For both double and single faced concrete barrier walls the opaque visual barrier is to be located in the center of the top of the wall.

   For single faced barrier walls that are constructed around other vertical structures, the opaque visual barrier shall follow the alignments of only one of the walls and be centered atop that wall.

   For dual median barrier walls that follow differential profiles, the opaque visual barrier shall be constructed atop the wall with the higher elevation, unless conditions dictate otherwise. Lateral transitions or end overlaps for opaque visual barriers that alternate between dual walls shall be detailed in the plans.

   For median barrier walls that are divided when connecting to separated bridges, the opaque visual barrier shall be constructed atop the approach side barrier wall, unless differential profiles dictate locating the opaque visual barrier on the departure side barrier wall.

   Opaque visual barriers to be located on capped fills between dual barrier walls shall be detailed in the plans.

4. In lieu of the reinforcement shown, the Contractor may substitute welded wire fabric equal to or better than that shown, when approved by the Engineer. Details shall be submitted with requests for substitution.

5. The Contractor may construct contiguous precast concrete panels in lieu of the cast-in-place opaque screen when approved by the Engineer. Panel design and method for anchorage to the barrier wall shall be detailed by shop drawings when requesting the Engineer's approval.

   The Contractor may construct the opaque screen monolithically with the barrier wall; however, the screen design shall not be modified so as to cause the wall to be dynamically active from strikes on the screen; see design considerations in Note No. 1 above.

6. Exposed concrete surfaces shall have a Class 3 surface finish in accordance with Section 521 of the Standard Specification, unless another finish is called for in the plans. The surfaces shall have a Class 5 Applied Finish Coating in accordance with Section 400 only when called for in the plans.

7. Payment for opaque visual barrier shall be full compensation for concrete, reinforcement, dowels, casting, placement, drilling, grouting, tooling, finishing and work incidental thereto, and shall be paid for under the contract unit price for Opaque Visual Barrier (Concrete) (2'-3" Height), LF.

6/28/2012 2:02:24 PM rd960rh C:\d\projects\standards\roadway\00400-s\00461-01.dgn

LAST REVISION	REVISION	DESCRIPTION:		FDOT DESIGN STANDARDS 2013	OPAQUE VISUAL BARRIER	INDEX NO.	SHEET NO.
07/01/07			STATE OF FLORIDA DEPARTMENT OF TRANSPORTATION			461	1

TRAFFIC RAILING NOTES

This Traffic Railing Retrofit has been structurally evaluated to be equivalent or greater in strength to a design which has been successfully crash tested in accordance with NCHRP Report 350 TL-4 criteria.

CONCRETE: Concrete for Transition Blocks and Curbs shall be Class II (Bridge Deck).

REINFORCING STEEL: Reinforcing steel shall be ASTM A615, Grade 60.

THRIE-BEAM GUARDRAIL: Steel Thrie-Beam Elements shall meet the requirements for Class B (10 Gauge) Guardrail of AASHTO M 180, Type II (Zinc coated). The minimum panel length for Thrie-Beam Elements shall be 12'-6". Field drilled holes for Post connections shall be ¾" by 2½" slotted holes.

GUARDRAIL BOLTS: Guardrail bolts, nuts and washers shall be in accordance with AASHTO M180.

GUARDRAIL POSTS AND BASE PLATES: Posts and Base Plates shall be in accordance with ASTM A36 or ASTM A709 Grade 36.

ANCHOR BOLTS, NUTS AND WASHERS: Adhesive-Bonded Anchors and Anchor Bolts shall be fully threaded rods in accordance with ASTM F1554 Grade 105 or ASTM A193 Grade B7. At the Contractor's option, Anchor Bolts for through bolting may be in accordance with ASTM 449. All Nuts shall be single self-locking hex nuts and in accordance with ASTM A563 or ASTM A194. Flat Washers shall be in accordance with ASTM F436 and Plate Washers (for long slotted holes only) shall be in accordance with ASTM A36 or ASTM A709 Grade 36. After the nuts have been snug tightened, the anchor bolt threads shall be distorted to prevent removal of the nuts. Distorted threads and the exposed trimmed ends of anchors shall be coated with a galvanizing compound in accordance with the Specifications.

COATINGS: All Nuts, Bolts, Anchors, Washers, Guardrail Posts, Anchor Plates and Base Plates shall be hot-dip galvanized in accordance with the Specifications. Guardrail Post Assemblies shall be hot-dip galvanized after fabrication.

ADHESIVE-BONDED ANCHORS AND DOWELS: Adhesive Bonding Material Systems for Anchors and Dowels shall comply with Specification Section 937 and be installed in accordance with Specification Section 416. The field testing proof loads required by Specification Section 416 shall be 15,000 lbs. for ⅞" Ø anchor bolts; 55,000 lbs. for the 1¼" anchor bolts with 13" embedment; and 30,500 lbs. for the 1¼" Ø anchor bolts with 5" embedment.

BRIDGES ON CURVED ALIGNMENTS: The details presented in these Standards are shown for bridges on tangent alignments. Details for bridges on horizontally curved alignments are similar.

POST SPACING: Posts shall be located along the length of the bridge at typical 6'-3" or 3'-1½" spaces. Utilize the Modified Post Spacing at Intermediate Deck Joints Details as required to clear deck joints. Establish post spacing along the bridge and Roadway Guardrail Transition beginning with the Key Post. The variable post spacings located near begin and end bridge may be utilized to optimize the typical post spacing. Variable lengths of guardrail overlap are also permitted to optimize the typical post spacing. Symmetry of post spacing is not necessary.

THRIE-BEAM EXPANSION SECTION: Thrie-Beam Expansion Sections shall be installed at locations shown in the Plans. Install nuts for splice bolts finger-tight at 2½" slots in thrie beam expansion sections. Nuts shall fully engage bolts with a minimum of one bolt thread extending beyond the nuts. Distort the first thread on the outside of the nut to prevent loosening. Tighten guardrail bolts in 3¾" slots at guardrail post(s) that lie between the slotted expansion splice and bridge deck joint so that the bolt heads are in full contact with thrie-beam elements, but not so tight as to impede movement due to expansion.

NEOPRENE PADS: Neoprene pads must be plain pads with a durometer hardness of 60 or 70 and meet the requirements of Specification Section 932, except that testing of the finished pad will not be required.

ELEVATION MARKERS: Elevation Markers shall be placed on the top surface of the end bents as directed by the Engineer when portions of the existing traffic railing carrying existing elevation markers are removed. Markers are to be furnished by the Florida Department of Transportation and installed by the Contractor. The Department will determine the vertical Datum information for the marker.

REFLECTIVE RAILING MARKERS: Reflective Railing Markers shall conform to Section 993 of the Specifications. Install markers at the top of the guardrail posts at the spacings shown in the table below. Reflector color (white or yellow) shall conform to the color of the near edgeline.

PEDESTRIAN SAFETY TREATMENTS: Pedestrian Safety Treatment is required when called for in the Plans. See Index No. 400 for details.

BRIDGE NAME PLATE: If a portion of the existing Traffic Railing is to be removed that carries the bridge name, number and or date, or if the installation of the Traffic Railing (Thrie Beam Retrofit) will obscure the bridge name, number and or date, then replace the information that has been removed or obscured, with 3" tall black lettering on white nonreflective sheeting applied to the top of the adjacent guardrail. The information must be clearly visible from the right side of the approaching travel lane. The sheeting and adhesive backing shall comply with Specification Section 994 and may comprise of individual decals of letters and numbers.

PAYMENT: Payment will be made under Metal Traffic Railing (Thrie-Beam Retrofit) which shall include all materials and labor required to fabricate and install the barrier and lapped guardrail where necessary to maintain post spacing. Transition Blocks and Curbs, Bridge Name Plate, Reflective Railing Markers and installation of Elevation Markers, where required, will not be paid for directly but shall be considered as incidental work.

REFLECTIVE RAILING MARKER SPACING

Distance – Edge of Travel Lane to Face of Railing	Spacing (Ft.)
< 4'	40'
4' to 8'	80'
> than 8'	None Required

6/28/2012 2:02:29 PM rd960rh C:\d\projects\standards\structures\2013book\00470-1of3.dgn

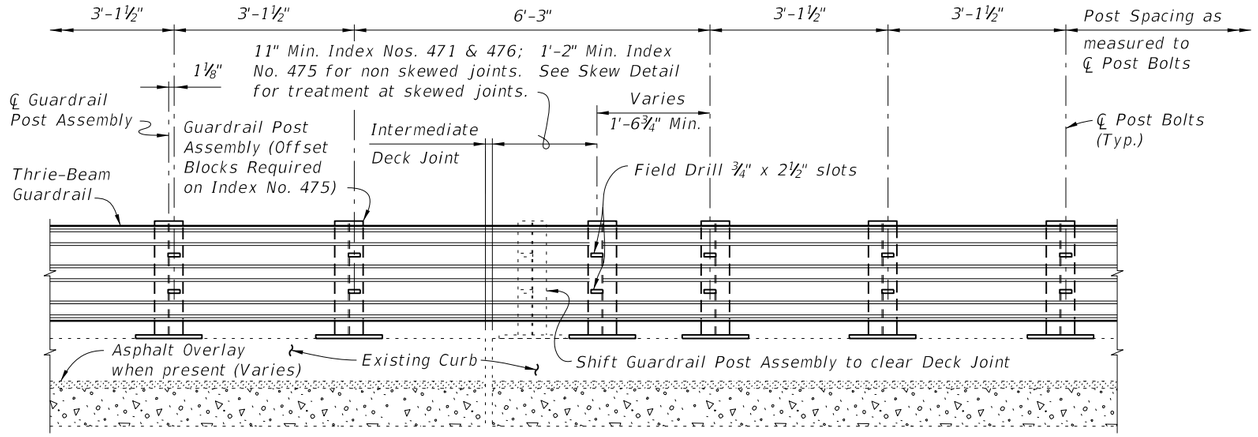

PARTIAL ELEVATION OF INSIDE FACE OF RAILING
MODIFIED POST SPACING AT INTERMEDIATE DECK JOINTS DETAIL FOR INDEX NOS. 471, 475 & 476

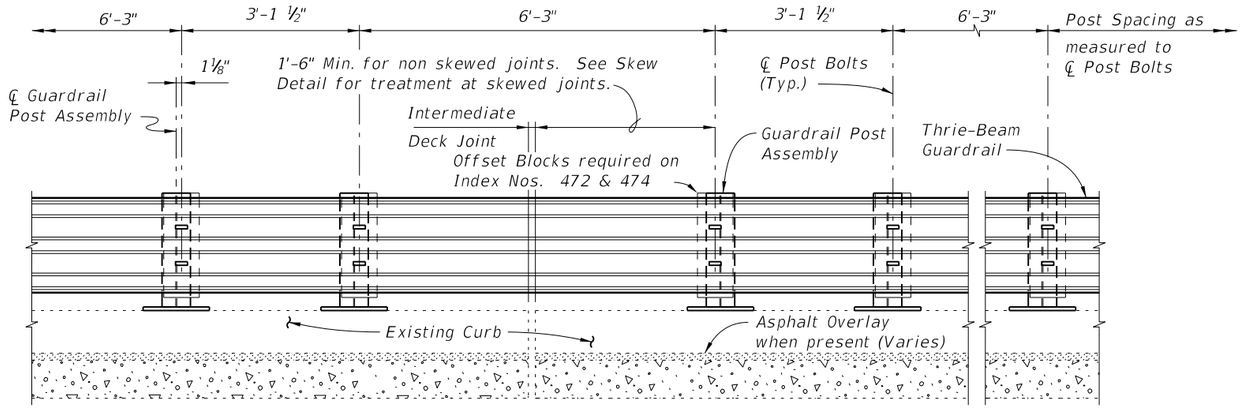

PARTIAL ELEVATION OF INSIDE FACE OF RAILING
MODIFIED POST SPACING AT INTERMEDIATE DECK JOINTS DETAIL FOR INDEX NOS. 472, 473 & 474

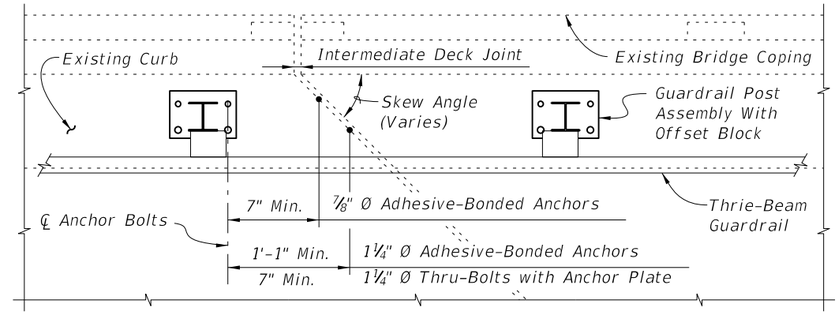

PARTIAL PLAN
INTERMEDIATE JOINT SKEW DETAIL

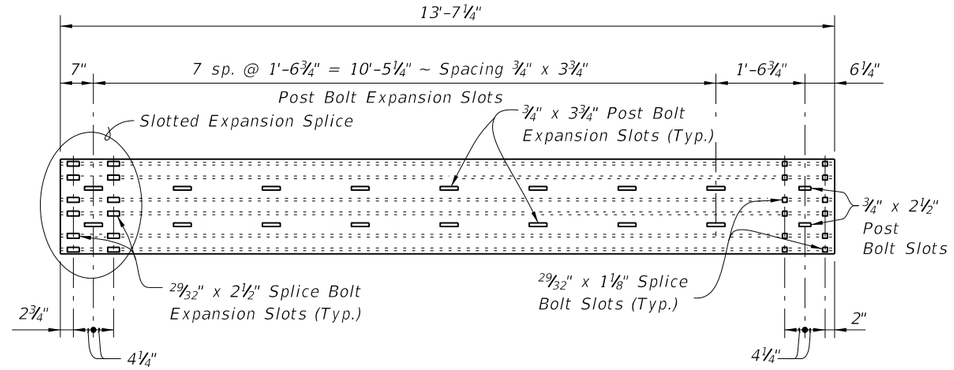

THRIE-BEAM EXPANSION SECTION

6/28/2012 2:02:32 PM rd960rh C:\d\projects\standards\structures\2013book\00470-2of3.dgn

LAST REVISION	REVISION	DESCRIPTION:		FDOT DESIGN STANDARDS 2013	TRAFFIC RAILING - (THRIE-BEAM RETROFIT) GENERAL NOTES & DETAILS	INDEX NO.	SHEET NO.
01/01/08			STATE OF FLORIDA DEPARTMENT OF TRANSPORTATION			470	2

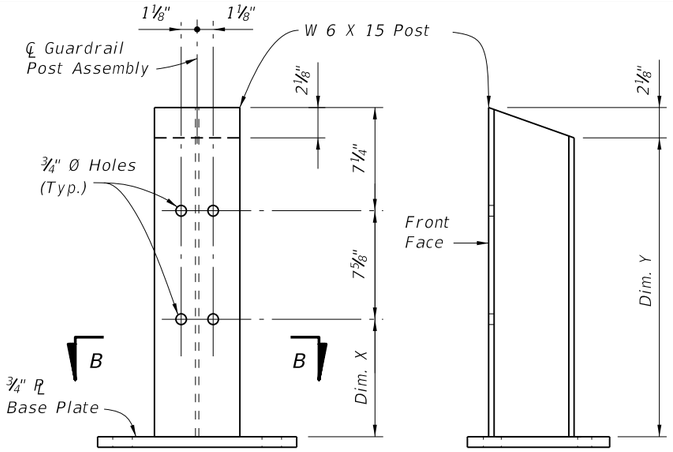

FRONT VIEW SIDE VIEW

POST DIMENSION TABLE			
POST	CURB HEIGHT (DIM. A)	DIM. X	DIM. Y
Post "A"	5" to 7"	11¼"	2'-0"
Post "B"	> 7" to 10"	9¼"	1'-10"
Post "C"	> 10" to 1'-0"	7¼"	1'-8"

Note: Dim. A is equal to the exposed curb height. For location of Dim. A see Index Nos. 471 thru 476, Sheet 1.

GUARDRAIL POST ASSEMBLY DETAIL

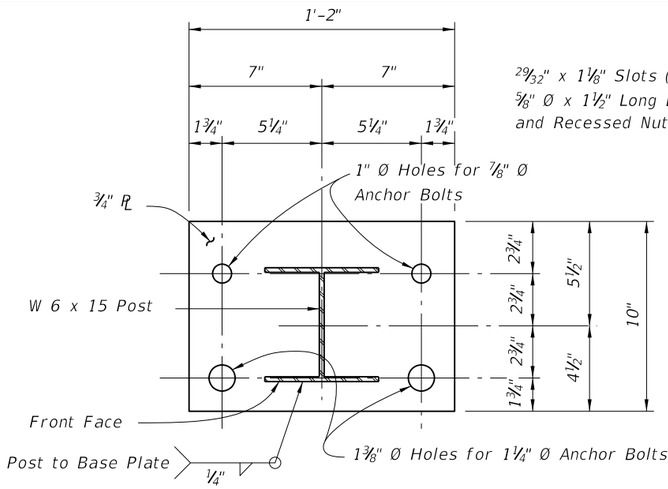

SECTION B-B

THRIE-BEAM GUARDRAIL SPLICE

Note: All Thrie Beam Panels shall be lapped in the direction of adjacent traffic. At the Contractor's option, laps may be extended. Field drill holes in Trailing Thrie Beam Guardrail Panel as required.

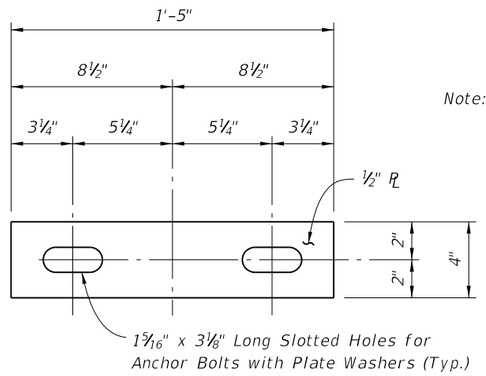

ANCHOR PLATE DETAIL

Note: The Anchor Plate and Plate Washer are applicable only to 1¼" Ø Anchor Bolts that are to be thru-bolted for Index Nos. 471 & 476.

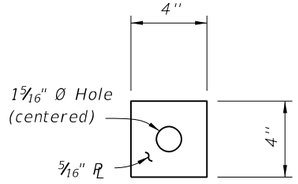

PLATE WASHER DETAIL

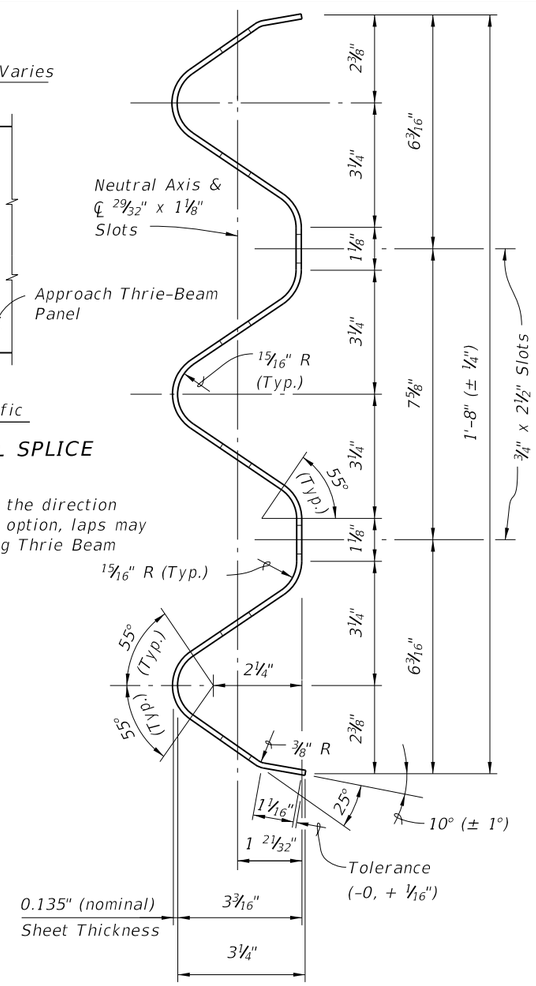

TYPICAL SECTION THRU THRIE-BEAM GUARDRAIL (EXPANSION SECTION SIMILAR)

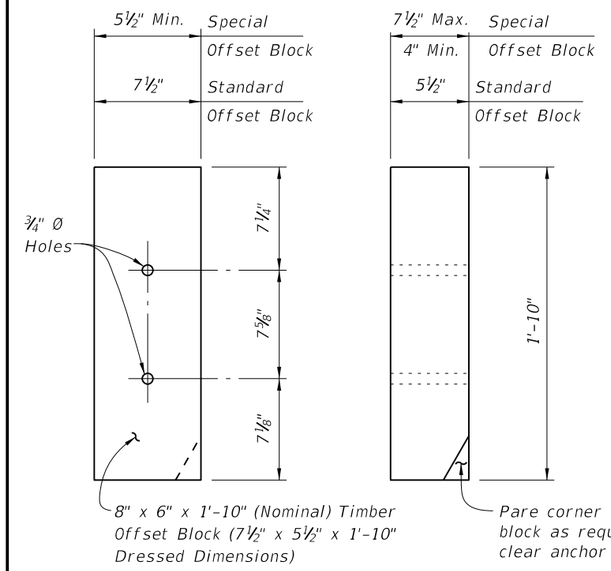

FRONT VIEW SIDE VIEW

OFFSET BLOCK DETAIL

OFFSET BLOCK NOTES:

1. Offset blocks shall be timber or Approved Alternate. Uniformity of block size and alignment of guardrail shall be maintained along length of retrofit.
2. Post bolt holes in offset blocks to be centered (± ¼").
3. Timber offset blocks shall be dressed on all four sides (S4S).
4. Block assemblies for Special Offset Blocks can be made up of 2 or 3 Special or Standard Offset Blocks, field dressed as required.

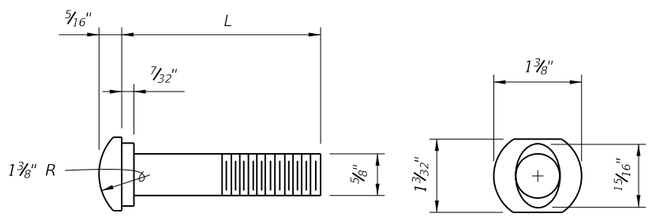

⅝" OVAL SHOULDER BUTTON HEAD BOLT

L	THREAD LENGTH	APPLICATION
1½"	Full Length	Rail Splice Bolt, Post Bolt for Index Nos. 471, 473 & 476
Varies (8" Min.)	4" Min.	Post Bolt for Index Nos. 472, 473, 474, 475 & 476

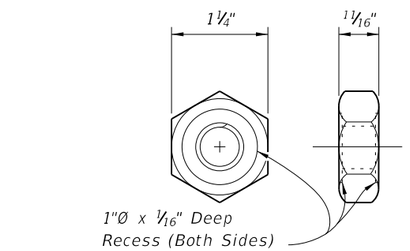

⅝" MODIFIED HEAVY HEX NUT (RECESSED NUT)

6/28/2012 2:02:34 PM rd960rh C:\d\projects\standards\structures\2013book\00470-3of3.dgn

LAST REVISION	REVISION	DESCRIPTION:				
01/01/08			FDOT DESIGN STANDARDS 2013	TRAFFIC RAILING - (THRIE-BEAM RETROFIT) GENERAL NOTES & DETAILS	INDEX NO. 470	SHEET NO. 3

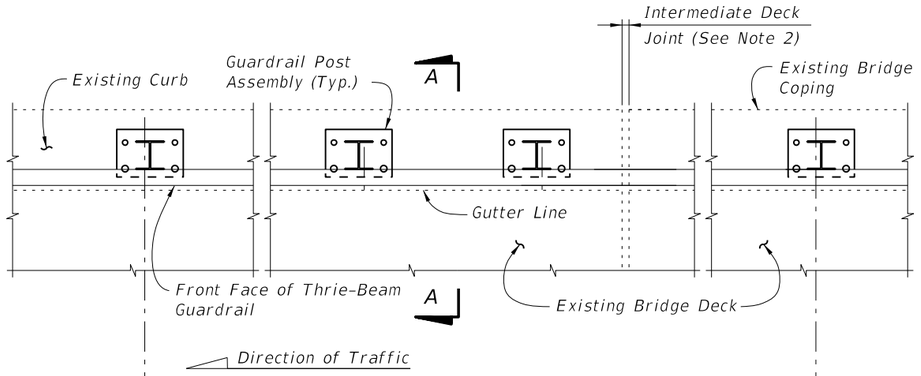

PARTIAL PLAN OF RAILING

℄ Post Bolts and Match Line (Trailing End) (See Sheets 3 and 4)

℄ Post Bolts and Match Line (Approach End) (See Sheets 3 and 4)

3'-1½" spacing (Typ. except as noted along bridge, see Note 2)

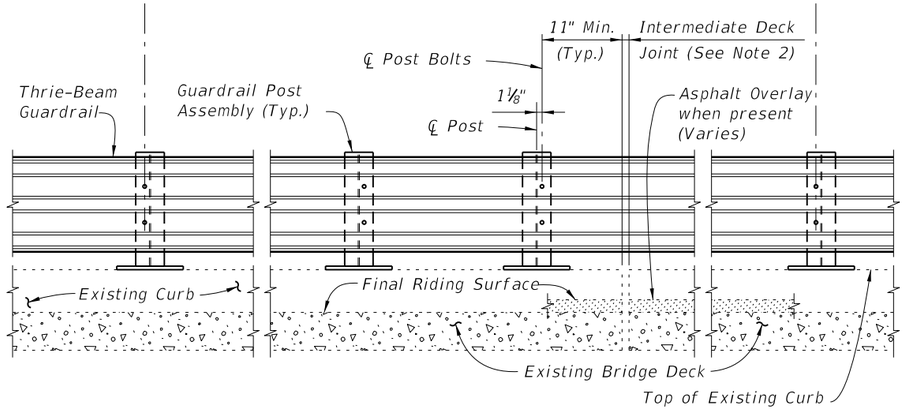

PARTIAL ELEVATION OF INSIDE FACE OF RAILING

TYPICAL TREATMENT OF RAILING ALONG BRIDGE

NOTES:

1. On approach end provide Index No. 402 (as shown) or other site specific treatment, see Roadway Plans. For treatment of trailing end see Roadway Plans.
2. Actual joint dimension and orientation vary. For Intermediate Deck Joints use the Modified Post Spacing at Intermediate Deck Joints Detail, Index No. 470, Sheet 2, as required.
3. Areas where existing structure has been removed shall match adjoining areas and shall be finished flat by grouting or grinding as required. Exposed existing reinforcing steel shall be removed off 1" below existing concrete and grouted over.

CROSS REFERENCES:
For Section A-A see Sheet 2.
For Traffic Railing Notes and Details see Index No. 470.

LAST REVISION	REVISION	DESCRIPTION:		FDOT DESIGN STANDARDS 2013	TRAFFIC RAILING - (THRIE-BEAM RETROFIT) NARROW CURB	INDEX NO.	SHEET NO.
01/01/08						471	1

6/28/2012 2:02:37 PM rd960rh C:\d\projects\standards\structures\2013book\00471-1of4.dgn

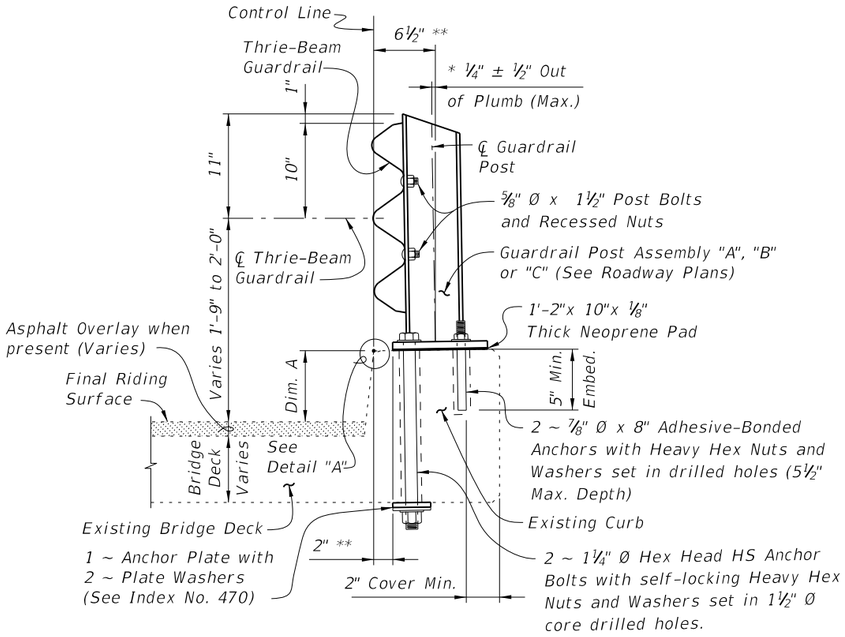

SECTION A-A
TYPICAL SECTION THRU RAILING ON BRIDGE DECK

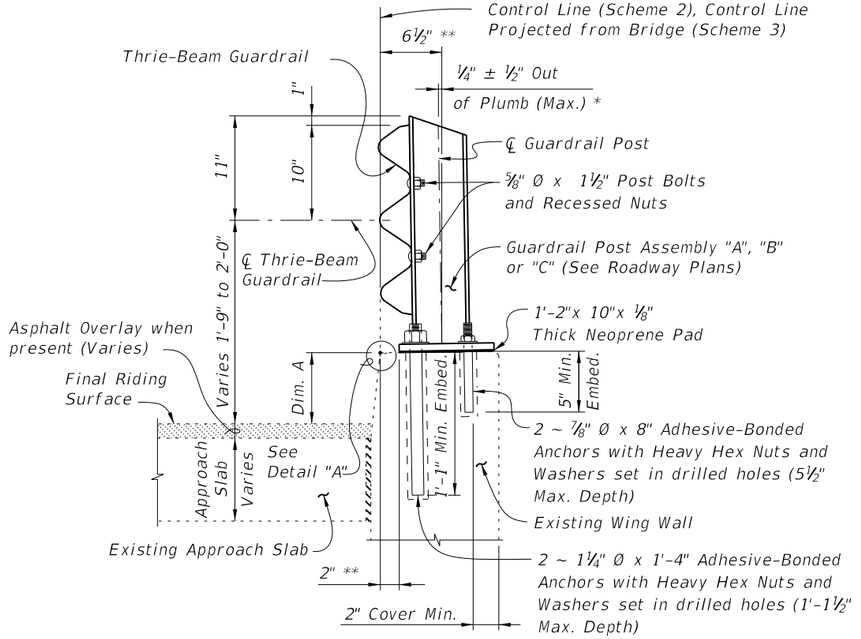

SECTION B-B
TYPICAL SECTION THRU RAILING ALONG APPROACH SLAB
(SCHEME 2 SHOWN, SCHEME 3 SIMILAR)

BILL OF REINFORCING STEEL		
MARK	SIZE	LENGTH
A	4	AS REQUIRED
D	4	1'-11"
L	4	4'-1"

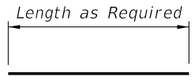

BAR 4A

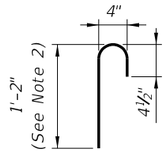

Dowel Bar 4D
(Standard 180° Hook)

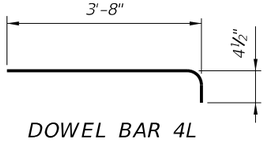

DOWEL BAR 4L

BAR BENDING DIAGRAMS

NOTES:
1. All bar dimensions are out to out.
2. The 1'-2" vertical dimension shown for Bar 4D is based on a curb height of 9". If curb height is less or more than 9", decrease or increase this dimension by an amount equal to the difference in curb height.

* Shim with washers around Anchors as required to maintain tolerance.

** Offset may vary ± 1" for Adhesive-Bonded Anchors to clear existing curb reinforcing and provide minimum edge clearance. Offset shall be consistent along length of bridge.

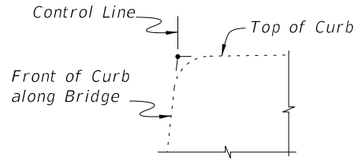

DETAIL "A"

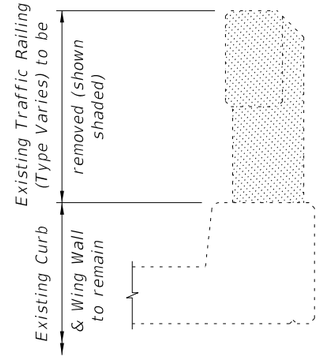

TYPICAL SECTION THRU EXISTING TRAFFIC RAILING SHOWING LIMITS OF REMOVAL (BRIDGE DECK SHOWN, WING WALL SIMILAR)

CROSS REFERENCES:
For location of Section A-A see Sheets 1, 3 & 4.
For location of Section B-B see Sheets 3 & 4.
For application of Dim. A see Post Dimension Table on Index 470, Sheet 3.

C:\d\projects\standards\structures\2013book\00471-2of4.dgn rd960rh 2:02:39 PM 6/28/2012

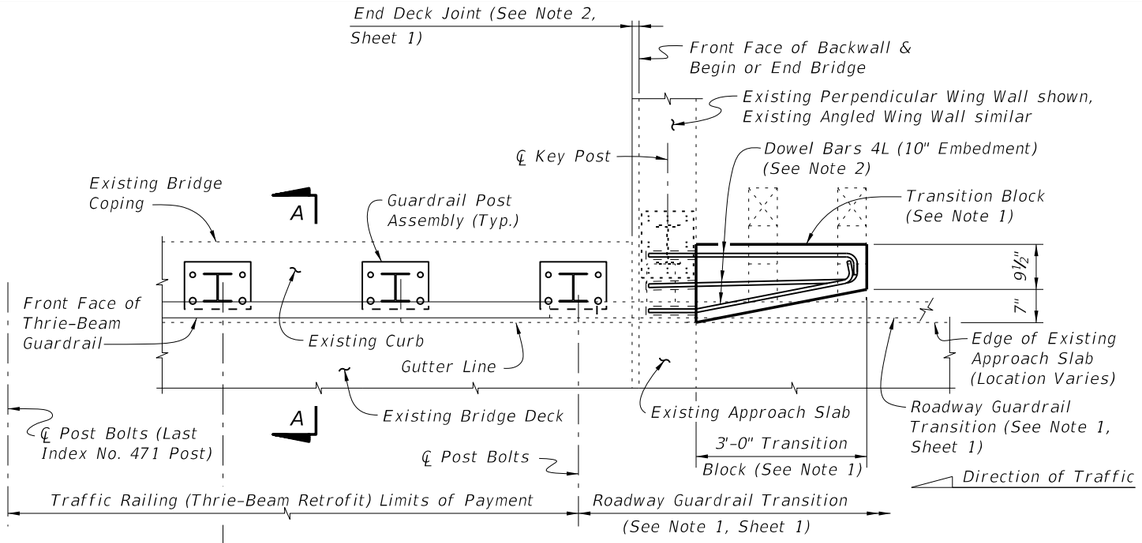

PARTIAL PLAN OF RAILING

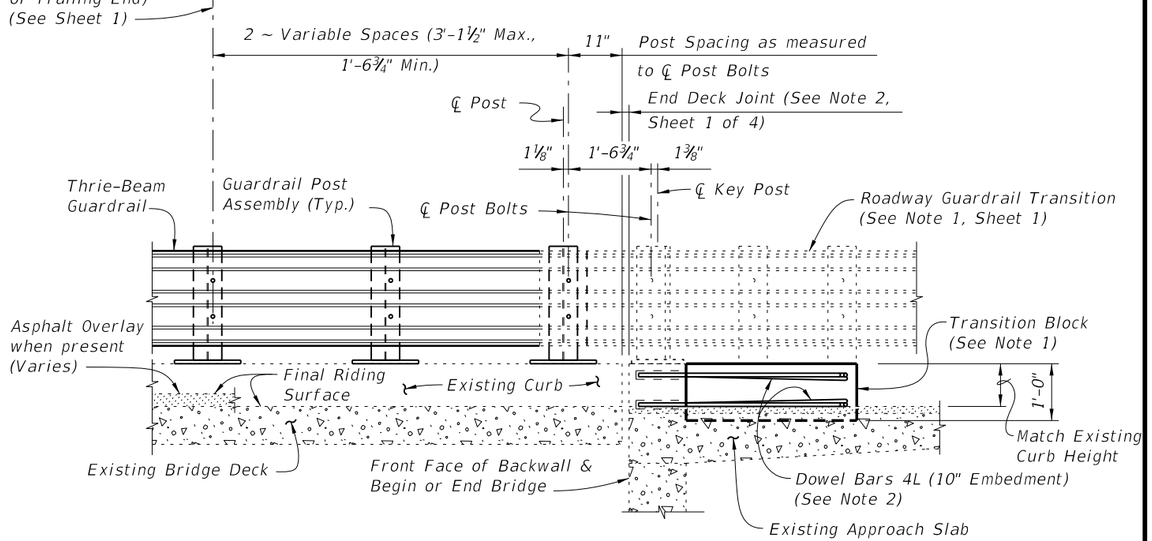

PARTIAL ELEVATION OF INSIDE FACE OF RAILING

SCHEME 1

RAILING END TREATMENT FOR PERPENDICULAR OR ANGLED WING WALLS

SCHEME 1 NOTES:

1. Provide Transition Block (as shown) or Curb if existing Approach Slab does not have a curb, see Roadway Plans. Shape and height of Transition Block or Curb shall match existing bridge curb. Transition Block may be omitted on trailing ends with no opposing traffic.

2. Field bend Dowel Bars 4L within Transition Block as required to maintain 2" top and side clearance and 3" bottom clearance.

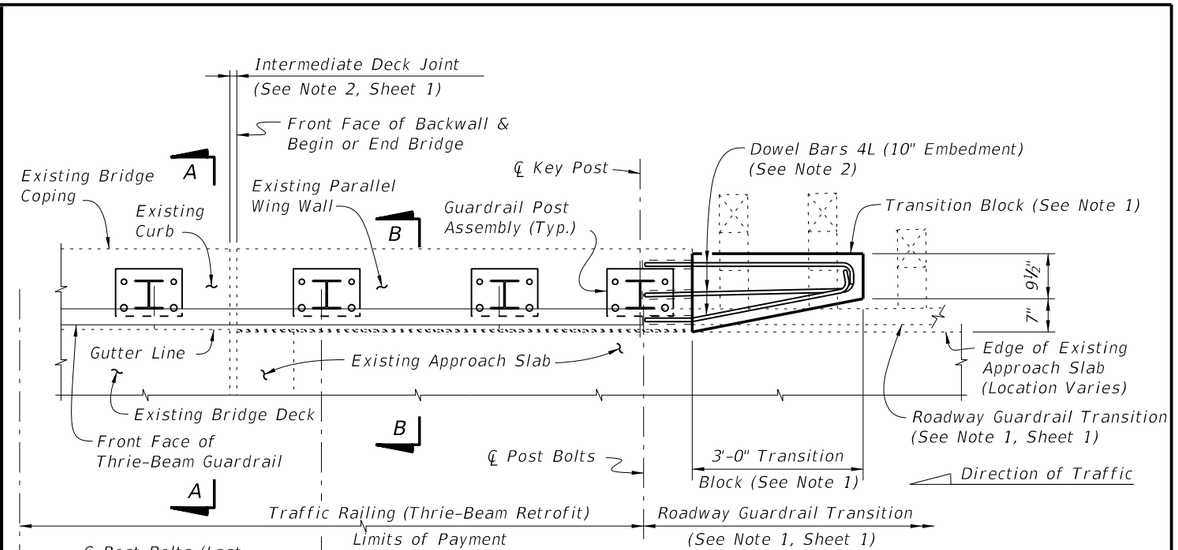

PARTIAL PLAN OF RAILING

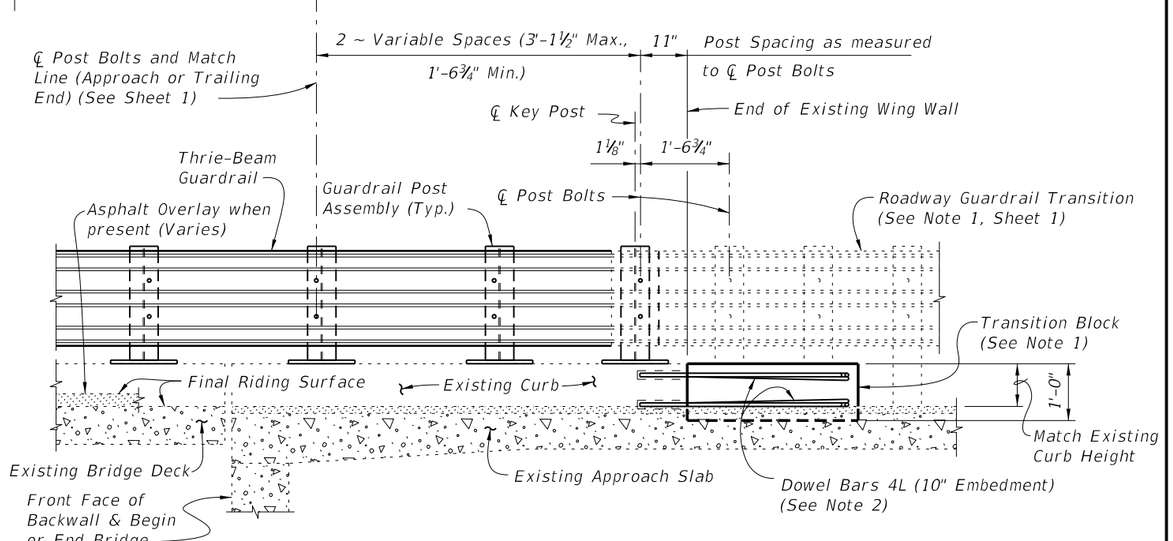

PARTIAL ELEVATION OF INSIDE FACE OF RAILING

SCHEME 2

RAILING END TREATMENT FOR PARALLEL WING WALLS

SCHEME 2 NOTES:

1. Provide Transition Block (as shown) or Curb if existing Approach Slab does not have a curb, see Roadway Plans. Shape and height of Transition Block or Curb shall match existing bridge curb. Transition Block may be omitted on trailing ends with no opposing traffic.

2. Field bend Dowel Bars 4L within Transition Block as required to maintain 2" top and side clearance and 3" bottom clearance.

C:\d\projects\standards\structures\2013book\00471-3of4.dgn
rd960rh
2:02:41 PM
6/28/2012

LAST REVISION	REVISION	DESCRIPTION:	FDOT DESIGN STANDARDS 2013	TRAFFIC RAILING - (THRIE-BEAM RETROFIT) NARROW CURB	INDEX NO.	SHEET NO.
01/01/08					471	3

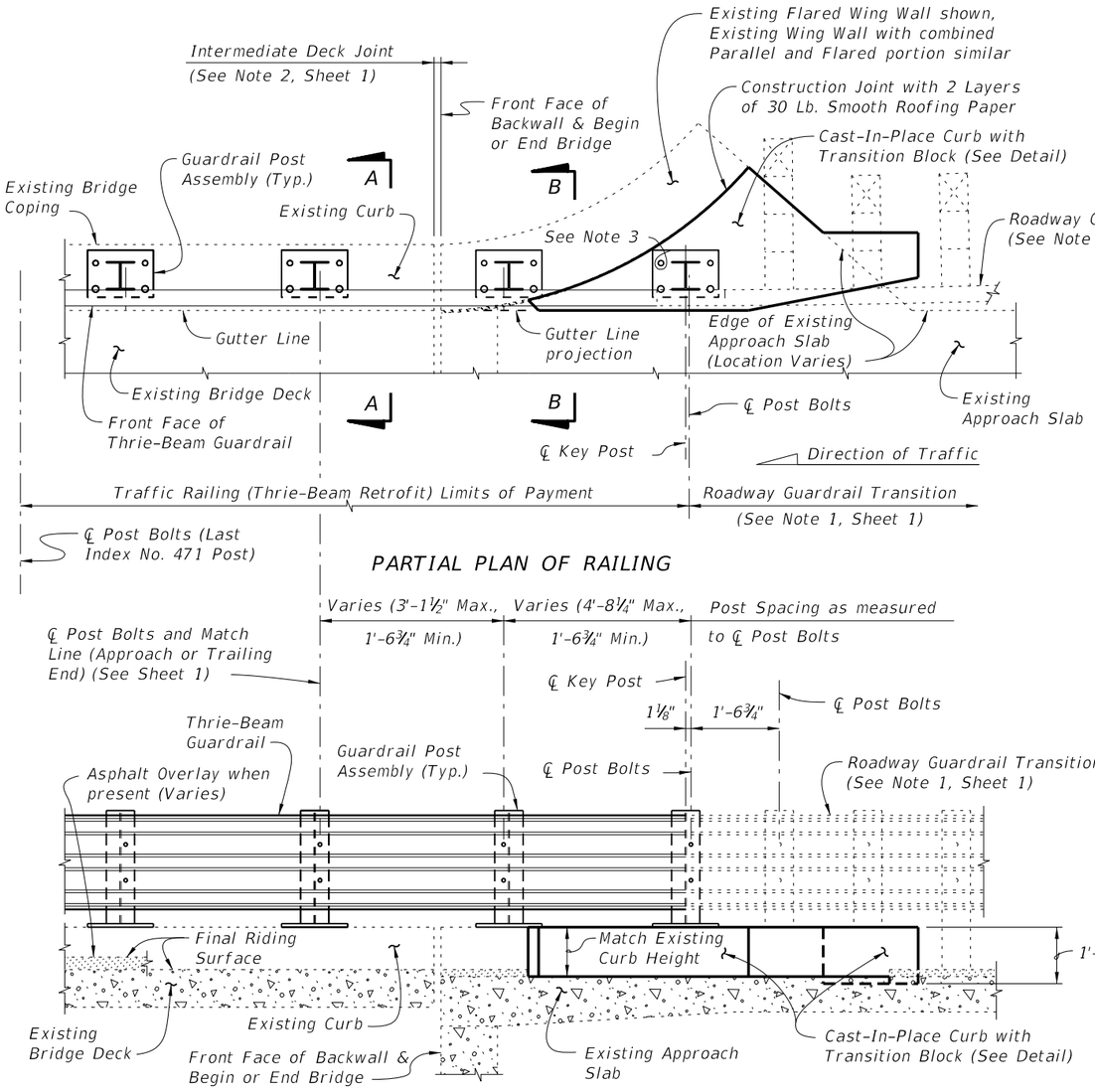

PARTIAL PLAN OF RAILING

PARTIAL ELEVATION OF INSIDE FACE OF RAILING

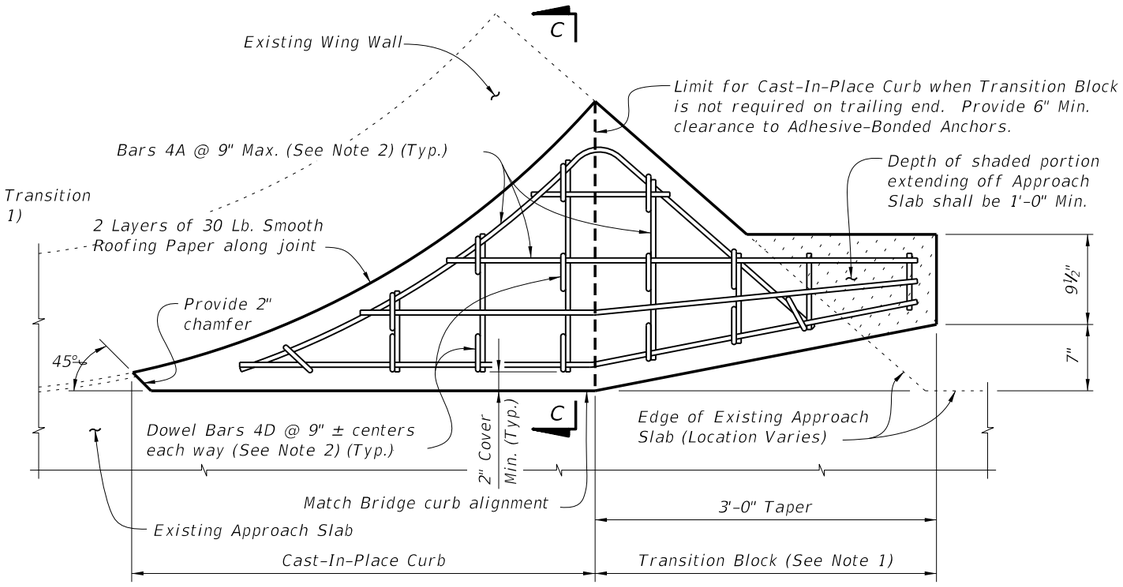

PLAN OF CAST-IN-PLACE CURB & TRANSITION BLOCK DETAIL
(Approach End with Transition Block Shown, Trailing End without Transition Block Similar)

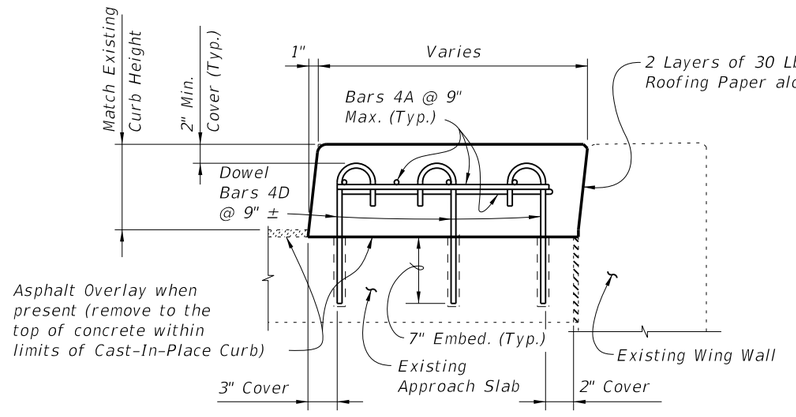

SECTION C-C

SCHEME 3

RAILING END TREATMENT FOR FLARED WING WALLS

SCHEME 3 NOTES:

1. Provide Cast-In-Place Curb as shown. Shape and height of Transition Block and Curb shall match existing bridge curb. Transition Block may be omitted on trailing ends with no opposing traffic.

2. Field cut and bend Bars 4A and rotate Dowel Bars 4B within Curb and Transition Block as required to maintain 2" top and side clearance and 3" bottom clearance.

3. A single ⅞" Ø x 8" Adhesive-Bonded Anchor may be omitted as shown when 2" clear cover cannot be provided.

C:\d*projects*standards*structures*2013book*00471-4of4.dgn rd960rh 2:02:44 PM 6/28/2012

LAST REVISION	REVISION	DESCRIPTION:				
01/01/08			FDOT DESIGN STANDARDS 2013	TRAFFIC RAILING - (THRIE-BEAM RETROFIT) NARROW CURB	INDEX NO. 471	SHEET NO. 4

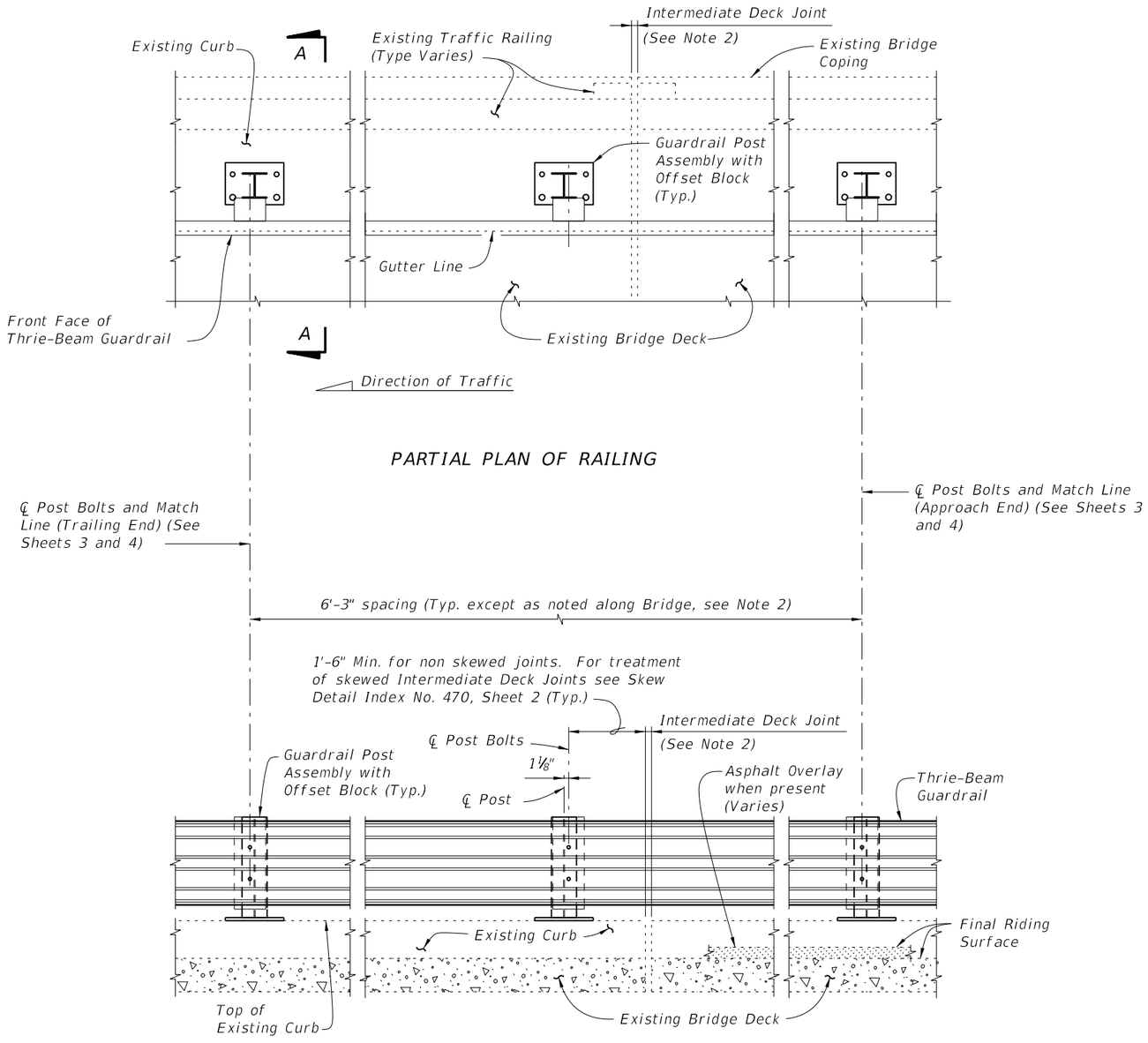

PARTIAL ELEVATION OF INSIDE FACE OF RAILING
(Existing Traffic Railing not shown for clarity)

TYPICAL TREATMENT OF RAILING ALONG BRIDGE

NOTES:

1. On approach end provide Index No. 402 (as shown) or other site specific treatment, see Roadway Plans. For treatment of trailing end see Roadway Plans.
2. Actual joint dimension and orientation vary. For Intermediate Deck Joints use the Modified Post Spacing at Intermediate Deck Joints Detail, Index No. 470, Sheet 2, as required.
3. Areas where existing structure has been removed shall match adjoining areas and shall be finished flat by grouting or grinding as required. Exposed existing reinforcing steel shall be burned off 1" below existing concrete and grouted over.

CROSS REFERENCES:
For Section A-A see Sheet 2.
For Traffic Railing Notes and Details
see Index No. 470.

C:\d\projects\standards\structures\2013book\00472-1of4.dgn
rd960rh
2:02:46 PM
6/28/2012

LAST REVISION	REVISION	DESCRIPTION:		FDOT DESIGN STANDARDS 2013	TRAFFIC RAILING - (THRIE-BEAM RETROFIT) WIDE STRONG CURB TYPE 1	INDEX NO.	SHEET NO.
01/01/08						472	1

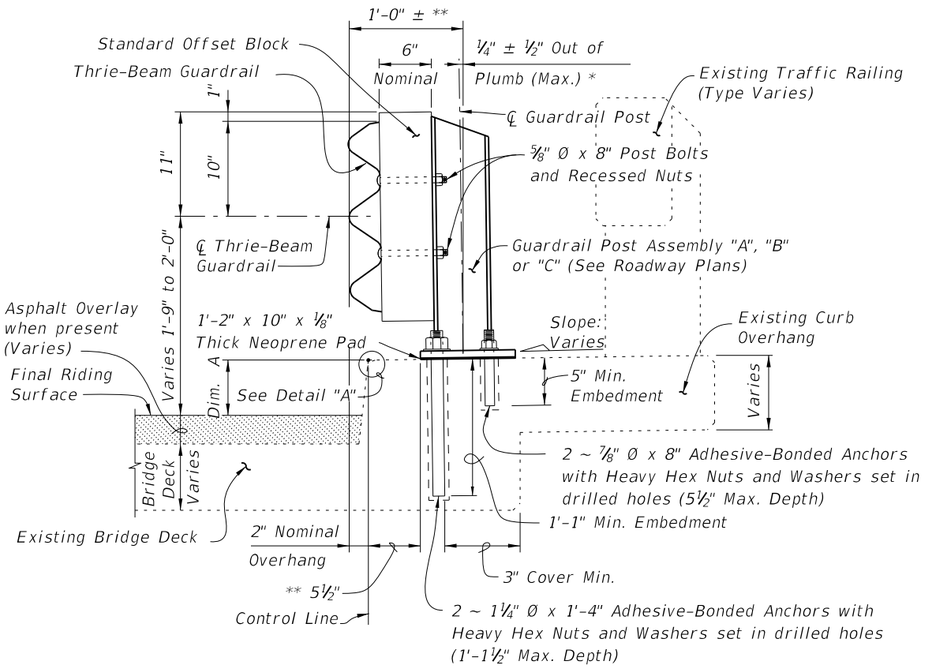

SECTION A-A
TYPICAL SECTION THRU RAILING ON BRIDGE DECK

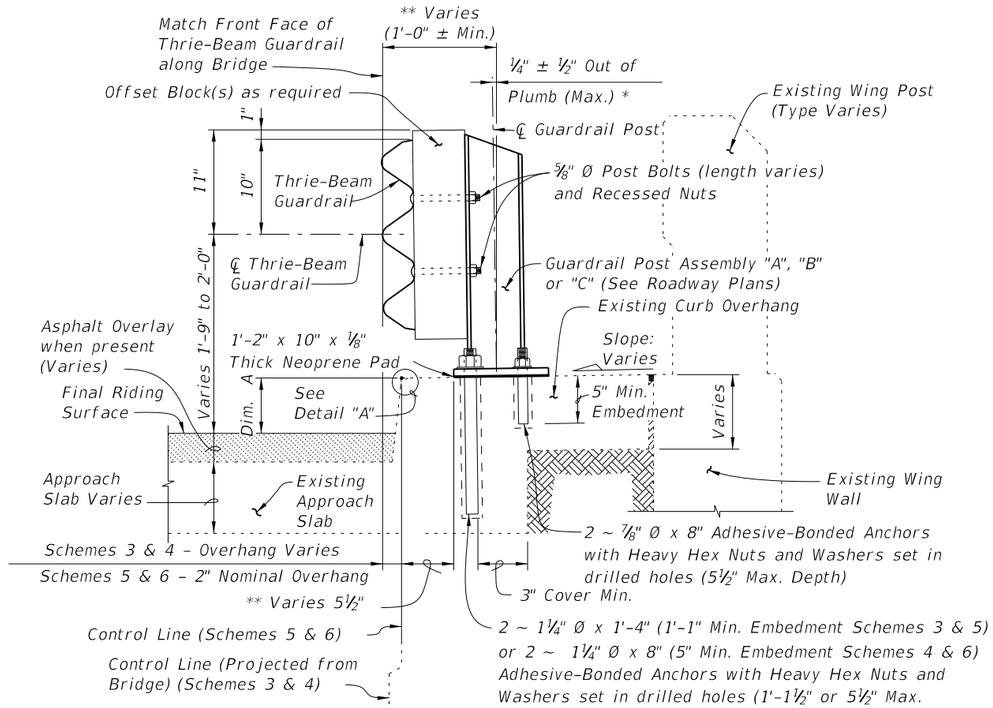

SECTION B-B
TYPICAL SECTION THRU RAILING ALONG APPROACH SLAB
(SCHEMES 5 AND 6 SHOWN, SCHEMES 3 AND 4 SIMILAR)

BILL OF REINFORCING STEEL		
MARK	SIZE	LENGTH
D	4	3'-7"
L	4	4'-1"
M	4	2'-8"

BAR BENDING DIAGRAMS

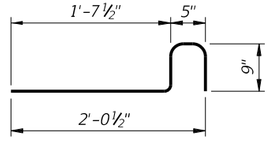

DOWEL BAR 4D

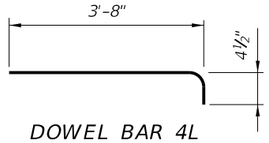

DOWEL BAR 4L

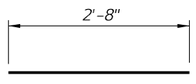

BAR 4M

NOTE: All bar dimensions are out to out.

* Shim with washers around Anchors as required to maintain tolerance.

** Offset may vary ± 1" for Adhesive-Bonded Anchors to clear existing curb reinforcing and provide minimum edge clearance. Offset shall be consistent along length of bridge.

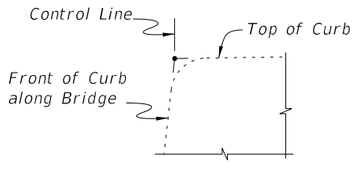

DETAIL "A"

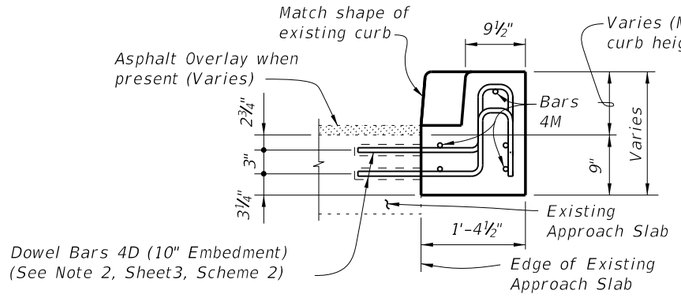

VIEW C-C

CROSS REFERENCES:
For location of Section A-A see Sheets 1, 3 & 4.
For location of Section B-B see Sheet 4.
For location of View C-C see Sheet 3.
For application of Dim. A see Post Dimension Table on Index 470, Sheet 3.

C:\d\projects\standards\structures\2013book\00472-2of4.dgn
rd960rh
2:02:49 PM
6/28/2012

LAST REVISION	REVISION	DESCRIPTION:				
07/01/08			FDOT DESIGN STANDARDS 2013	TRAFFIC RAILING - (THRIE-BEAM RETROFIT) WIDE STRONG CURB TYPE 1	INDEX NO. 472	SHEET NO. 2

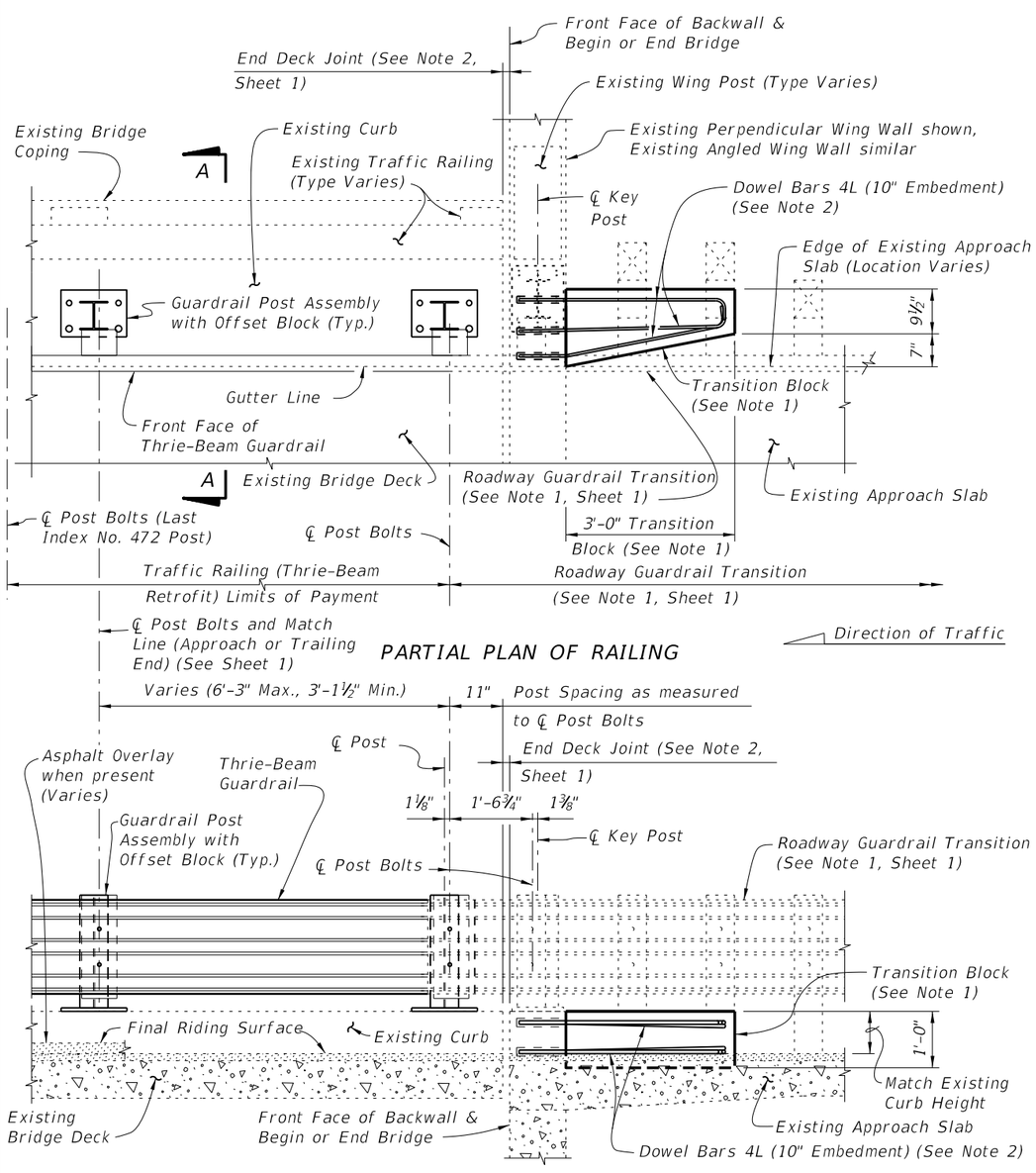

PARTIAL PLAN OF RAILING

PARTIAL ELEVATION OF INSIDE FACE OF RAILING
(Existing Wing Post and Traffic Railing not shown for clarity)

SCHEME 1

RAILING END TREATMENT FOR PERPENDICULAR OR ANGLED WING WALLS

SCHEME 1 NOTES:

1. Provide Transition Block (as shown) or Curb if existing Approach Slab does not have a curb, see Roadway Plans. Shape and height of Transition Block or Curb shall match existing bridge curb. Transition Block may be omitted on trailing ends with no opposing traffic.

2. Field bend Dowel Bars 4L within Transition Block as required to maintain 2" top and side clearance and 3" bottom clearance.

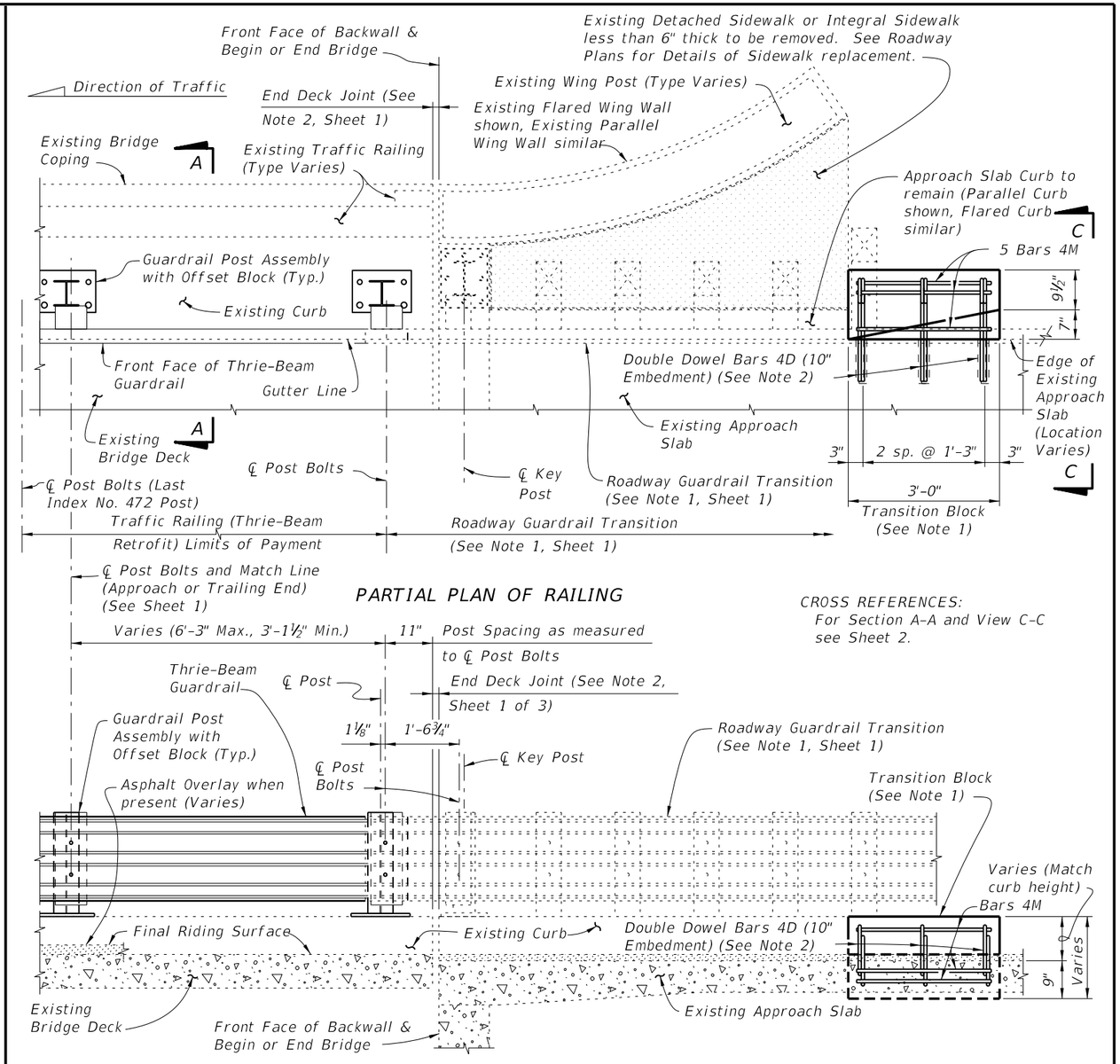

PARTIAL PLAN OF RAILING

CROSS REFERENCES:
For Section A-A and View C-C see Sheet 2.

PARTIAL ELEVATION OF INSIDE FACE OF RAILING
(Existing Wing Post and Traffic Railing not shown for clarity)

SCHEME 2

RAILING END TREATMENT FOR PARALLEL OR FLARED CURBS WITH DETACHED SIDEWALKS OR INTEGRAL SIDEWALKS LESS THAN 6" THICK

SCHEME 2 NOTES:

1. Provide Transition Block (as shown) or Curb if existing Approach Slab Curb does not extend to end of Approach Slab. Shape and height of Transition Block or Curb shall match existing bridge curb. Transition Block may be omitted on trailing ends with no opposing traffic and on bridges with flared Approach Slab Curbs.

2. Field bend or tilt Dowel Bars 4D and Bars 4M within Transition Block as required to maintain 2" top and side clearance and 3" bottom clearance.

C:\d\projects\standards\structures\2013book\00472-3of4.dgn
rd960rh
2:02:51 PM
6/28/2012

LAST REVISION	REVISION	DESCRIPTION:			INDEX NO.	SHEET NO.
01/01/08			FDOT DESIGN STANDARDS 2013	TRAFFIC RAILING - (THRIE-BEAM RETROFIT) WIDE STRONG CURB TYPE 1	472	3

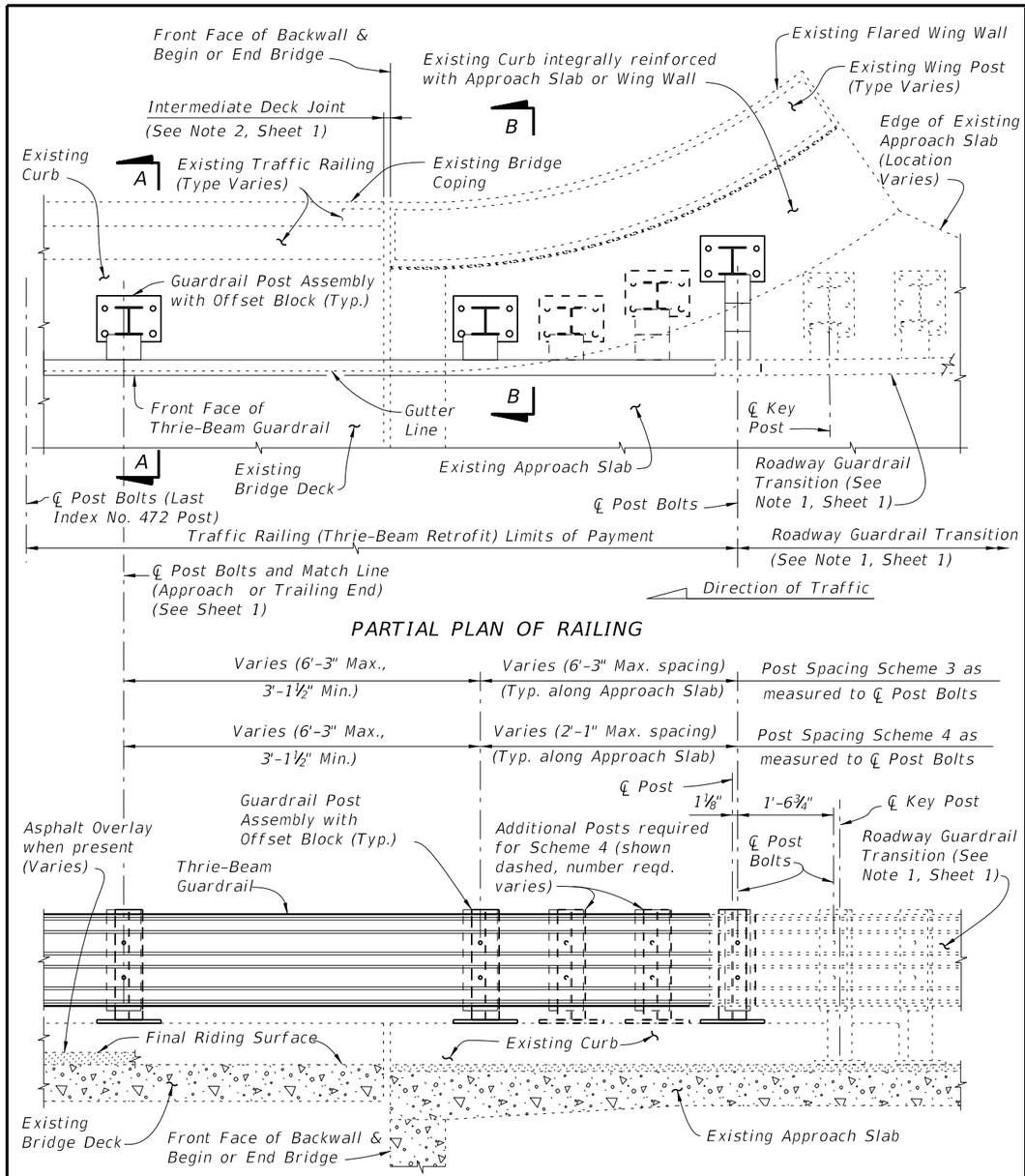

PARTIAL ELEVATION OF INSIDE FACE OF RAILING
(Existing Wing Post and Traffic Railing not shown for clarity)

SCHEMES 3 AND 4
RAILING END TREATMENT FOR FLARED INTEGRAL CURBS

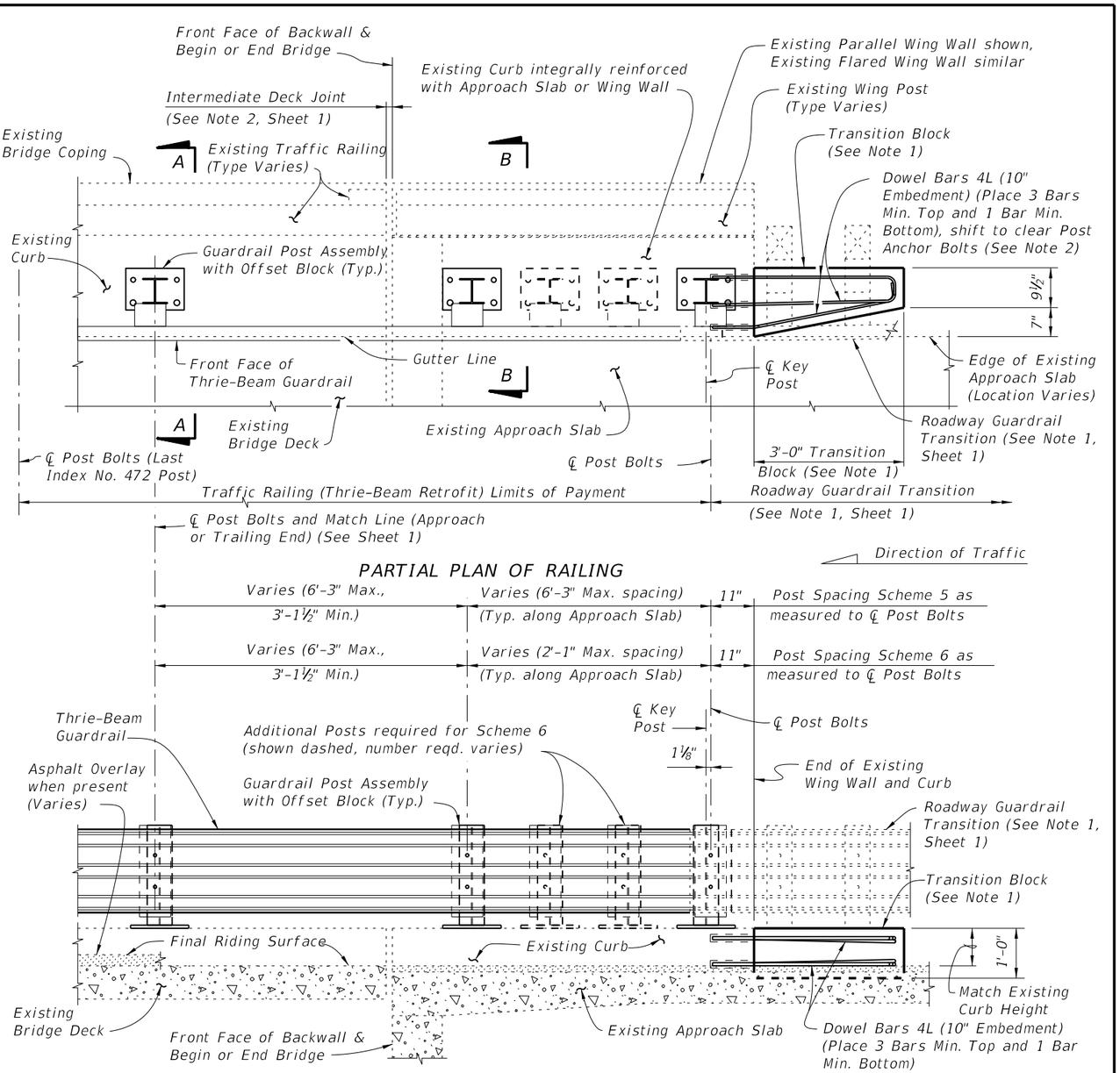

PARTIAL ELEVATION OF INSIDE FACE OF RAILING
(Existing Wing Post and Traffic Railing not shown for clarity)

SCHEMES 5 AND 6
RAILING END TREATMENT FOR PARALLEL INTEGRAL CURBS

SCHEMES 5 AND 6 NOTES:

1. *Provide Transition Block (as shown) or Curb if existing Approach Slab Curb does not extend to end of Approach Slab. Shape and height of Transition Block or Curb shall match existing bridge curb. Transition Block may be omitted on trailing ends with no opposing traffic.*

2. *Field bend Dowel Bars 4L within Transition Block as required to maintain 2" top and side clearance and 3" bottom clearance.*

C:\d\projects\standards\structures\2013book\00472-4of4.dgn
rd960rh
2:02:54 PM
6/28/2012

LAST REVISION	REVISION	DESCRIPTION:		FDOT DESIGN STANDARDS 2013	TRAFFIC RAILING - (THRIE-BEAM RETROFIT) WIDE STRONG CURB TYPE 1	INDEX NO.	SHEET NO.
01/01/08						472	4

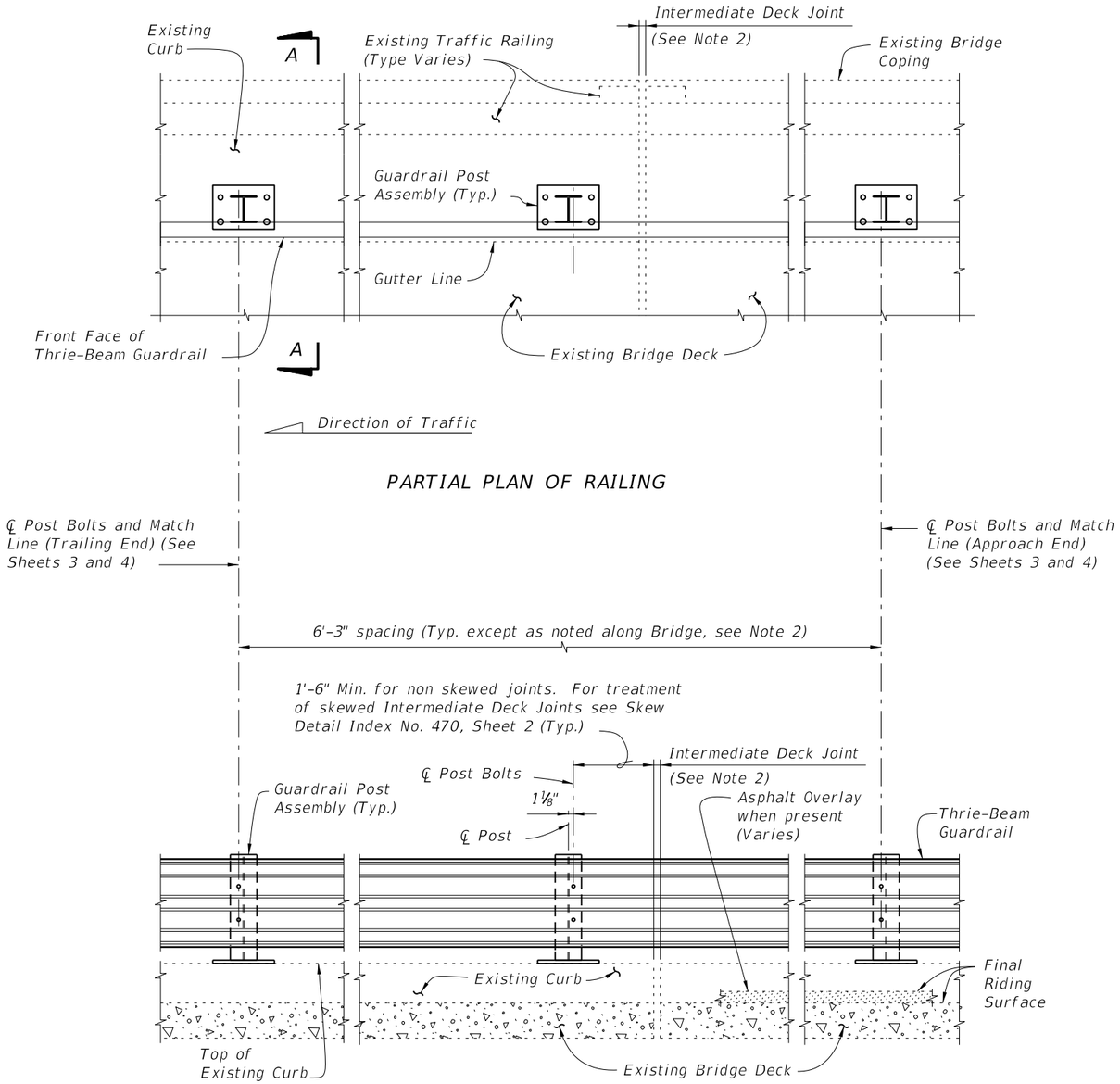

PARTIAL ELEVATION OF INSIDE FACE OF RAILING
(Existing Traffic Railing not shown for clarity)

TYPICAL TREATMENT OF RAILING ALONG BRIDGE

NOTES:

1. On approach end provide Index No. 402 (as shown) or other site specific treatment, see Roadway Plans. For treatment of trailing end see Roadway Plans.
2. Actual joint dimension and orientation vary. For Intermediate Deck Joints use the Modified Post Spacing at Intermediate Deck Joints Detail, Index No. 470, Sheet 2, as required.
3. Areas where existing structure has been removed shall match adjoining areas and shall be finished flat by grouting or grinding as required. Exposed existing reinforcing steel shall be burned off 1" below existing concrete and grouted over.

CROSS REFERENCES:
For Section A-A see Sheet 2.
For Traffic Railing Notes and Details see Index No. 470.

C:\d\projects\standards\structures\2013book\00473-1of4.dgn rd960rh 2:02:56 PM 6/28/2012

LAST REVISION	REVISION	DESCRIPTION:			INDEX NO.	SHEET NO.
01/01/08			FDOT DESIGN STANDARDS 2013	TRAFFIC RAILING - (THRIE-BEAM RETROFIT) WIDE STRONG CURB TYPE 2	473	1

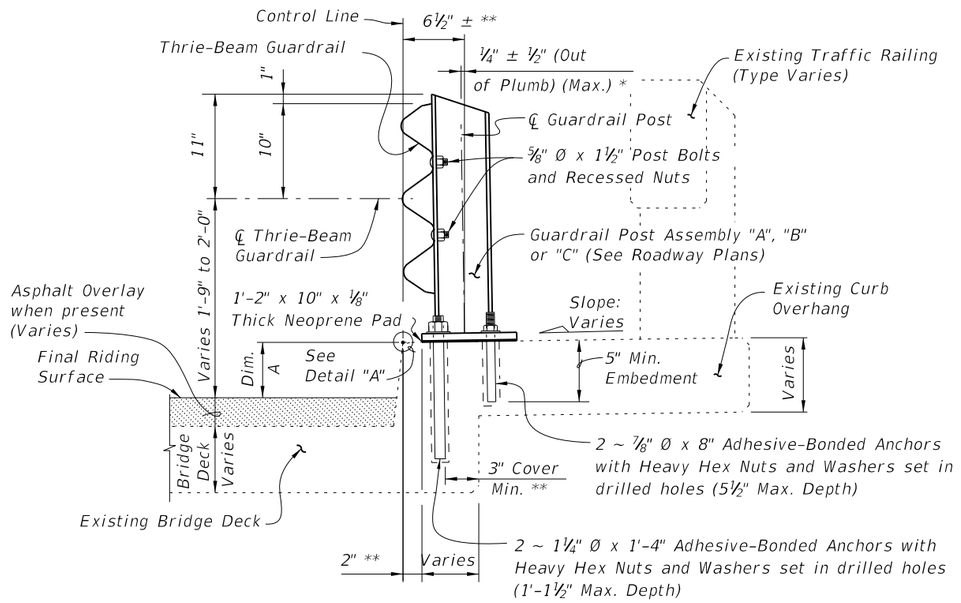

SECTION A-A
TYPICAL SECTION THRU RAILING ON BRIDGE DECK

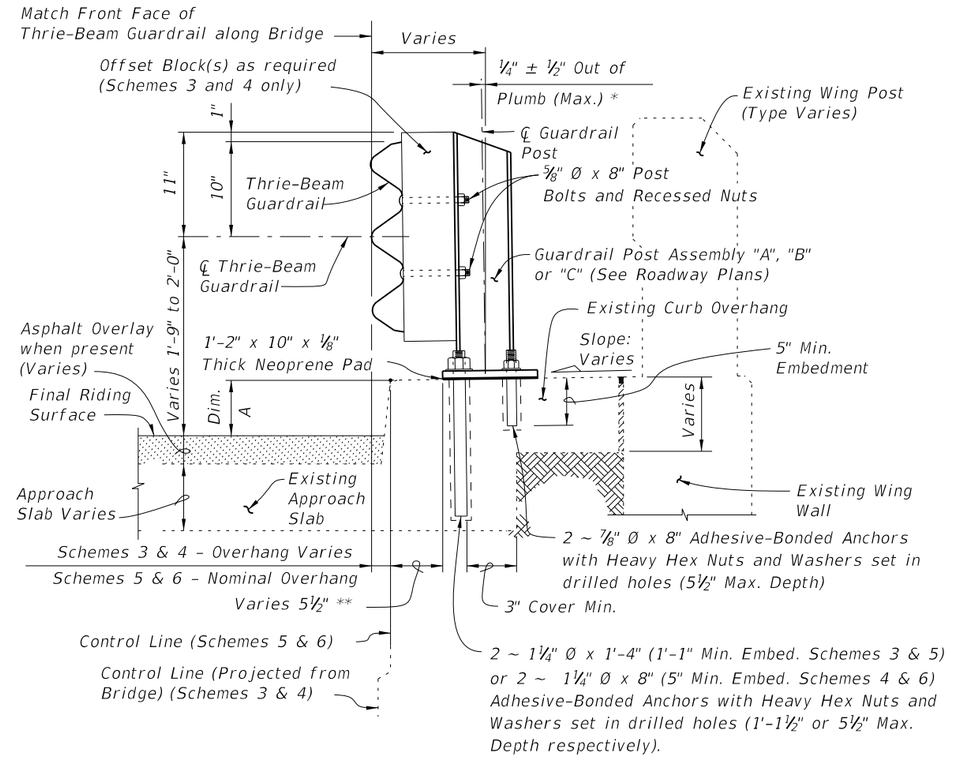

SECTION B-B
TYPICAL SECTION THRU RAILING ALONG APPROACH SLAB
(SCHEMES 5 AND 6 SHOWN, SCHEMES 3 AND 4 SIMILAR)

BILL OF REINFORCING STEEL		
MARK	SIZE	LENGTH
D	4	3'-7"
L	4	4'-1"
M	4	2'-8"

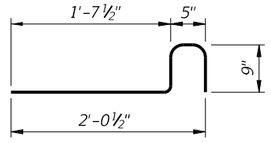

DOWEL BAR 4D

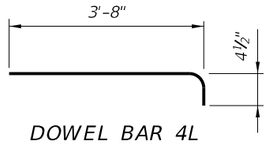

DOWEL BAR 4L

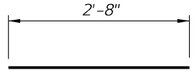

BAR 4M

BAR BENDING DIAGRAMS

NOTE: All bar dimensions are out to out.

* Shim with washers around Anchor Bolts and Anchors as required to maintain tolerance.

** Offset may vary ± 1" for Adhesive-Bonded Anchors and Anchor Bolts to clear existing curb reinforcing and provide minimum edge clearance. Offset shall be consistent along length of bridge.

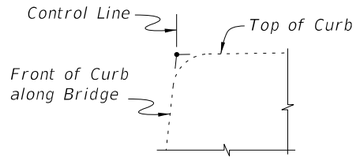

DETAIL "A"

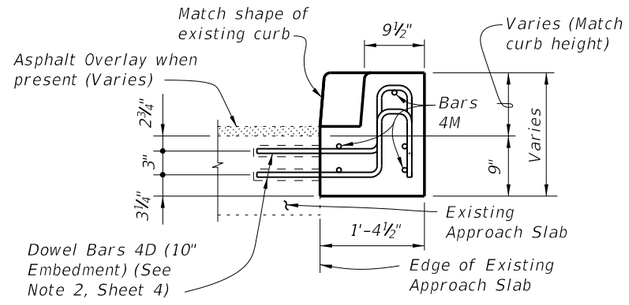

VIEW C-C

CROSS REFERENCES:
For location of Section A-A see Sheet 1, 3 and 4.
For location of Section B-B see Sheet 4.
For location of View C-C see Sheet 3.
For Traffic Railing Notes and Details see Index No. 470.
For application of Dim. A see Post Dimension Table on Index 470, Sheet 3.

6/28/2012 2:02:59 PM rd960rh C:\fdot projects\standards\structures\2013book\00473-2of4.dgn

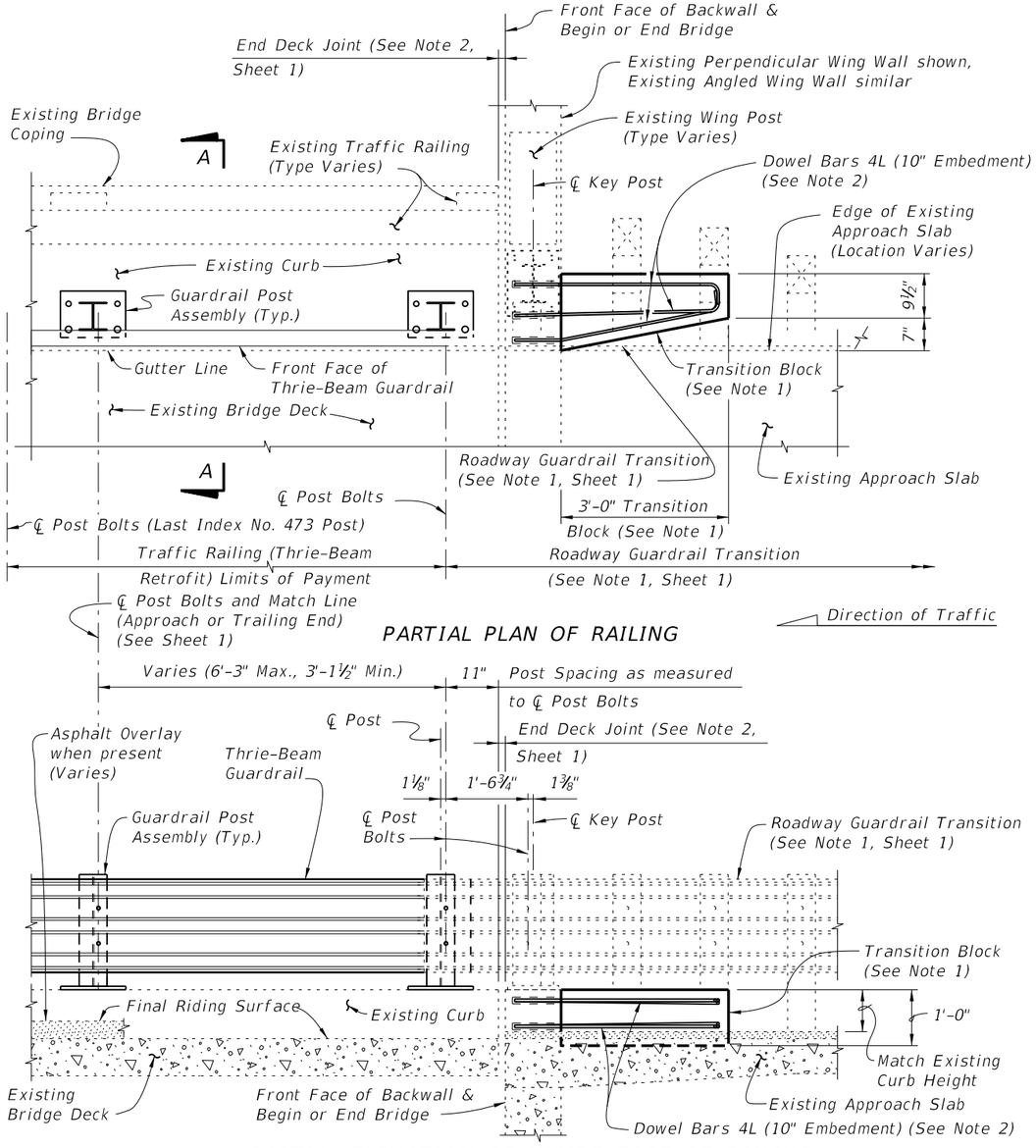

PARTIAL PLAN OF RAILING

PARTIAL ELEVATION OF INSIDE FACE OF RAILING
(Existing Wing Post and Traffic Railing not shown for clarity)

SCHEME 1

RAILING END TREATMENT FOR PERPENDICULAR OR ANGLED WING WALLS

SCHEME 1 NOTES:

1. Provide Transition Block (as shown) or Curb if existing Approach Slab does not have a curb, see Roadway Plans. Shape and height of Transition Block or Curb shall match existing bridge curb. Transition Block may be omitted on trailing ends with no opposing traffic.

2. Field bend Dowel Bars 4L within Transition Block as required to maintain 2" top and side clearance and 3" bottom clearance.

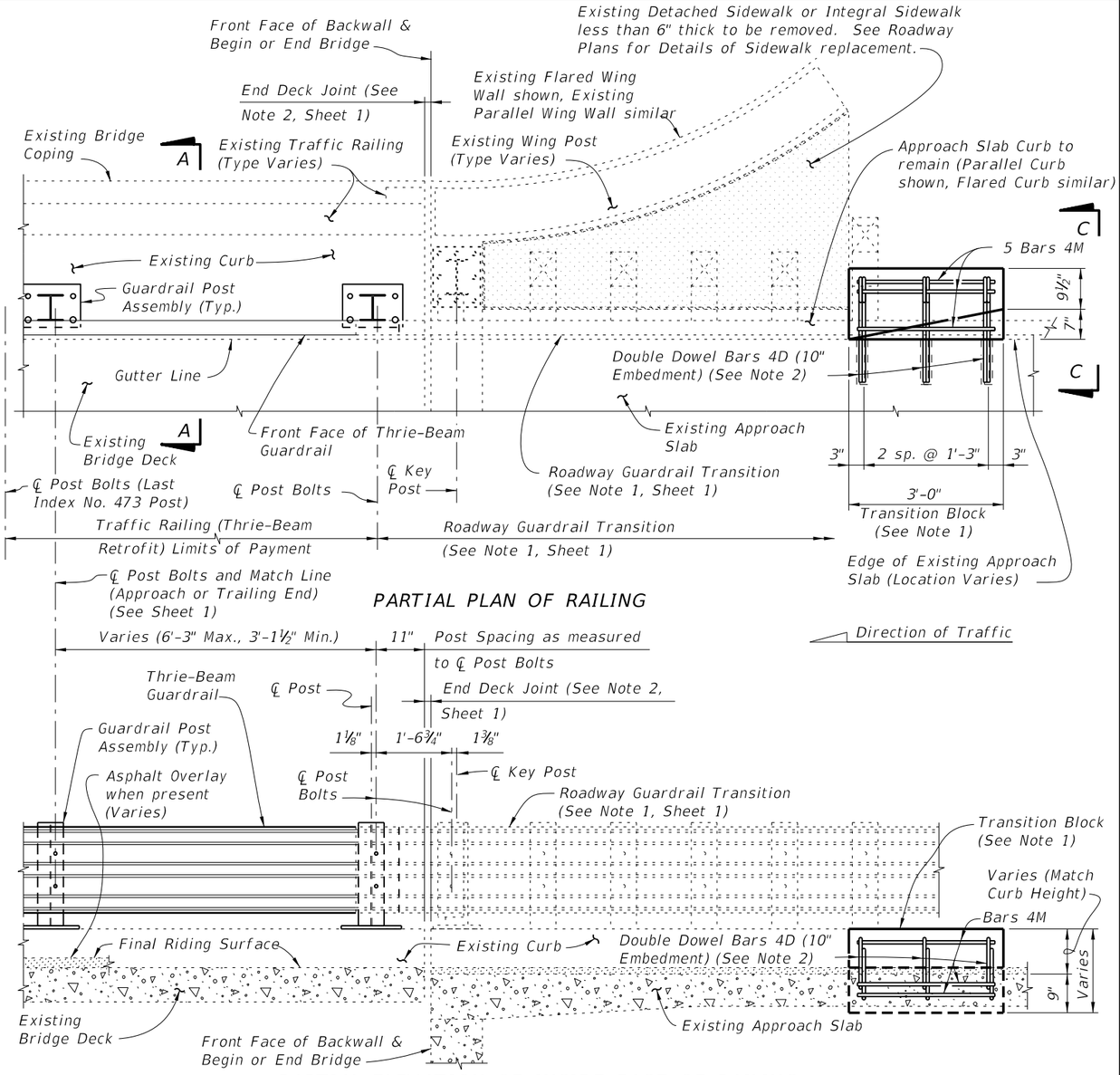

PARTIAL PLAN OF RAILING

PARTIAL ELEVATION OF INSIDE FACE OF RAILING
(Existing Wing Post and Traffic Railing not shown for clarity)

SCHEME 2

RAILING END TREATMENT FOR PARALLEL OR FLARED CURBS WITH DETACHED SIDEWALKS OR INTEGRAL SIDEWALK LESS THAN 6" THICK

SCHEME 2 NOTES:

1. Provide Transition Block (as shown) or Curb if existing Approach Slab Curb does not extend to end of Approach Slab. Shape and height of Transition Block or Curb shall match existing bridge curb. Transition Block may be omitted on trailing ends with no opposing traffic and on bridges with flared Approach Slab Curbs.

2. Field bend or tilt Dowel Bars 4D and Bars 4M within Transition Block as required to maintain 2" top and side clearance and 3" bottom clearance.

C:\d\projects\standards\structures\2013book\00473-3of4.dgn
rd960rh
2:03:04 PM
6/28/2012

LAST REVISION	REVISION	DESCRIPTION:		FDOT DESIGN STANDARDS 2013	TRAFFIC RAILING - (THRIE-BEAM RETROFIT) WIDE STRONG CURB TYPE 2	INDEX NO.	SHEET NO.
01/01/08						473	3

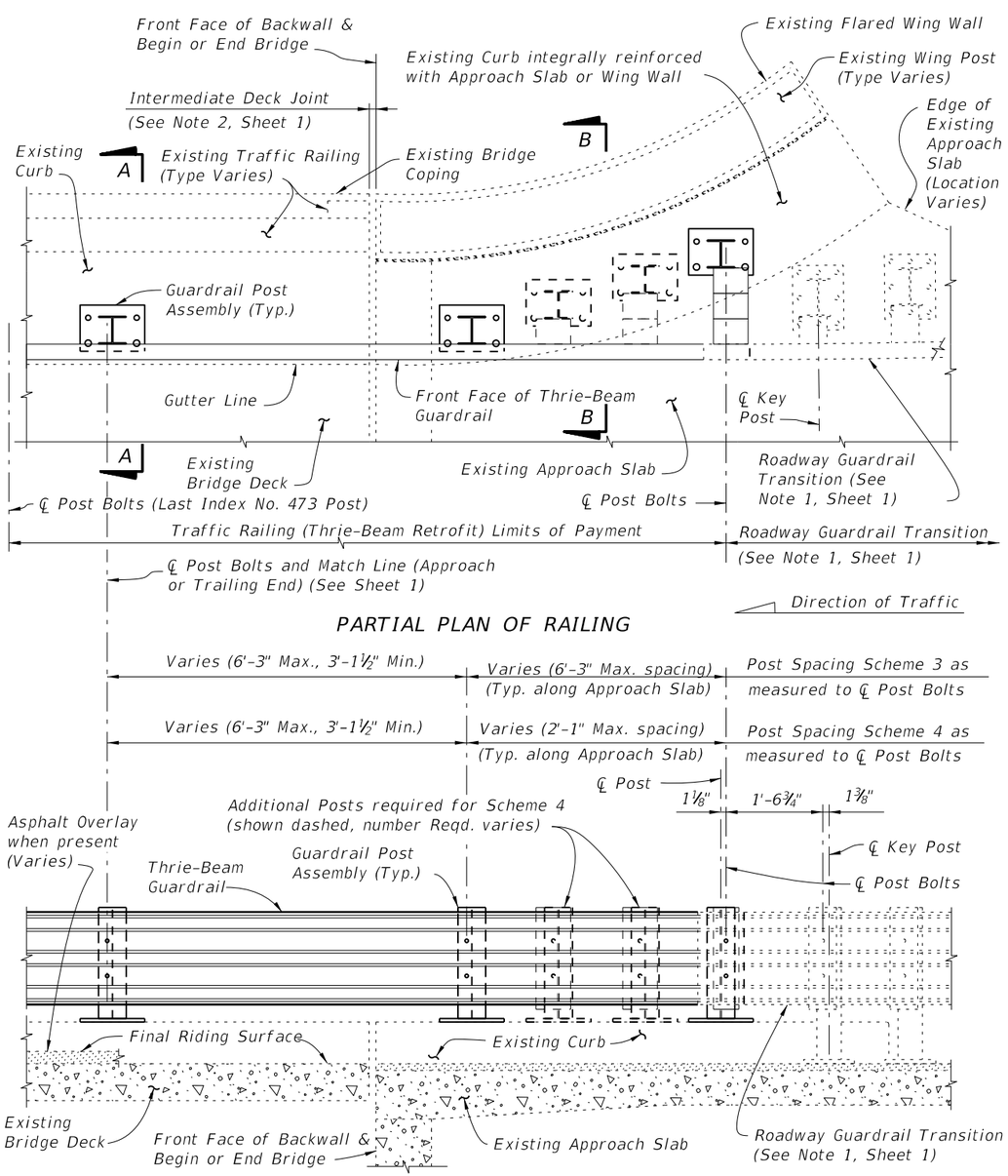

SCHEMES 3 AND 4
RAILING END TREATMENT FOR FLARED INTEGRAL CURBS

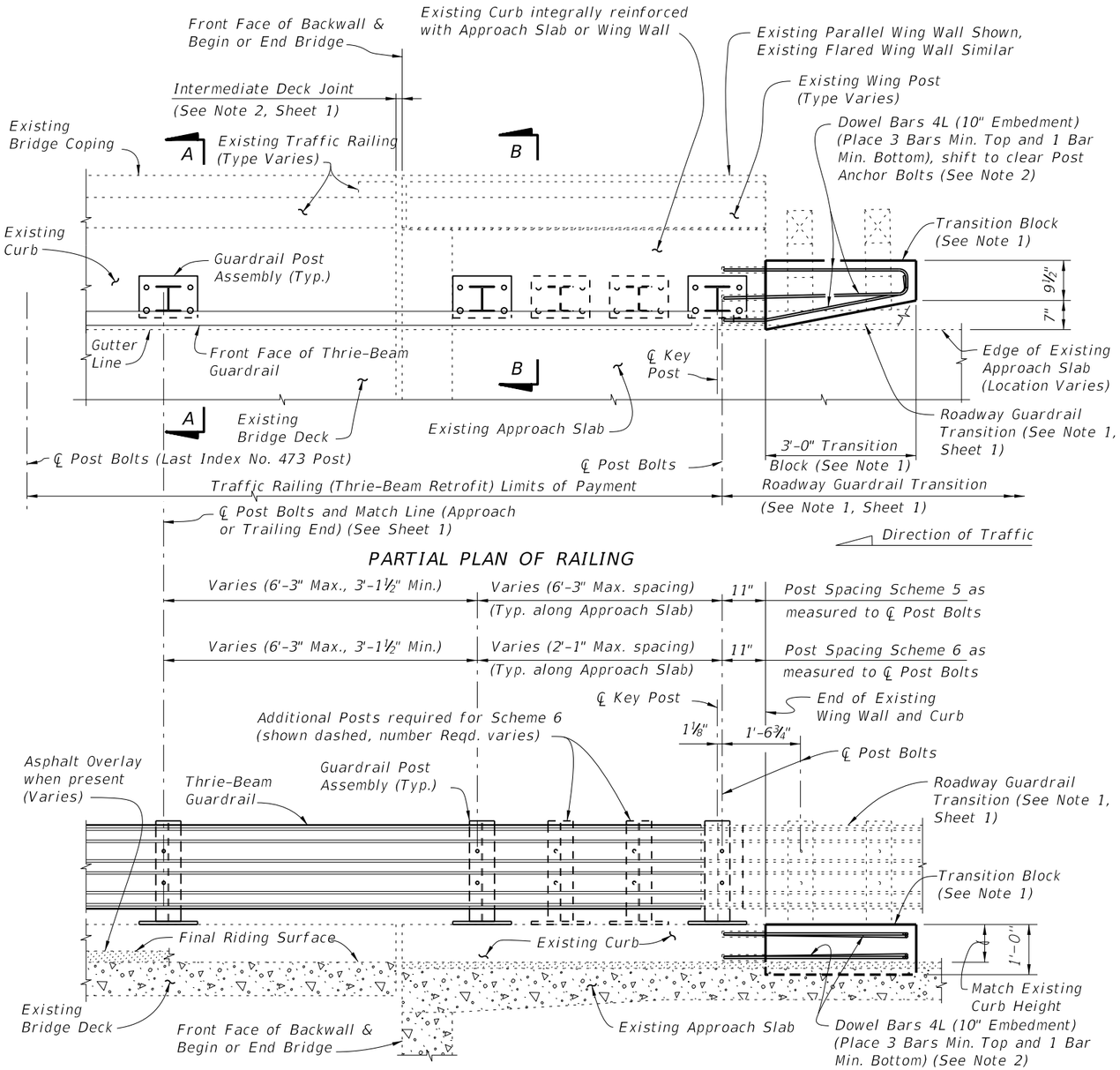

SCHEMES 5 AND 6
RAILING END TREATMENT FOR PARALLEL INTEGRAL CURBS

SCHEMES 5 AND 6 NOTES:

1. Provide Transition Block (as shown) or Curb if existing Approach Slab Curb does not extend to end of Approach Slab. Shape and height of Transition Block or Curb shall match existing bridge curb. Transition Block may be omitted on trailing ends with no opposing traffic.

2. Field bend Dowel Bars 4L within Transition Block as required to maintain 2" top and side clearance and 3" bottom clearance.

C:\d\projects\standards\structures\2013book\00473-dof4.dgn rd960rh 2:03:06 PM 6/28/2012

LAST REVISION	REVISION	DESCRIPTION:	FDOT DESIGN STANDARDS 2013	TRAFFIC RAILING - (THRIE-BEAM RETROFIT) WIDE STRONG CURB TYPE 2	INDEX NO.	SHEET NO.
01/01/08					473	4

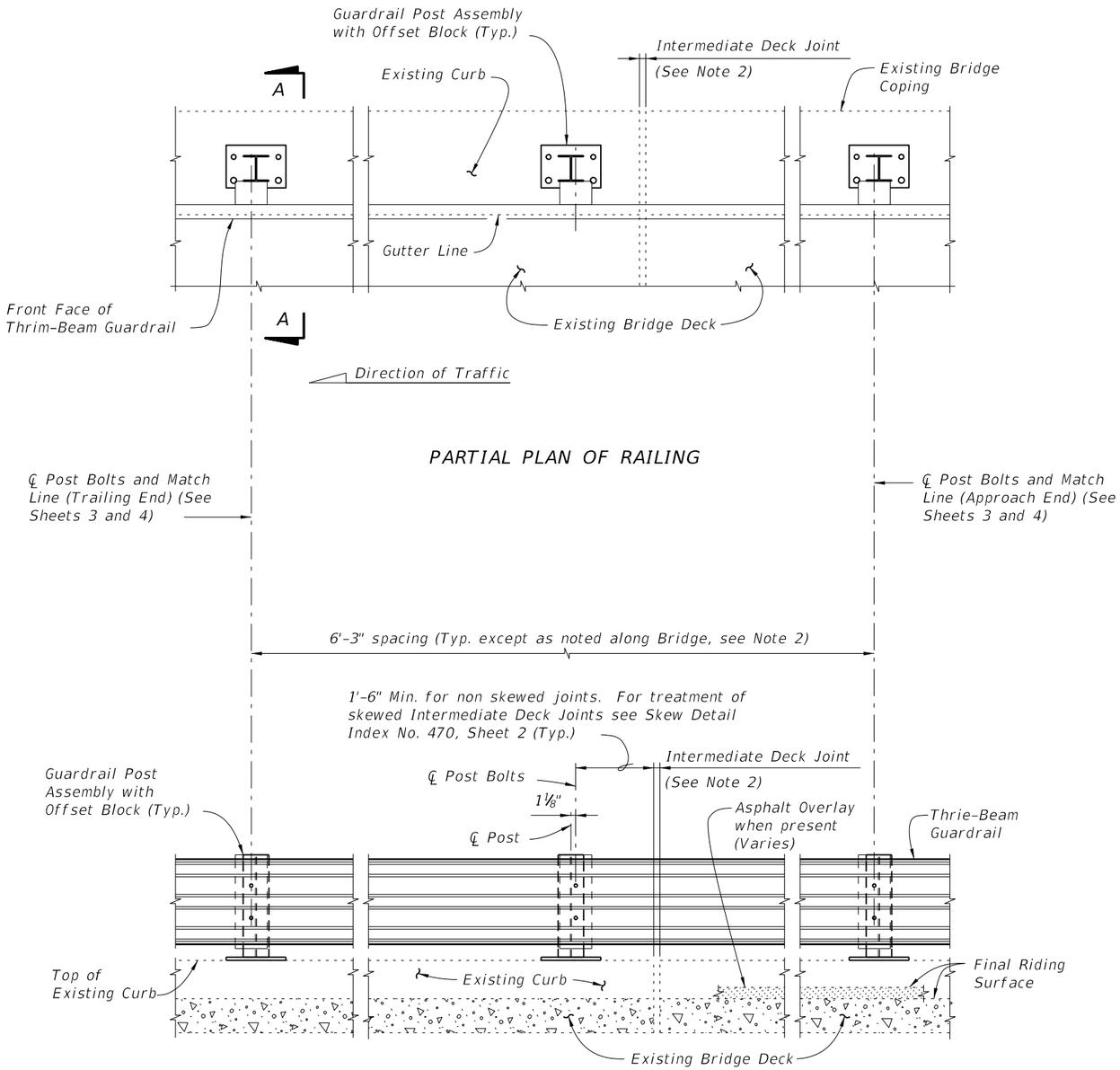

PARTIAL ELEVATION OF INSIDE FACE OF RAILING

TYPICAL TREATMENT OF RAILING ALONG BRIDGE

NOTES:

1. On approach end provide Index No. 402 (as shown) or other site specific treatment, see Roadway Plans. For treatment of trailing end see Roadway Plans.
2. Actual joint dimension and orientation vary. For Intermediate Deck Joints use the Modified Post Spacing at Intermediate Deck Joints Detail, Index No. 470, Sheet 2, as required.
3. Areas where existing structure has been removed shall match adjoining areas and shall be finished flat by grouting or grinding as required. Exposed existing reinforcing steel shall be burned off 1" below existing concrete and grouted over.

CROSS REFERENCES:
For Match Line see Sheets 3 & 4.
For Section A-A see Sheet 2.
For Traffic Railing Notes and Details see Index No. 470.

6/28/2012 2:03:09 PM rd960rh C:\d\projects\standards\structures\2013book\00474-1of4.dgn

LAST REVISION	REVISION	DESCRIPTION:		FDOT DESIGN STANDARDS 2013	TRAFFIC RAILING - (THRIE-BEAM RETROFIT) INTERMEDIATE CURB	INDEX NO.	SHEET NO.
01/01/08						474	1

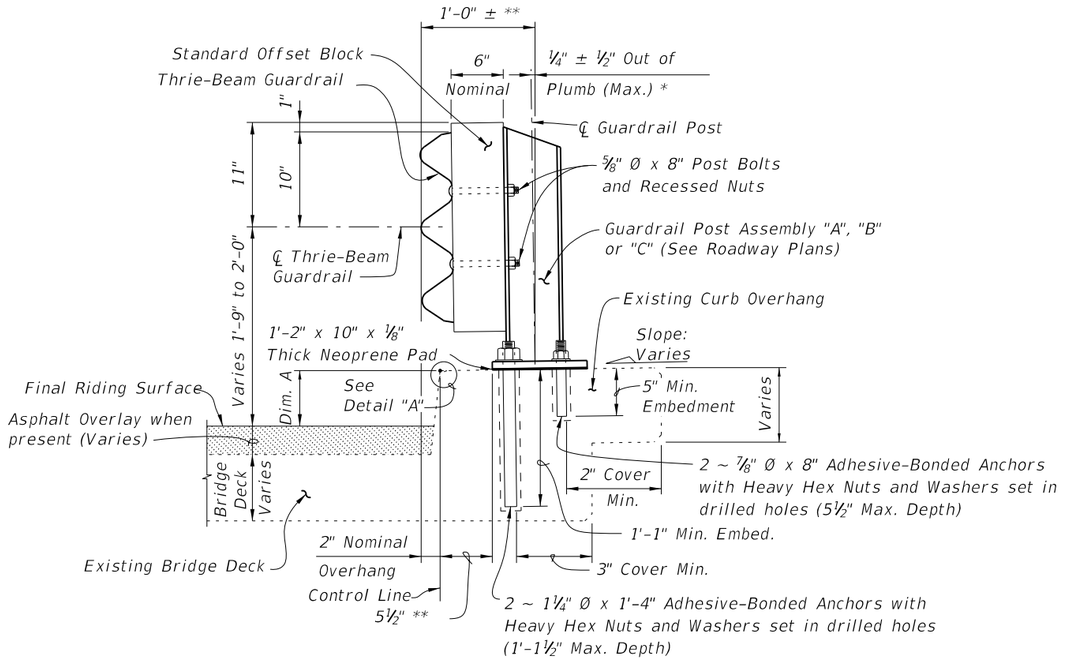

SECTION A-A
TYPICAL SECTION THRU RAILING ON BRIDGE DECK

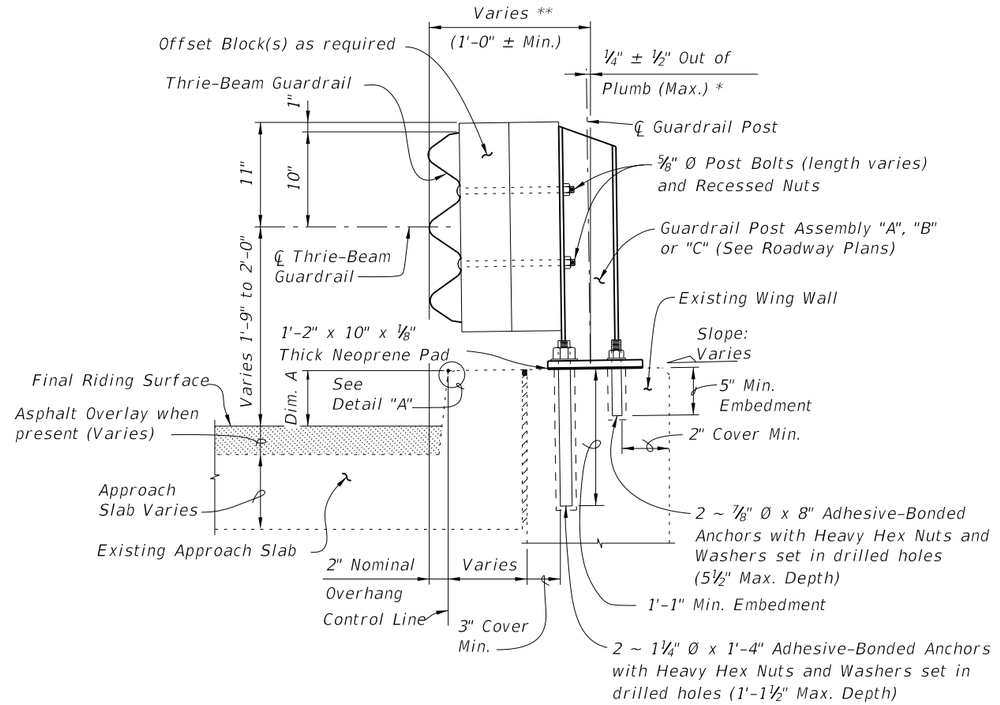

SECTION B-B (SCHEME 2)
TYPICAL SECTION THRU RAILING ALONG APPROACH SLAB

BILL OF REINFORCING STEEL		
MARK	SIZE	LENGTH
L	4	4'-1"

BAR BENDING DIAGRAM

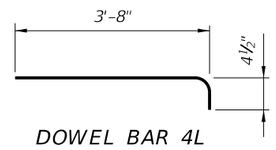

DOWEL BAR 4L

NOTE: All bar dimensions are out to out.

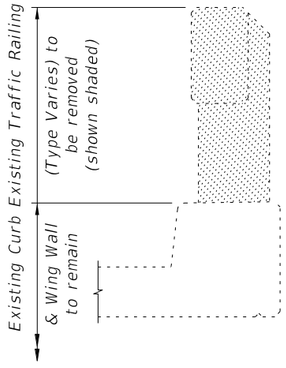

TYPICAL SECTION THRU EXISTING TRAFFIC RAILING SHOWING LIMITS OF REMOVAL (BRIDGE DECK SHOWN, WING WALL SIMILAR)

* Shim with washers around Anchor Bolts and Anchors as required to maintain tolerance.

** Offset may vary ± 1" for Adhesive-Bonded Anchors to clear existing curb reinforcing and provide minimum edge clearance. Offset shall be consistent along length of bridge.

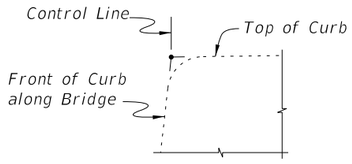

DETAIL "A"

CROSS REFERENCES:
For location of Section A-A see Sheet 1 and 3.
For location of Section B-B see Sheet 3
For application of Dim. A see Post Dimension Table on Index 470, Sheet 3.

6/28/2012 2:03:11 PM rd960rh C:\d\projects\standards\structures\2013book\00474-2of4.dgn

LAST REVISION	REVISION	DESCRIPTION:		FDOT DESIGN STANDARDS 2013	TRAFFIC RAILING - (THRIE-BEAM RETROFIT) INTERMEDIATE CURB	INDEX NO.	SHEET NO.
07/01/08			STATE OF FLORIDA DEPARTMENT OF TRANSPORTATION			474	2

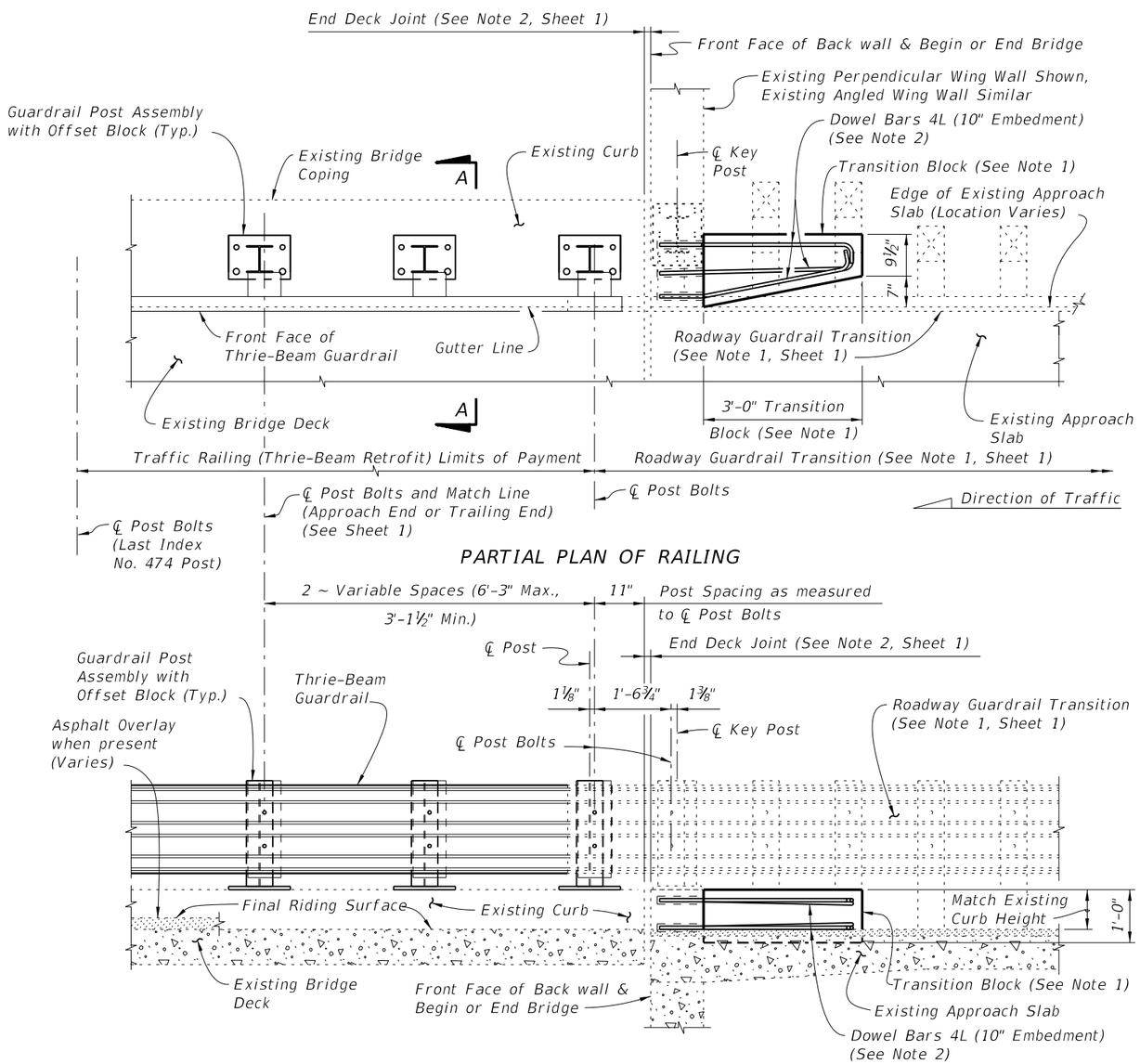

SCHEME 1

RAILING END TREATMENT FOR PERPENDICULAR OR ANGLED WING WALLS

SCHEME 1 NOTES:

1. Provide Transition Block (as shown) or Curb if existing Approach Slab does not have a curb, see Roadway Plans. Shape and height of Transition Block or Curb shall match existing bridge curb. Transition Block may be omitted on trailing ends with no opposing traffic.

2. Field bend Dowel Bars 4L within Transition Block as required to maintain 2" top and side clearance and 3" bottom clearance.

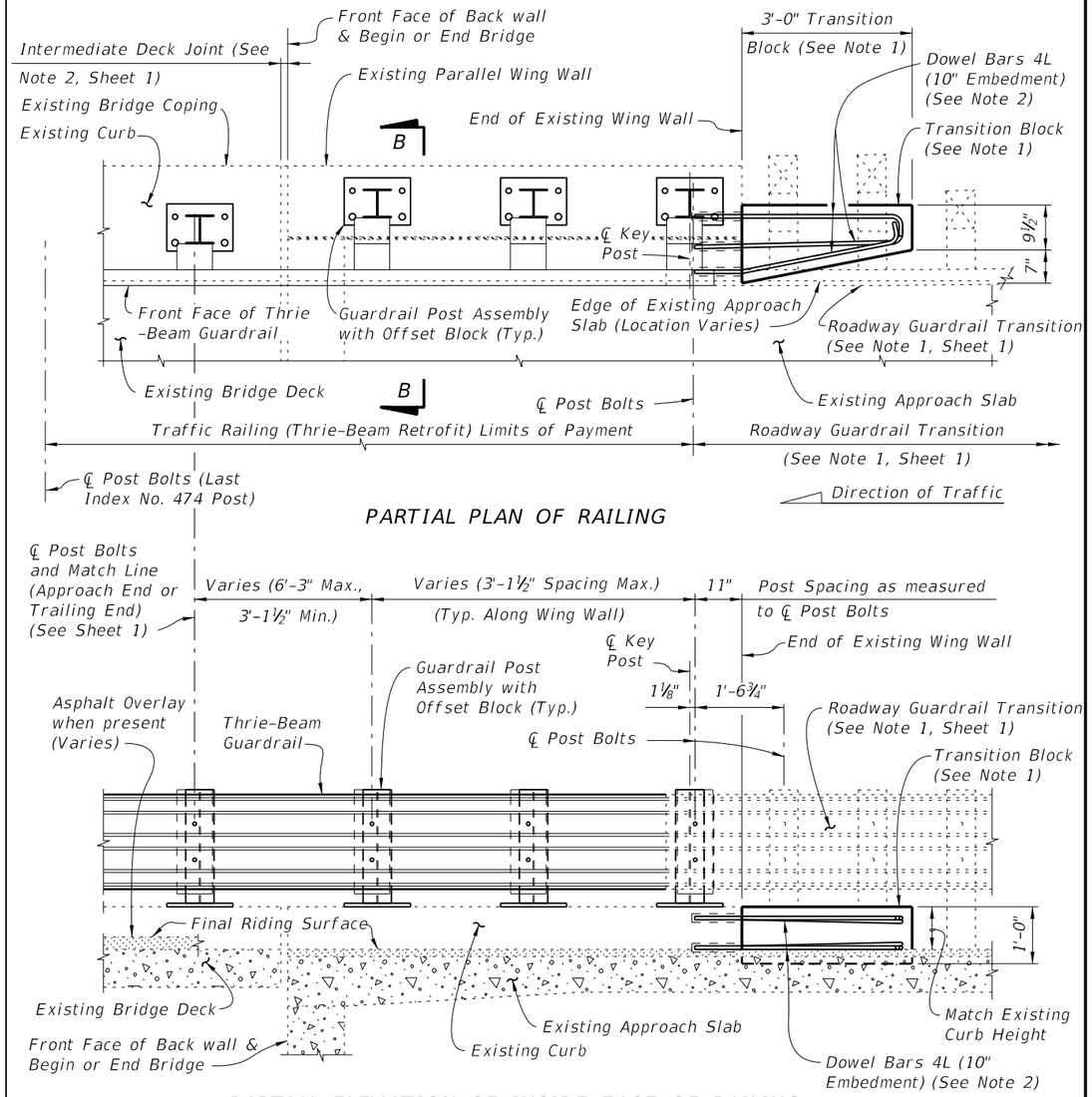

SCHEME 2

RAILING END TREATMENT FOR PARALLEL WING WALLS

SCHEME 2 NOTES:

1. Provide Transition Block (as shown) or Curb if existing Approach Slab Curb does not extend to end of Approach Slab. Shape and height of Transition Block or Curb shall match existing bridge curb. Transition Block may be omitted on trailing ends with no opposing traffic.

2. Field bend Dowel Bars 4L within Transition Block as required to maintain 2" top and side clearance and 3" bottom clearance.

C:\d\projects\standards\structures\2013book\00474-3of4.dgn
rd960rh
2:03:14 PM
6/28/2012

LAST REVISION	REVISION	DESCRIPTION:				
01/01/08			FDOT DESIGN STANDARDS 2013	TRAFFIC RAILING - (THRIE-BEAM RETROFIT) INTERMEDIATE CURB	INDEX NO. 474	SHEET NO. 3

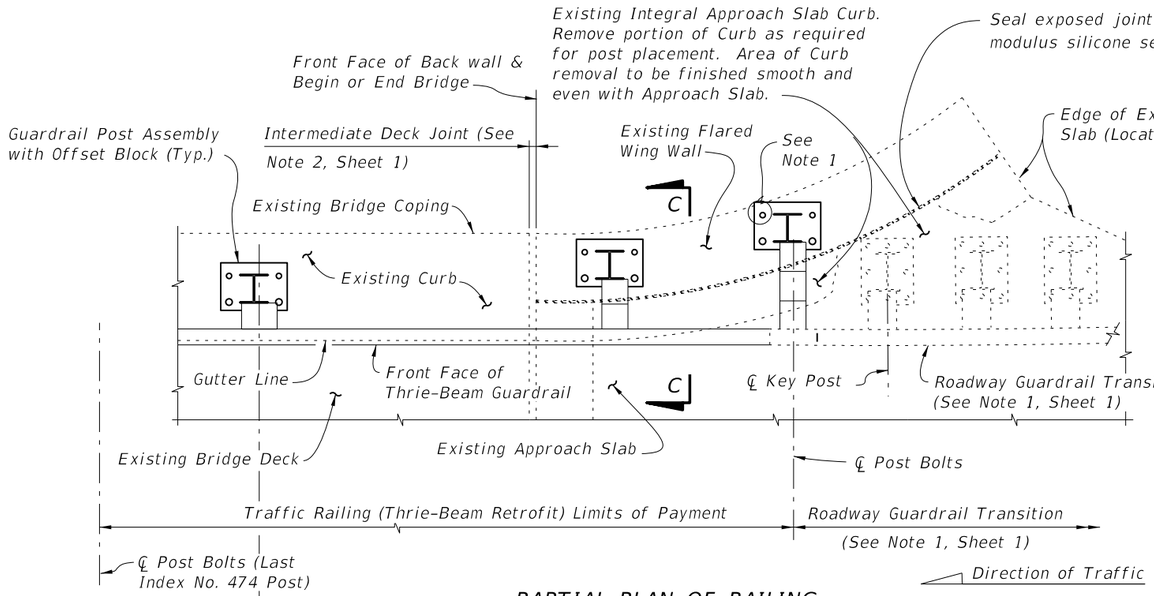

PARTIAL PLAN OF RAILING

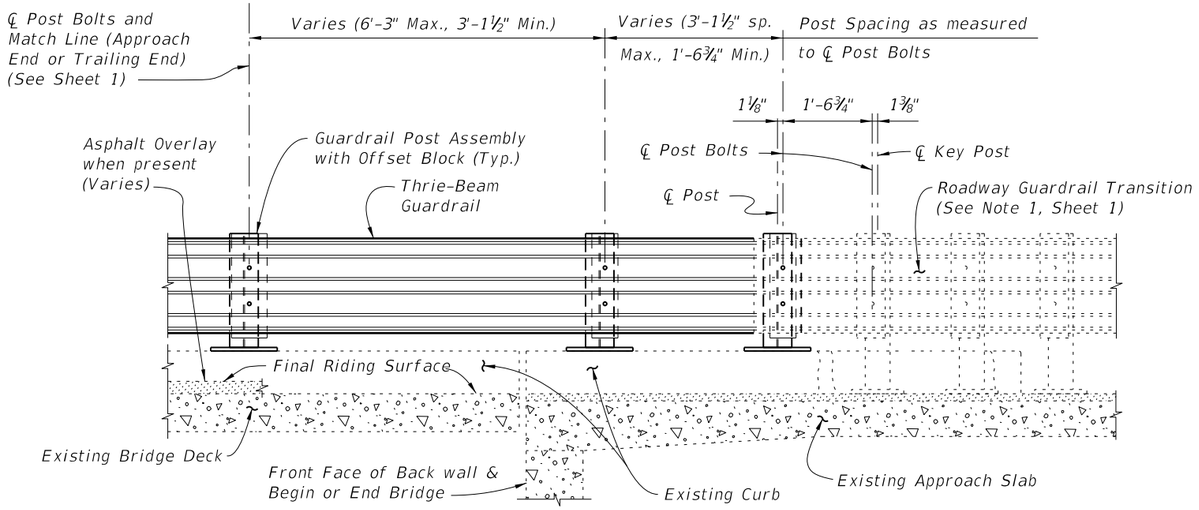

PARTIAL ELEVATION OF INSIDE FACE OF RAILING

SCHEME 3
RAILING END TREATMENT FOR FLARED WING WALLS

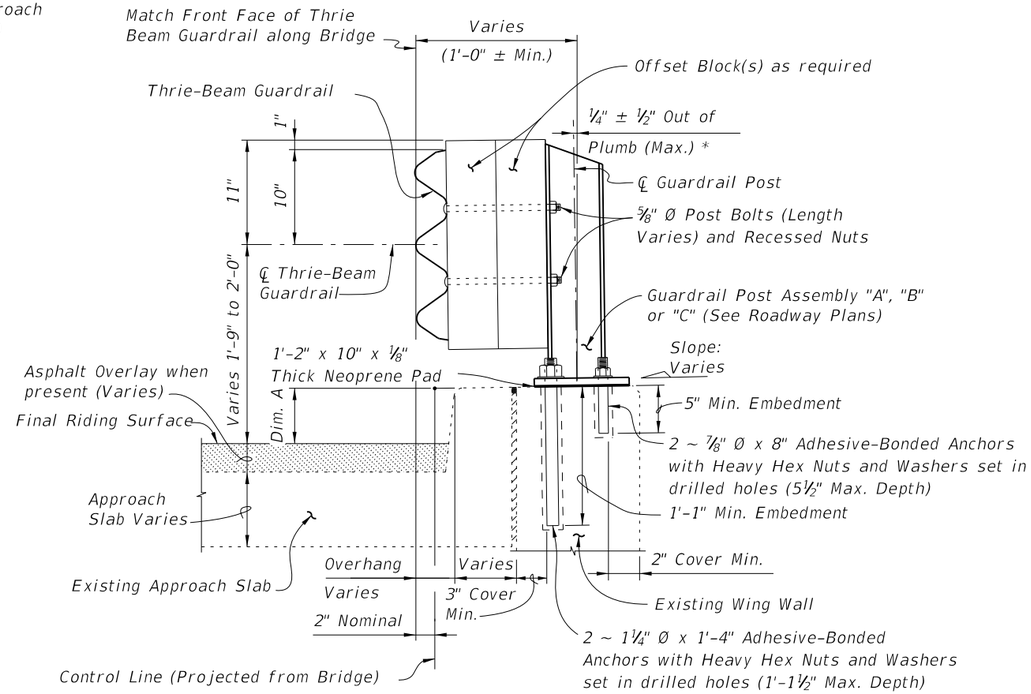

SECTION C-C (SCHEME 3)
TYPICAL SECTION THRU RAILING ALONG APPROACH SLAB

SCHEME 3 NOTE:

1. A single ⅞" Ø x 8" Adhesive-Bonded Anchor may be omitted as shown when 2" clear cover cannot be provided (see Section C-C).

CROSS REFERENCE:
For application of Dim. A see Post Dimension Table on Index 470, Sheet 3.

C:\d\projects\standards\structures\2013book\00474-4of4.dgn
rd960rh
2:03:16 PM
6/28/2012

LAST REVISION	REVISION	DESCRIPTION:				
07/01/09			FDOT DESIGN STANDARDS 2013	TRAFFIC RAILING - (THRIE-BEAM RETROFIT) INTERMEDIATE CURB	INDEX NO. 474	SHEET NO. 4

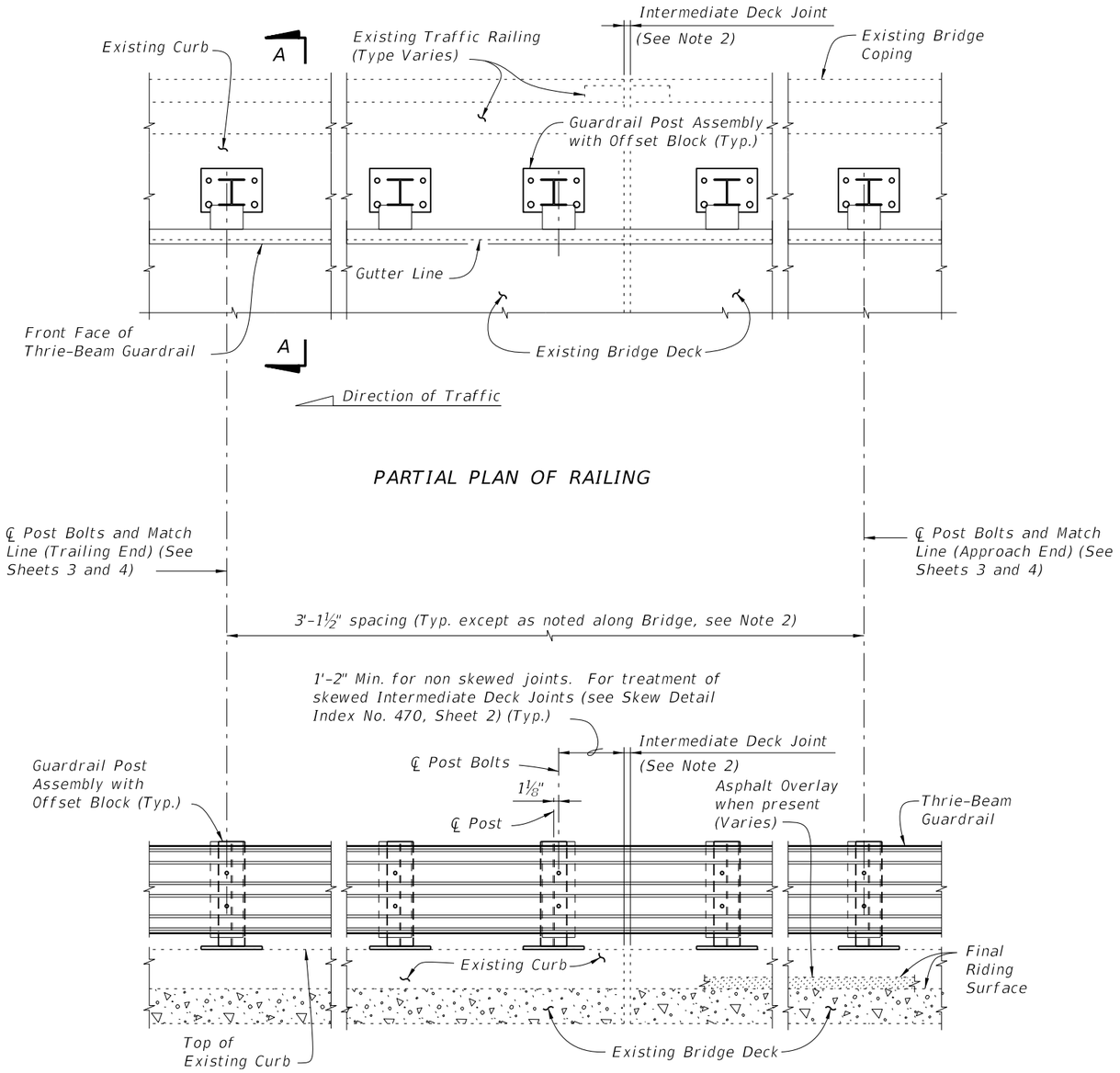

PARTIAL ELEVATION OF INSIDE FACE OF RAILING
(Existing Traffic Railing not shown for clarity)

TYPICAL TREATMENT OF RAILING ALONG BRIDGE

NOTES:

1. On approach end provide Index No. 402 (as shown) or other site specific treatment, see Roadway Plans. For treatment of trailing end see Roadway Plans.
2. Actual joint dimension and orientation vary. For Intermediate Deck Joints use the Modified Post Spacing at Intermediate Deck Joints Detail, Index No. 470, Sheet 2, as required.
3. Areas where existing structure has been removed shall match adjoining areas and shall be finished flat by grouting or grinding as required. Exposed existing reinforcing steel shall be burned off 1" below existing concrete and grouted over.

CROSS REFERENCES:
For Section A-A see Sheet 2.
For Traffic Railing Notes and Details see Index No. 470.

C:\d\projects\standards\structures\2013book\00475-1of4.dgn rd960rh 2:03:19 PM 6/28/2012

LAST REVISION	REVISION	DESCRIPTION:				
01/01/08			FDOT DESIGN STANDARDS 2013	TRAFFIC RAILING - (THRIE-BEAM RETROFIT) WIDE CURB TYPE 1	INDEX NO. 475	SHEET NO. 1

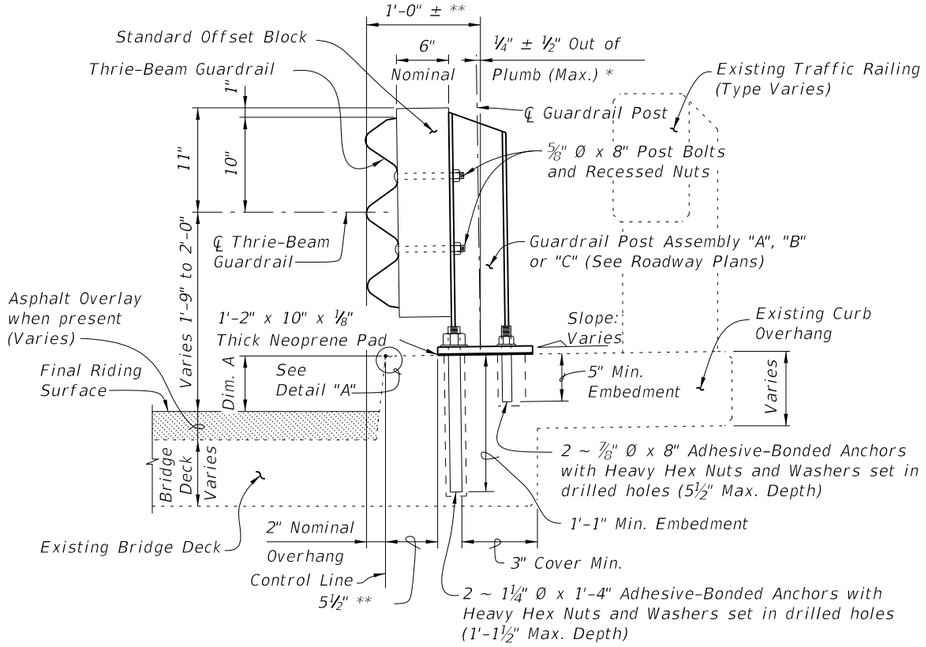

SECTION A-A
TYPICAL SECTION THRU RAILING ON BRIDGE DECK

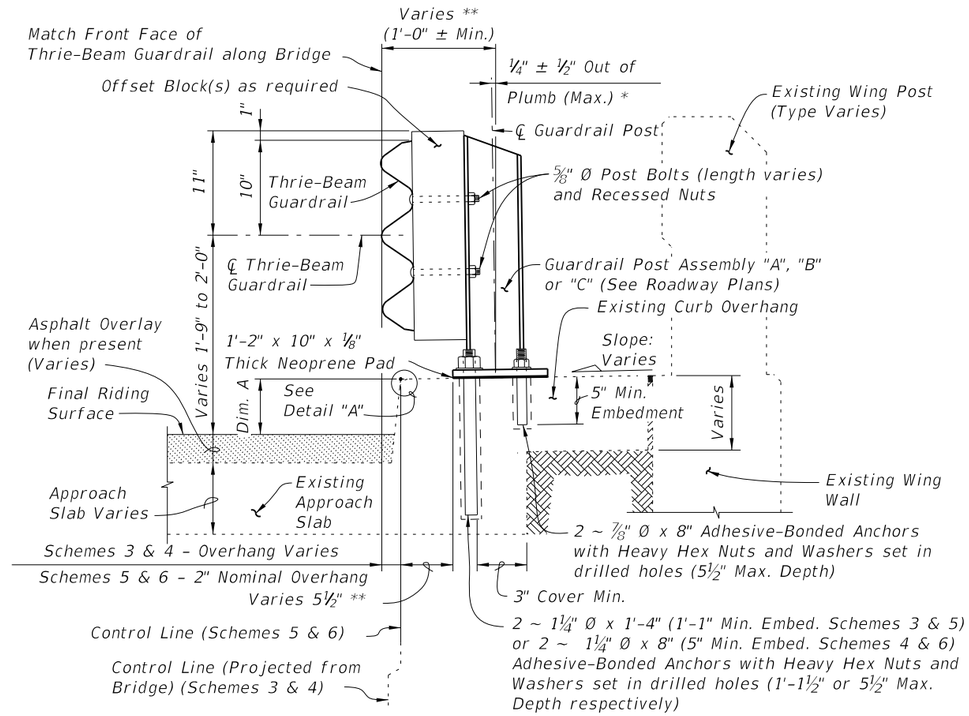

SECTION B-B
TYPICAL SECTION THRU RAILING ALONG APPROACH SLAB
(SCHEMES 5 AND 6 SHOWN, SCHEMES 3 AND 4 SIMILAR)

BILL OF REINFORCING STEEL		
MARK	SIZE	LENGTH
D	4	3'-7"
L	4	4'-1"
M	4	2'-8"

BAR BENDING DIAGRAMS

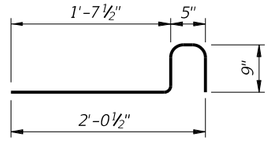

DOWEL BAR 4D

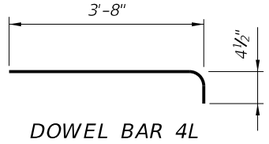

DOWEL BAR 4L

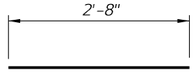

BAR 4M

NOTE: All bar dimensions are out to out.

* Shim with washers around Anchors as required to maintain tolerance.

** Offset may vary ± 1" for Adhesive-Bonded Anchors to clear existing curb reinforcing and provide minimum edge clearance. Offset shall be consistent along length of bridge.

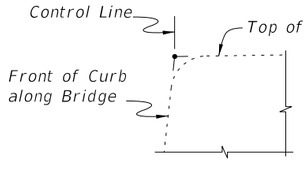

DETAIL "A"

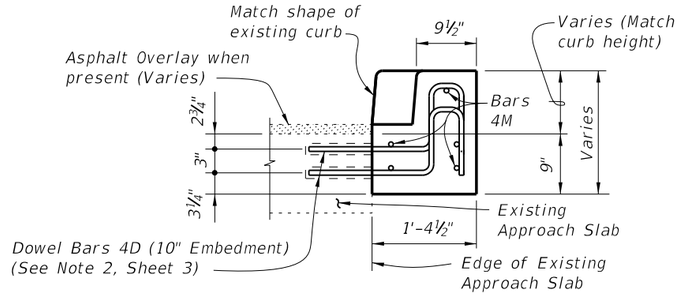

VIEW C-C

CROSS REFERENCES:
For location of Section A-A see Sheet 1, 3 & 4.
For location of Section B-B see Sheet 4.
For location of View C-C see Sheet 3.
For application of Dim. A see Post Dimension Table on Index 470, Sheet 3.

C:\d\projects\standards\structures\2013book\00475-2of4.dgn rd960rh 2:03:21 PM 6/28/2012

LAST REVISION	REVISION	DESCRIPTION:		FDOT DESIGN STANDARDS 2013	TRAFFIC RAILING - (THRIE-BEAM RETROFIT) WIDE CURB TYPE 1	INDEX NO.	SHEET NO.
01/01/08						475	2

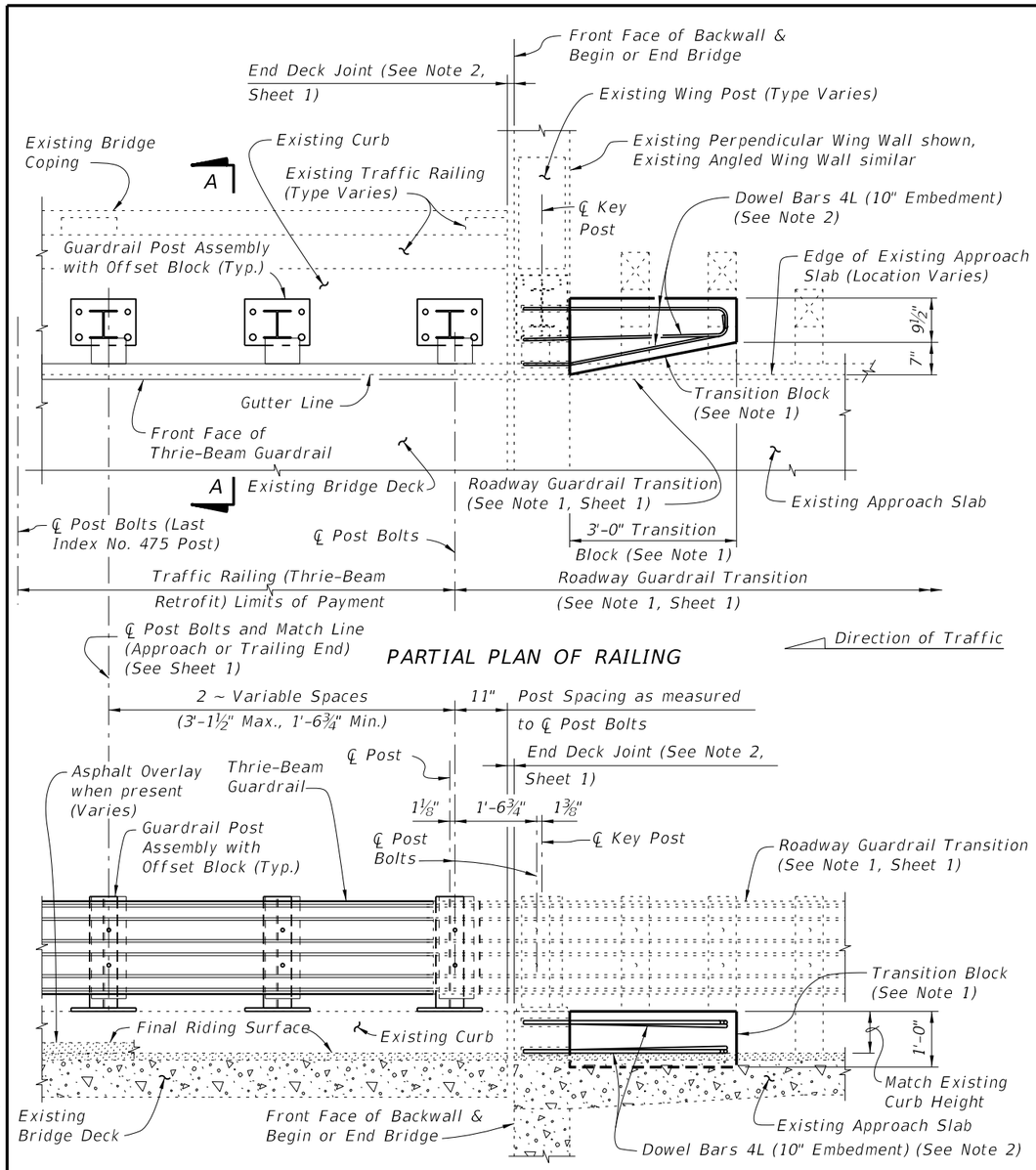

SCHEME 1

RAILING END TREATMENT FOR PERPENDICULAR OR ANGLED WING WALLS

SCHEME 1 NOTES:

1. Provide Transition Block (as shown) or Curb if existing Approach Slab does not have a curb, see Roadway Plans. Shape and height of Transition Block or Curb shall match existing bridge curb. Transition Block may be omitted on trailing ends with no opposing traffic.

2. Field bend Dowel Bars 4L within Transition Block as required to maintain 2" top and side clearance and 3" bottom clearance.

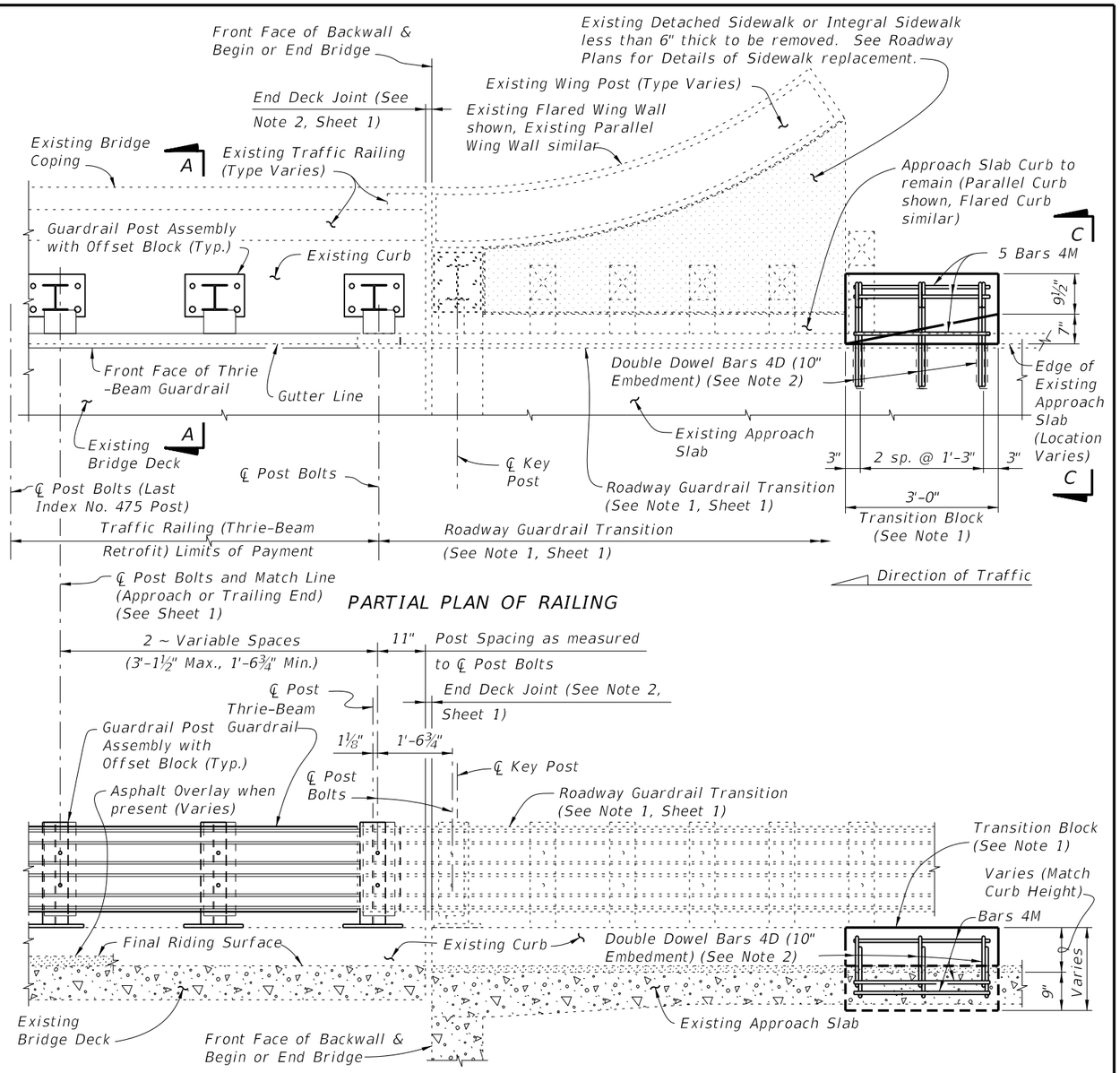

SCHEME 2

RAILING END TREATMENT FOR PARALLEL OR FLARED CURBS WITH DETACHED SIDEWALKS OR INTEGRAL SIDEWALKS LESS THAN 6" THICK

SCHEME 2 NOTES:

1. Provide Transition Block (as shown) or Curb if existing Approach Slab Curb does not extend to end of Approach Slab. Shape and height of Transition Block or Curb shall match existing bridge curb. Transition Block may be omitted on trailing ends with no opposing traffic and on bridges with flared Approach Slab Curbs.

2. Field bend or tilt Dowel Bars 4D and Bars 4M within Transition Block as required to maintain 2" top and side clearance and 3" bottom clearance.

C:\d\projects\standards\structures\2013book\00475-3of4.dgn
rd960rh
2:03:23 PM
6/28/2012

LAST REVISION	REVISION	DESCRIPTION:			INDEX NO.	SHEET NO.
01/01/08			FDOT DESIGN STANDARDS 2013	TRAFFIC RAILING - (THRIE-BEAM RETROFIT) WIDE CURB TYPE 1	475	3

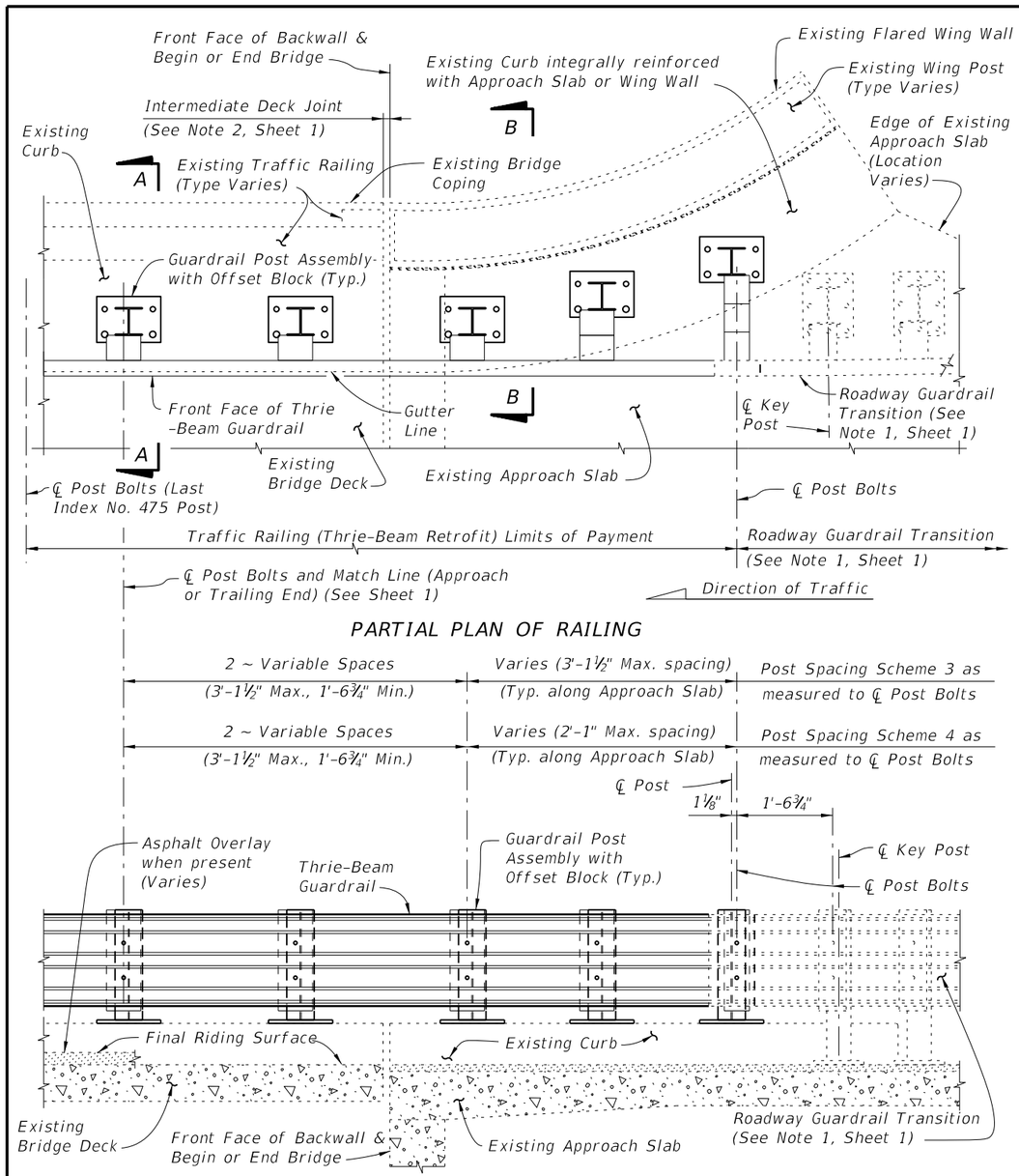

PARTIAL PLAN OF RAILING

PARTIAL ELEVATION OF INSIDE FACE OF RAILING
(Existing Wing Post and Traffic Railing not shown for clarity)

SCHEMES 3 AND 4
RAILING END TREATMENT FOR FLARED INTEGRAL CURBS

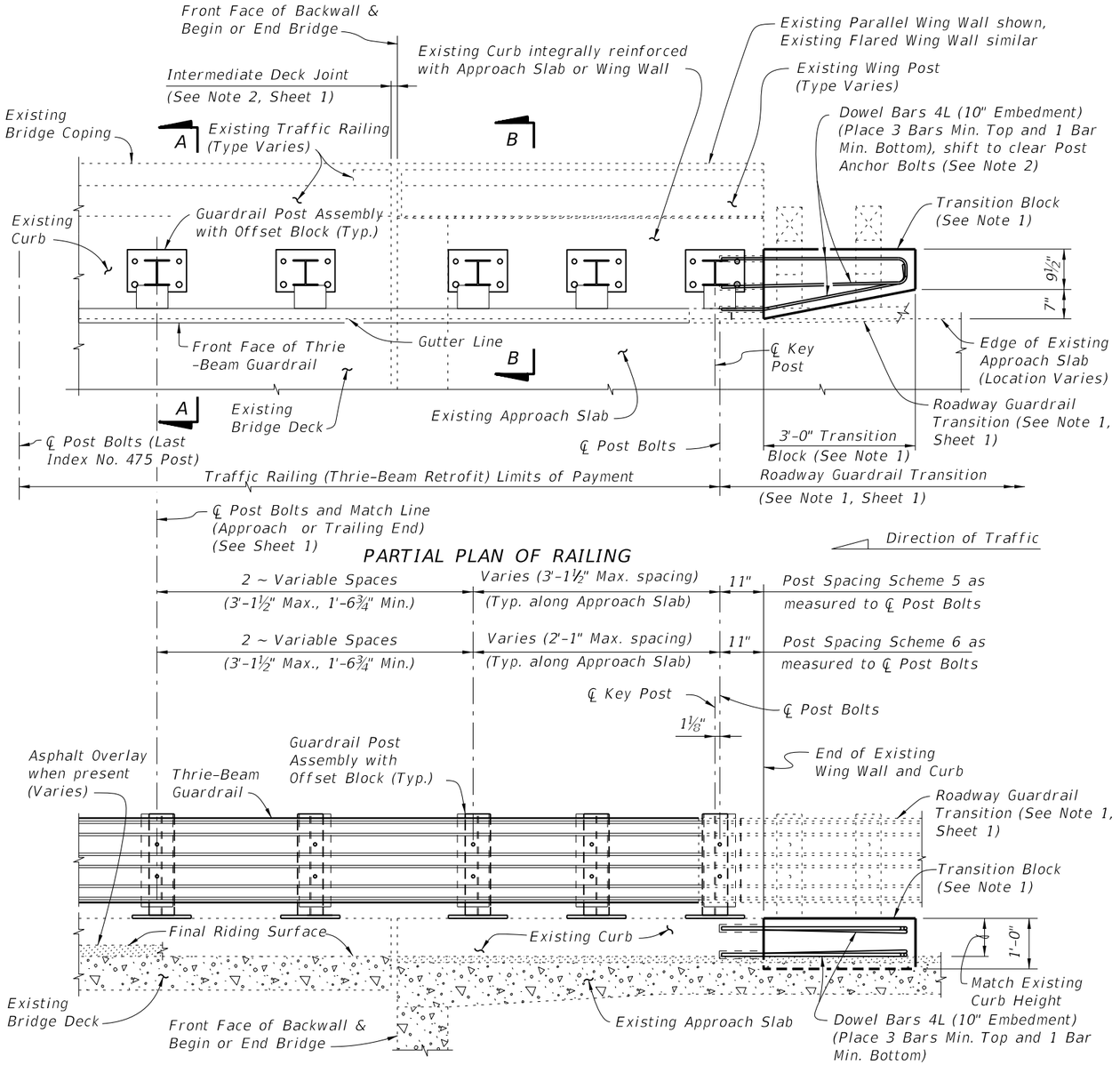

PARTIAL PLAN OF RAILING

PARTIAL ELEVATION OF INSIDE FACE OF RAILING
(Existing Wing Post and Traffic Railing not shown for clarity)

SCHEMES 5 AND 6
RAILING END TREATMENT FOR PARALLEL INTEGRAL CURBS

SCHEMES 5 AND 6 NOTES:

1. Provide Transition Block (as shown) or Curb if existing Approach Slab Curb does not extend to end of Approach Slab. Shape and height of Transition Block or Curb shall match existing bridge curb. Transition Block may be omitted on trailing ends with no opposing traffic.

2. Field bend Dowel Bars 4L within Transition Block as required to maintain 2" top and side clearance and 3" bottom clearance.

C:\d\projects\standards\structures\2013book\00475-4of4.dgn
rd960rh
2:03:26 PM
6/28/2012

LAST REVISION	REVISION	DESCRIPTION:				
01/01/08			FDOT DESIGN STANDARDS 2013	TRAFFIC RAILING - (THRIE-BEAM RETROFIT) WIDE CURB TYPE 1	INDEX NO. 475	SHEET NO. 4

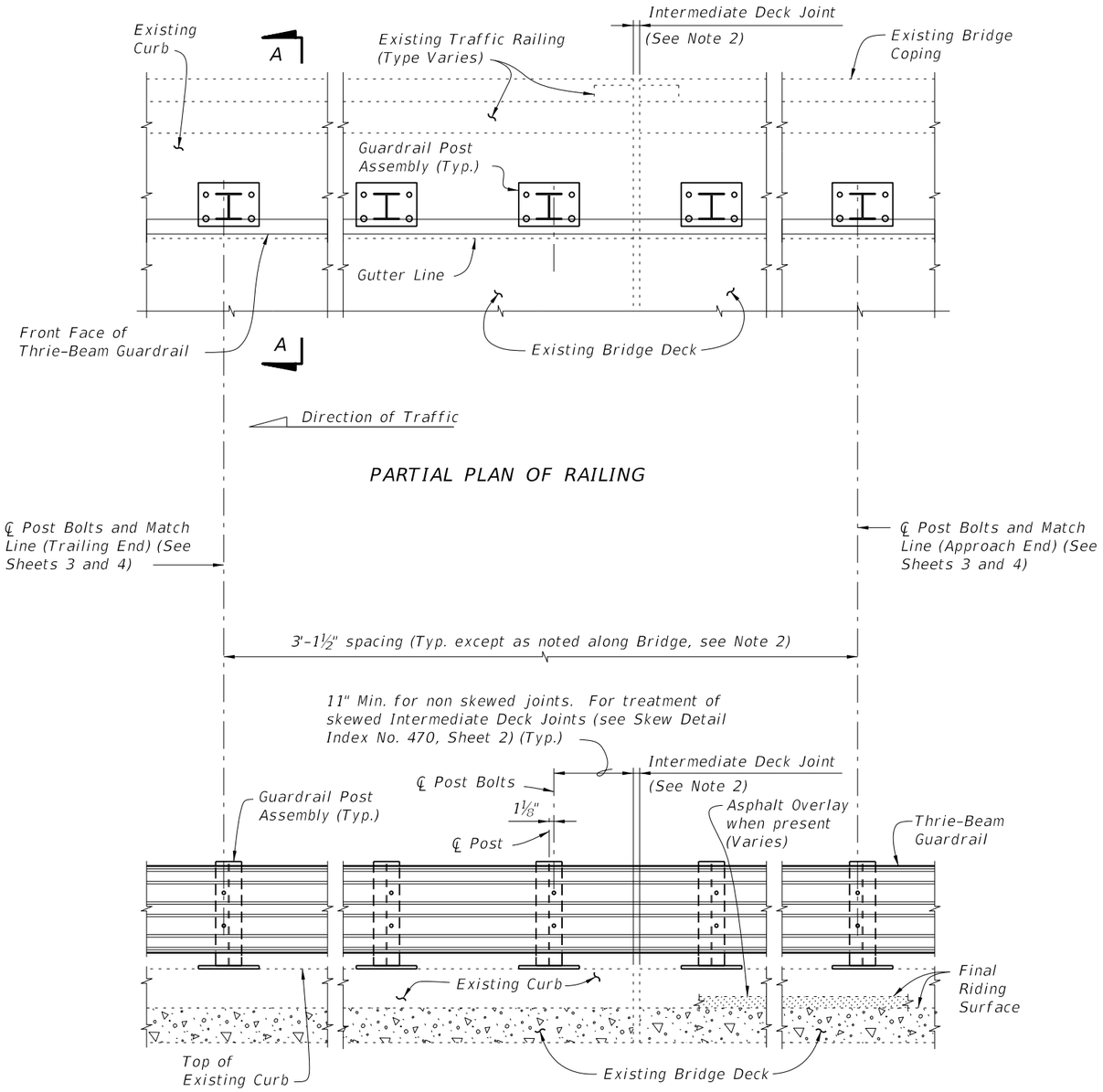

PARTIAL ELEVATION OF INSIDE FACE OF RAILING
(Existing Traffic Railing not shown for clarity)

TYPICAL TREATMENT OF RAILING ALONG BRIDGE

NOTES:

1. On approach end provide Index No. 402 (as shown) or other site specific treatment, see Roadway Plans. For treatment of trailing end see Roadway Plans.
2. Actual joint dimension and orientation vary. For Intermediate Deck Joints use the Modified Post Spacing at Intermediate Deck Joints Detail, Index No. 470, Sheet 2, as required.
3. Areas where existing structure has been removed shall match adjoining areas and shall be finished flat by grouting or grinding as required. Exposed existing reinforcing steel shall be burned off 1" below existing concrete and grouted over.

CROSS REFERENCES:
For Section A-A see Sheet 2.
For Traffic Railing Notes and Details see Index No. 470.

6/28/2012 2:03:29 PM rd960rh C:\d\projects\standards\structures\2013book\00476-1of4.dgn

LAST REVISION	REVISION	DESCRIPTION:		FDOT DESIGN STANDARDS 2013	TRAFFIC RAILING - (THRIE-BEAM RETROFIT) WIDE CURB TYPE 2	INDEX NO.	SHEET NO.
01/01/08			STATE OF FLORIDA DEPARTMENT OF TRANSPORTATION			476	1

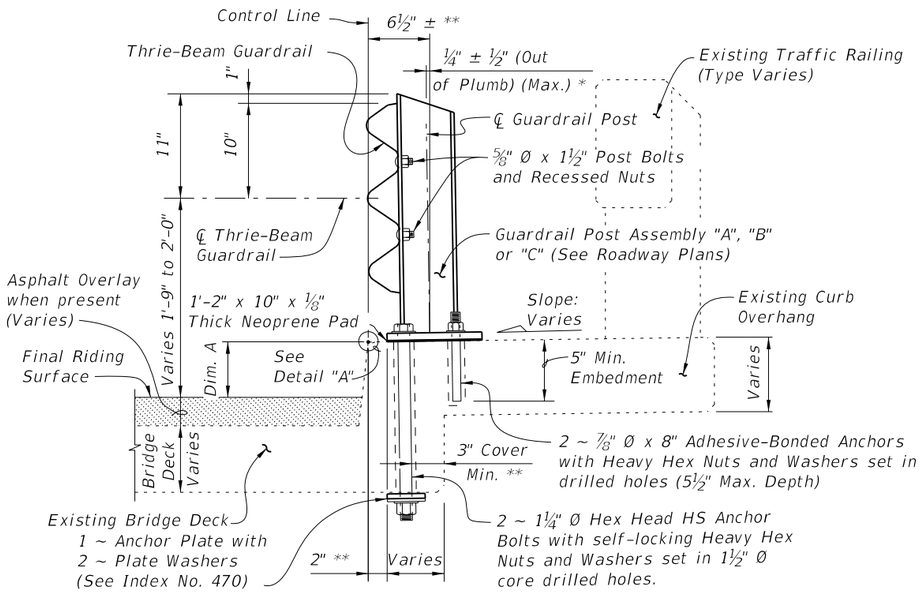

SECTION A-A
TYPICAL SECTION THRU RAILING ON BRIDGE DECK

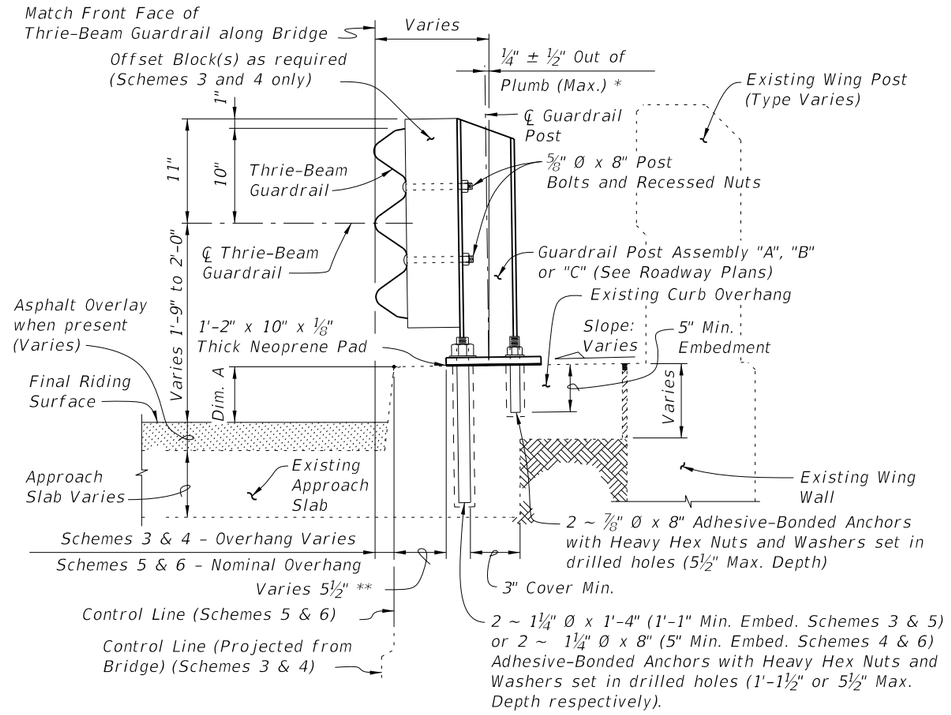

SECTION B-B
TYPICAL SECTION THRU RAILING ALONG APPROACH SLAB
(SCHEMES 5 AND 6 SHOWN, SCHEMES 3 AND 4 SIMILAR)

BILL OF REINFORCING STEEL		
MARK	SIZE	LENGTH
D	4	3'-7"
L	4	4'-1"
M	4	2'-8"

BAR BENDING DIAGRAMS

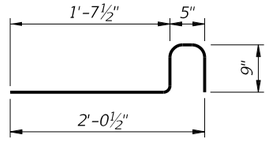

DOWEL BAR 4D

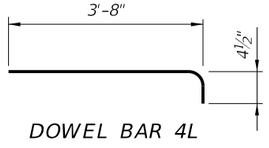

DOWEL BAR 4L

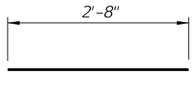

BAR 4M

NOTE: All bar dimensions are out to out.

* Shim with washers around Anchors as required to maintain tolerance.

** Offset may vary ± 1" for Adhesive-Bonded Anchors to clear existing curb reinforcing and provide minimum edge clearance. Offset shall be consistent along length of bridge.

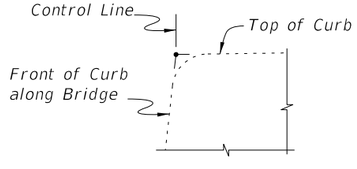

DETAIL "A"

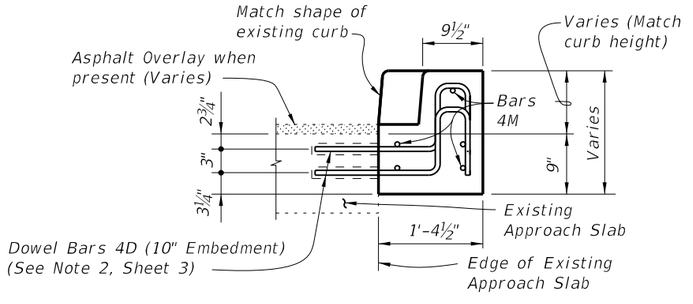

VIEW C-C

CROSS REFERENCES:
For location of Section A-A see Sheet 1, 3 & 4.
For location of Section B-B see Sheet 4.
For location of Section C-C see Sheet 3.
For application of Dim. A see Post Dimension Table on Index 470, Sheet 3.

6/28/2012 2:03:31 PM rd960rh C:\d\projects\standards\structures\2013book\00476-2of4.dgn

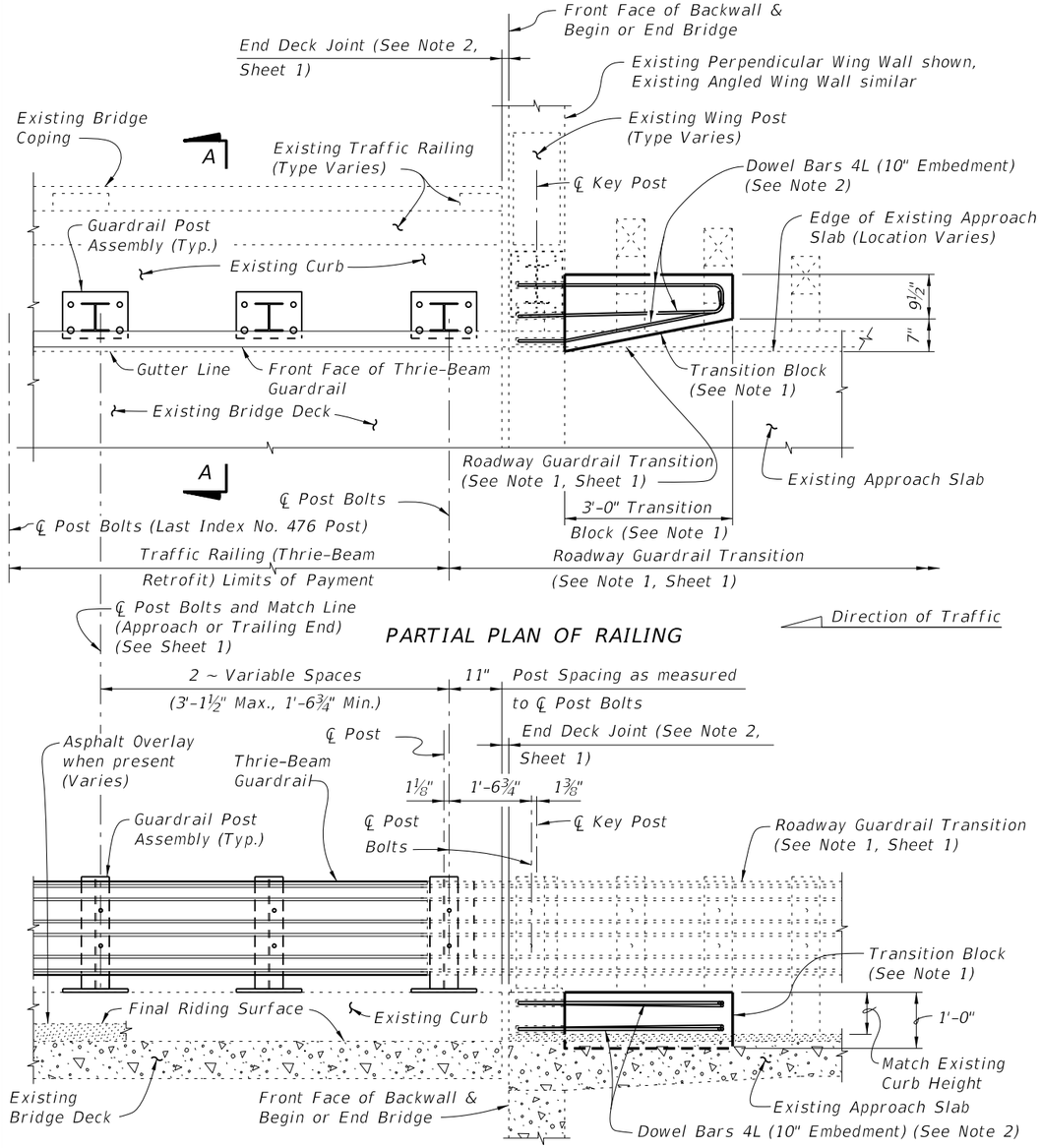

PARTIAL PLAN OF RAILING

PARTIAL ELEVATION OF INSIDE FACE OF RAILING
(Existing Wing Post and Traffic Railing not shown for clarity)

SCHEME 1

RAILING END TREATMENT FOR PERPENDICULAR OR ANGLED WING WALLS

SCHEME 1 NOTES:

1. Provide Transition Block (as shown) or Curb if existing Approach Slab does not have a curb, see Roadway Plans. Shape and height of Transition Block or Curb shall match existing bridge curb. Transition Block may be omitted on trailing ends with no opposing traffic.

2. Field bend Dowel Bars 4L within Transition Block as required to maintain 2" top and side clearance and 3" bottom clearance.

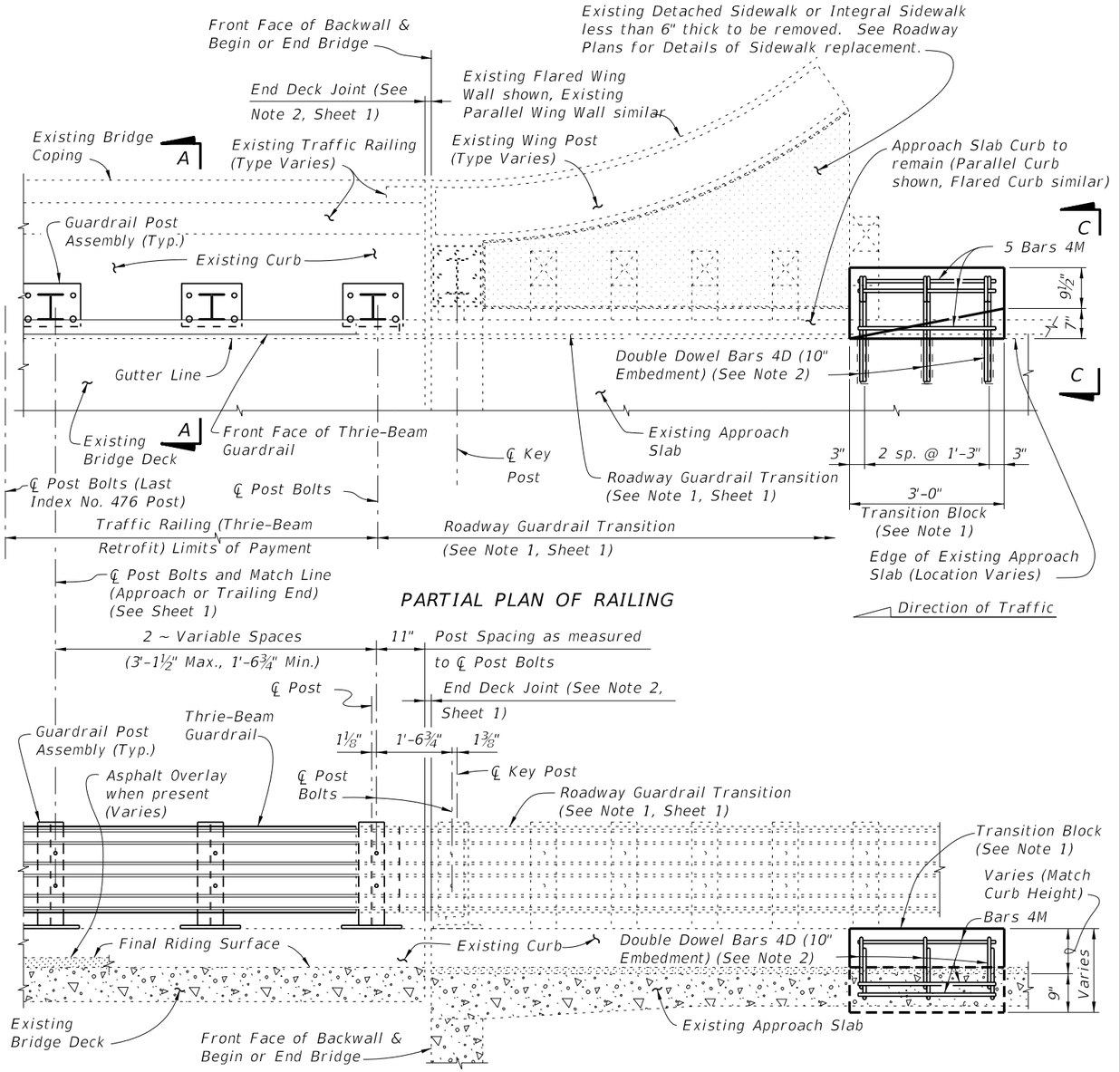

PARTIAL PLAN OF RAILING

PARTIAL ELEVATION OF INSIDE FACE OF RAILING
(Existing Wing Post and Traffic Railing not shown for clarity)

SCHEME 2

RAILING END TREATMENT FOR PARALLEL OR FLARED CURBS WITH DETACHED SIDEWALKS OR INTEGRAL SIDEWALK LESS THAN 6" THICK

SCHEME 2 NOTES:

1. Provide Transition Block (as shown) or Curb if existing Approach Slab Curb does not extend to end of Approach Slab. Shape and height of Transition Block or Curb shall match existing bridge curb. Transition Block may be omitted on trailing ends with no opposing traffic and on bridges with flared Approach Slab Curbs.

2. Field bend or tilt Dowel Bars 4D and Bars 4M within Transition Block as required to maintain 2" top and side clearance and 3" bottom clearance.

LAST REVISION	REVISION	DESCRIPTION:			INDEX NO.	SHEET NO.
01/01/08			FDOT DESIGN STANDARDS 2013	TRAFFIC RAILING - (THRIE-BEAM RETROFIT) WIDE CURB TYPE 2	476	3

C:\d\projects\standards\structures\2013book\00476-3of4.dgn
rd960rh
2:03:36 PM
6/28/2012

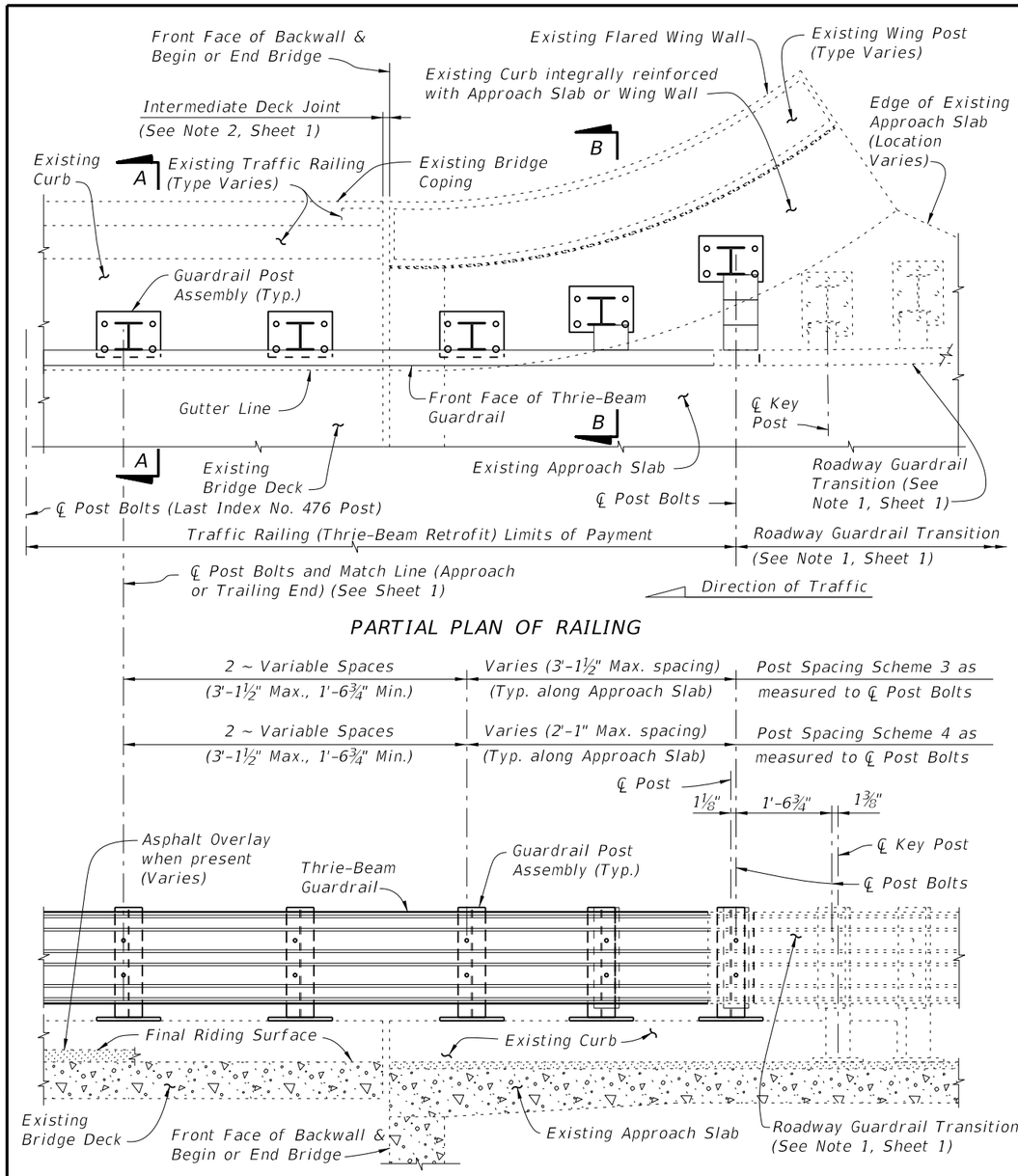

PARTIAL PLAN OF RAILING

PARTIAL ELEVATION OF INSIDE FACE OF RAILING
(Existing Wing Post and Traffic Railing not shown for clarity)

SCHEMES 3 AND 4
RAILING END TREATMENT FOR FLARED INTEGRAL CURBS

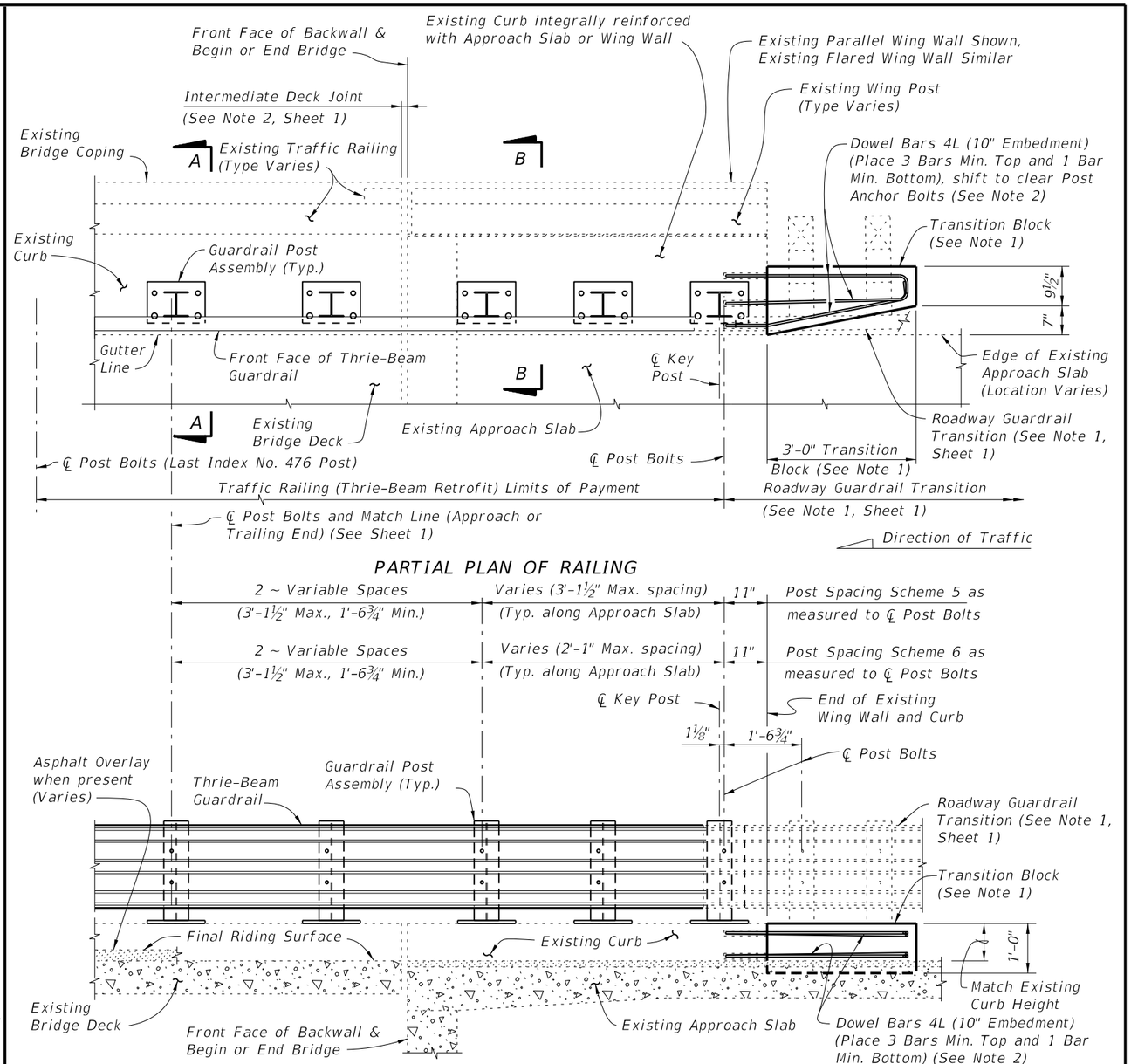

PARTIAL PLAN OF RAILING

PARTIAL ELEVATION OF INSIDE FACE OF RAILING
(Existing Wing Post and Traffic Railing not shown for clarity)

SCHEMES 5 AND 6
RAILING END TREATMENT FOR PARALLEL INTEGRAL CURBS

SCHEMES 5 AND 6 NOTES:

1. Provide Transition Block (as shown) or Curb if existing Approach Slab Curb does not extend to end of Approach Slab. Shape and height of Transition Block or Curb shall match existing bridge curb. Transition Block may be omitted on trailing ends with no opposing traffic.

2. Field bend Dowel Bars 4L within Transition Block as required to maintain 2" top and side clearance and 3" bottom clearance.

C:\d\projects\standards\structures\2013book\00476-4of4.dgn
rd960rh
2:03:38 PM
6/28/2012

LAST REVISION	REVISION	DESCRIPTION:				
01/01/08			FDOT DESIGN STANDARDS 2013	TRAFFIC RAILING - (THRIE-BEAM RETROFIT) WIDE CURB TYPE 2	INDEX NO. 476	SHEET NO. 4

TRAFFIC RAILING NOTES

This Traffic Railing Retrofit has been structurally evaluated to be equivalent or greater in strength to a design which has been successfully crash tested previously and approved for a NCHRP Report 350 Test Level 4 rating, except for the Tapered End Transition on Index No. 484.

CONCRETE: Concrete for the Traffic Railing (Vertical Face Retrofit), Spread Footing Approaches and replacement curb sections shall be Class IV. Concrete for Curb Transition Blocks shall be Class II (Bridge Deck).

REINFORCING STEEL: Reinforcing steel shall be ASTM A615, Grade 60, except Expansion Dowel Bar B which shall be ASTM A36 smooth round bar hot-dip galvanized in accordance with the Specifications.

EXPANSION SLEEVE ASSEMBLY: Pipe sleeve shall be ASTM D2241 PVC pipe, SDR13.5. End Cap shall be ASTM D2466 PVC socket fitting, Schedule 40. End of Sleeve assembly at railing open joint shall be sealed with silicone to prevent concrete intrusion during railing casting. A compressible expanded polystyrene plug is required in the opposite end of the assembly for correct dowel positioning during railing casting. Correct dowel positioning is required in order to provide for thermal movement of the deck.

ADHESIVE-BONDED ANCHORS AND DOWELS: Adhesive Bonding Material Systems for Anchors and Dowels shall comply with Specification Section 937 and be installed in accordance with Specification Section 416. The field testing proof loads required by Specification Section 416 shall be 23,800 lbs. for Dowel Bars 6D on the inside face (traffic side) of the railing (1'-0" embedment) and 18,500 lbs for Dowel Bars 6D along the outside face of the traffic railing (5" min. embedment).

BRIDGES ON CURVED ALIGNMENTS: The details presented in these Standards are shown for bridges on tangent alignments. Details for bridges on horizontally curved alignments are similar.

NAME, DATE AND BRIDGE NUMBER: The Name and Bridge Number shall be placed on the Traffic Railing so as to be seen on the driver's right side when approaching the bridge. The Date shall be placed on the driver's left side when approaching the bridge. The Date shall be the year the bridge was constructed. Letters and figures may be 3" tall black plastic as approved by the Engineer or ⅜" V-Grooves. V-Grooves shall be formed by preformed letters and figures.

ELEVATION MARKERS: Elevation Markers shall be placed on the top surface of the end bents as directed by the Engineer when portions of the existing traffic railing carrying existing elevation markers are removed. Markers are to be furnished by the Florida Department of Transportation and installed by the Contractor. The Department will determine the vertical Datum information for the marker.

SURFACE FINISH: Unless otherwise shown in the Plans, place a Class 5 Applied Finish Coating on the top and sides of the Traffic Railing (Vertical Face Retrofit).

REFLECTIVE RAILING MARKERS: Reflective Railing Markers shall meet Specification Section 993. Install markers on top of the Traffic Railing 2" from the face on the traffic side at the spacing shown in the table below. Reflector color (white or yellow) shall match the color of the near edgeline.

PAYMENT: Payment under Traffic Railing (Vertical Face Retrofit) include all materials and labor required to construct the railing. Incidental work as required for transition blocks, curbs, spread footings approaches, reflective railing markers (including installation) shall also be included under Traffic Railing (Vertical Face Retofit).

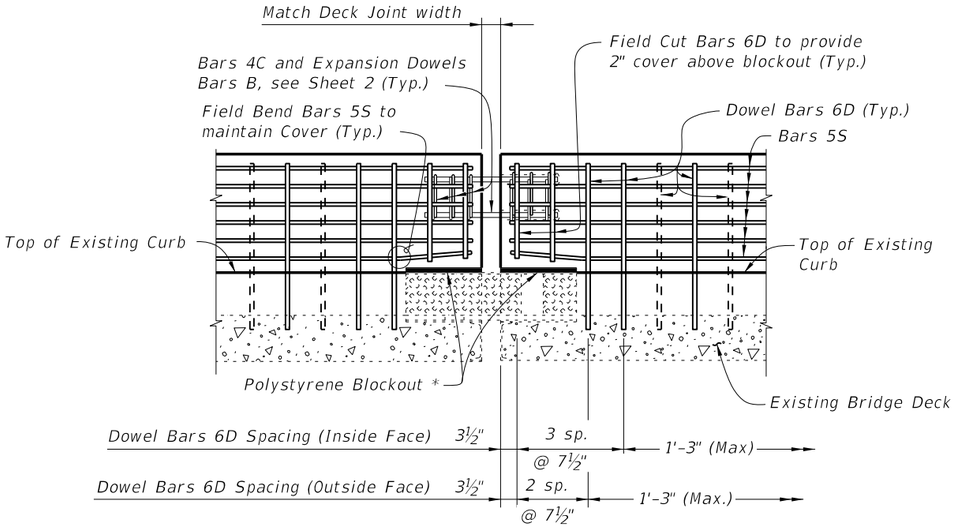

PARTIAL ELEVATION OF RAILING SHOWING INTERIOR FINGER/SLIDING PLATE JOINT
(Beam/Girder, Intermediate Bent or Pier not shown for clairty)

* Place 1" thick polystyrene blockout over limits of bridge deck expansion joint full width to the end of the Traffic Railing to allow for thermal movement. Seal Forms to prevent mortar leakage into the expansion joint.

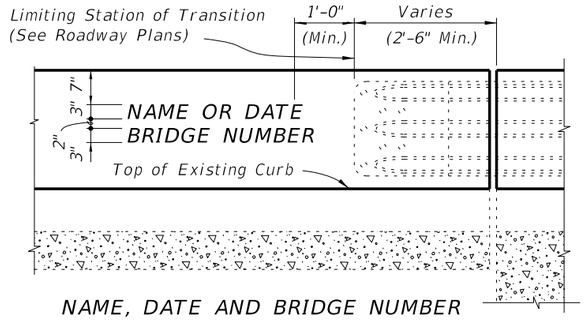

NAME, DATE AND BRIDGE NUMBER
LETTERING DETAIL

REFLECTIVE RAILING MARKER SPACING	
Distance - Edge of Travel Lane to Face of Railing	Spacing (Ft.)
< 4'	40'
4' to 8'	80'
> than 8'	None Required

ESTIMATED TRAFFIC RAILING QUANTITIES			
ITEM	UNIT	QUANTITY	
		9" Curb	Increment
Concrete	CY/FT	0.064	0.003 per in. height
Reinforcing Steel	LB/FT	13.27	0.10 per in. length

(Quantities are based on a 9" curb, no curb cross slope and 1'-0" embedment length of Bars 6D. If the curb height or embedment length differs from that shown, increase or decrease quantity by the given per inch increment.) See Index No. 484, Sheet 4 for Spread Footing Approach Quantities.

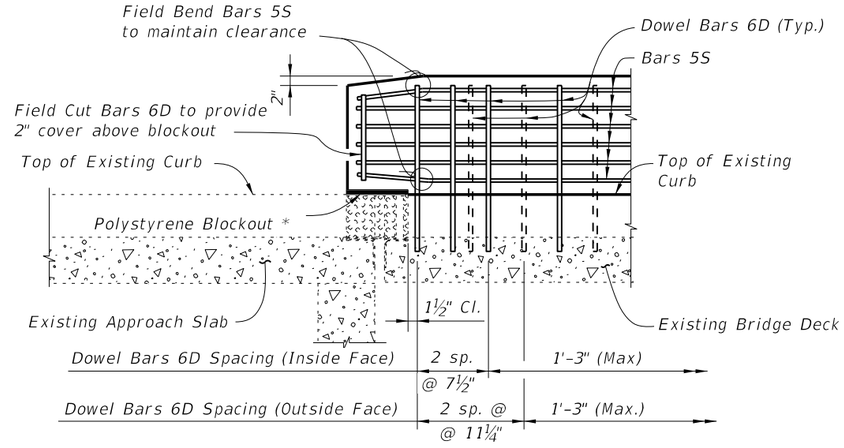

PARTIAL ELEVATION OF RAILING SHOWING SLIDING PLATE JOINT AT BEGIN OR END BRIDGE
(Scheme 1 shown, Schemes 2, 3 and 4 similar)
(Guardrail Transition or continuation of Traffic Railing not show for clarity)

C:\d\projects\standards\structures\2013book\00480-1of2.dgn
rd960rh
2:03:41 PM
6/28/2012

LAST REVISION	REVISION	DESCRIPTION:				
07/01/10			FDOT DESIGN STANDARDS 2013	TRAFFIC RAILING - (VERTICAL FACE RETROFIT) GENERAL NOTES & DETAILS	INDEX NO. 480	SHEET NO. 1

CONVENTIONAL REINFORCING STEEL BENDING DIAGRAM

BILL OF REINFORCING STEEL

MARK	SIZE	LENGTH	INDEX NO.	NOTE NOS.
A	4	AS REQD.	482 ONLY	3
B	1" Ø	2'-0"	481 THRU 483	2 & 5
C	4	2'-0"	481 THRU 484	1, 2 & 3
D	6	AS REQD.	481 THRU 484	2 & 3
E	5	7'-4"	484 ONLY	1 & 3
F	5	4'-3"	484 ONLY	3
G	4	AS REQD.	484 ONLY	3
L	4	4'-1"	481 THRU 483	1 & 3
M	4	4'-3"	482 ONLY	1 & 3
N	4	2'-5"	482 ONLY	1 & 3
S	5	AS REQD.	481 THRU 484	2, 3 & 4

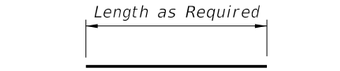

BARS 4A, B, 6D, 5F, 4G & 5S

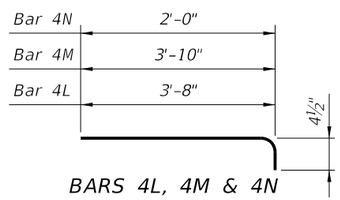

BARS 4L, 4M & 4N

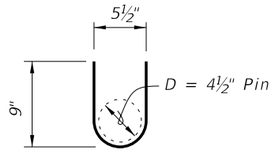

BARS 4C
(12 required per open joint)

REINFORCING STEEL NOTES:
1. All bar dimensions in the bending diagrams are out to out.
2. The reinforcement for the railing on a retaining wall shall be the same as detailed for a bridge deck.
3. All reinforcing steel in the Vertical Face Retrofit Railing shall have a 2" minimum cover.
4. Bars 5S may be continuous or spliced at the construction joints. Bar splices for Bars 5S shall be a minimum of 2'-0".
5. Expansion Dowel Bars B shall be ASTM A36 smooth round bar and hot-dip galvanized in accordance with the Specifications.

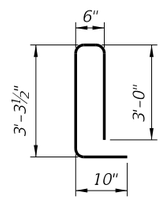

BARS 5E
(Typical Section)

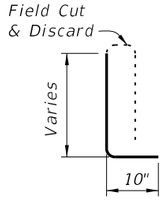

BARS 5E
(Tapered End Transition)

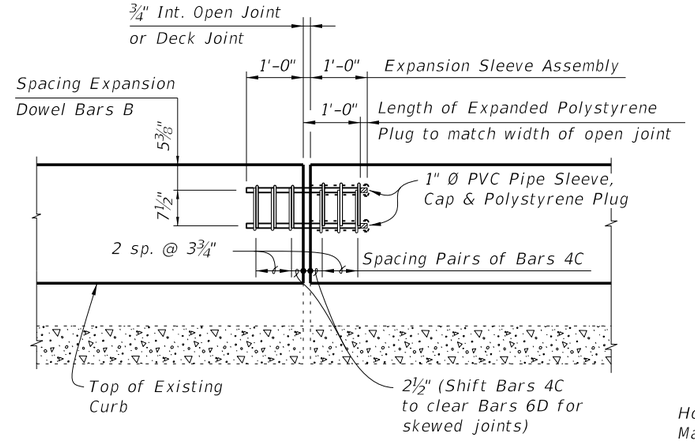

OPEN JOINT EXPANSION DOWEL DETAIL
(Railing Reinforcing Not Shown For Clarity)

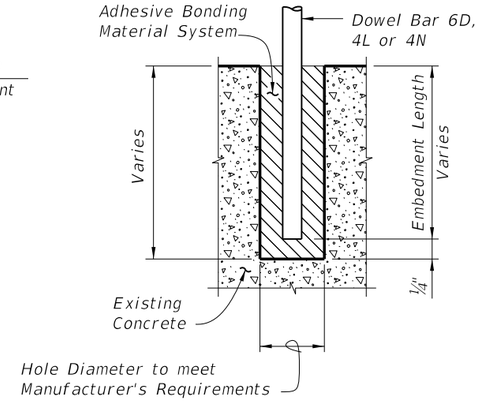

DOWEL DETAIL

Dowel Installation Notes:
1. Shift dowel holes to clear if the existing reinforcement is encountered.
2. See individual Standards Index Nos. 481 thru 484 for required embedment length of Bars 6D, 4L or 4N.

* ½" Preformed Joint Filler at top of Existing Curb shall extend beyond the joint material (Silicone, poured rubber, armored neoprene seal or sliding plates) as shown to prevent concrete intrusion during railing casting and shall be placed so as not to restrict in any way normal joint movement.

** See individual Standard Index Nos. 481 thru 484 for spacing of Bars 6D.

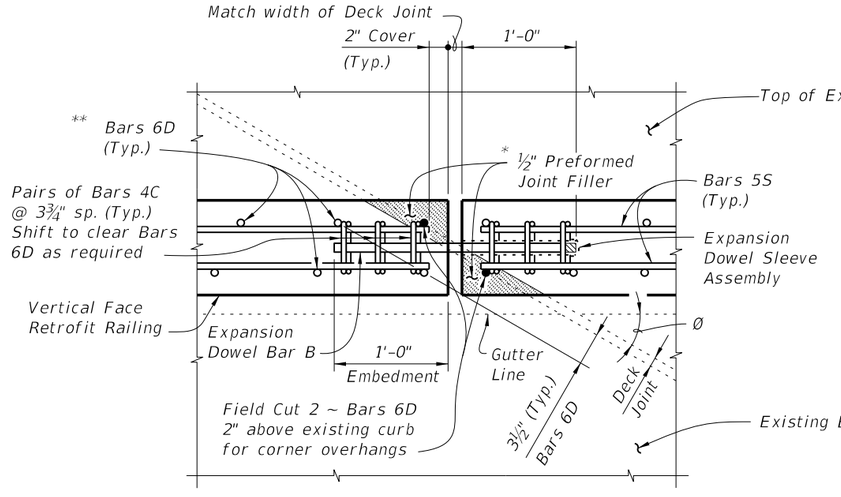

PARTIAL PLAN OF RAILING (SKEW ANGLE Ø LESS THAN 70°)
(Skewed Deck Joint at Begin or End Bridge Shown, Skewed Deck Joint at Intermediate Pier or Bent Similar)

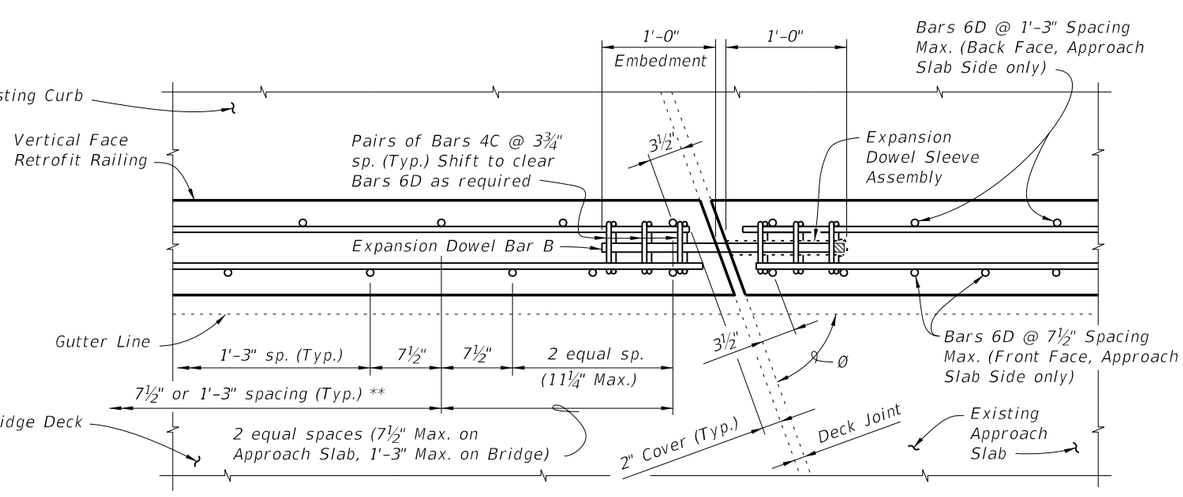

PARTIAL PLAN OF RAILING (SKEW ANGLE Ø = 70° OR GREATER)
(Skewed Deck Joint at Begin or End Bridge Shown, Skewed Deck Joint at Intermediate Pier or Bent Similar)

SKEW DETAIL

LAST REVISION	REVISION	DESCRIPTION:				
07/01/09			FDOT DESIGN STANDARDS 2013	TRAFFIC RAILING - (VERTICAL FACE RETROFIT) GENERAL NOTES & DETAILS	INDEX NO. 480	SHEET NO. 2

C:\d\projects\standards\structures\2013book\00480-2of2.dgn rd960rh 2:03:44 PM 6/28/2012

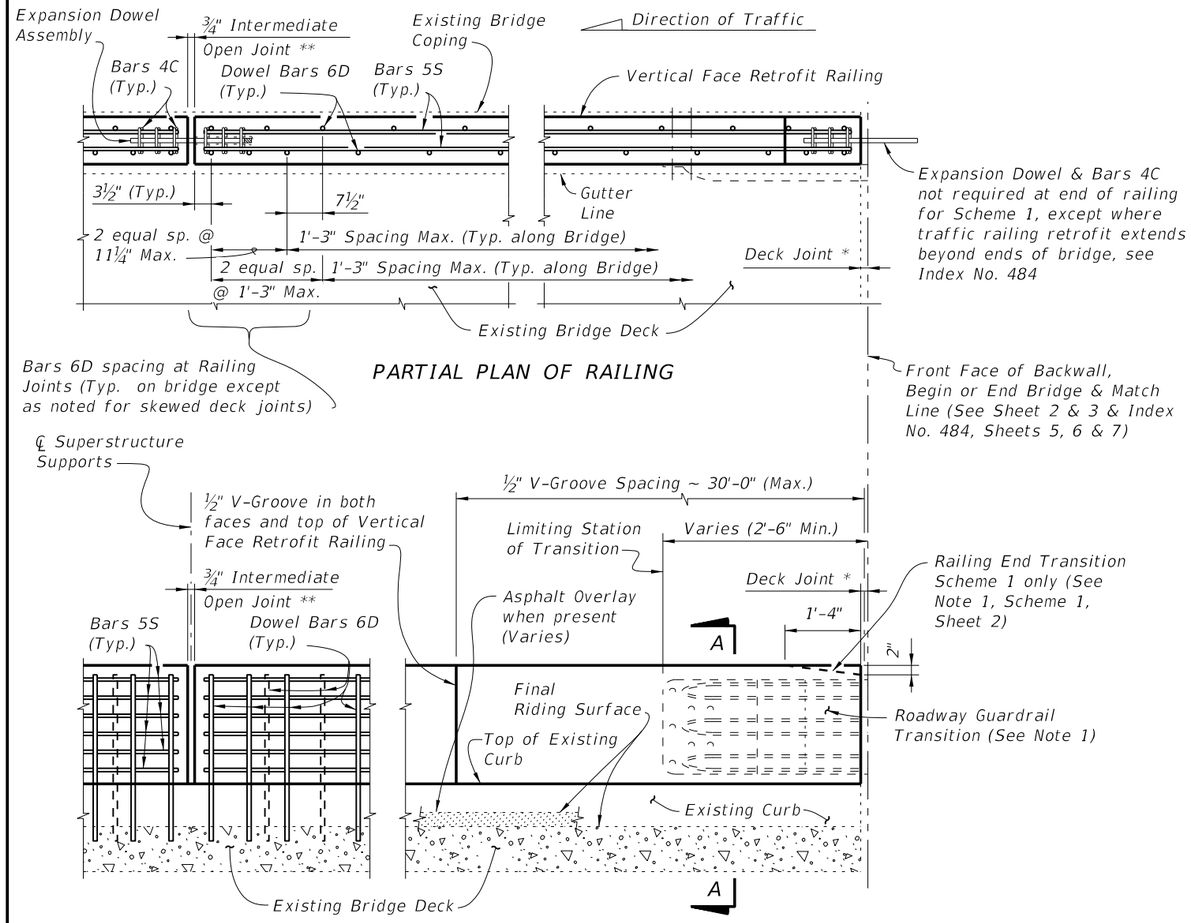

PARTIAL PLAN OF RAILING

PARTIAL ELEVATION OF INSIDE FACE OF RAILING
(Expansion Dowel Assemblies & Bars 4C not shown for clarity)

TYPICAL TREATMENT OF RAILING ALONG BRIDGE

NOTES:

1. On approach end provide a Roadway Guardrail Transition, Index No. 402 (as shown) or other site specific treatment. See Roadway Plans for limiting station of Roadway Guardrail Transition or other site specific treatment. If limiting station of Roadway Guardrail Transition is on the bridge, attach Thrie Beam Terminal Connector to railing as shown above. If limiting station of Roadway Guardrail Transition is along the Wing Wall, see Schemes 2 or 3, Index No. 481, Sheet 2 and 3. On skewed bridges, if the skew along the deck joint extends across the width of the railing, the 2'-6" minimum dimension shall apply to both the front and back face of the railing. For treatment of trailing end see Roadway Plans. If vertical face retrofit extends beyond bridge and approach slab ends, see Index No. 484 for treatment and Details.

2. Field cut Bars 5S and Dowel Bars 6D to maintain clearance within Vertical Face Retrofit Railing.

3. Where existing structure has been removed and not encased in new concrete; match adjoining areas and finish flat by grouting or grinding as required. Exposed existing reinforcing steel not encased in new concrete shall be burned off 1" below existing concrete and grouted over.

* Non skewed deck joint shown, actual joint dimensions and orientation vary. For treatment at skewed deck joints see Skew Detail, Index No. 480. Provide open Railing Joints at Deck Expansion Joint locations matching the dimension of the Deck Joint.

** Provide ¾" Intermediate Open Joints at:
(1) – Superstructure supports where slab is continuous.

*** Curb heights vary from 5" Min. to 1'-2" Max.

CROSS REFERENCE:

For General Notes, Estimated Quantities, Dowel Detail, Expansion Dowel Detail, Reinforcing Steel Notes & Bending Diagrams see Index No. 480.

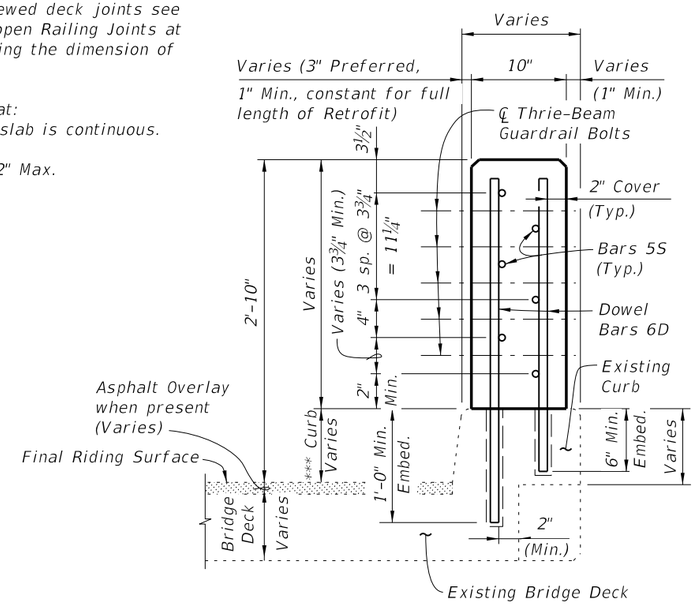

SECTION A-A
TYPICAL SECTION THRU RAILING ON CURB WITH CORBELS

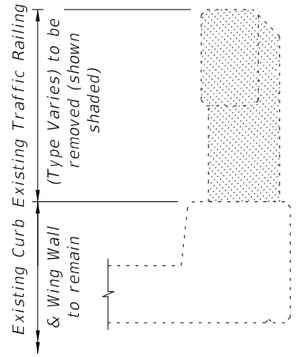

TYPICAL SECTION THRU EXISTING TRAFFIC RAILING SHOWING LIMITS OF REMOVAL
(BRIDGE DECK SHOWN, WING WALL SIMILAR)

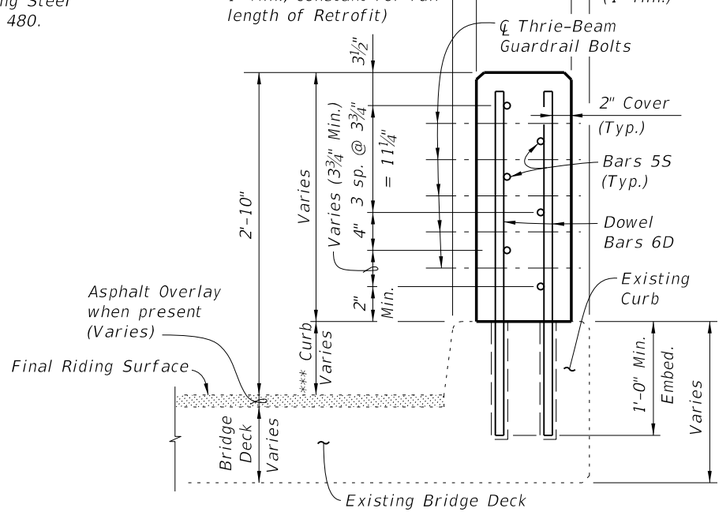

SECTION A-A
TYPICAL SECTION THRU RAILING ON FULL DEPTH CURB (BRIDGE SHOWN, WING WALL SIMILAR)

6/28/2012 2:03:46 PM rd960rh C:\d*projects*standards*structures*2013book*00481-1of3.dgn

LAST REVISION	REVISION	DESCRIPTION:				
07/01/10			FDOT DESIGN STANDARDS 2013	TRAFFIC RAILING - (VERTICAL FACE RETROFIT) NARROW CURB	INDEX NO. 481	SHEET NO. 1

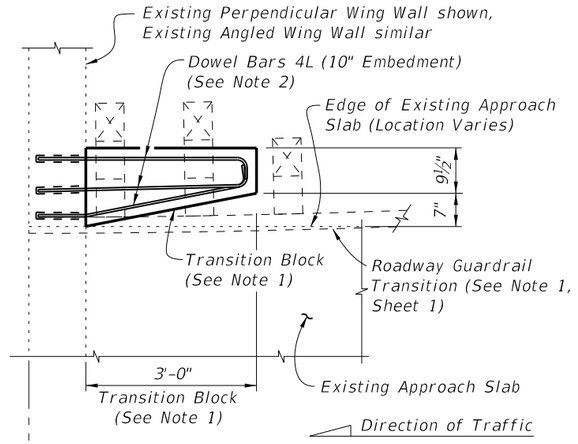

PARTIAL PLAN OF GUARDRAIL

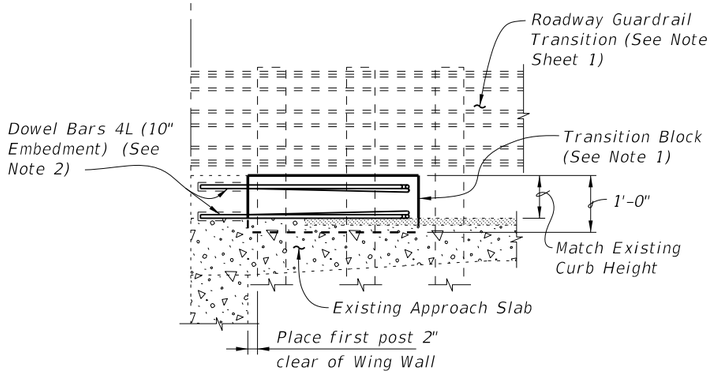

PARTIAL ELEVATION OF INSIDE FACE OF GUARDRAIL

SCHEME 1
RAILING END TREATMENT FOR PERPENDICULAR OR ANGLED WING WALLS

SCHEME 1 NOTES:

1. Provide Transition Block (as shown) or Curb if existing Approach Slab does not have a curb, see Roadway Plans. Shape and height of Transition Block or Curb shall match existing bridge curb. Railing End Transition and Transition Block may be omitted on trailing ends with no opposing traffic.

2. Field bend Dowel Bars 4L within Transition Block as required to maintain 2" top and side clearance and 3" bottom clearance.

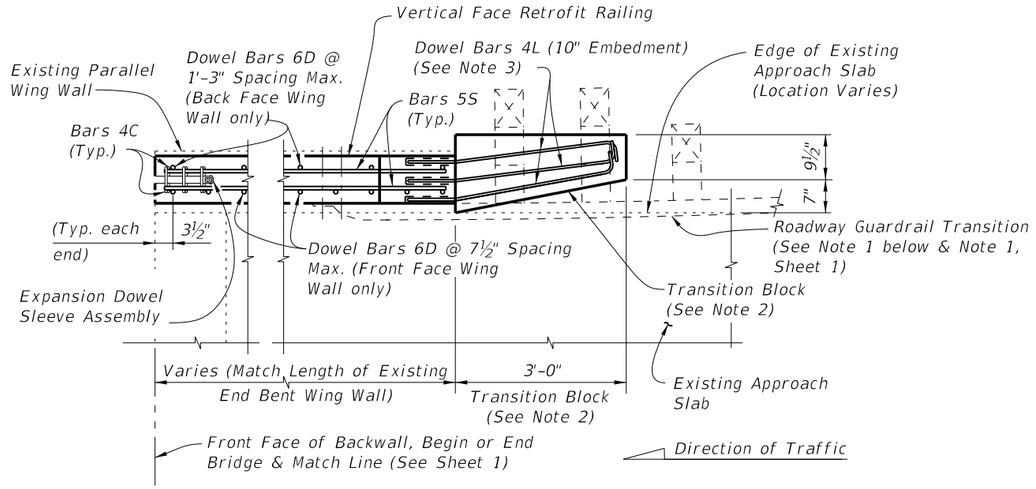

PARTIAL PLAN OF RAILING

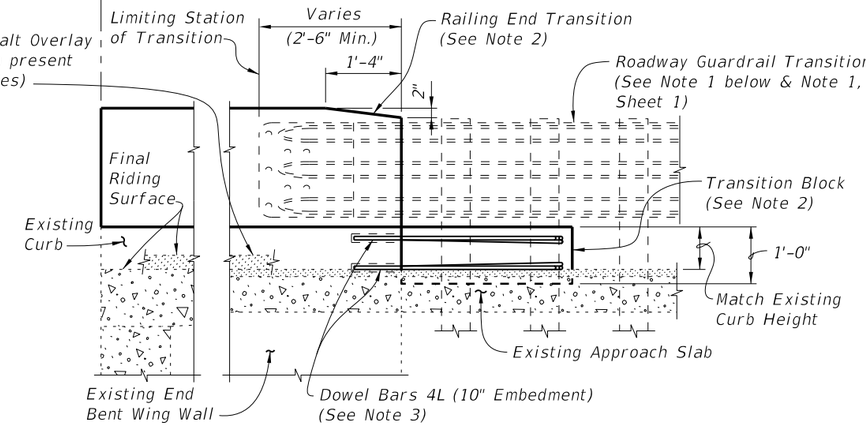

PARTIAL ELEVATION OF INSIDE FACE OF RAILING
(Railing Reinforcing and Expansion Dowel Assemblies not shown for clarity)

SCHEME 2
RAILING END TREATMENT FOR PARALLEL WING WALLS

SCHEME 2 NOTES:

1. See Roadway Plans for limiting station of Roadway Guardrail Transition or other site specific treatment. If limiting station of Roadway Guardrail Transition is along the Wing Wall, attach Thrie-Beam Terminal Connector to railing as shown above. If limiting station of Roadway Guardrail Transition is on the bridge, see Index No. 481, Sheet 1. On skewed bridges, if the skew along the deck joint extends across the width of the railing, the 2'-6" minimum dimension shall apply to both the front and back face of the railing.

2. Provide Transition Block (as shown) or Curb if existing Approach Slab does not have a curb, see Roadway Plans. Shape and height of Transition Block or Curb shall match existing bridge curb. Railing End Transition and Transition Block may be omitted on trailing ends with no opposing traffic.

3. Field bend Dowel Bars 4L within Transition Block as required to maintain 2" top and side clearance and 3" bottom clearance.

C:\d\projects\standards\structures\2013book\00481-2of3.dgn
rd960rh
2:03:49 PM
6/28/2012

LAST REVISION	REVISION	DESCRIPTION:				
07/01/07			FDOT DESIGN STANDARDS 2013	TRAFFIC RAILING - (VERTICAL FACE RETROFIT) NARROW CURB	INDEX NO. 481	SHEET NO. 2

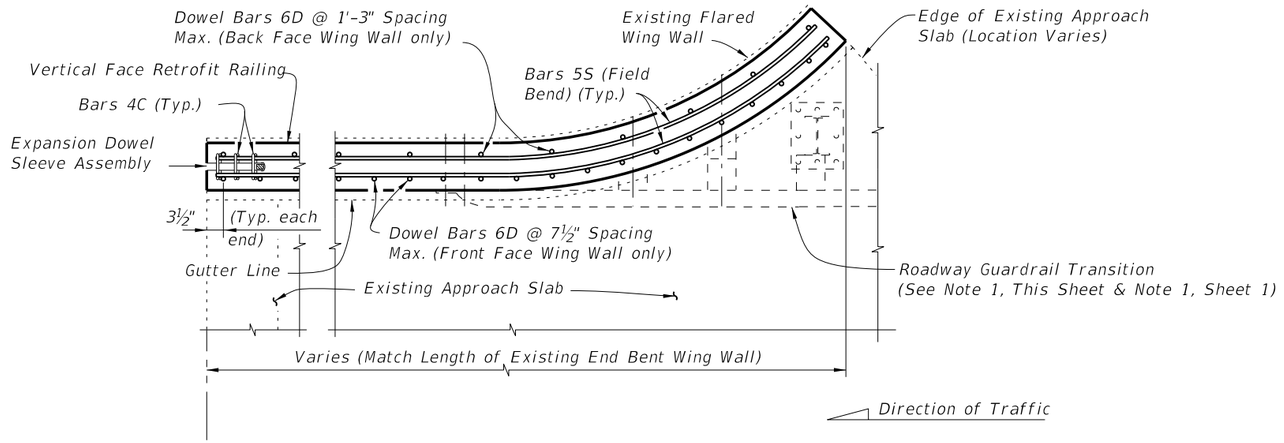

PARTIAL PLAN OF RAILING

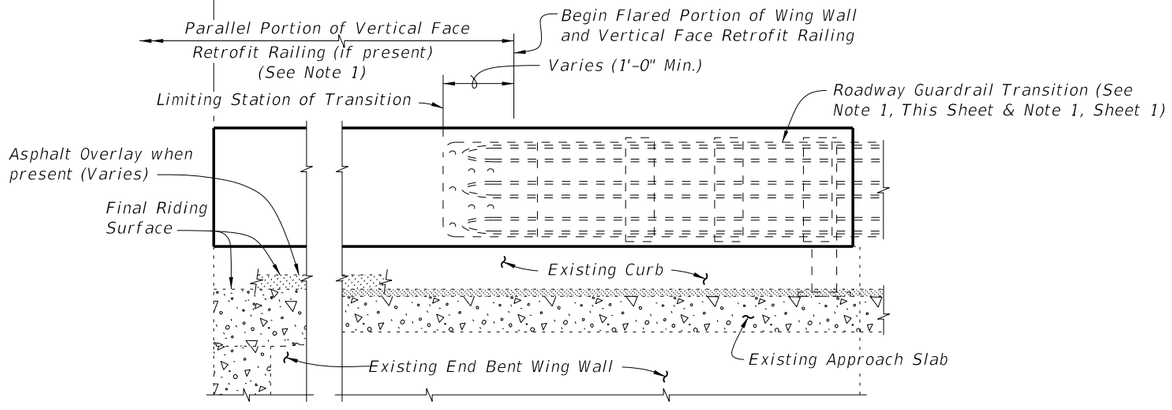

PARTIAL ELEVATION OF INSIDE FACE OF RAILING
(Railing Reinforcing and Expansion Dowel Assemblies not shown for clarity)

SCHEME 3 NOTE:

1. See Roadway Plans for limiting station of Roadway Guardrail Transition or other site specific treatment. If limiting station of Roadway Guardrail Transition is along the Wing Wall, attach Thrie-Beam Terminal Connector to railing as shown above. If limiting station of Roadway Guardrail Transition is on the bridge, see Sheet 1.

SCHEME 3
RAILING END TREATMENT FOR FLARED WING WALLS

C:\d\projects\standards\structures\2013book\00481-3of3.dgn
rd960rh
2:03:51 PM
6/28/2012

LAST REVISION	REVISION	DESCRIPTION:		FDOT DESIGN STANDARDS 2013	TRAFFIC RAILING - (VERTICAL FACE RETROFIT) NARROW CURB	INDEX NO.	SHEET NO.
07/01/07						481	3

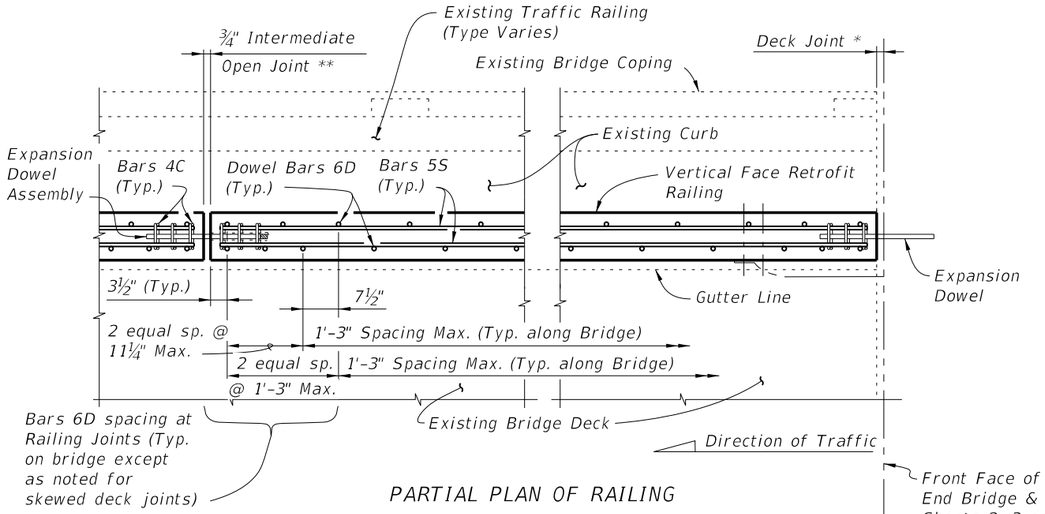

PARTIAL PLAN OF RAILING

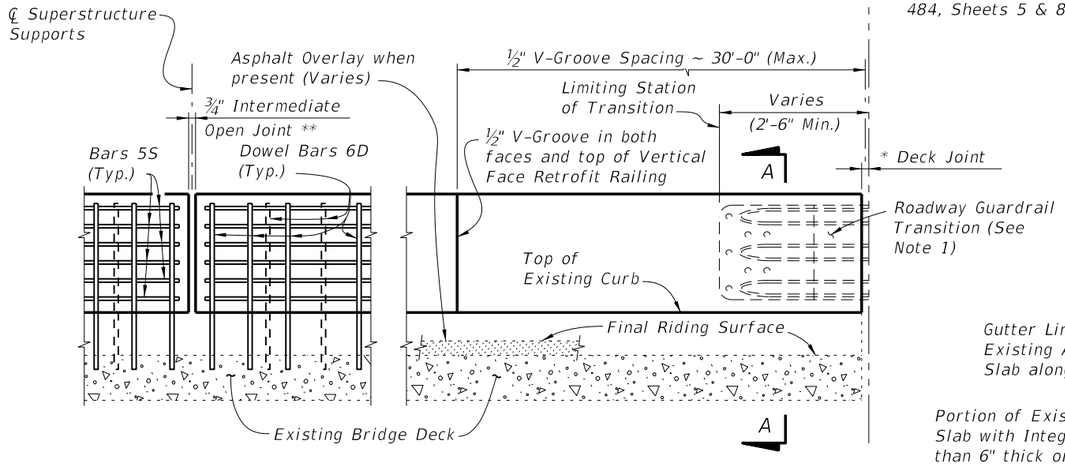

PARTIAL ELEVATION OF INSIDE FACE OF RAILING
(Existing Traffic Railing, Expansion Dowel
Assemblies & Bars 4C not shown for clarity)

TYPICAL TREATMENT OF RAILING ALONG BRIDGE

NOTES:

1. On approach end provide a Roadway Guardrail Transition, Index No. 402 (as shown) or other site specific treatment. See Roadway Plans for limiting station of Roadway Guardrail Transition or other site specific treatment. If limiting station of Roadway Guardrail Transition is on the bridge, attach Thrie-Beam Terminal Connector to railing as shown above. If limiting station of Roadway Guardrail Transition is along the Wing Wall, see Schemes 2, 3, 4 or 5, Sheets 3 and 4. On skewed bridges, if the skew along the deck joint extends across the width of the railing, the 2'-6" minimum dimension shall apply to both the front and back face of the railing. For treatment of trailing end see Roadway Plans. If vertical face retrofit extends beyond bridge and approach slab ends, see Index No. 484 for treatment and Details.

2. Field cut Bars 5S and Dowel Bars 6D to maintain clearance within Vertical Face Retrofit Railing.

3. Where existing structure has been removed and not encased in new concrete; match adjoining areas and finish flat by grouting or grinding as required. Exposed existing reinforcing steel not encased in new concrete shall be burned off 1" below existing concrete and grouted over.

* Non skewed deck joint shown, actual joint dimensions and orientation vary. For treatment at skewed deck joints see Skew Detail, Index No. 480. Provide open Railing Joints at Deck Expansion Joint locations matching the dimension of the Deck Joint.

** Provide ¾" Intermediate Open Joints at:
(1) – Superstructure supports where slab is continuous.

*** Curb heights vary from 5" Min. to 1'-2" Max.

CROSS REFERENCE:

For General Notes, Estimated Quantities, Dowel Detail, Expansion Dowel Detail, Reinforcing Steel Notes & Bending Diagrams see Index No. 480.

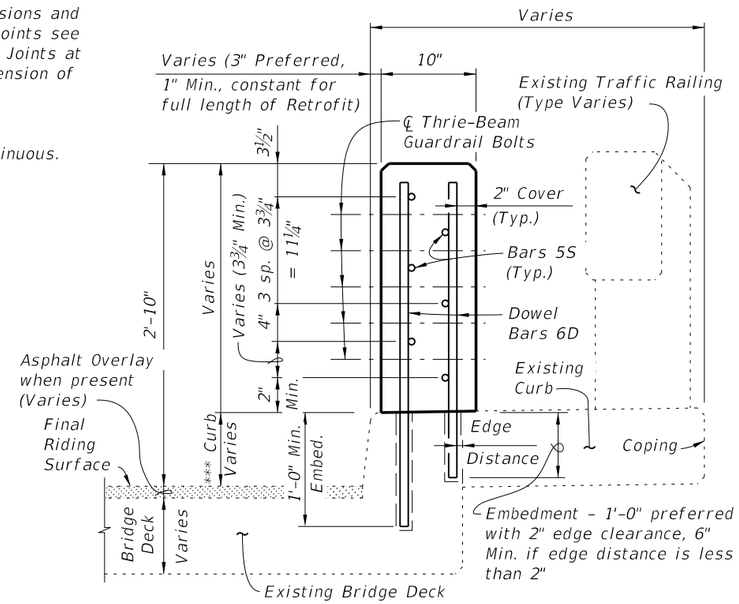

SECTION A-A
TYPICAL SECTION THRU RAILING ON BRIDGE DECK

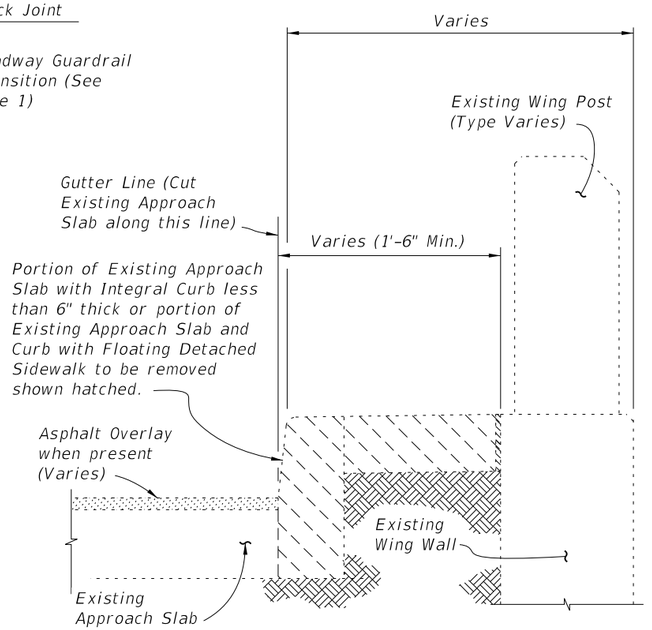

TYPICAL SECTION THRU EXISTING APPROACH
SLAB AND END BENT WING WALL
SHOWING LIMITS OF REMOVAL
(SCHEMES 4 AND 5 ONLY)

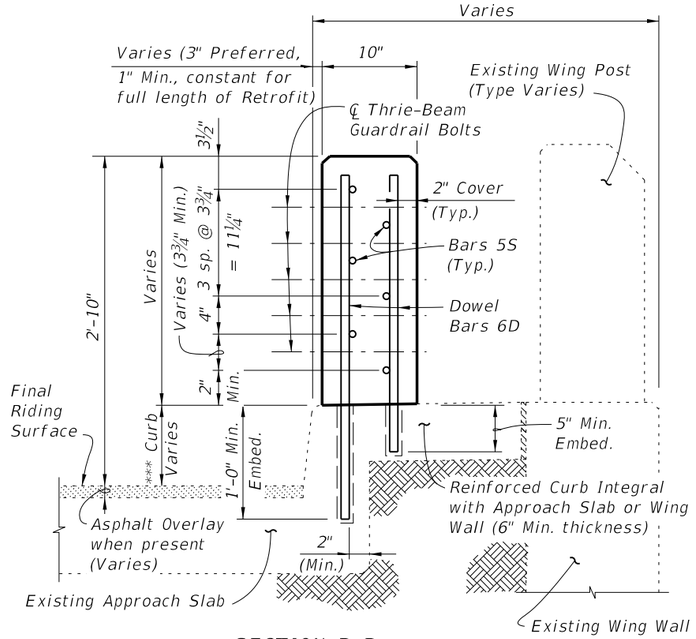

SECTION B-B
TYPICAL SECTION THRU
RAILING ALONG APPROACH SLAB
(SCHEMES 2 AND 3 ONLY)

C:\d\projects\standards\structures\2013book\00482-1of4.dgn
rd960rh
2:03:54 PM
6/28/2012

LAST REVISION	REVISION	DESCRIPTION:		FDOT DESIGN STANDARDS 2013	TRAFFIC RAILING - (VERTICAL FACE RETROFIT) WIDE CURB	INDEX NO.	SHEET NO.
07/01/10						482	1

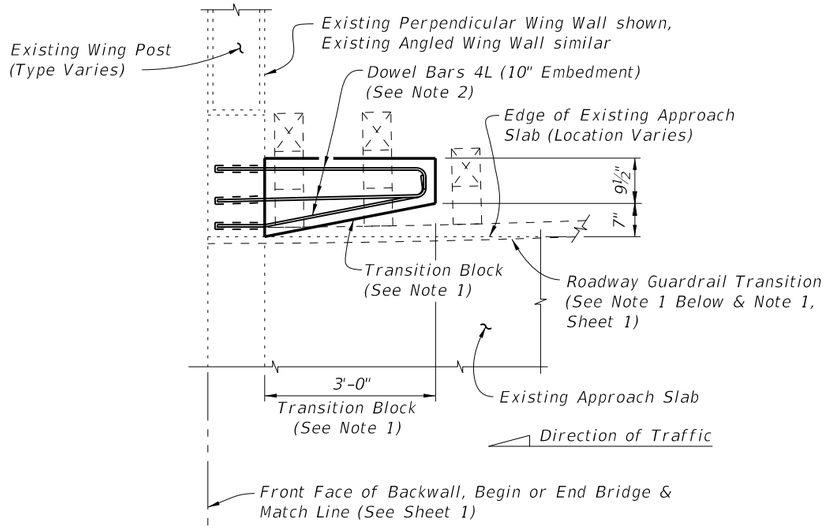

PARTIAL PLAN OF RAILING

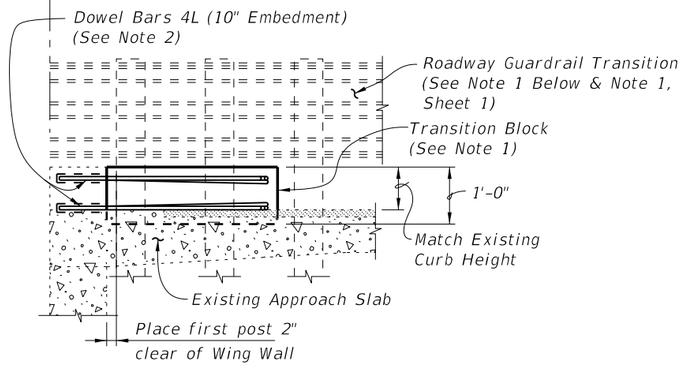

PARTIAL ELEVATION OF INSIDE FACE OF GUARDRAIL
(Existing Wing Post not shown for clarity)

SCHEME 1
RAILING END TREATMENT FOR PERPENDICULAR OR ANGLED WING WALLS

SCHEME 1 NOTES:

1. Provide Transition Block (as shown) or Curb if existing Approach Slab does not have a curb, see Roadway Plans. Shape and height of Transition Block or Curb shall match existing bridge curb. Railing End Transition and Transition Block may be omitted on trailing ends with no opposing traffic.

2. Field bend Dowel Bars 4L within Transition Block as required to maintain 2" top and side clearance and 3" bottom clearance.

3. If a Special Steel Guardrail Post is required for attachment to the top of a sloping Wing Wall, saw cut and remove a wedge shaped portion of the sloping Wing Wall as required to provide a level surface for post installation.

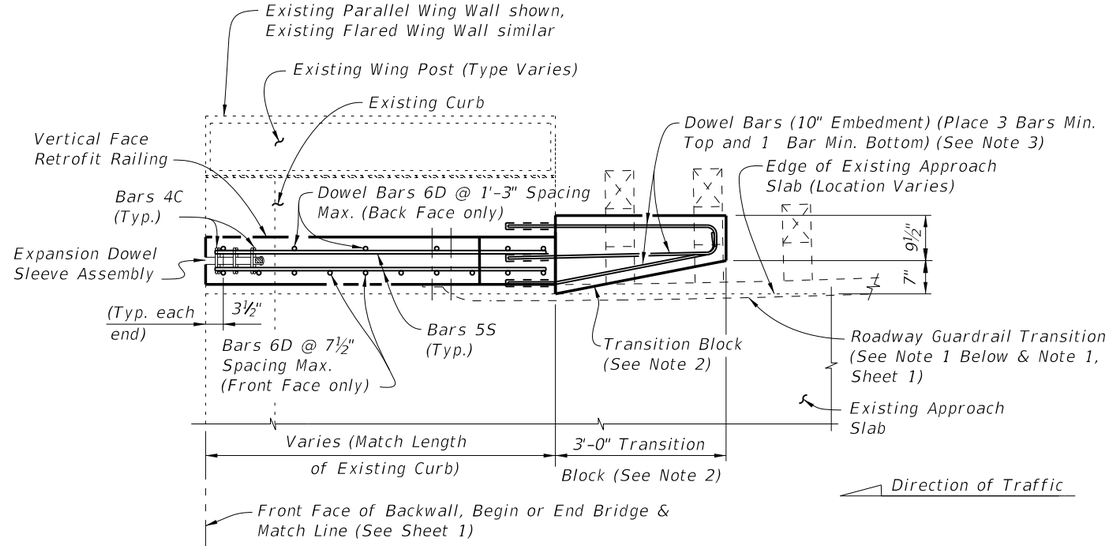

PARTIAL PLAN OF RAILING

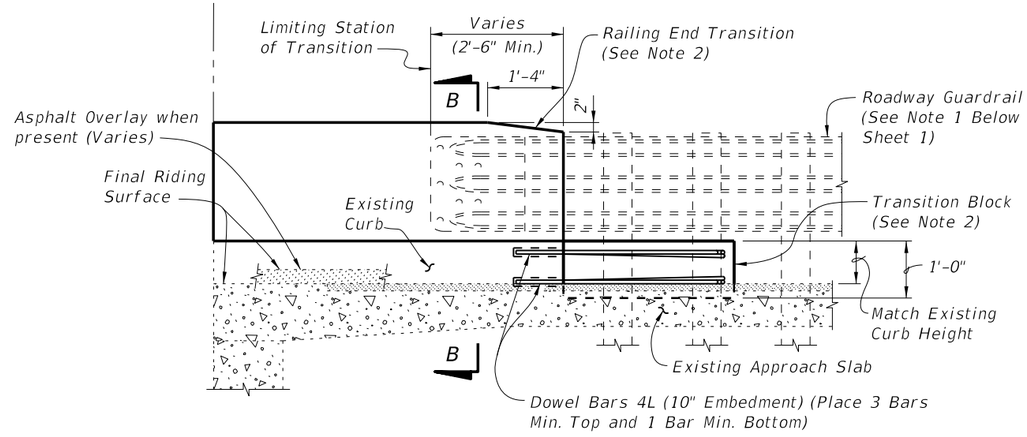

PARTIAL ELEVATION OF INSIDE FACE OF RAILING
(Existing Wing Post, Railing Reinforcing and Expansion Dowel Assemblies not shown for clarity)

SCHEME 2
RAILING END TREATMENT FOR PARALLEL CURBS

SCHEME 2 NOTES:

1. See Roadway Plans for limiting station of Roadway Guardrail Transition or other site specific treatment. If limiting station of Roadway Guardrail Transition is along the Wing Wall, attach Thrie-Beam Terminal Connector to railing as shown above. If limiting station of Roadway Guardrail Transition is on the bridge, see Sheet 1. On skewed bridges, if the skew along the deck joint extends across the width of the railing, the 2'-6" minimum dimension shall apply to both the front and back face of the railing.

2. Provide Transition Block (as shown) or Curb if existing Approach Slab Curb does not extend beyond end of existing End Bent Wing Wall, see Roadway Plans. Shape and height of Transition Block or Curb shall match existing bridge curb. Railing End Transition and Transition Block may be omitted on trailing ends with no opposing traffic.

3. Field bend Dowel Bars 4L within Transition Block as required to maintain 2" top and side clearance and 3" bottom clearance.

C:\d\projects\standards\structures\2013book\00482-2of4.dgn
rd960rh
2:03:56 PM
6/28/2012

LAST REVISION	REVISION	DESCRIPTION:		FDOT DESIGN STANDARDS 2013	TRAFFIC RAILING - (VERTICAL FACE RETROFIT) WIDE CURB	INDEX NO.	SHEET NO.
07/01/05						482	2

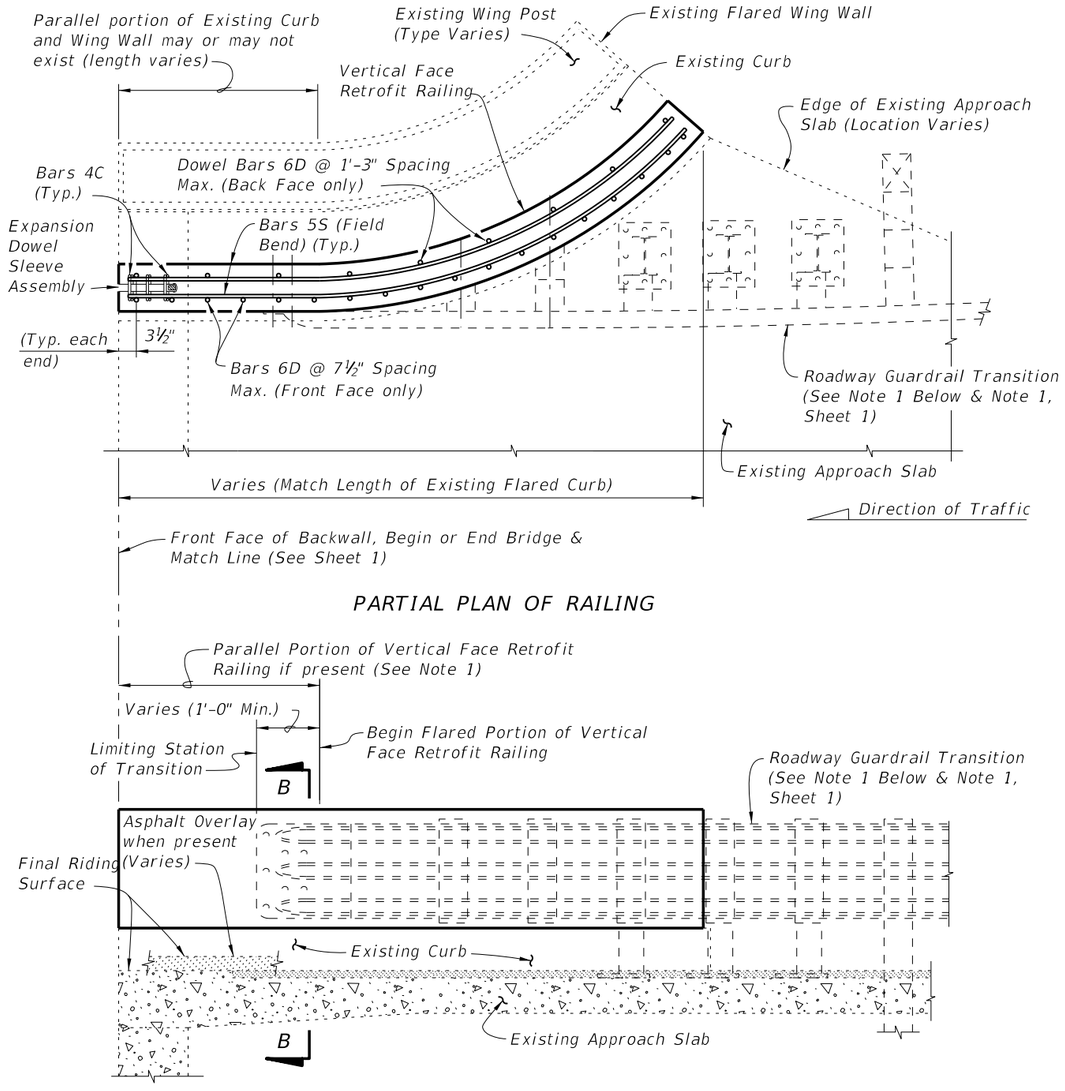

SCHEME 3
RAILING END TREATMENT FOR FLARED CURBS

SCHEME 3 NOTE:

1. See Roadway Plans for limiting station of Roadway Guardrail Transition or other site specific treatment. If limiting station of Roadway Guardrail Transition is along the Wing Wall, attach Thrie-Beam Terminal Connector to railing as shown above. If limiting station of Roadway Guardrail Transition is on the bridge, see Sheet 1.

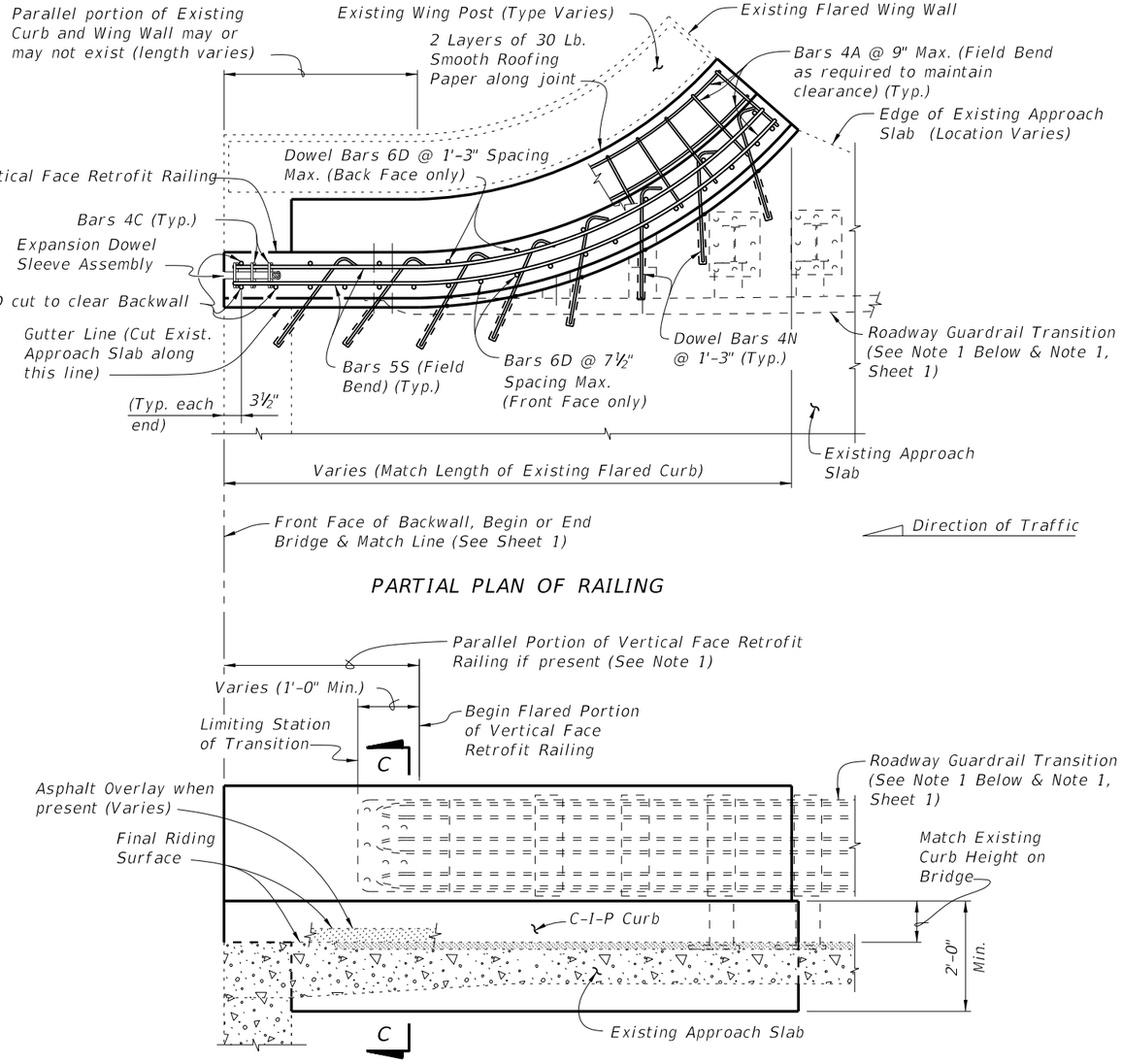

SCHEME 4
RAILING END TREATMENT FOR FLARED CURBS

SCHEME 4 NOTES:

1. See Roadway Plans for limiting station of Roadway Guardrail Transition or other site specific treatment. If limiting station of Roadway Guardrail Transition is along the Wing Wall, attach Thrie-Beam Terminal Connector to railing as shown above. If limiting station of Roadway Guardrail Transition is on the bridge, see Sheet 1.

2. Dowel Bars 4N may be installed on a maximum angle of 45° to the cut edge of the Approach Slab as shown to facilitate drilling of holes and installation of bars.

3. At the Contractor's option, along the length of the Approach Slab curb that is to be replaced, Dowel Bars 6D may be cast in with the new section of curb as shown or they may be installed in drilled holes in the new section of curb using an Adhesive Bonding Material System with a 1'-0" minimum embedment.

C:\d\projects\standards\structures\2013book\00482-3of4.dgn
rd960rh
2:03:59 PM
6/28/2012

LAST REVISION	REVISION	DESCRIPTION:				
07/01/05			FDOT DESIGN STANDARDS 2013	TRAFFIC RAILING - (VERTICAL FACE RETROFIT) WIDE CURB	INDEX NO. 482	SHEET NO. 3

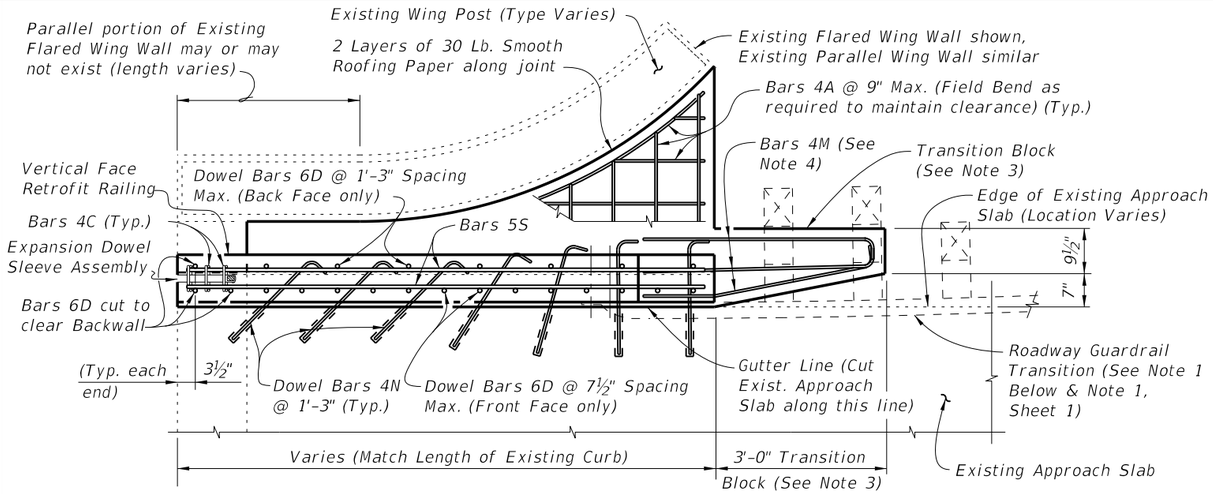

PARTIAL PLAN OF RAILING

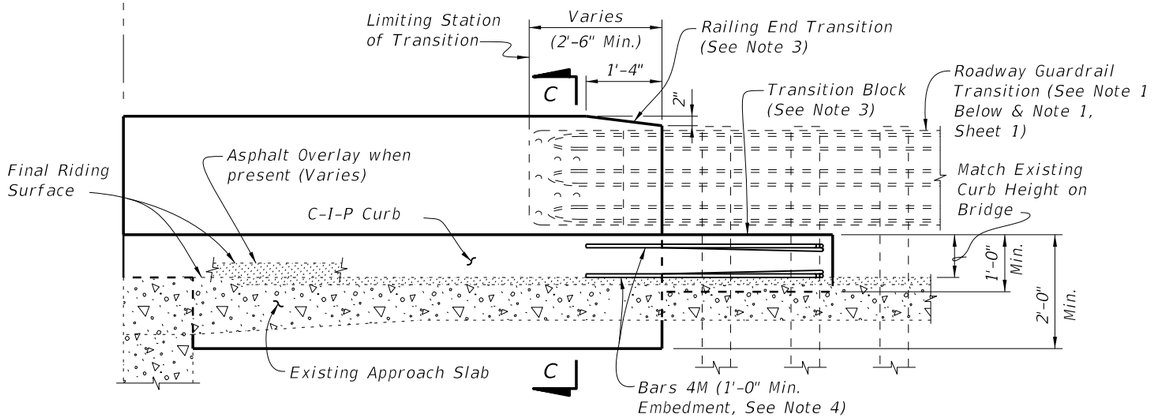

PARTIAL ELEVATION OF INSIDE FACE OF RAILING
(Existing Wing Post, Railing Reinforcing and Expansion Dowel Assemblies not shown for clarity)

SCHEME 5
RAILING END TREATMENT FOR PARALLEL CURBS

*** Curb heights vary from 5" Min. to 10" Max. Match height and shape of existing curb on bridge.

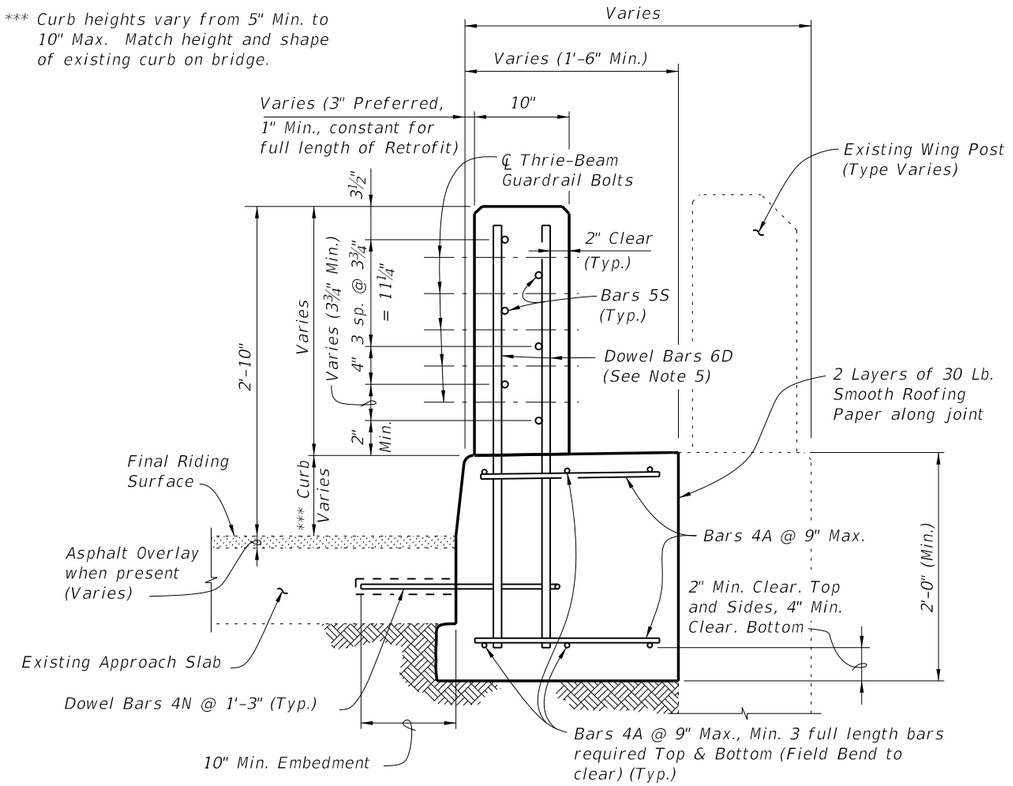

SECTION C-C
TYPICAL SECTION THRU RAILING ALONG APPROACH SLAB
(SCHEME 4 SHOWN, SCHEME 5 SIMILAR)

SCHEME 5 NOTES:

1. See Roadway Plans for limiting station of Roadway Guardrail Transition or other site specific treatment. If limiting station of Roadway Guardrail Transition is along the Wing Wall, attach Thrie-Beam Terminal Connector to railing as shown above. If limiting station of Roadway Guardrail Transition is on the bridge, see Sheet 1.
2. Dowel Bars 4N may be installed on a maximum angle of 45° to the cut edge of the Approach Slab as shown to facilitate drilling of holes and installation of bars.
3. Provide Transition Block (as shown) or Curb if existing Approach Slab Curb does not extend beyond end of existing End Bent Wing Wall, see Roadway Plans. Shape and height of Transition Block or Curb shall match existing bridge curb. Railing End Transition and Transition Block may be omitted on trailing ends with no opposing traffic.
4. Field bend Dowel Bars 4M within Transition Block as required to maintain 2" top and side clearance and 3" bottom clearance.
5. At the Contractor's option, along the length of the Approach Slab curb that is to be replaced, Dowel Bars 6D may be cast in with the new section of curb as shown or they may be installed in drilled holes in the new section of curb using an Adhesive Bonding Material System with a 1'-0" minimum embedment.

C:\d\projects\standards\structures\2013book\00482-4of4.dgn
rd960rh
2:04:01 PM
6/28/2012

LAST REVISION	REVISION	DESCRIPTION:				
07/01/05			FDOT DESIGN STANDARDS 2013	TRAFFIC RAILING - (VERTICAL FACE RETROFIT) WIDE CURB	INDEX NO. 482	SHEET NO. 4

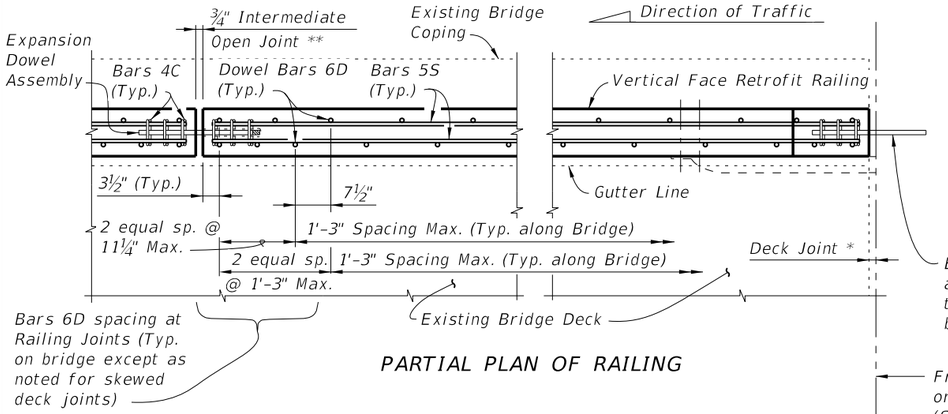

PARTIAL PLAN OF RAILING

* *Non skewed deck joint shown, actual joint dimensions and orientation vary. For treatment at skewed deck joints see Skew Detail, Index No. 480. Provide open Railing Joints at Deck Expansion Joint locations matching the dimension of the Deck Joint.*

** *Provide ¾" Intermediate Open Joints at : (1) – Superstructure supports where slab is continuous.*

*** *Curb heights vary from 5" Min. to 1'-2" Max.*

Expansion Dowel & Bars 4C not required at end of railing for Scheme 1, except where traffic railing retrofit extends beyond ends of bridge, see Index No. 484

Front Face of Backwall, Begin or End Bridge & Match Line (See Sheet 2 and 3 and Index No. 484, Sheets 5, 9 & 10.)

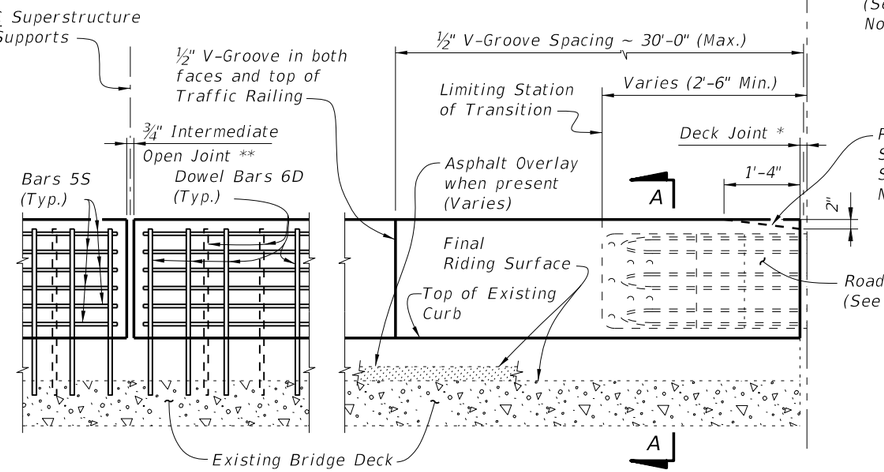

Railing End Transition Scheme 1 only (See Note 1, Scheme 1, Sheet 2, & Index No. 484, Sheet 5, 9 & 10)

Roadway Guardrail Transition (See Note 1)

PARTIAL ELEVATION OF INSIDE FACE OF RAILING
(Expansion Dowel Assemblies and Bars 4C not shown for clarity

TYPICAL TREATMENT OF RAILING ALONG BRIDGE

NOTES:

1. On approach end provide a Roadway Guardrail Transition, Index No. 402 (as shown) or other site specific treatment. See Roadway Plans for limiting station of Roadway Guardrail Transition or other site specific treatment. If limiting station of Roadway Guardrail Transition is on the bridge, attach Thrie-Beam Terminal Connector to railing as shown above. If limiting station of Roadway Guardrail Transition is along the Wing Wall, see Schemes 2 or 3, Sheets 2 & 3. On skewed bridges, if the skew along the deck joint extends across the width of the railing, the 2'-6" minimum dimension shall apply to both the front and back face of the railing. For treatment of trailing end see Roadway Plans. If vertical face retrofit extends beyond bridge and approach slab ends, see Index No. 484 for treatment and Details.
2. Field cut Bars 5S and Dowel Bars 6D to maintain clearance within Vertical Face Retrofit Railing.
3. Where existing structure has been removed and not encased in new concrete; match adjoining areas and finish flat by grouting or grinding as required. Exposed existing reinforcing steel not encased in new concrete shall be burned off 1" below existing concrete and grouted over.

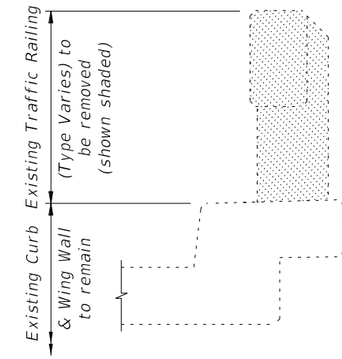

TYPICAL SECTION THRU EXISTING TRAFFIC RAILING
SHOWING LIMITS OF REMOVAL
(BRIDGE DECK SHOWN, WING WALL SIMILAR)

CROSS REFERENCE:

For General Notes, Estimated Quantities, Dowel Detail, Expansion Dowel Detail, Reinforcing Steel Notes & Bending Diagram see Index No. 480.

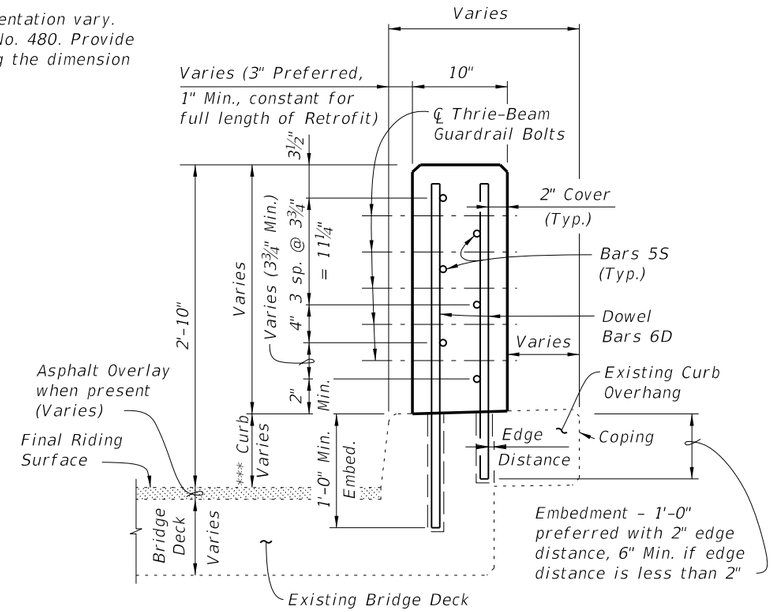

SECTION A-A
TYPICAL SECTION THRU RAILING ON BRIDGE DECK

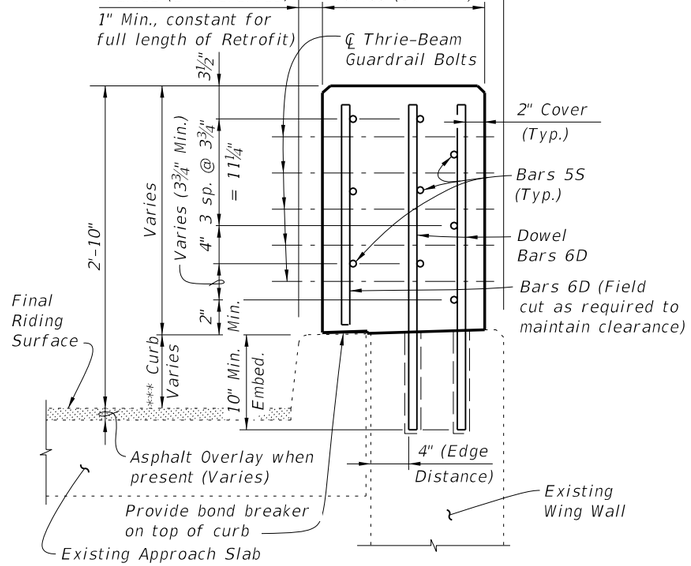

SECTION B-B
TYPICAL SECTION THRU RAILING ON WING WALL

C:\d\projects\standards\structures\2013book\00483-1of3.dgn rd960rh 2:04:04 PM 6/28/2012

LAST REVISION	REVISION	DESCRIPTION:				
07/01/10			FDOT DESIGN STANDARDS 2013	TRAFFIC RAILING - (VERTICAL FACE RETROFIT) INTERMEDIATE CURB	INDEX NO. 483	SHEET NO. 1

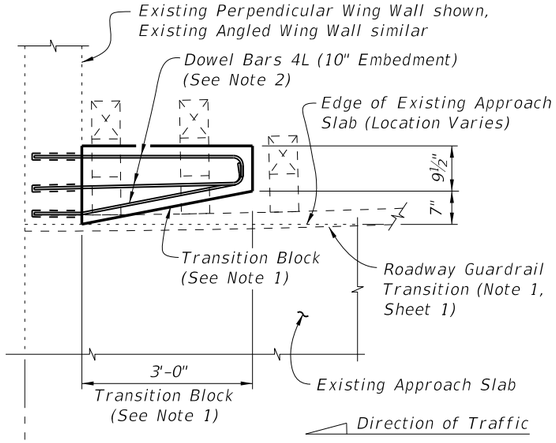

Front Face of Backwall, Begin or End Bridge & Match Line (See Sheet 1)

PARTIAL PLAN OF GUARDRAIL

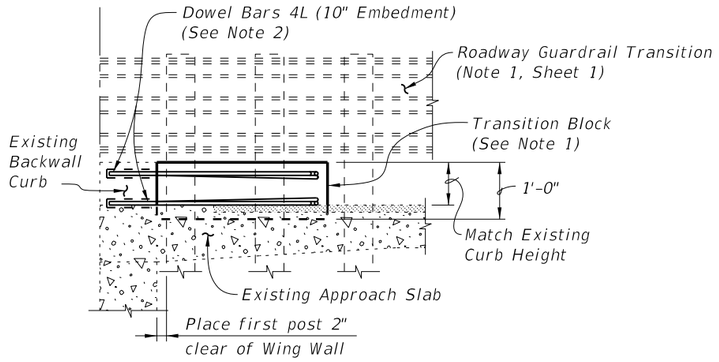

PARTIAL ELEVATION OF INSIDE FACE OF GUARDRAIL

SCHEME 1
RAILING END TREATMENT FOR PERPENDICULAR OR ANGLED WING WALLS

SCHEME 1 NOTES:

1. Provide Transition Block (as shown) or Curb if existing Approach Slab does not have a curb, see Roadway Plans. Shape and height of Transition Block or Curb shall match existing bridge curb. Railing End Transition and Transition Block may be omitted on trailing ends with no opposing traffic.

2. Field bend Dowel Bars 4L within Transition Block as required to maintain 2" top and side clearance and 3" bottom clearance.

3. If a Special Steel Guardrail Post is required for attachment to the top of a sloping Wing Wall, saw cut and remove a wedge shaped portion of the sloping Wing Wall as required to provide a level surface for post installation.

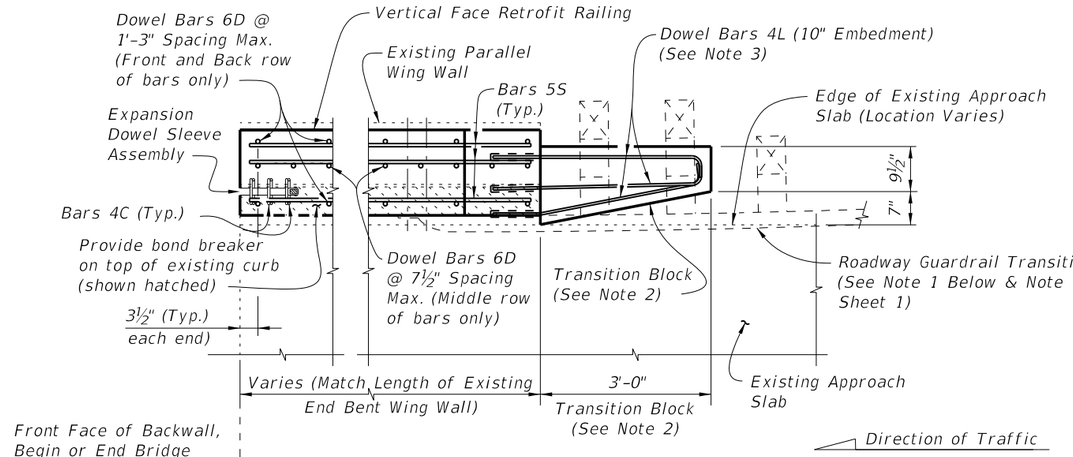

Front Face of Backwall, Begin or End Bridge & Match Line (See Sheet 1)

PARTIAL PLAN OF RAILING

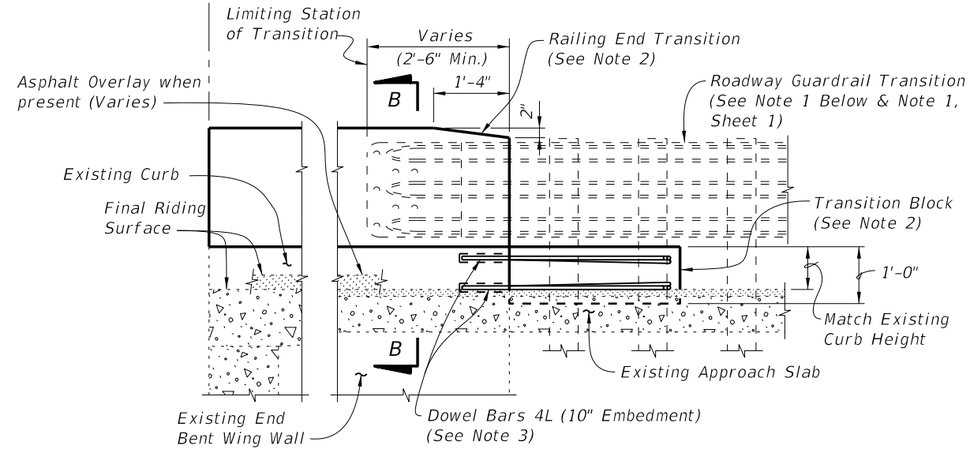

PARTIAL ELEVATION OF INSIDE FACE OF RAILING
(Railing Reinforcing and Expansion Dowel Assemblies not shown for clarity)

SCHEME 2
RAILING END TREATMENT FOR PARALLEL WING WALLS

SCHEME 2 NOTES:

1. See Roadway Plans for limiting station of Roadway Guardrail Transition or other site specific treatment. If limiting station of Roadway Guardrail Transition is along the Wing Wall, attach Thrie-Beam Terminal Connector to railing as shown above. If limiting station of Roadway Guardrail Transition is on the bridge, see Sheet 1. On skewed bridges, if the skew along the deck joint extends across the width of the railing, the 2'-6" mminimum dimension shall apply to both the front and back face of the railing.

2. Provide Transition Block (as shown) or Curb if existing Approach Slab Curb does not extend beyond end of existing End Bent Wing Wall, see Roadway Plans. Shape and height of Transition Block or Curb shall match existing bridge curb. Railing End Transition and Transition Block may be omitted on trailing ends with no opposing traffic.

3. Field bend Dowel Bars 4L within Transition Block as required to maintain 2" top and side clearance and 3" bottom clearance.

C:\d\projects\standards\structures\2013book\00483-2of3.dgn
rd960rh
2:04:09 PM
6/28/2012

LAST REVISION	REVISION	DESCRIPTION:		FDOT DESIGN STANDARDS 2013	TRAFFIC RAILING - (VERTICAL FACE RETROFIT) INTERMEDIATE CURB	INDEX NO.	SHEET NO.
07/01/07						483	2

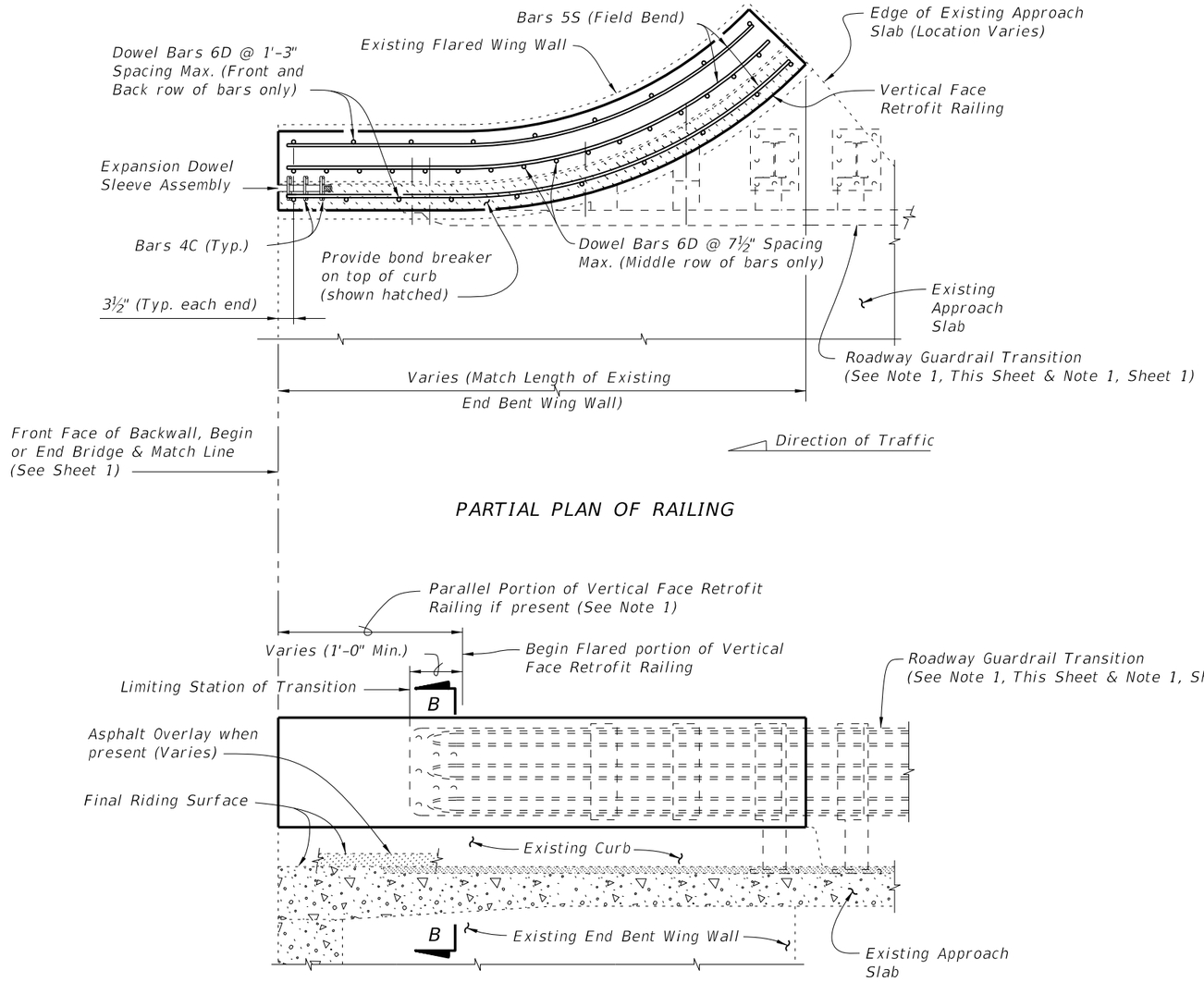

PARTIAL ELEVATION OF INSIDE FACE OF RAILING
(Railing Reinforcing and Expansion Dowel Assemblies not shown for clarity)

SCHEME 3 NOTE:

1. See Roadway Plans for limiting station of Roadway Guardrail Transition or other site specific treatment. If limiting station of Roadway Guardrail Transition is along the Wing Wall, attach Thrie-Beam Terminal Connector to railing as shown above. If limiting station of Roadway Guardrail Transition is on the bridge, see Sheet 1.

SCHEME 3
RAILING END TREATMENT FOR FLARED WING WALLS

C:\d\projects\standards\structures\2013book\00483-3of3.dgn
rd960rh
2:04:11 PM
6/28/2012

LAST REVISION	REVISION	DESCRIPTION:			INDEX NO.	SHEET NO.
07/01/07			FDOT DESIGN STANDARDS 2013	TRAFFIC RAILING - (VERTICAL FACE RETROFIT) INTERMEDIATE CURB	483	3

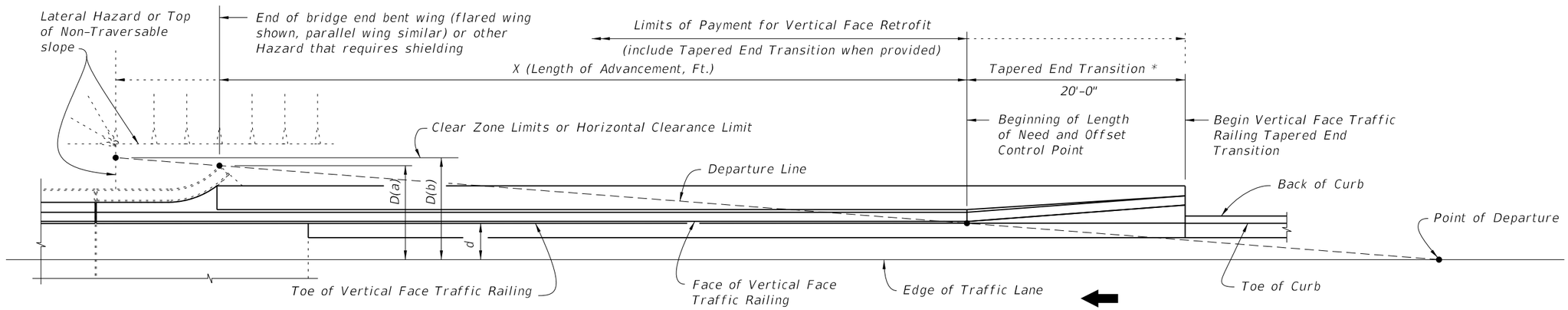

* Guardrail or Crash Cushion may also be shown in the Contract Plans, in lieu of the Tapered End Transition.

SCHEMATIC PLAN VIEW - NEAR LANE APPROACH

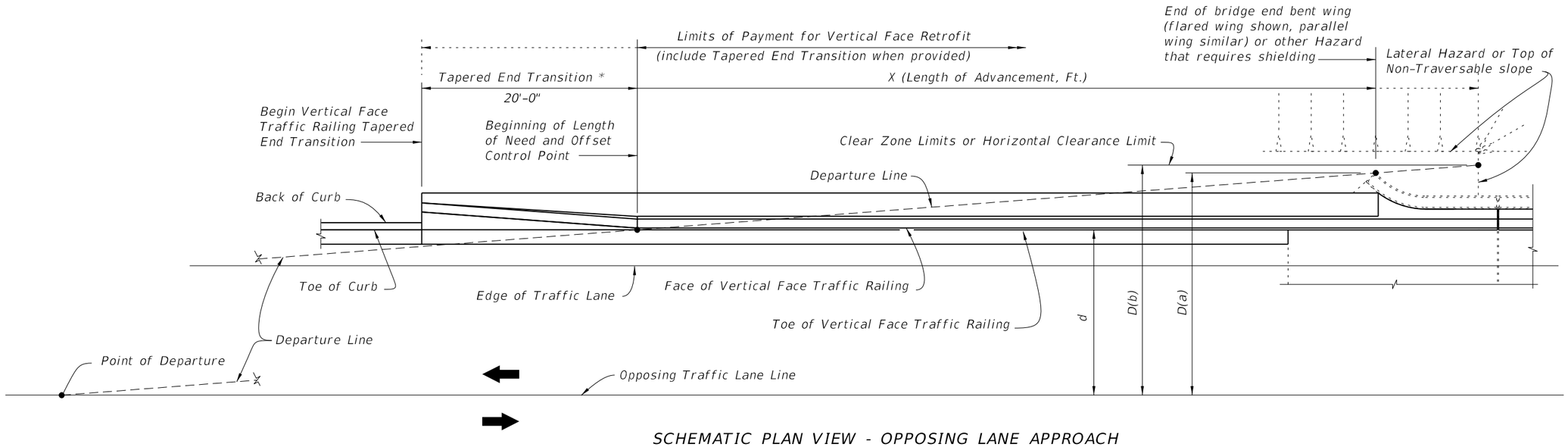

SCHEMATIC PLAN VIEW - OPPOSING LANE APPROACH

Design Speed (mph)	Length of Advancement, Ft. (X)
≤ 40	= 16 (D-d)

Notes:
1. The minimum length of advancement for both near lane and opposing lane approaches is 20'.
2. For Design Speeds greater than 40 mph the Tapered End Transition is not permitted. See Index No. 400 for length of Advancement of guardrail or other project specific end treatments.

LENGTH OF ADVANCEMENT - TAPERED END TRANSITION (40 MPH OR LESS)

DESIGN NOTES:
The Tapered End Transition should only be used when space is limited which precludes the use of a guardrail end treatment or crash cushion.

D = Distance in feet from near edge of near approach traffic lane to either:
(a) the back of hazard, when the hazard is located inside the clear zone or horizontal clearance;
(b) the clear zone or horizontal clearance outer limits, when hazard extends to, or goes beyond the clear zone or horizontal clearance limits.
For left side hazards on two way undivided facilities, "D" is measured from the inside edge of the near approach traffic lane as shown above.

d = Distance in feet from near edge of near approach traffic lane to face of traffic railing (at offset control point). For left side hazards on two-way undivided facilities "d" is measured from the inside edge of the nearest opposing traffic lane as shown above.

CROSS REFERENCES:
For General Notes, Dowel Details, Expansion Dowel Details, Reinforcing Steel Notes and Reinforcing Steel Bending Diagram see Index No. 480.

C:\d\projects\standards\structures\2013book\00484-01of10.dgn rd960rh 2:04:13 PM 6/28/2012

LAST REVISION	REVISION	DESCRIPTION:	FDOT DESIGN STANDARDS 2013	TRAFFIC RAILING - (VERTICAL FACE RETROFIT) SPREAD FOOTING APPROACH	INDEX NO.	SHEET NO.
07/01/09					484	1

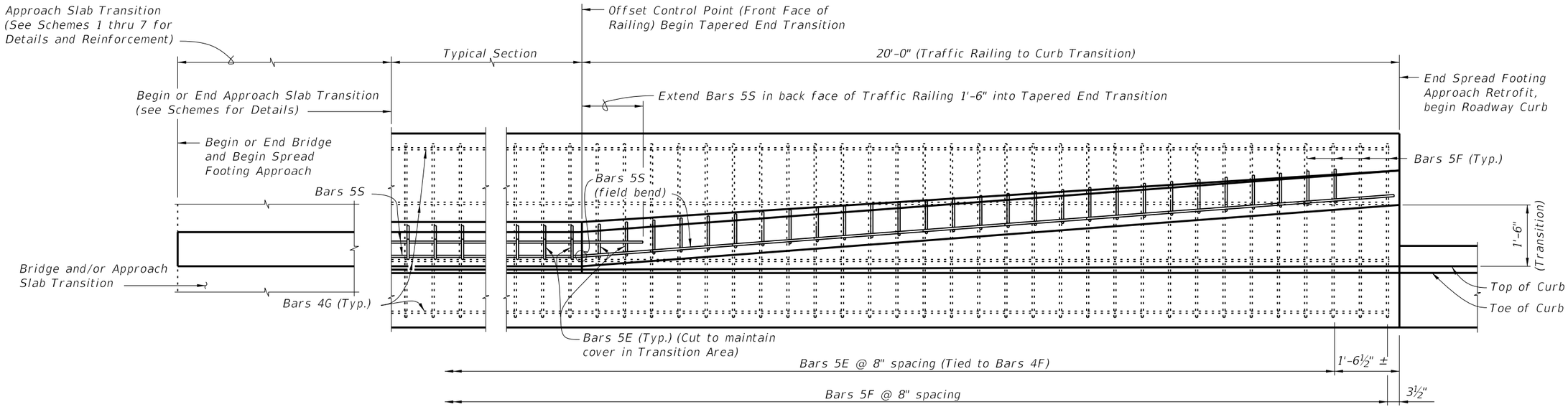

PARTIAL PLAN VIEW

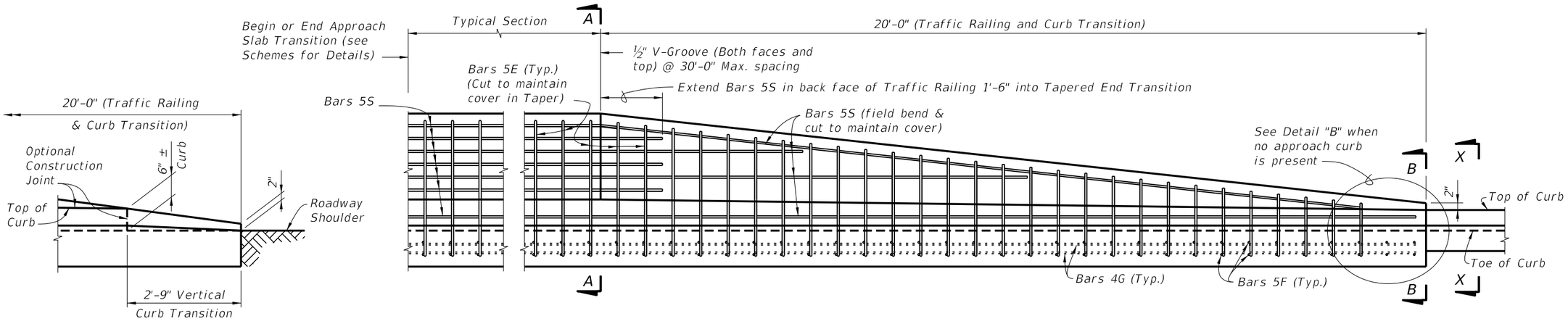

PARTIAL ELEVATION VIEW

DETAIL "B"
TRANSITION TO NON-CURB APPROACH
(Reinforcing Not Shown For Clarity)

TAPERED END TRANSITION

CROSS REFERENCES:
For Section A-A, B-B and X-X see Sheet 4.

LAST REVISION	REVISION	DESCRIPTION:				
07/01/09			FDOT DESIGN STANDARDS 2013	TRAFFIC RAILING - (VERTICAL FACE RETROFIT) SPREAD FOOTING APPROACH	INDEX NO. 484	SHEET NO. 2

C:\d\projects\standards\structures\2013book\00484-02of10.dgn
rd960rh
2:04:16 PM
6/28/2012

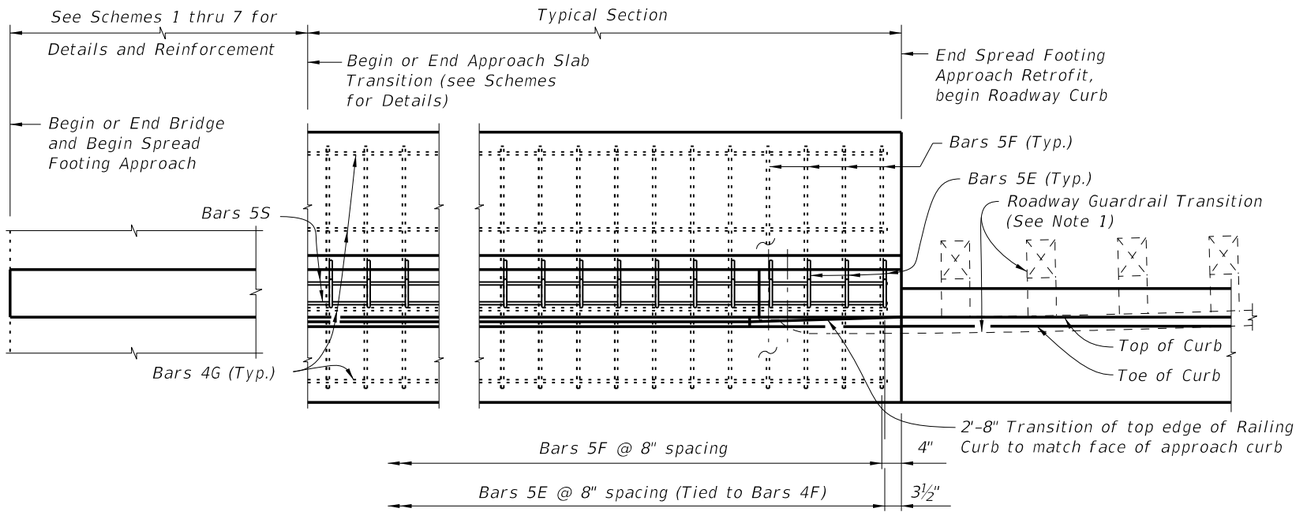

PARTIAL PLAN VIEW
(With Curb Approach)

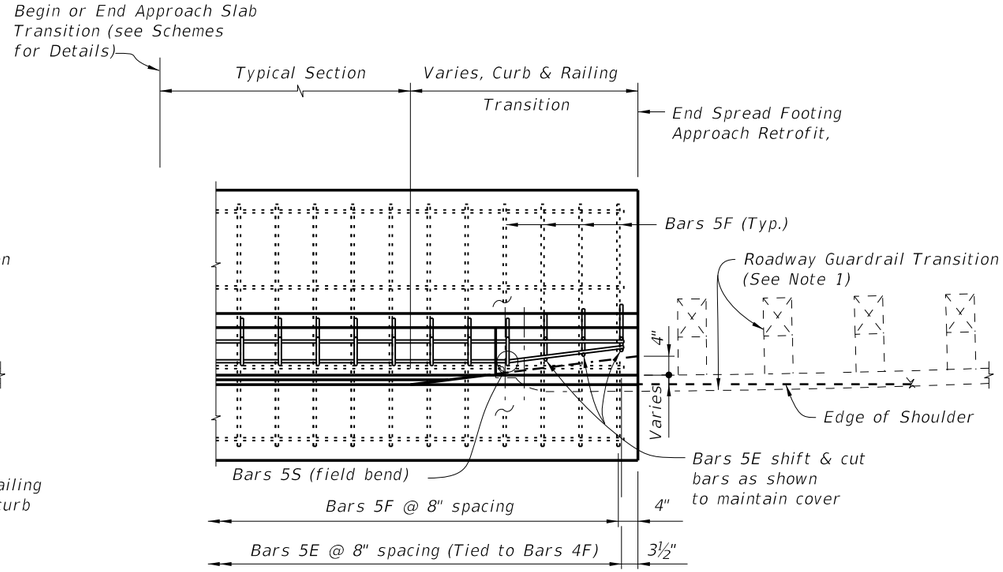

PARTIAL PLAN VIEW
(Without Curb Approach)

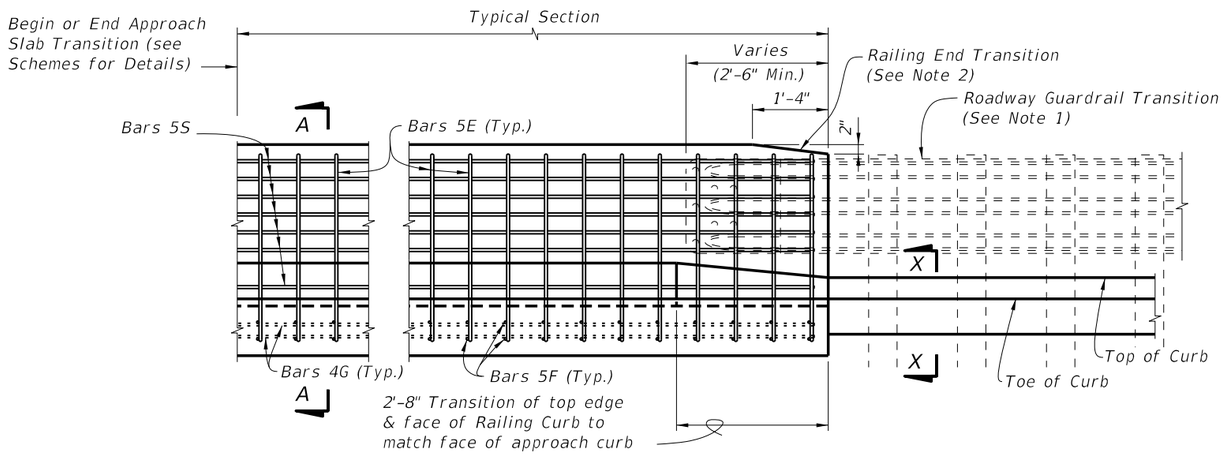

PARTIAL ELEVATION VIEW
(With Curb Approach)

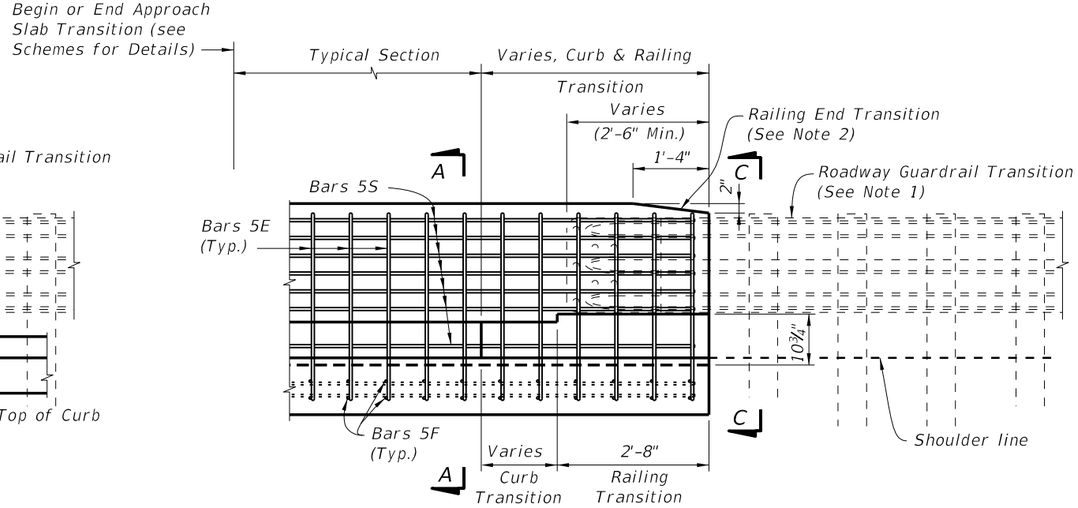

PARTIAL ELEVATION VIEW
(Without Curb Approach)

GUARDRAIL END TRANSITION

NOTES:
1. *On approach end provide a Roadway Guardrail Transition, Index No. 402 (Sheet 16 – Scheme 1) or other site specific treatment. See Roadway Plans for limiting station of Roadway Guardrail Transition or other site specific treatment.*
2. *Provide Railing & Curb Base Transitions (as shown) if curb does not extend beyond end of Spread Footing Approach, see Roadway Plans. Railing End Transition & Railing & Curb Base Transitions may be omitted on trailing ends with no opposing traffic.*

CROSS REFERENCES:
For Section A–A, C–C and X–X see Sheet 4.

C:\d\projects\standards\structures\2013book\00484-03of10.dgn
rd960rh
2:04:18 PM
6/28/2012

LAST REVISION	REVISION	DESCRIPTION:			INDEX NO.	SHEET NO.
07/01/09			FDOT DESIGN STANDARDS 2013	TRAFFIC RAILING - (VERTICAL FACE RETROFIT) SPREAD FOOTING APPROACH	484	3

ESTIMATED TRAFFIC RAILING RETROFIT SPREAD FOOTING APPROACH QUANTITIES		
ITEM	UNIT	QUANTITY
		9" Curb
Concrete – Typical Section	CY/Ft.	0.25
Reinforcing Steel – Typical Section	Lb./Ft.	38
Concrete – 20'-0" Tappered End Transition plus Footing	CY	4.57 Total
Reinforcing Steel – 20'-0" Tapered End Transition plus Footing	Lb.	776 Total

NOTE: Quantities are based on a 9" curb, no curb cross slope.

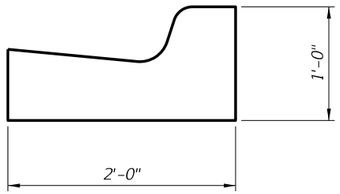

SECTION X-X (TYPICAL CURB, TYPE VARIES, TYPE F SHOWN)
(See Index No. 300 and Plans for Details)

* Match Cross Slope of high side and low side at begin or end bridge or approach slab.

** Match curb height of adjacent bridge and approach slab. Adjust height in Transition area to match adjoining Roadway curb.

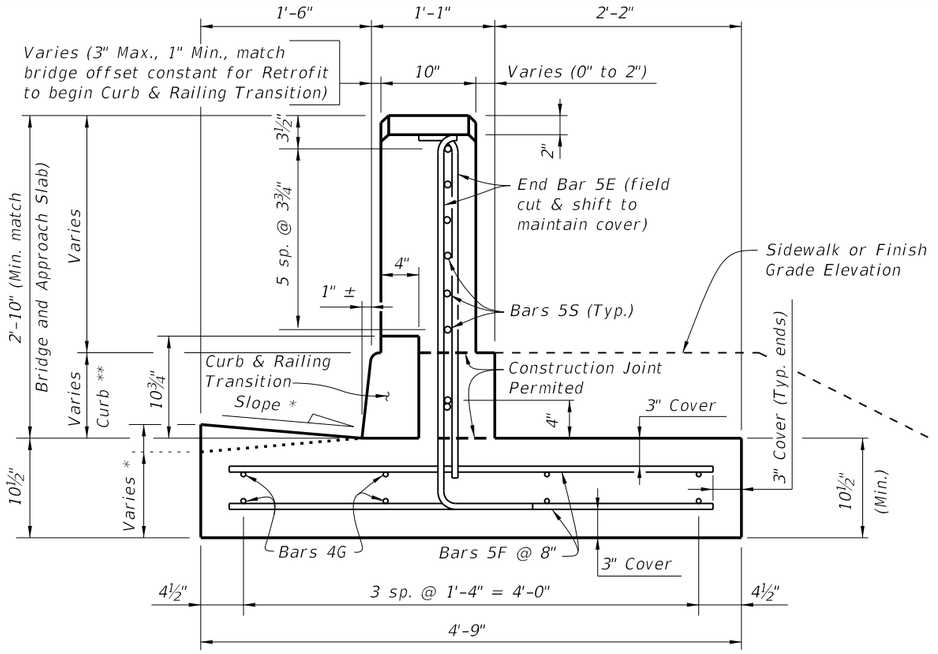

SECTION C-C
(GUARDRAIL END TRANSITION)

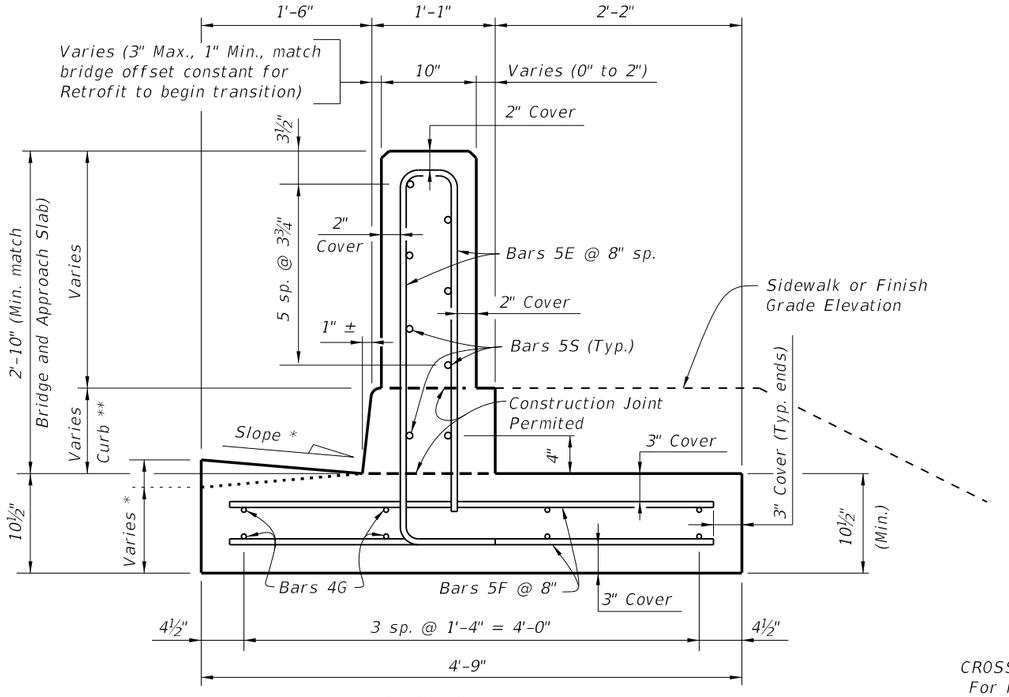

SECTION A-A
TYPICAL SECTION
(9" Curb shown, 6" Curb similar)

CROSS REFERENCES:
For location of Sections A-A, B-B and X-X see Sheet 2.
For location of Section C-C see Sheet 3.

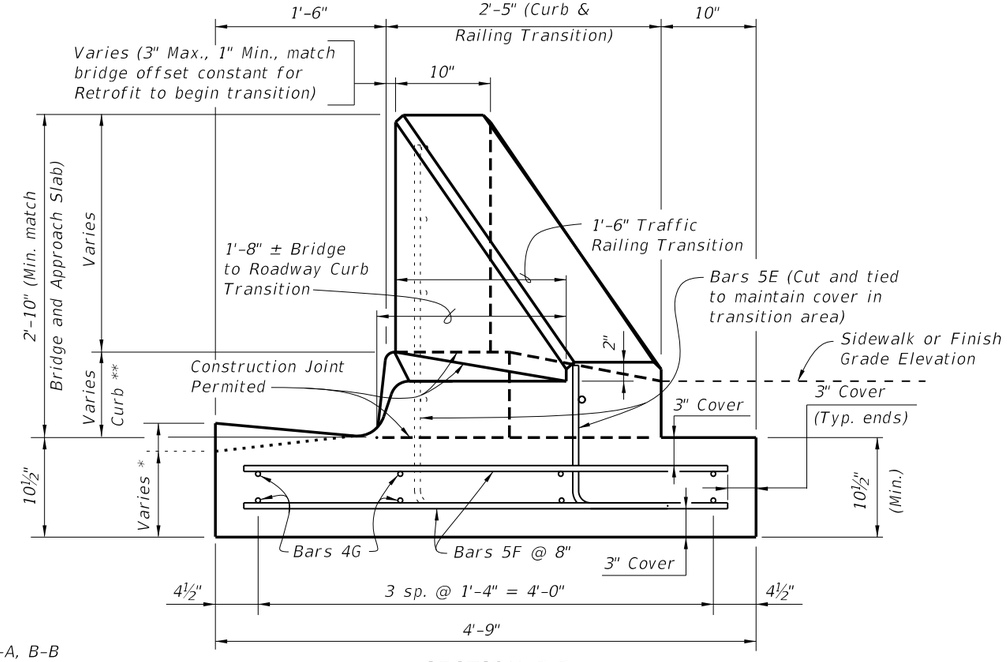

SECTION B-B
TAPERED END TRANSITION
(Bars 5S not shown for clarity)

6/28/2012 2:04:20 PM rd960rh C:\d\projects\standards\structures\2013book\00484-04of10.dgn

LAST REVISION	REVISION	DESCRIPTION:				
07/01/09			FDOT DESIGN STANDARDS 2013	TRAFFIC RAILING - (VERTICAL FACE RETROFIT) SPREAD FOOTING APPROACH	INDEX NO. 484	SHEET NO. 4

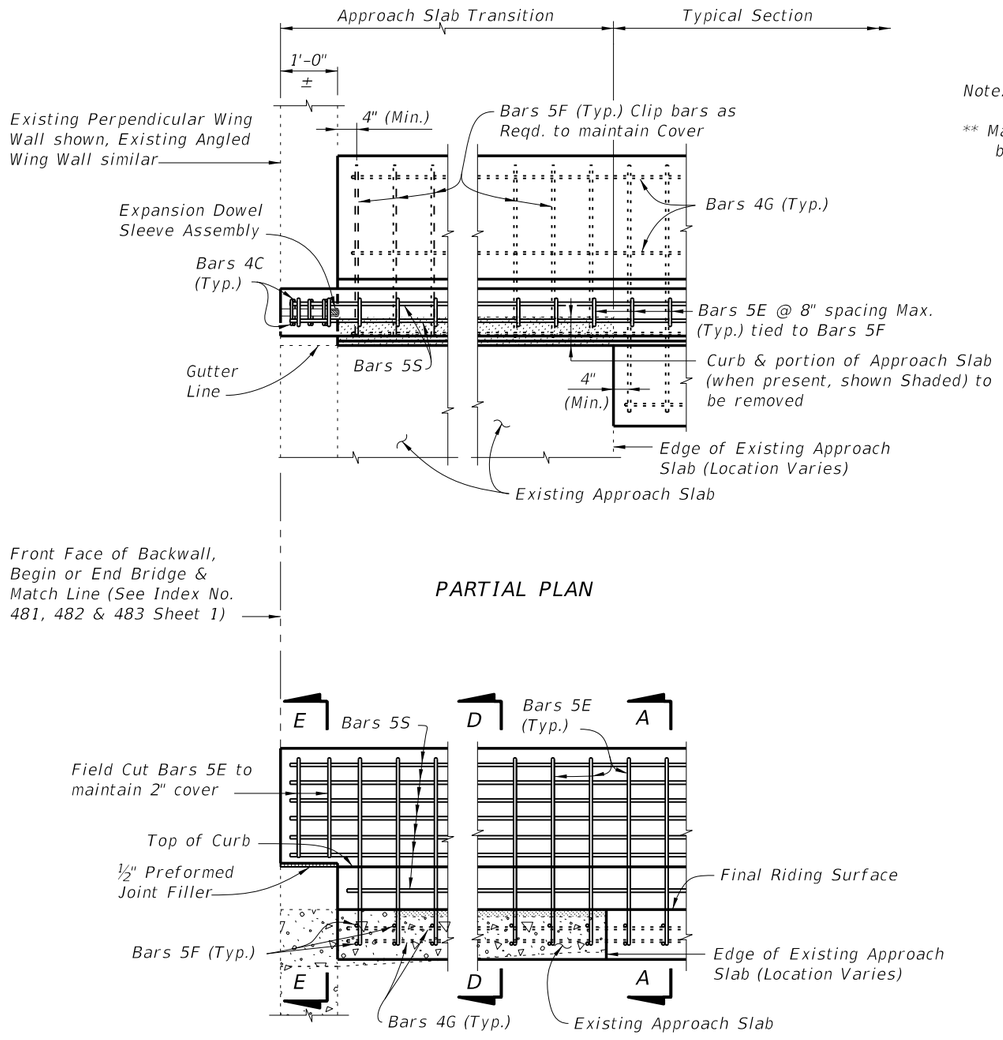

PARTIAL PLAN

PARTIAL ELEVATION OF INSIDE FACE OF RAILING
(Expansion Dowel Assemblies and Bars 4C not shown for clarity)

Note:

** Match curb height of adjacent bridge and approach slab.

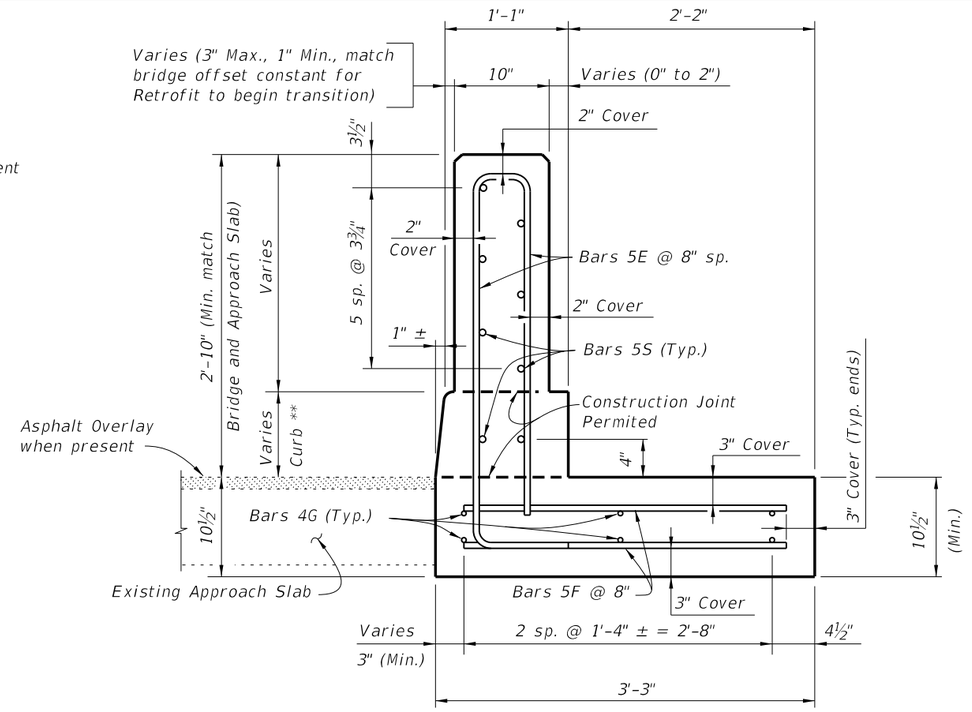

SECTION D-D

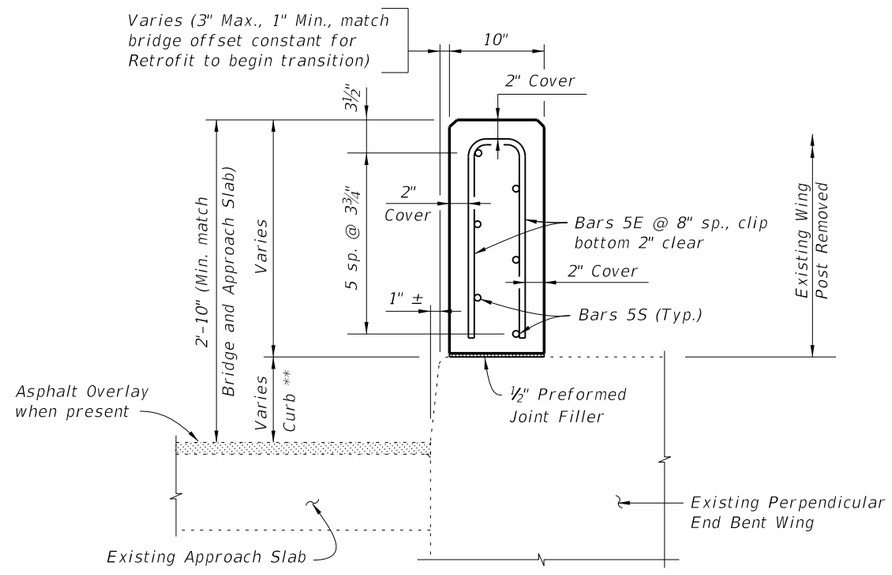

SECTION E-E (NARROW CURB SHOWN, WIDE AND INTERMEDIATE CURBS SIMILAR)

SCHEME 1 ~ MODIFICATION FOR INDEX NO. 481, 482 AND 483 - SCHEME 1

RAILING END TREATMENT FOR PERPENDICULAR OR ANGLED WING WALLS WITH NARROW CURBS (SHOWN), WIDE CURBS AND INTERMEDIATE CURBS (SIMILAR)

CROSS REFERENCE:
For Section A-A see Sheet 4.
For Expansion Dowel Assembly and placement of Dowel Bars 6D Details see Index 480.

C:\d_projects\standards\structures\2013book\00484-05of10.dgn rd960rh 2:04:22 PM 6/28/2012

LAST REVISION	REVISION	DESCRIPTION:		FDOT DESIGN STANDARDS 2013	TRAFFIC RAILING - (VERTICAL FACE RETROFIT) SPREAD FOOTING APPROACH	INDEX NO.	SHEET NO.
07/01/09						484	5

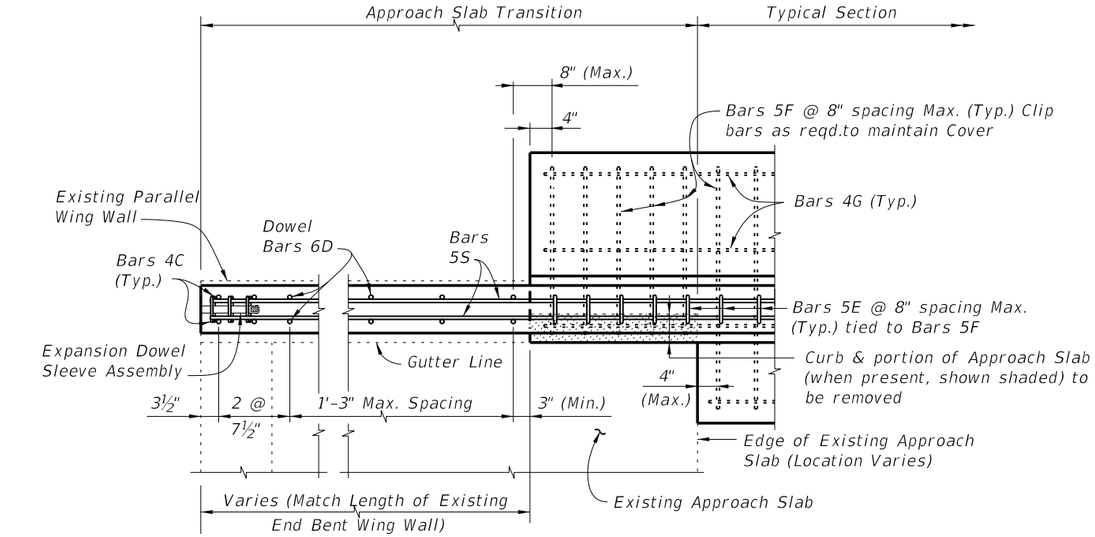

PARTIAL PLAN

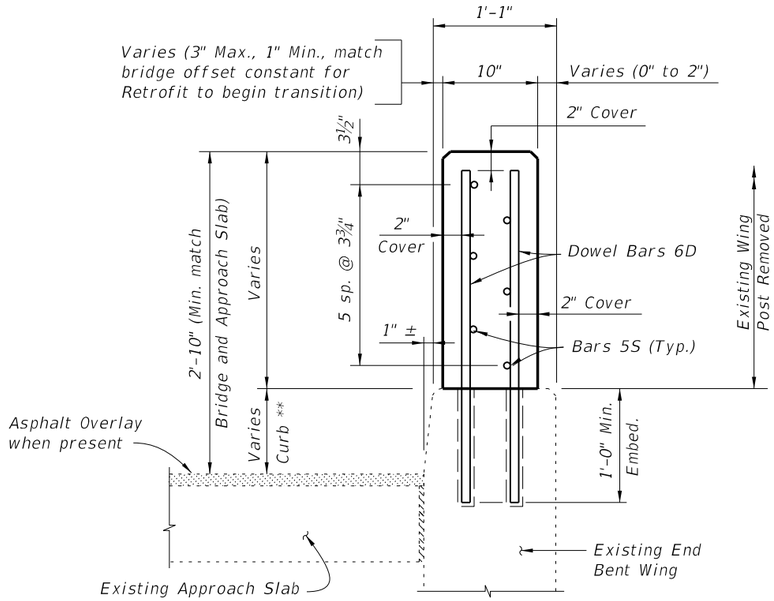

Note:
** Match curb height at adjoining existing end bent wing.

SECTION F-F

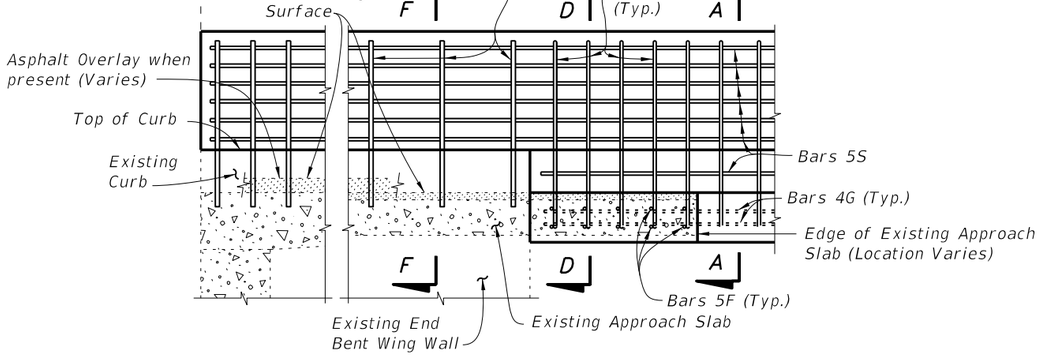

PARTIAL ELEVATION OF INSIDE FACE OF RAILING
(Expansion Dowel Assemblies and Bars 4C not shown for clarity)

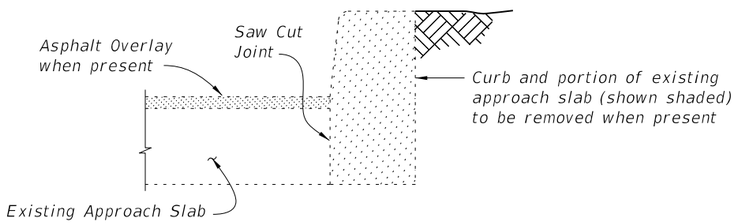

SECTION THRU EXISTING CURB AND
APPROACH SLAB TO BE REMOVED
(Free Standing Curb Similar)

SCHEME 2 ~ MODIFICATION FOR INDEX NO. 481 - SCHEME 2
RAILING END TREATMENT FOR PARALLEL WING WALLS WITH NARROW CURBS

NOTES:
1. Remove existing concrete along saw cut joints. Existing reinforcing steel may be cut at joint or extended into new concrete. Exposed existing reinforcing not encased in new concrete shall be removed 1" below existing concrete surface and grouted over.

CROSS REFERENCES:
For Section A-A see Sheet 4.
For Section D-D see Sheet 5.
For Expansion Dowel Assembly and placement of Dowel Bars 6D Details see Index 480.

LAST REVISION	REVISION	DESCRIPTION:		FDOT DESIGN STANDARDS 2013	TRAFFIC RAILING - (VERTICAL FACE RETROFIT) SPREAD FOOTING APPROACH	INDEX NO.	SHEET NO.
07/01/09						484	6

C:\d\projects\standards\structures\2013book\00484-06of10.dgn
rd960rh
2:04:25 PM
6/28/2012

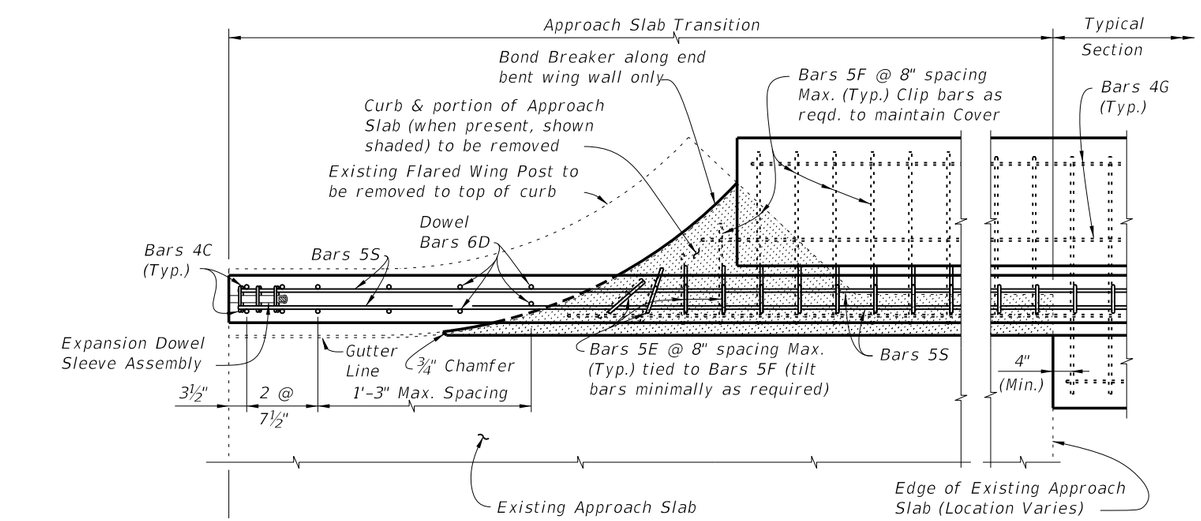

PARTIAL PLAN OF RAILING

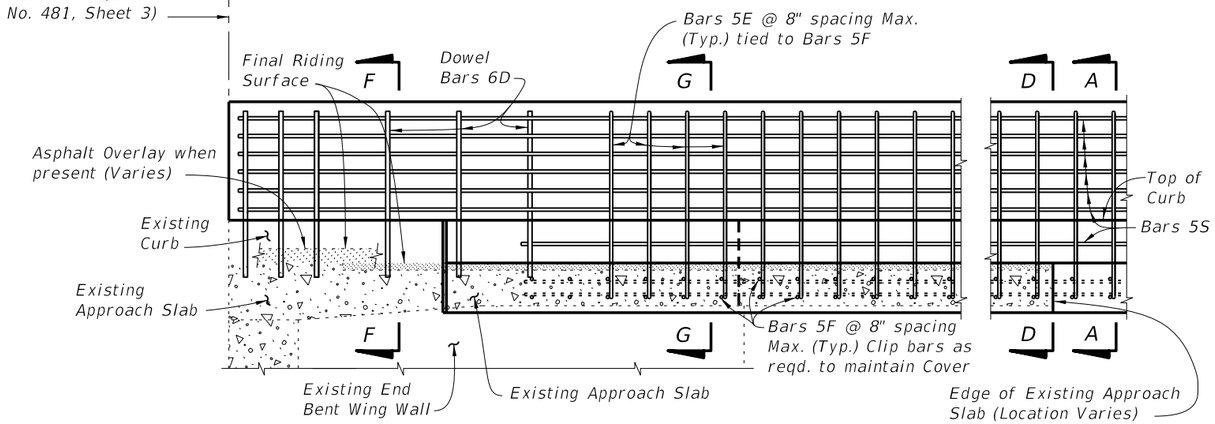

PARTIAL ELEVATION OF INSIDE FACE OF RAILING
(Expansion Dowel Assemblies and Bars 4C not shown for clarity)

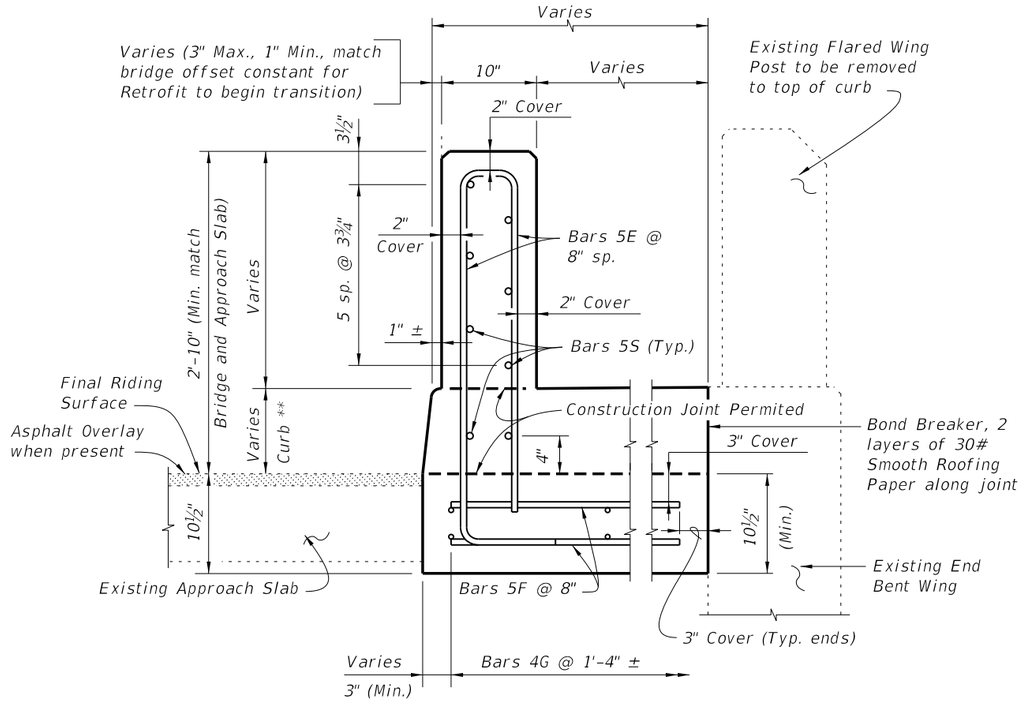

SECTION G-G

Note:
** Match curb height at adjoining existing end bent wing.

CROSS REFERENCES:
For Section A-A see Sheet 4.
For Section D-D see Sheet 5.
For Section F-F see Sheet 6.
For Expansion Dowel Assemblies Details and placement of Dowel Bars 6D see Index 480.

SCHEME 3 ~ MODIFICATION FOR INDEX NO. 481 SCHEME 3
RAILING END TREATMENT FOR FLARED WING WALLS WITH NARROW CURBS

LAST REVISION	REVISION	DESCRIPTION:				
07/01/09			FDOT DESIGN STANDARDS 2013	TRAFFIC RAILING - (VERTICAL FACE RETROFIT) SPREAD FOOTING APPROACH	INDEX NO. 484	SHEET NO. 7

C:\d\projects\standards\structures\2013book\00484-07of10.dgn
rd960rh
2:04:27 PM
6/28/2012

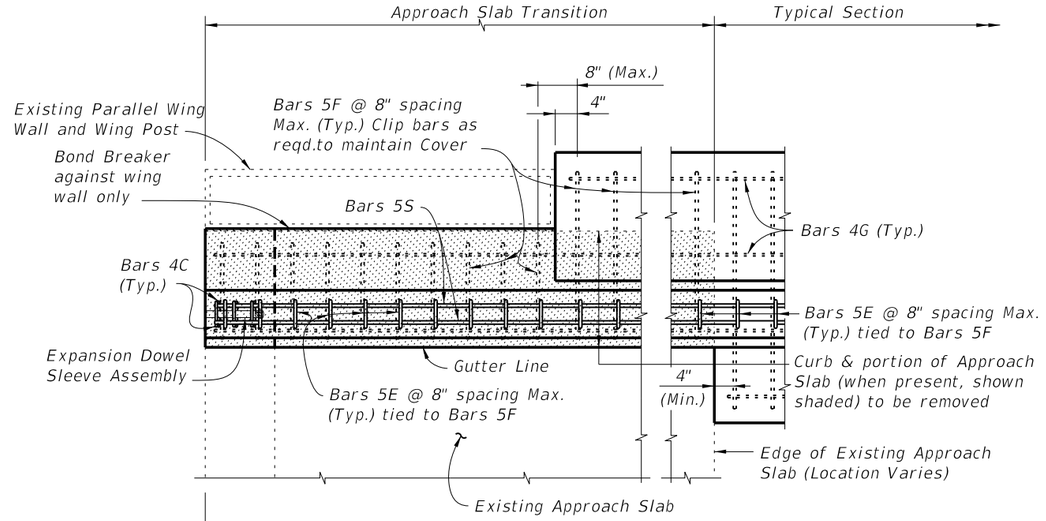

PARTIAL PLAN OF RAILING

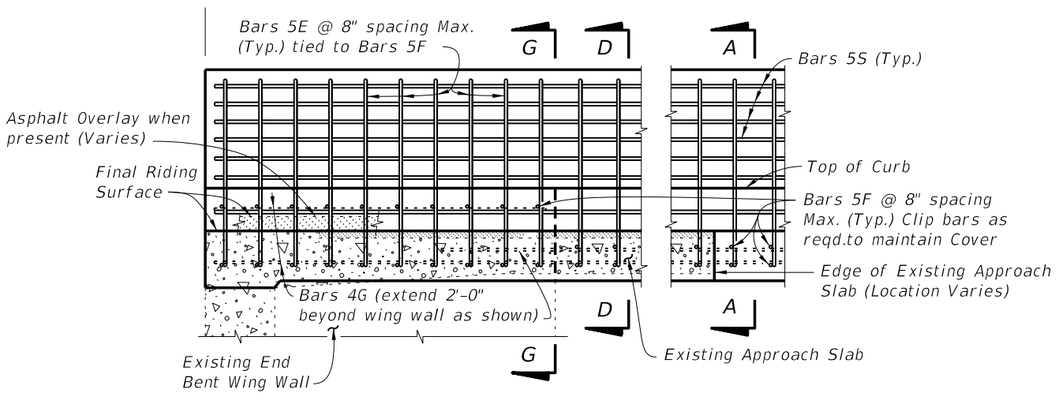

PARTIAL ELEVATION OF INSIDE FACE OF RAILING
(Existing Wing Post, Expansion Dowel Assemblies and Bars 4C not shown for clarity)

SCHEME 4 ~ MODIFICATION FOR INDEX NO. 482 SCHEME 2
RAILING END TREATMENT FOR PARALLEL CURBS AND WING WALLS WITH WIDE CURBS

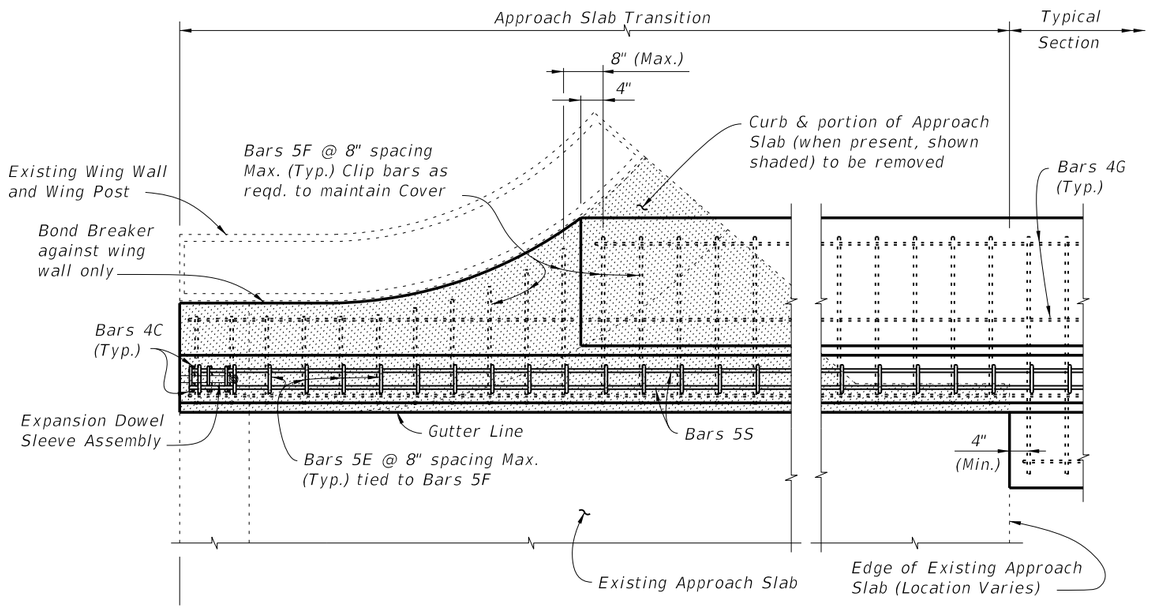

PARTIAL PLAN OF RAILING

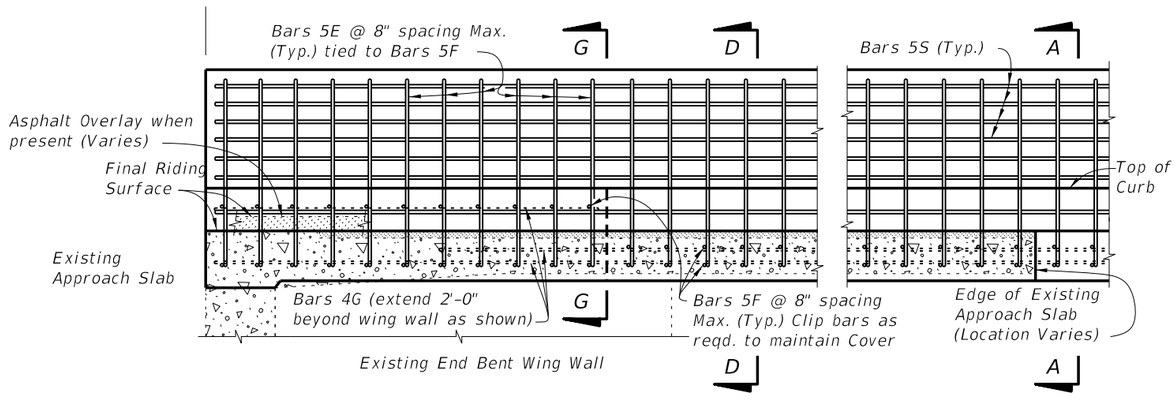

PARTIAL ELEVATION OF INSIDE FACE OF RAILING
(Existing Wing Post, Expansion Dowel Assemblies and Bars 4C not shown for clarity)

SCHEME 5 ~ MODIFICATION FOR INDEX NO. 482 SCHEME 3 AND 4
RAILING END TREATMENT FOR PARALLEL CURBS AND FLARED WING WALLS WITH WIDE CURBS

CROSS REFERENCES:
For Section A-A see Sheet 4
For Section D-D see Sheet 5.
For Section G-G see Sheet 7.
For Expansion Dowel Assemblies Details see Index 480.

LAST REVISION	REVISION	DESCRIPTION:				
07/01/09			FDOT DESIGN STANDARDS 2013	TRAFFIC RAILING - (VERTICAL FACE RETROFIT) SPREAD FOOTING APPROACH	INDEX NO. 484	SHEET NO. 8

C:\d\projects\standards\structures\2013book\00484-08of10.dgn
rd960rh
2:04:29 PM
6/28/2012

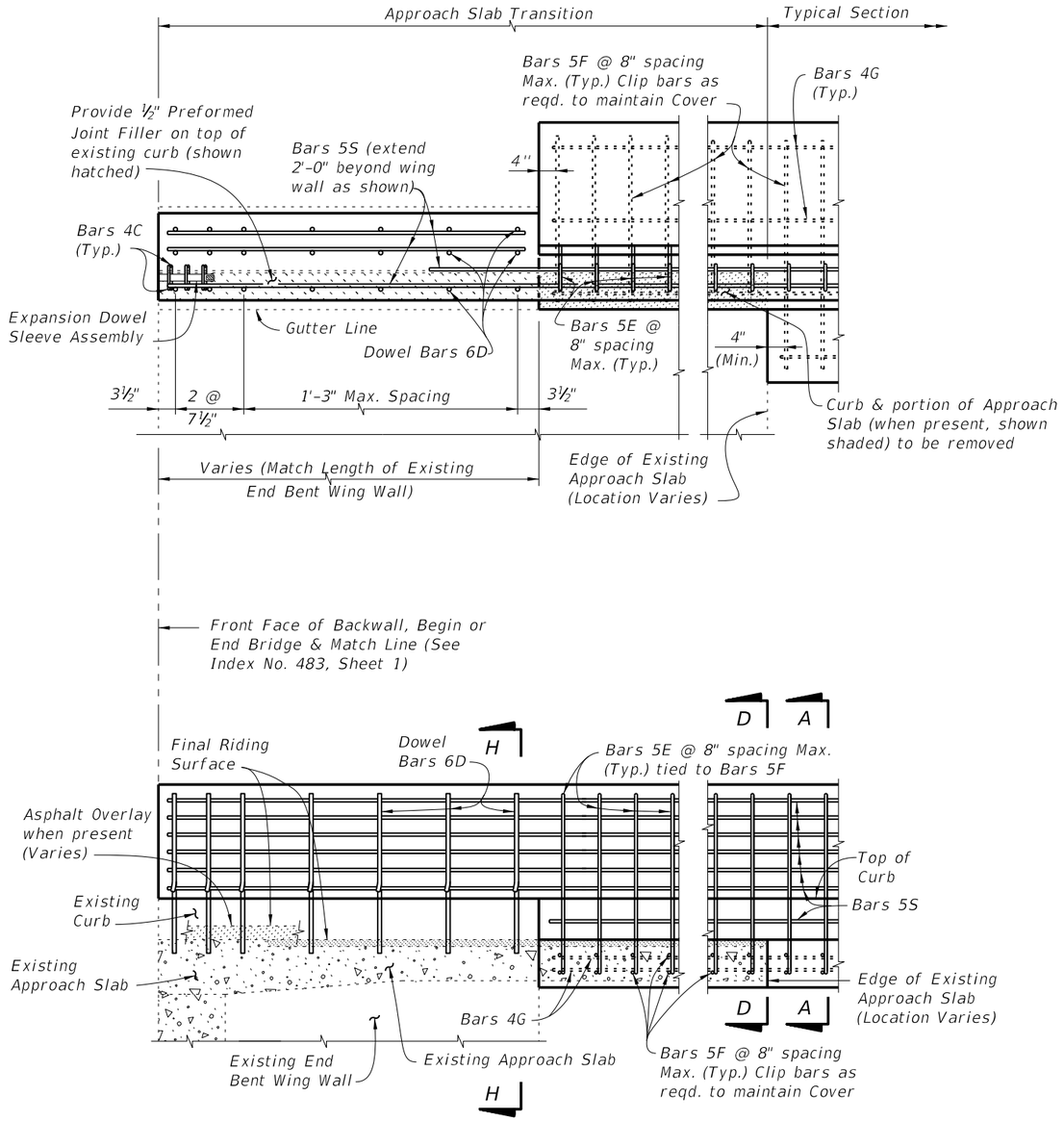

PARTIAL ELEVATION OF INSIDE FACE OF RAILING
(Expansion Dowel Assemblies and Bars 4C not shown for clarity)

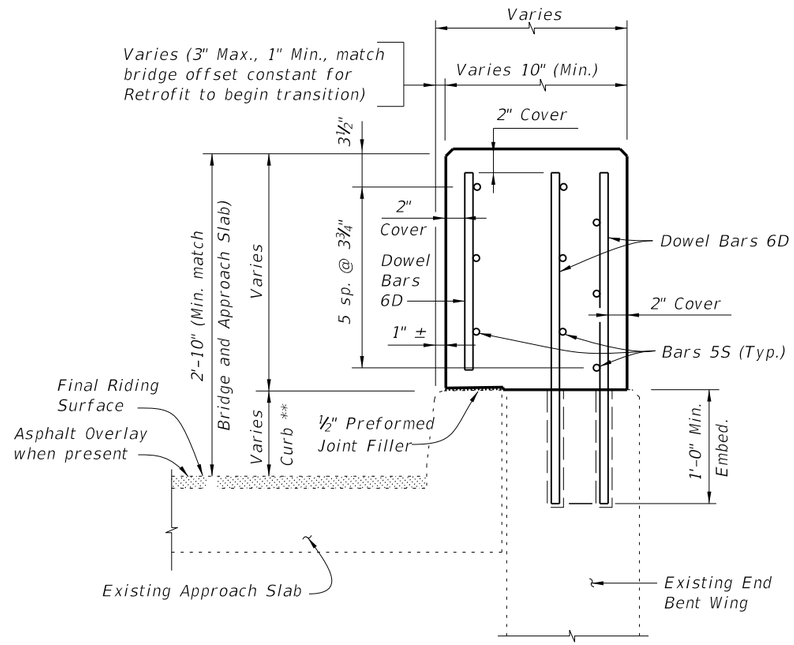

SECTION H-H

Note:
*** Match curb height at adjoining existing end bent wing.*

CROSS REFERENCES:
For Section A-A see Sheet 4.
For Section D-D see Sheet 5.
For Expansion Dowel Assembly and placement of Dowel Bars 6D Details see Index 480.

SCHEME 6 ~ MODIFICATION FOR INDEX NO. 483 SCHEME 2
RAILING END TREATMENT FOR PARALLEL CURBS AND WING WALLS WITH INTERMEDIATE CURBS

6/28/2012 2:04:32 PM rd960rh C:\d*projects*standards*structures*2013book*00484-09of10.dgn

LAST REVISION	REVISION	DESCRIPTION:				
07/01/09			FDOT DESIGN STANDARDS 2013	TRAFFIC RAILING - (VERTICAL FACE RETROFIT) SPREAD FOOTING APPROACH	INDEX NO. 484	SHEET NO. 9

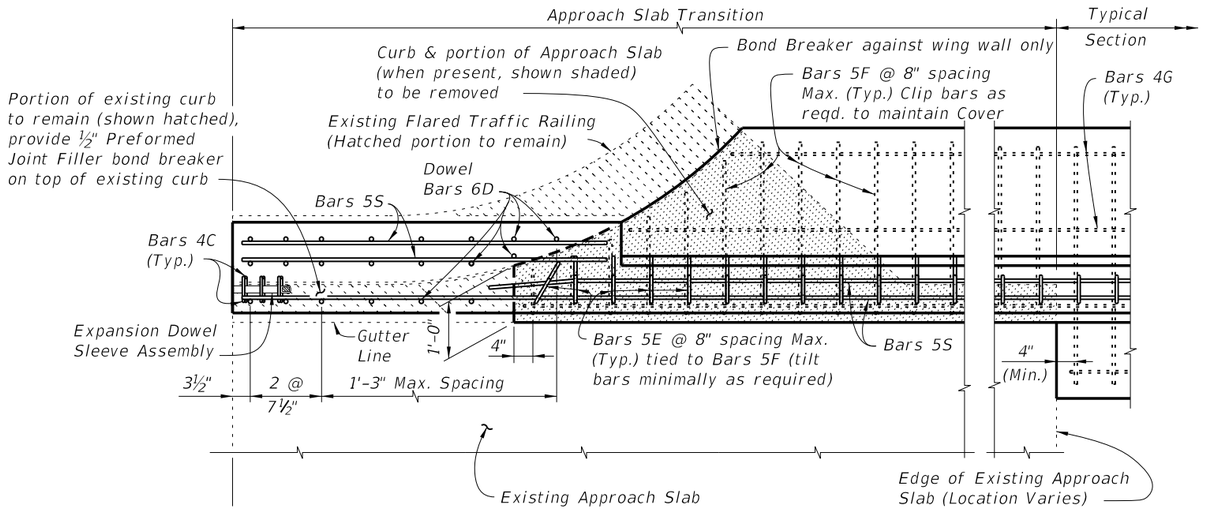

PARTIAL PLAN OF RAILING

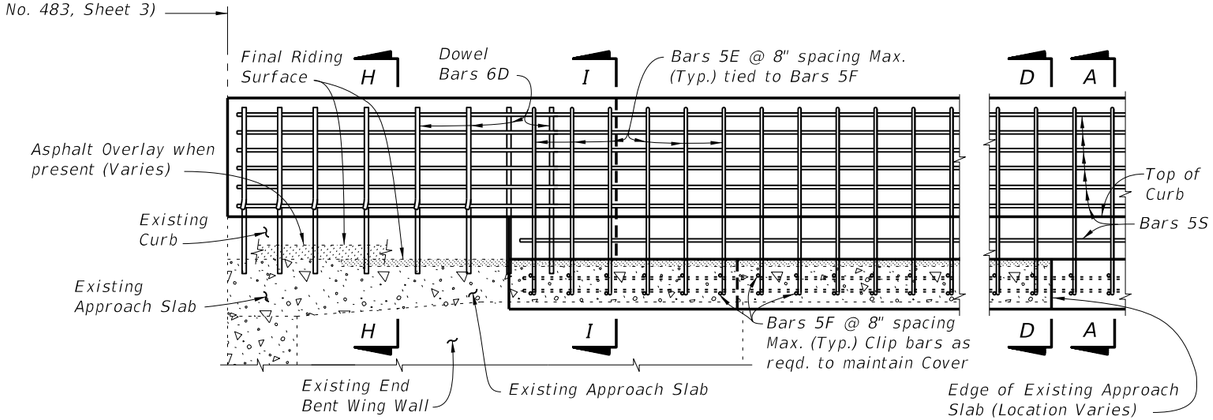

PARTIAL ELEVATION OF INSIDE FACE OF RAILING
(Expansion Dowel Assemblies and Bars 4C not shown for clarity)

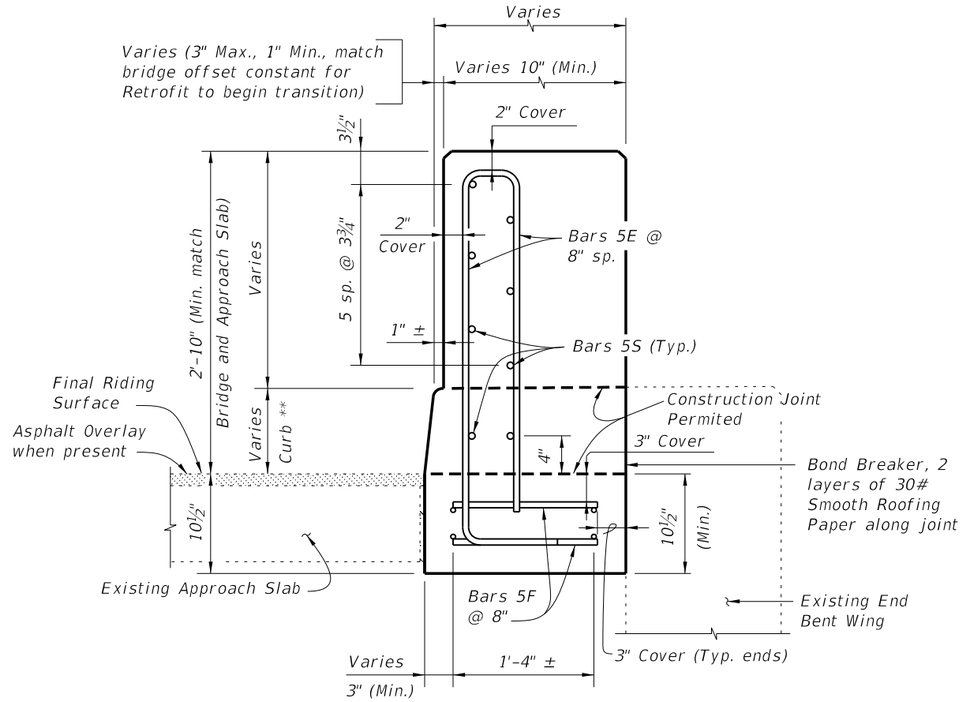

SECTION I-I

Note:
*** Match curb height at adjoining existing end bent wing.*

CROSS REFERENCES:
For Section A–A see Sheet 4.
For Section D–D see Sheet 5.
For Section H–H see Sheet 9.
For Expansion Dowel Assemblies and placement of Dowel Bars 6D Details see Index 480.

SCHEME 7 ~ MODIFICATION FOR INDEX NO. 483 SCHEME 3
RAILING END TREATMENT FOR PARALLEL CURBS AND FLARED WING WALLS WITH INTERMEDIATE CURBS

C:\d\projects\standards\structures\2013book\00484-10of10.dgn
rd960rh
2:04:34 PM
6/28/2012

LAST REVISION	REVISION	DESCRIPTION:				
07/01/09			FDOT DESIGN STANDARDS 2013	TRAFFIC RAILING - (VERTICAL FACE RETROFIT) SPREAD FOOTING APPROACH	INDEX NO. 484	SHEET NO. 10

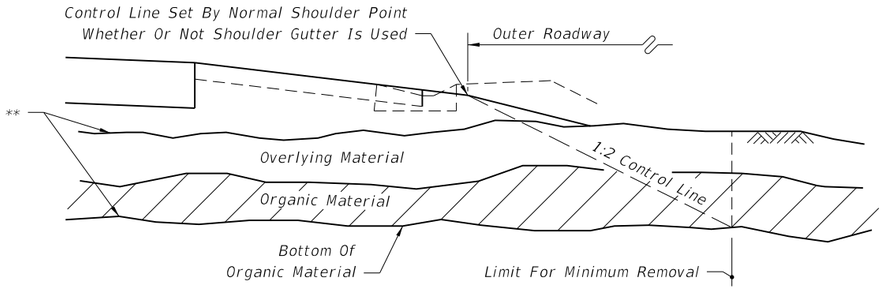

WITH OVERBURDEN - HALF SECTION

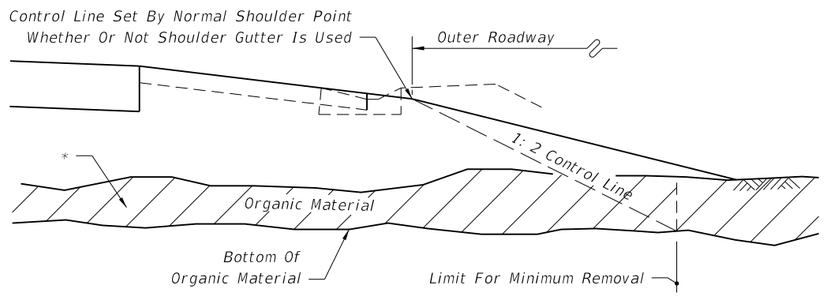

WITHOUT OVERBURDEN - HALF SECTION

IN RURAL CONSTRUCTION

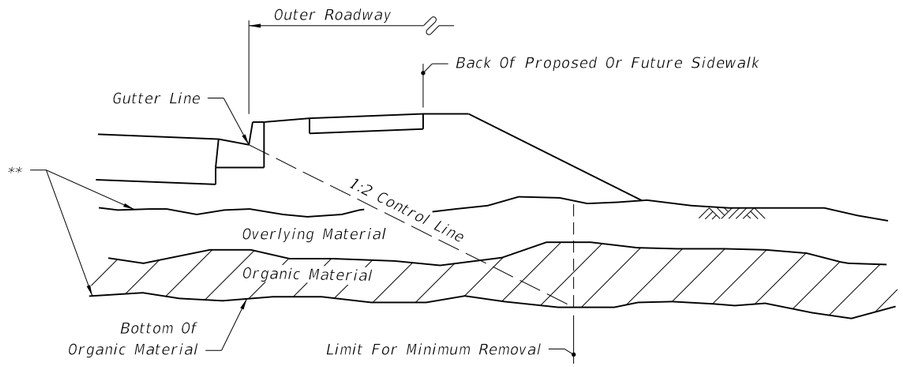

WITH OVERBURDEN - HALF SECTION

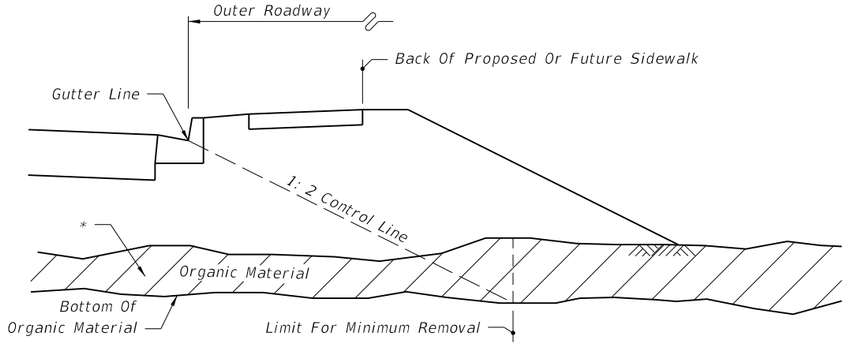

WITHOUT OVERBURDEN - HALF SECTION

** Remove Overlying Material And Organic Material Within The Limits Shown And Backfill In Accordance With Index No. 505, Unless Otherwise Called For In The Plans Or Directed Otherwise By The District Geotechnical Engineer; The Limits Include Full Median Width When Applied To Divided Facilities With Median Widths Up To 64'; When Median Width Is Greater Than 64' And For Bifurcated Roadways The Organic Material Removal Limits Will Be Set By A 1:2 Control Line Complimentary To The Outer Roadway That Will Accommodate One Future Median Lane On Each Roadway Unless Specified Otherwise By The Plans.

IN URBAN CONSTRUCTION

* Remove Organic Material Within The Limits Shown And Backfill In Accordance With Index No. 505, Unless Otherwise Called For In The Plans Or Directed Otherwise By The District Geotechnical Engineer; The Limits Include Full Median Width When Applied To Divided Facilities With Median Widths Up To 64'; When Median Width Is Greater Than 64' And For Bifurcated Roadways The Organic Material Removal Limits Will Be Set By A 1:2 Control Line Complimentary To The Outer Roadway That Will Accommodate One Future Median Lane On Each Roadway Unless Specified Otherwise By The Plans.

REMOVAL OF ORGANIC MATERIAL

GENERAL NOTES

1. All details shown on this index for removal of organic and plastic materials apply unless otherwise shown on the plans.
2. Utilization of excavated materials shall be in accordance with Index No. 505.
3. Where organic or plastic material is undercut, backfill shall be made of suitable material in accordance with Index No. 505, unless otherwise shown on the plans.
4. The term "Plastic Material" used in this index in conjunction with removal of plastic soil is as defined under soil classifications for Plastic (P) and High Plastic (H) on Index No. 505.
5. The term "Organic Material" as used on this index is defined as any soil which has an average organic content greater than five (5.0) percent, or an individual organic content test result which exceeds seven (7.0) percent. Organic material shall be removed as shown on this index and the plans unless directed otherwise by the District Geotechnical Engineer. Average organic content shall be determined from the test results from a minimum of three randomly selected samples from each stratum. Tests shall be performed in accordance with AASHTO T 267 on the portion of a sample passing the No. 4 sieve.
6. The normal depth of side ditches shall be 3.5' below the shoulder point except in special cases.
7. In municipal areas, where underdrain is to be constructed beneath the proposed pavement, the grade of the underdrain filter material will not extend above the bottom of the stabilized section of the subgrade. Gradation of the filter material shall conform to FDOT specifications. Minimum grade on underdrain pipe shall be 0.2%.
8. See Index No. 506 for miscellaneous earthwork details.

DESIGN NOTES

1. At locations where organic material or other soft soil deposits persists to such depth that removal is impractical, the construction of a geosynthetic foundation over those soils should be considered. The Engineer of Record should request guidance from the District Geotechnical Engineer and make a geosynthetic foundation design in accordance with Index No. 501 when pursuing geosynthetic alternates.
2. The designer shall take into consideration the expectancy of roadway widening to the outside, and where widening is anticipated specify in the plans the limits of removal of organic and plastic materials necessary to accommodate anticipated widening.

LAST REVISION	REVISION	DESCRIPTION:		FDOT DESIGN STANDARDS 2013	REMOVAL OF ORGANIC AND PLASTIC MATERIAL	INDEX NO.	SHEET NO.
02						500	1

C:\d\projects\standards\roadway\00500-s\00500-01.dgn
rd960rh
2:04:36 PM
6/28/2012

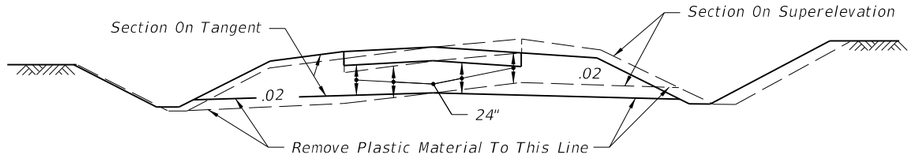

TYPICAL CUT SECTION

Note: When this detail is applied to minor collectors and local facilities, the undercut may be reduced to 18".

REMOVAL OF PLASTIC MATERIAL ON DIVIDED FREEWAYS, ARTERIALS AND MAJOR COLLECTORS HAVING FLUSH MEDIANS, AND ON UNDIVIDED ARTERIALS AND MAJOR COLLECTORS

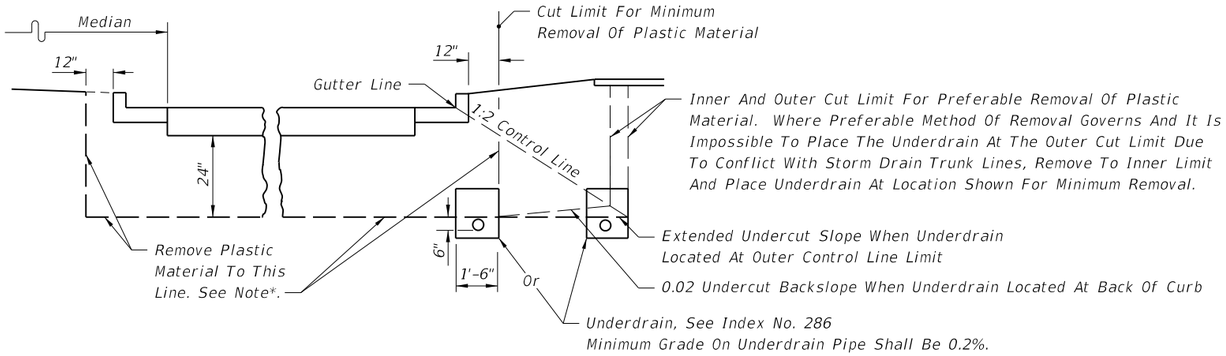

HALF SECTION

NOTES:

Refer to roadway cross sections to determine whether minimum or preferable removal is used.

* Where frequency of median breaks indicates that it is impractical to leave plastic material in the median, the designer may elect to indicate total removal of this material. If during construction it becomes apparent, due to normal required construction procedures, that it is impractical to leave the plastic material in the median, total removal of this material shall be approved by the Engineer.

REMOVAL OF PLASTIC MATERIAL AND LOCATION OF UNDERDRAIN IN URBAN CONSTRUCTION

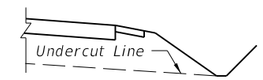

At locations where plastic material is being removed, the side ditches must be at least as deep as the undercut plane.

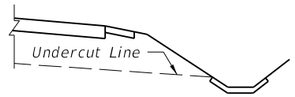

Where paved side ditches are used in areas of removal of plastic material, the top of the ditch pavement must be no higher than the undercut plane.

MISCELLANEOUS DETAILS

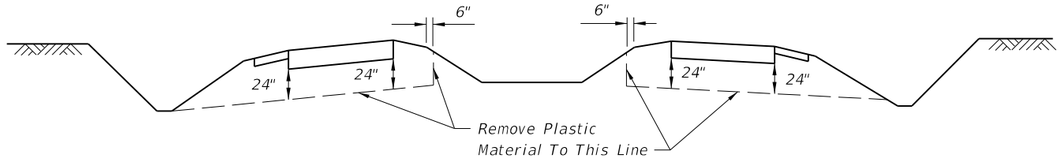

TYPICAL CUT SECTION ON TANGENT

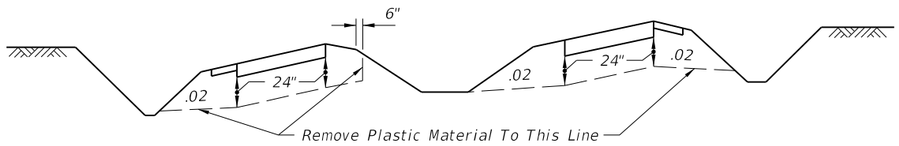

TYPICAL CUT SECTION ON SUPERELEVATION

REMOVAL OF PLASTIC MATERIAL ON INTERSTATE FACILITIES, FREEWAYS, DIVIDED ARTERIALS AND MAJOR COLLECTORS HAVING DEPRESSED MEDIANS

REMOVAL OF PLASTIC MATERIAL

Note: For GENERAL NOTES see Sheet 1.

6/28/2012 2:04:38 PM rd960rh C:\d\projects\standards\roadway\00500-s\00500-02.dgn

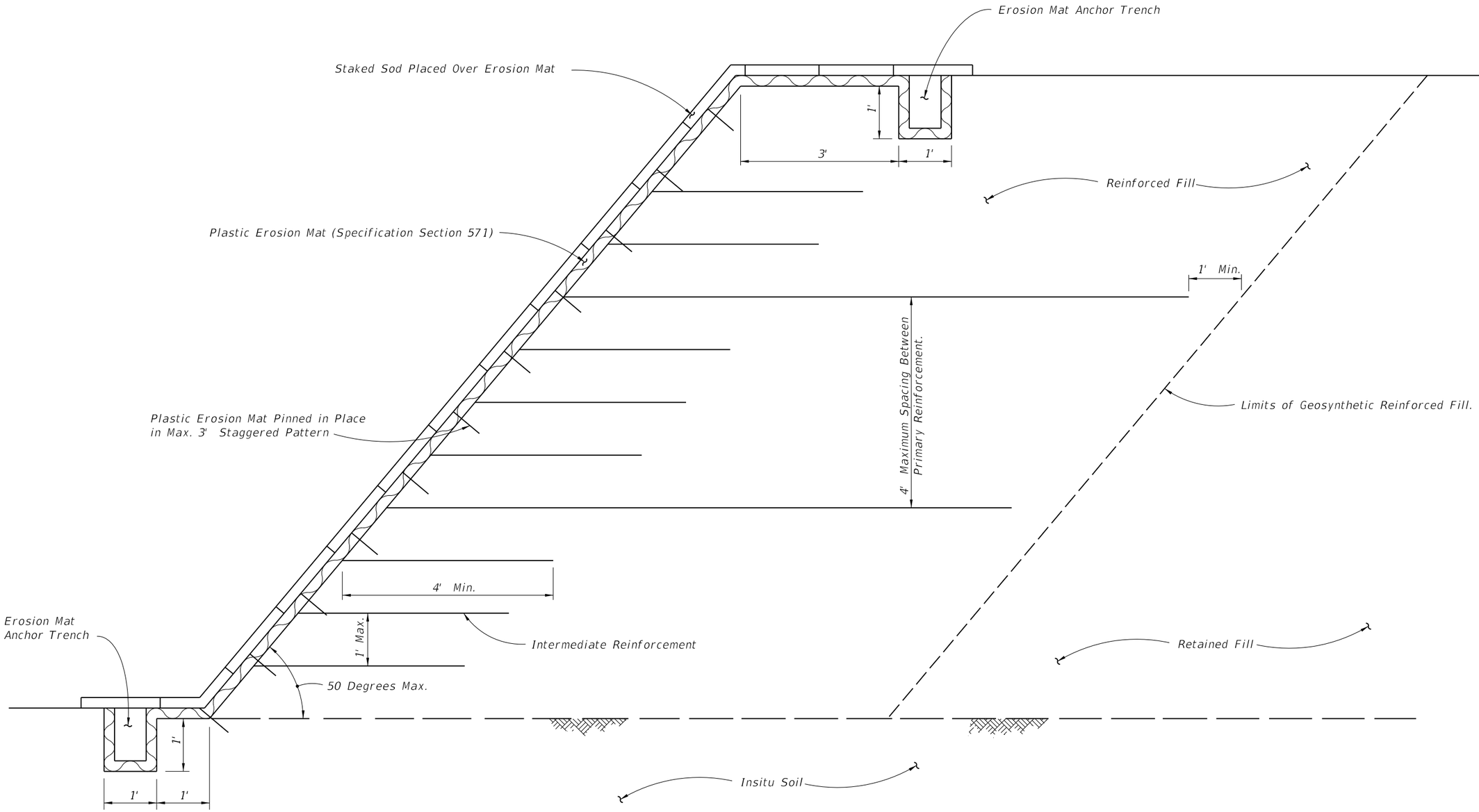

GEOSYNTHETIC REINFORCED SOIL SLOPES

GENERAL NOTES

1. All Designs shall meet the requirements shown on this sheet and the contract documents.
2. $T_a = \dfrac{T_{ult}}{RF_c\, RF_d\, RF_j\, RF_{LT} CRF}$
3. Intermediate reinforcement shall be rolled out parallel to slope face.

LAST REVISION	REVISION	DESCRIPTION:				
01/01/11			FDOT DESIGN STANDARDS 2013	GEOSYNTHETIC REINFORCED SOILS	INDEX NO. 501	SHEET NO. 1

C:\d\projects\standards\structures\2013book\00501-01of12.dgn rd960rh 2:04:41 PM 6/28/2012

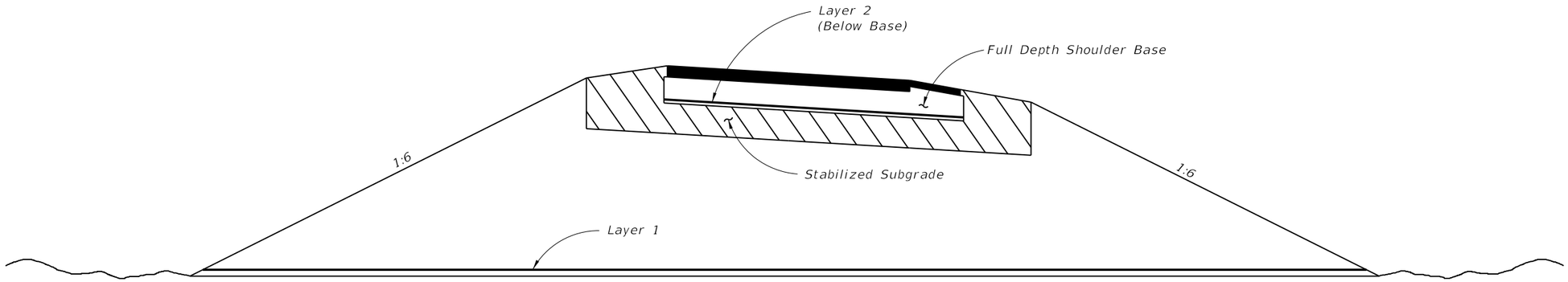

REINFORCED EMBANKMENT

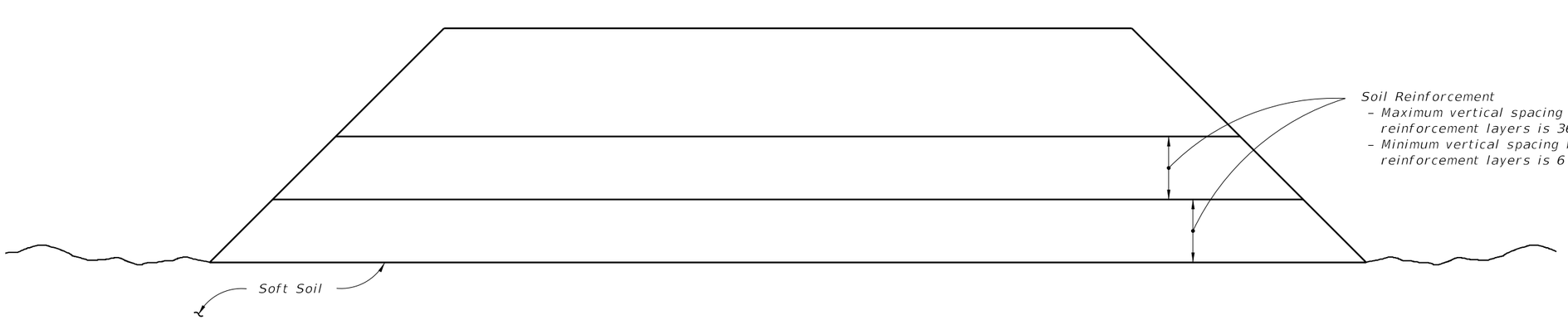

GEOSYNTHETIC REINFORCED FOUNDATIONS CONSTRUCTED ON SOFT SOILS

C:\d\projects\standards\structures\2013book\00501-02of12.dgn
rd960rh
2:04:43 PM
6/28/2012

LAST REVISION	REVISION	DESCRIPTION:		FDOT DESIGN STANDARDS 2013	GEOSYNTHETIC REINFORCED SOILS	INDEX NO.	SHEET NO.
01/01/11						501	2

TABLE OF WOVEN GEOTEXTILE VALUES

PROPERTY		REQUIRED TEST METHOD	MIRAFI GEOLON HP 370	MIRAFI GEOLON HP 570	MIRAFI GEOLON HP 665	MIRAFI GEOLON HP 770	MIRAFI GEOLON HS 400	MIRAFI GEOLON HS 600	MIRAFI GEOLON HS 800	MIRAFI GEOLON HS 1150	MIRAFI MIRAMESH GR
Permittivity (0.05 sec^{-1} Min.)		ASTM D 4491	0.52	0.40	0.26	0.23	0.1	0.32	0.20	0.32	———
UV Stability (Min. Retained Strength @ 500 hr.)		ASTM D 4355	70%	70%	70%	70%	50%	50%	50%	50%	90%
Burst Strength (psi)		ASTM D 6241	800	1,200	1,200	1,200	———	———	———	———	———
Grab Strength (Lb.)		ASTM D 4632	400 x 250	475 x 440	600 X 700	550 x 450	———	———	———	———	———
A.O.S. (in.)		ASTM D 4751	0.0236	0.0236	0.0167	0.0236	0.0167	0.0335	0.0335	0.0236	0.120 x 0.120
Tensile Strength (Lb./Ft.)		ASTM D 4595									
Machine Direction	Ultimate (T_{ult})		3,240	4,800	4,800	7,200	4,800	7,200	9,600	13,800	1,440
	2% Strain		540	960	———	780	———	———	———	———	———
	5% Strain		1,356	2,400	1,200	3,600	1,080	2,400	3,600	4,800	———
Cross Direction	Ultimate		2,700	4,800	6,600	4,800	4,800	3,600	3,600	3,600	1,733
	2% Strain		540	1,320	———	1,320	———	———	———	———	———
	5% Strain		1,560	2,604	4,200	3,600	2,400	———	———	———	———
Strain @ Ultimate Tensile Strength		ASTM D 4595	14%	10%	12%	12%	15%	15%	10%	12%	6%
Secant Modulus @ (lb./Ft.)	2% Strain		27,000	48,000	———	39,000	———	———	———	———	———
	5% Strain		27,120	48,000	24,000	72,000	21,600	48,000	72,000	96,000	———
	10% Strain		24,000	48,000	30,000	66,000	33,600	57,600	96,000	120,000	———
Seam Breaking Strength (Lb./Ft.)		ASTM D 4884	1,688	3,000	3,600	3,000	2,400	2,400	2,400	2,400	———
Puncture Resistance (Lb.)		ASTM D 4833	180	195	280	160	———	———	———	———	———
Tear Strength (lb.)	Machine Direction	ASTM D 4833	170	180	180	250	———	———	———	———	———
	Cross Direction	ASTM D 4833	110	180	275	300	———	———	———	———	———
Soil-Geosynthetic Friction		ASTM D 6706	0.8	0.8	0.8	0.8	0.8	0.8	0.8	0.8	0.8
Creep Resistance-T_{creep}(Lb./Ft.)		ASTM D 5262	———	———	———	———	2,880	4,320	5,760	8,280	471 x 566
Creep Reduction Factor (T_{ult}/T_{creep})			3.5	3.5	3.5	3.5	1.67	1.67	1.67	1.67	3.0
Installation Damage (RF_C)	Sand	GRI : GG4 & GT7	1.10	1.10	1.10	1.10	1.15	1.15	1.10	1.10	1.05
	Limestone		1.25	1.25	1.25	1.25	1.25	1.25	1.20	1.20	1.10
Durability (RF_d)	Chemical	ASTM D 5322	1.1	1.1	1.1	1.1	1.1	1.1	1.1	1.1	1.10
	Biological	ASTM D1987 & G21	1.0	1.0	1.0	1.0	1.0	1.0	1.0	1.0	1.0
Joint Strength (RF_j)	Mechanical	ASTM D 4595, GRI : GG4 & GT7	———	———	———	———	———	———	———	———	———
	Overlap *	ASTM D 6706	1.0	1.0	1.0	1.0	1.0	1.0	1.0	1.0	1.0
Approved Application Usage			3, 4	3, 4	3, 4	3, 4	3, 4	3, 4	3, 4	3, 4	1,4

Approved Application Usage:
1 = Steepened Slopes
2 = Reinforcement of Foundations over Soft Soils
3 = Both Steepened Slopes & Reinforcement of Foundations over Soft Soils
4 = Reinforced Embankment
5 = Construction Expedient

* Minimum 3' Overlap

APPROVED GEOSYNTHETIC PRODUCTS
(WOVEN GEOTEXTILE)
APPLICATION AND PROPERTIES

C:\d*\projects\standards\structures\2013book\00501-03of12.dgn rd960rh 2:04:44 PM 6/28/2012

TABLE OF WOVEN GEOTEXTILE VALUES

PROPERTY		REQUIRED TEST METHOD	MIRAFI BXG11	MIRAFI BXG12	MIRAFI GEOLON HS 2400	MIRAFI GEOLON HS 3000	COMTRAC 70.70	GEOTEX 315ST	GEOTEX 2x2HF	GEOTEX 3x3HF	GEOTEX 4x4	GEOTEX 4x4HF	GEOTEX 4X6
Permittivity (0.05 sec^{-1} Min.)		ASTM D 4491	———	———	0.02	0.02	0.20	0.04	0.65	0.18	0.15	0.40	0.26
UV Stability (Min. Retained Strength @ 500 hr.)		ASTM D 4355	70%	70%	70%	70%	70%	70%	70%	70%	70%	70%	70%
Burst Strength (psi)		ASTM D 6241	———	———	———	———	———	1,000	1,100	1,000	1,500	1,200	1,500
Grab Strength (Lb.)		ASTM D 4632	———	———	———	———	———	315	315	450/350	600/500	475/440	600/700
A.O.S. (in.)		ASTM D 4751	1.0 x 1.0	1.0 x 1.0	0.0118	0.0118	0.0181	0.0167	0.0167	0.0236	0.0236	0.533	0.312
Tensile Strength (Lb./Ft.)		ASTM D 4595											
Machine Direction	Ultimate (T_{ult})		2,000	2,000	28,800	36,000	4,800	2,100	2,400	3,600	4,800	4,800	4,800
	2% Strain		500	500	———	———	———	156	276	400	456	960	700
	5% Strain		920	920	14,400	18,000	2,196	564	744	1,392	1,452	2,400	1,200
Cross Direction	Ultimate		2,000	4,000	3,600	3,600	3,600	2,100	2,400	3,600	4,800	4,800	6,600
	2% Strain		500	750	———	———	———	576	660	400	1,380	1,320	1,000
	5% Strain		920	1,350	———	———	———	1,104	1,404	1,740	2,604	2,400	2,640
Strain @ Ultimate Tensile Strength			12%	12%	10%	10%	9%	15%	10%	10%	10%	8%	8%
Secant Modulus @ (lb./ft.)	2% Strain	ASTM D 4595	25,000	25,000	———	———	———	7,800	13,800	27,000	22,800	48,000	48,000
	5% Strain		18,400	18,400	288,000	360,000	24,400	11,280	14,880	27,000	29,040	48,000	48,000
	10% Strain		———	———	288,000	360,000	24,400	10,440	12,480	24,000	31,200	48,000	48,000
Seam Breaking Strength (Lb./Ft.)		ASTM D 4884			3,600	3,600	2,400	———	———	———	———	———	———
Puncture Resistance (Lb.)		ASTM D 4833	———	———	———	———	———	120	120	180	170	190	280
Tear Strength (lb.)	Machine Direction	ASTM D 4833	———	———	———	———	———	120	120	180	250	180	180
	Cross Direction	ASTM D 4833	———	———	———	———	———	120	120	110	250	180	250
Soil-Geosynthetic Friction		ASTM D 6706	0.8	0.8	0.8	0.8	0.9	0.65	0.65	0.65	0.65	0.65	0.65
Creep Resistance-T_{creep}(Lb./Ft.)		ASTM D 5262	———	———	17,280	21,600	———	600	———	———	———	———	———
Creep Reduction Factor (T_{ult}/T_{creep})			1.6	1.6	1.67	1.67	1.67	3.5	5.0	5.0	5.0	5.0	5.0
Installation Damage (RF_c)	Sand	GRI : GG4 & GT7	1.05	1.05	1.1	1.1	1.2	1.4	1.4	1.4	1.4	1.4	1.4
	Limestone		1.10	1.10	1.20	1.20	1.5	1.4	1.4	1.5	1.4	1.4	1.4
Durability (RF_d)	Chemical	ASTM D 5322	1.1	1.1	1.1	1.1	1.1	1.1	1.1	1.1	1.1	1.1	1.1
	Biological	ASTM D1987 & G21	1.0	1.0	1.0	1.0	1.0	1.1	1.1	1.1	1.1	1.1	1.1
Joint Strength (RF_j)	Mechanical	ASTM D 4595, GRI : GG4 & GT7	———	———	———	———	———	———	———	———	———	———	———
	Overlap *	ASTM D 6706	1.0	1.0	1.0	1.0	1.0	1.2	1.2	1.0	1.2	1.0	1.2
Approved Application Usage			3, 4	3, 4	3, 4	3, 4	3	2	2	2	2	2	2

Approved Application Usage:
1 = Steepened Slopes
2 = Reinforcement of Foundations over Soft Soils
3 = Both Steepened Slopes & Reinforcement of Foundations over Soft Soils
4 = Reinforced Embankment
5 = Construction Expedient

* Minimum 3' Overlap

APPROVED GEOSYNTHETIC PRODUCTS (WOVEN GEOTEXTILE) APPLICATION AND PROPERTIES

C:\d\projects\standards\structures\2013book\00501-04of12.dgn rd960rh 2:04:47 PM 6/28/2012

TABLE OF WOVEN GEOTEXTILE VALUES

PROPERTY		REQUIRED TEST METHOD	TENCATE HP270	TENCATE HP370	TENCATE HP570	TENCATE HP665	TENCATE HP770	TENCATE MMESH/GR	TENCATE MMESH/SG	TENCATE HS400	TENCATE HS600	TENCATE HS800	TENCATE HS1150
Permittivity (0.05 sec^{-1} Min.)		ASTM D 4491	0.5	0.52	0.4	0.26	0.23	--	--	0.1	0.32	0.2	0.32
UV Stability (Min. Retained Strength @ 500 hr.)		ASTM D 4355	80%	80%	80%	70%	80%	90%	90%	50%	50%	50%	50%
Burst Strength (psi)		ASTM D 6241	--	--	--	--	--	--	--	--	--	--	--
Grab Strength (Lb.)		ASTM D 4632	290/255	400/250	475/440	600/700	550/450	--	--	--	--	--	--
A.O.S. (in.)		ASTM D 4751	0.0236	0.0236	0.0236	0.0167	0.0236	--	--	0.0169	0.0335	0.0335	0.0236
Tensile Strength (Lb./Ft.)		ASTM D 4595											
Machine Direction	Ultimate (T_{ult})		2640	3600	4800	4800	7200	1440	1440	4800	7200	9600	13800
	2% Strain		480	540	960	300	1140	--	--	--	--	--	--
	5% Strain		1212	1500	2400	1200	3600	--	--	1080	2400	3600	6000
Cross Direction	Ultimate		2460	2700	4800	6600	5760	1733	1733	4800	3600	3600	3600
	2% Strain		588	540	1320	1740	1560	--	--	--	--	--	--
	5% Strain		1356	1560	2700	4200	3600	--	--	2400	1800	1200	--
Strain @ Ultimate Tensile Strength			10%	10%	10%	10%	10%	6%	6%	10%	10%	10%	10%
Secant Modulus @ (lb./ft.)	2% Strain	ASTM D 4595	24000	27000	48000	48000	57000	--	--	--	--	--	--
	5% Strain		24240	30000	48000	48000	72000	--	--	21600	48000	72000	120000
	10% Strain		23400	--	--	50400	66000	--	--	33600	--	90000	--
Seam Breaking Strength (Lb./Ft.)		ASTM D 4884	1260	1260	3000	3600	3000	--	--	2400	2400	2400	2400
Puncture Resistance (Lb.)		ASTM D 4833	--	180	--	1650	--	--	--	--	--	--	--
Tear Strength (lb.)	Machine Direction	ASTM D 4833	120	170	180	180	250	--	--	--	--	--	--
	Cross Direction	ASTM D 4833	140	125	180	275	300	--	--	--	--	--	--
Soil-Geosynthetic Friction		ASTM D 6706	0.8	0.8	900	0.8	0.8	0.8	0.8	0.8	0.8	0.8	0.8
Creep Resistance-T_{creep}(Lb./Ft.)		ASTM D 5262	660	900	900	1650	1800	471	471	2880	4320	5760	8280
Creep Reduction Factor (T_{ult}/T_{creep})			4	4	4	4	4	3.7	3.7	1.67	1.67	1.67	1.67
Installation Damage (RF_c)	Sand	GRI : GG4 & GT7	1.1	1.1	1.1	1.1	1.1	1.05	1.05	1.15	1.15	1.15	1.15
	Limestone		1.5	1.5	1.5	1.5	1.5	1.1	1.1	1.25	1.25	1.25	1.25
Durability (RF_d)	Chemical	ASTM D 5322	1.1	1.1	1.1	1.1	1.1	--	1.1	1.1	1.1	1.1	1.1
	Biological	ASTM D1987 & G21	1.0	1.0	1.0	1.0	1.0	--	1.0	1.0	1.0	1.0	1.0
Joint Strength (RF_j)	Mechanical	ASTM D 4595, GRI : GG4 & GT7	--	--	--	--	--	--	--	--	--	--	--
	Overlap *	ASTM D 6706	1.0	1.0	1.0	1.0	1.0	--	--	--	--	--	--
Approved Application Usage			3, 4, 5	3, 4, 5	3, 4, 5	3, 4, 5	3, 4, 5	1, 4, 5	1, 4, 5	3, 4, 5	3, 4, 5	3, 4, 5	3, 4, 5

Approved Application Usage:
1 = Steepened Slopes
2 = Reinforcement of Foundations over Soft Soils
3 = Both Steepened Slopes & Reinforcement of Foundations over Soft Soils
4 = Reinforced Embankment
5 = Construction Expedient

* Minimum 3' Overlap

APPROVED GEOSYNTHETIC PRODUCTS
(WOVEN GEOTEXTILE)
APPLICATION AND PROPERTIES

C:\d\projects\standards\structures\2013book\00501-05of12.dgn rd960rh 2:04:49 PM 6/28/2012

TABLE OF WOVEN GEOGRID VALUES

PROPERTY		REQUIRED TEST METHOD	MIRAFI MG 2XT	MIRAFI MG 3XT	MIRAFI MG 5XT (Matrex 30)	MIRAFI MG 7XT	MIRAFI MG 8XT	MIRAFI MG 10XT (Matrex 60)	MIRAFI MG 18XT (Matrex 90)	MIRAFI MG 20XT (Matrex 120)	MIRAFI MG 22XT (Matrex 180)	MIRAFI MG 24XT (Matrex 240)
UV Stability (Min. Retained Strength @ 500 hr.)		ASTM D 4355	70%	70%	70%	70%	70%	70%	70%	70%	70%	70%
Tensile Strength (Lb./Ft.)		ASTM D 6637										
Machine Direction	Ultimate (T_{ult})		2,000	3,150	4,300	5,700	7,000	9,500	9,360	12,420	17,760	25,380
	2% Strain		———	———	———	———	———	———	———	———	———	———
	5% Strain		1,000	1,056	1,740	2,160	2,520	3,120	3,250	5,340	6,700	7,000
Cross Direction	Ultimate		2,000	———	———	———	———	———	———	———	———	———
	2% Strain		———	———	———	———	———	———	———	———	———	———
	5% Strain		———	———	———	———	———	———	———	———	———	———
Strain @ Ultimate Tensile Strength		ASTM D 6637	10%	10%	10%	10%	10%	10%	10%	10%	10%	10%
Secant Modulus @ (Lb./Ft.)	2% Strain		———	———	———	———	———	———	———	———	———	———
	5% Strain		20,000	21,120	34,800	43,200	50,400	62,400	65,000	106,800	134,000	140,000
	10% Strain		———	———	———	———	———	———	———	———	———	———
Junction Strength (Lb./Ft.)		GRI : GG2	———	———	———	———	———	———	———	———	———	———
Soil-Geosynthetic Friction		ASTM D 6706	0.8	0.8	0.8	0.8	0.8	0.8	0.8	0.8	0.8	0.8
Creep Resistance-T_{creep} (Lb./Ft.)		ASTM D 5262	1,250	1,969	2,688	3,563	4,375	5,938	5,850	7,221	10,326	14,756
Creep Reduction Factor (T_{ult}/T_{creep})			1.6	1.6	1.6	1.6	1.6	1.6	1.6	1.72	1.72	1.72
Installation Damage (RF_c)	Sand	GRI : GG4 & GT7	1.05	1.05	1.05	1.05	1.05	1.05	1.05	1.05	1.05	1.05
	Limestone		1.5	1.25	1.25	1.25	1.25	1.25	1.25	1.25	1.25	1.25
Durability (RF_d)	Chemical	ASTM D 5322	1.1	1.1	1.1	1.1	1.1	1.1	1.1	1.1	1.1	1.1
	Biological	ASTM D1987 & G21	1.0	1.0	1.0	1.0	1.0	1.0	1.0	1.0	1.0	1.0
Joint Strength (RF_j)	Mechanical	ASTM D 6637, GRI : GG4 & GT7	———	———	———	———	———	———	———	———	———	———
	Overlap *	ASTM D 6706	1.2	1.2	1.2	1.2	1.2	1.2	1.2	1.2	1.2	1.2
Approved Application Usage			3	3	3	3	3	3	3	3	3	3

Approved Application Usage:
1 = Steepened Slopes
2 = Reinforcement of Foundations over Soft Soils
3 = Both Steepened Slopes & Reinforcement of Foundations over Soft Soils
4 = Reinforced Embankment
5 = Construction Expedient
** Minimum 3' Overlap*

APPROVED GEOSYNTHETIC PRODUCTS (WOVEN GEOGRID) APPLICATION AND PROPERTIES

C:\d\projects\standards\structures\2013book\00501-06of12.dgn
rd960rh
2:04:51 PM
6/28/2012

TABLE OF WOVEN GEOGRID VALUES

PROPERTY		REQUIRED TEST METHOD	RAUGRID 3/3	RAUGRID 4/2	RAUGRID 6/3	RAUGRID 8/3	RAUGRID 10/3	FORNIT 20	FORNIT 30
UV Stability (Min. Retained Strength @ 500 hr.)		ASTM D 4355	95%	95%	95%	95%	95%	92%	92%
Tensile Strength (Lb./Ft.)		ASTM D 6637							
Machine Direction	Ultimate (T_{ult})		2,233	2,843	4,350	5,288	6,590	1,159	1,890
	2% Strain		———	———	———	———	———	360	600
	5% Strain		712	767	1,144	1,165	1,582	774	1,390
Cross Direction	Ultimate		2,213	1,459	1,959	2,089	2,192	1,641	2,466
	2% Strain		———	———	———	———	———	543	778
	5% Strain		541	356	452	507	521	1,111	1,719
Strain @ Ultimate Tensile Strength		ASTM D 6637	10.8%	11.8%	13.1%	12.2%	11.5%	6%	6%
Secant Modulus @ (lb./ft.)	2% Strain		———	———	———	———	———	18,000	30,000
	5% Strain		———	———	———	———	———	15,480	27,800
	10% Strain		———	———	———	———	———	———	———
Junction Strength (Lb./Ft.)		GRI : GG2	N/A	100%	100%	100%	100%	30	32.2
Soil-Geosynthetic Friction		ASTM D 6706	0.8	0.8	0.8	0.8	0.8	0.9	0.9
Creep Resistance-T_{creep} (Lb./Ft.)		ASTM D 5262	1,466	1,870	2,862	3,479	4,335	355	588
Creep Reduction Factor (T_{ult} /T_{creep})			1.52	1.52	1.52	1.52	1.52	3.5	3.5
Installation Damage (RF_C)	Sand	GRI : GG4 & GT7	1.10	1.10	1.10	1.10	1.10	1.10	1.10
	Limestone		1.17	1.17	1.17	1.17	1.17	1.10	1.10
Durability (RF_d)	Chemical	ASTM D 5322	1.15	1.15	1.15	1.15	1.15	1.10	1.10
	Biological	ASTM D1987 & G21	1.15	1.15	1.15	1.15	1.15	1.0	1.0
Joint Strength (RF_j)	Mechanical	ASTM D 6637, GRI : GG4 & GT7	———	———	———	———	———	———	———
	Overlap *	ASTM D 6706	———	———	———	———	———	1.0	1.1
Approved Application Usage			2, 5	2, 5	2, 5	2, 5	2, 5	2, 4, 5	2, 4, 5

Approved Application Usage:
1 = Steepened Slopes
2 = Reinforcement of Foundations over Soft Soils
3 = Both Steepened Slopes & Reinforcement of Foundations over Soft Soils
4 = Reinforced Embankment
5 = Construction Expedient
* Minimum 3' Overlap

APPROVED GEOSYNTHETIC PRODUCTS
(WOVEN GEOGRID)
APPLICATION AND PROPERTIES

6/28/2012 2:04:53 PM rd960rh C:\d\projects\standards\structures\2013book\00501-07of12.dgn

TABLE OF WOVEN GEOGRID VALUES

PROPERTY		REQUIRED TEST METHOD	STRATAGRID MICROGRID	STRATAGRID SG 150	STRATAGRID SG 200	STRATAGRID SG 350	STRATAGRID SG 500	STRATAGRID SG 550	STRATAGRID SG 600	STRATAGRID SG 700
UV Stability (Min. Retained Strength @ 500 hr.)		ASTM D 4355	70%	70%	70%	70%	70%	70%	70%	70%
Tensile Strength (Lb./Ft.)		ASTM D 6637	———	———	———	———	———	———	———	———
Machine Direction	Ultimate (T_{ult})		2,000	1,875	3,400	4,800	6,300	7,800	8,700	11,750
	2% Strain		———	———	———	———	———	———	———	———
	5% Strain		600	450	700	750	1,150	1,200	1,400	1,700
Cross Direction	Ultimate		2,000	1,875	———	———	———	———	———	———
	2% Strain		———	———	———	———	———	———	———	———
	5% Strain		450	———	———	———	———	———	———	———
Strain @ Ultimate Tensile Strength		ASTM D 6637	15.0%	15.0%	15.0%	15.0%	15.0%	15.0%	18.0%	18.0%
Secant Modulus @ (lb./ft.)	2% Strain		———	———	———	———	———	———	———	———
	5% Strain		12,000	9,000	14,000	15,000	23,000	24,000	24,000	34,000
	10% Strain		———	———	———	———	———	———	———	———
Junction Strength (Lb./Ft.)		GRI : GG2	———	———	———	———	———	———	———	———
Soil-Geosynthetic Friction		ASTM D 6706	0.8	0.8	0.8	0.8	0.8	0.8	0.8	0.8
Creep Resistance-T_{creep} (Lb./Ft.)		ASTM D 5262	1,149	1,210	2,194	3,097	4,065	5,032	5,613	7,581
Creep Reduction Factor (T_{ult}/T_{creep})			1.74	1.55	1.55	1.55	1.55	1.55	1.55	1.55
Installation Damage (RF_C)	Sand	GRI : GG4 & GT7	1.20	1.10	1.10	1.05	1.05	1.05	1.05	1.05
	Limestone		1.90	1.20	1.20	1.20	1.15	1.15	1.15	1.15
Durability (RF_d)	Chemical	ASTM D 5322	1.10	1.10	1.10	1.10	1.10	1.10	1.10	1.10
	Biological	ASTM D1987 & G21	1.10	1.10	1.10	1.10	1.10	1.10	1.10	1.10
Joint Strength (RF_j)	Mechanical	ASTM D 6637, GRI : GG4 & GT7	———	———	———	———	———	———	———	———
	Overlap *	ASTM D 6706	1.25	1.25	1.25	1.25	1.25	1.25	1.25	1.25
Approved Application Usage			3, 4, 5	3, 4, 5	3, 4	3, 4	3, 4	3, 4	3, 4	3, 4

Approved Application Usage:
1 = Steepened Slopes
2 = Reinforcement of Foundations over Soft Soils
3 = Both Steepened Slopes & Reinforcement of Foundations over Soft Soils
4 = Reinforced Embankment
5 = Construction Expedient
* Minimum 3' Overlap

APPROVED GEOSYNTHETIC PRODUCTS
(WOVEN GEOGRID)
APPLICATION AND PROPERTIES

C:\d\projects\standards\structures\2013book\00501-08of12.dgn 6/28/2012 2:04:55 PM rd960rh

TABLE OF WOVEN GEOGRID VALUES

PROPERTY		REQUIRED TEST METHOD	SYNTEEN SF 11	SYNTEEN SF 12	SYNTEEN SF 20	SYNTEEN SF 35	SYNTEEN SF 40	SYNTEEN SF 50	SYNTEEN SF 55	SYNTEEN SF 80	SYNTEEN SF 110
UV Stability (Min. Retained Strength @ 500 hr.)		ASTM D 4355	70%	70%	70%	70%	70%	70%	70%	70%	70%
Tensile Strength (Lb./Ft.)		ASTM D 6637									
Machine Direction	Ultimate (T_{ult})		2,388	2,388	1,672	2,627	3,050	3,731	3,774	5,583	7,462
	2% Strain		526	526	370	462	488	791	736	1,016	1,186
	5% Strain		990	1,042	670	725	970	922	1,159	1,273	1,684
Cross Direction	Ultimate		3,870	5,268	1,630	2,556	3,050	3,933	2,499	2,206	2,179
	2% Strain		578	797	370	399	430	630	604	882	1,274
	5% Strain		792	1,129	670	583	765	815	796	1,563	1,581
Strain @ Ultimate Tensile Strength		ASTM D 6637	12.6%	13.0%	9.4%	14.1%	9.9%	14.2%	11.5%	13.9%	18.8%
Secant Modulus @ (lb./ft.)	2% Strain		26,300	26,300	18,494	23,114	24,408	39,551	36,799	50,807	59,298
	5% Strain		15,840	20,840	13,397	14,499	19,404	18,432	23,174	25,459	33,712
	10% Strain		———	———	15,206	15,234	22,089	18,432	27,137	37,910	27,380
Junction Strength (Lb./Ft.)		GRI : GG2	354	320	———	———	———	———	———	———	———
Soil-Geosynthetic Friction		ASTM D 6706	1.0	1.0	0.8	0.8	0.8	0.8	0.8	0.8	0.8
Creep Resistance-T_{creep} (Lb./Fft.)		ASTM D 5262	———	———	1,005	1,523	1,525	2,201	2,265	3,182	4,029
Creep Reduction Factor (T_{ult}/T_{creep})			———	———	1.66	1.73	2.00	1.70	1.67	1.75	2.02
Installation Damage (RF_c)	Sand	GRI : GG4 & GT7	1.18	1.06	1.05	1.15	1.15	1.08	1.08	1.08	1.08
	Limestone		1.31	1.20	1.75	1.70	1.60	1.55	1.55	1.55	1.35
Durability (RF_d)	Chemical	ASTM D 5322	1.10	1.10	1.10	1.10	1.10	1.10	1.10	1.10	1.10
	Biological	ASTM D1987 & G21	1.10	1.10	1.10	1.10	1.10	1.10	1.10	1.10	1.10
Joint Strength (RF_j)	Mechanical	ASTM D 6637, GRI : GG4 & GT7	———	———	———	———	———	———	———	———	———
	Overlap *	ASTM D 6706	1.10	1.10	1.10	1.10	1.10	1.10	1.10	1.10	1.10
Approved Application Usage			2, 5	2, 5	3	3	3	3	3	3	3

Approved Application Usage:
1 = Steepened Slopes
2 = Reinforcement of Foundations over Soft Soils
3 = Both Steepened Slopes & Reinforcement of Foundations over Soft Soils
4 = Reinforced Embankment
5 = Construction Expedient
* Minimum 3' Overlap

APPROVED GEOSYNTHETIC PRODUCTS
(WOVEN GEOGRID)
APPLICATION AND PROPERTIES

6/28/2012 2:04:57 PM rd960rh C:\d\projects\standards\structures\2013book\00501-09of12.dgn

TABLE OF WOVEN GEOGRID VALUES

PROPERTY		REQUIRED TEST METHOD	TENCATE BXG11	TENCATE BXG12	TENCATE 2XT	TENCATE 3XT	TENCATE 5XT	TENCATE 7XT	TENCATE 8XT	TENCATE 10XT	TENCATE 20XT	TENCATE 22XT	TENCATE 24XT
UV Stability (Min. Retained Strength @ 500 hr.)		ASTM D 4355	70%	70%	70%	70%	70%	70%	70%	70%	70%	70%	70%
Tensile Strength (Lb./Ft.)		ASTM D 6637											
Machine Direction	Ultimate (T_{ult})		2500	2500	2000	3500	4700	5900	7400	9500	13705	17760	27415
	2% Strain		625	625	--	--	--	--	--	--	--	--	--
	5% Strain		1000	1000	950	1056	1740	2160	2520	3120	5340	6700	7000
Cross Direction	Ultimate		2500	4500	2000	--	--	--	--	--	--	--	--
	2% Strain		625	840	--	--	--	--	--	--	--	--	--
	5% Strain		1000	1350	--	--	--	--	--	--	--	--	--
Strain @ Ultimate Tensile Strength		ASTM D 6637	12%	12%	10%	10%	10%	10%	10%	10%	10%	10%	10%
Secant Modulus @ (lb./ft.)	2% Strain		31250	31250	--	--	--	--	--	--	--	--	--
	5% Strain		20000	20000	19000	21120	34800	43200	50400	62400	106800	134000	140000
	10% Strain		--	--	--	--	--	--	--	--	--	--	--
Junction Strength (Lb./Ft.)		GRI : GG2	--	--	--	--	--	--	--	--	--	--	--
Soil-Geosynthetic Friction		ASTM D 6706	0.8	0.8	0.8	0.8	0.8	0.8	0.8	0.8	0.8	0.8	0.8
Creep Resistance-T_{creep} (Lb./Ft.)		ASTM D 5262	--	--	1266	2115	2975	3734	4684	6013	8674	9732	17351
Creep Reduction Factor (T_{ult}/T_{creep})			1.6	1.6	1.58	1.58	1.58	1.58	1.58	1.58	1.58	1.58	1.58
Installation Damage (RF_c)	Sand	GRI : GG4 & GT7	1.05	1.05	1.05	1.05	1.05	1.05	1.05	1.05	1.05	1.05	1.05
	Limestone		1.1	1.1	1.5	1.25	1.25	1.25	1.25	1.25	1.25	1.25	1.25
Durability (RF_d)	Chemical	ASTM D 5322	1.1	1.1	1.1	1.1	1.1	1.1	1.1	1.1	1.1	1.1	1.1
	Biological	ASTM D1987 & G21	1.0	1.0	1.0	1.0	1.0	1.0	1.0	1.0	1.0	1.0	1.0
Joint Strength (RF_j)	Mechanical	ASTM D 6637, GRI : GG4 & GT7	--	--	--	--	--	--	--	--	--	--	--
	Overlap *	ASTM D 6706	--	--	--	--	--	--	--	--	--	--	--
Approved Application Usage			3, 4, 5	3, 4, 5	3	3	3	3	3	3	3	3	3

Approved Application Usage:
1 = Steepened Slopes
2 = Reinforcement of Foundations over Soft Soils
3 = Both Steepened Slopes & Reinforcement of Foundations over Soft Soils
4 = Reinforced Embankment
5 = Construction Expedient
** Minimum 3' Overlap*

APPROVED GEOSYNTHETIC PRODUCTS
(WOVEN GEOGRID)
APPLICATION AND PROPERTIES

C:\d\projects\standards\structures\2013book\00501-10of12.dgn 6/28/2012 2:04:59 PM rd960rh

TABLE OF EXTRUDED GEOGRID VALUES

PROPERTY		REQUIRED TEST METHOD	TENSAR BX 4100	TENSAR BX 4200	TENSAR BX 1100	TENSAR BX 1120	TENSAR BX 1200	TENSAR BX 1220	TENSAR BX 1500
UV Stability (Min. Retained Strength @ 500 hr.)		ASTM D 4355	90%	90%	90%	100%	90%	100%	90%
Tensile Strength (Lb./Ft.)		ASTM D 6637							
Machine Direction	Ultimate (T_{ult})		860	1,270	850	850	1,315	1,315	1,790
	2% Strain		240	370	280	280	410	410	580
	5% Strain		480	705	580	580	810	810	1,200
Cross Direction	Ultimate		875	1,370	1,300	1,300	1,975	1,975	2,055
	2% Strain		300	500	450	450	670	670	685
	5% Strain		635	960	920	920	1,360	1,360	1,370
Strain @ Ultimate Tensile Strength		ASTM D 6637	10%	10%	10%	10%	10%	10%	10%
Secant Modulus @ (lb./ft.)	2% Strain		11,995	18,506	14,000	14,000	20,500	20,500	29,000
	5% Strain		9,596	14,092	11,600	11,600	16,200	16,200	27,400
	10% Strain		———	———	———	———	———	———	———
Junction Strength (Lb./Ft.)		GRI : GG2	90%	90%	790/1,210	93%	93%	93%	93%
Soil-Geosynthetic Friction		ASTM D 6706	———	0.95	0.90	0.90	0.90	0.90	0.90
Creep Resistance-T_{creep} (Lb./Ft.)		ASTM D 5262	250	420	280	280	425	425	575
Creep Reduction Factor (T_{ult}/T_{creep})			3.5	3.27	3.1	3.1	3.1	3.1	3.1
Installation Damage (RF_C)	Sand	GRI : GG4 & GT7	1.10	1.10	1.10	1.10	1.10	1.10	1.10
	Limestone		1.43	1.35	1.35	1.35	1.35	1.35	1.35
Durability (RF_d)	Chemical	ASTM D 5322	1.1	1.1	1.1	1.1	1.1	1.1	1.1
	Biological	ASTM D1987 & G21	1.0	1.0	1.0	1.0	1.0	1.0	1.0
Joint Strength (RF_j)	Mechanical	ASTM D 6637, GRI : GG4 & GT7	———	———	———	———	———	———	———
	Overlap *	ASTM D 6706	1.0	1.0	1.0	1.0	1.0	1.0	1.0
Approved Application Usage			3, 4, 5	3, 4, 5	3, 4, 5	3, 4, 5	3, 4, 5	3, 4, 5	3, 4, 5

Approved Application Usage:
1 = Steepened Slopes
2 = Reinforcement of Foundations over Soft Soils
3 = Both Steepened Slopes & Reinforcement of Foundations over Soft Soils
4 = Reinforced Embankment
5 = Construction Expedient
* Minimum 3' Overlap

APPROVED GEOSYNTHETIC PRODUCTS
(EXTRUDED GEOGRID)
APPLICATION AND PROPERTIES

6/28/2012 2:05:01 PM rd960rh C:\d\projects\standards\structures\2013book\00501-11of12.dgn

TABLE OF EXTRUDED GEOGRID VALUES

PROPERTY		REQUIRED TEST METHOD	TENSAR UX 1400 HS UX 1400 MSE UX MESA 3	TENSAR UX 1500 HS UX 1500 MSE UX MESA 4	TENSAR UX 1600 HS UX 1600 MSE UX MESA 5	TENSAR UX 1700 HS UX 1700 MSE UX MESA 6	TENAX MS 220	TENAX MS 330	COMBIGRID 30/30 Q1 151 GRK 3	SECUGRID 20/20 Q1	SECUGRID 30/30 Q1
UV Stability (Min. Retained Strength @ 500 hr.)		ASTM D 4355	90%	90%	90%	90%	85%	85%	90%	90%	90%
Tensile Strength (Lb./Ft.)		ASTM D 6637									
Machine Direction	Ultimate (T_{ult})		4,790	7810	9,860	11,980	925	1,370	2,055	1,646	2,055
	2% Strain		1,100	1,850	2,330	2,740	300	418	686	549	686
	5% Strain		2,130	3,560	3,980	5,140	615	925	1,475	1,029	1,475
Cross Direction	Ultimate		———	———	———	———	1,400	2,100	2,055	1,646	2,055
	2% Strain		———	———	———	———	445	616	686	549	686
	5% Strain		———	———	———	———	890	1,340	1,475	1,029	1,475
Strain @ Ultimate Tensile Strength		ASTM D 6637	10%	10%	10%	10%	12%	12%	8%	9%	7.5%
Secant Modulus @ (lb./ft.)	2% Strain		55,000	92,500	116,500	137,000	15,000	20,900	34,300	27,450	34,300
	5% Strain		42,600	71,200	79,600	102,800	12,330	18,500	29,500	20,580	29,500
	10% Strain		———	———	———	———	———	———	———	———	———
Junction Strength (Lb./Ft.)		GRI : GG2	90%	90%	90%	90%	835	1,230	337	549	617
Soil-Geosynthetic Friction		ASTM D 6706	0.462	0.462	0.462	0.462	———	———	0.65	0.93	0.93
Creep Resistance-T_{creep} (Lb./Ft.)		ASTM D 5262	1,970	3,000	3,960	4,975	———	———	726	581	726
Creep Reduction Factor (T_{ult}/T_{creep})			2.43	2.60	2.49	2.41	3.5	3.5	2.83	2.83	2.83
Installation Damage (RF_c)	Sand	GRI : GG4 & GT7	1.10	1.10	1.10	1.10	1.1	1.1	1.1	1.1	1.1
	Limestone		1.20	1.20	1.20	1.20	1.1	1.1	1.1	1.1	1.1
Durability (RF_d)	Chemical	ASTM D 5322	1.1	1.1	1.1	1.1	1.1	1.1	1.1	1.1	1.1
	Biological	ASTM D1987 & G21	1.0	1.0	1.0	1.0	1.0	1.0	1.0	1.0	1.0
Joint Strength (RF_j)	Mechanical	ASTM D 6637, GRI : GG4 & GT7	1.0	1.0	1.0	1.0	1.0	1.0	———	———	———
	Overlap *	ASTM D 6706	1.0	1.0	1.0	1.0	1.0	1.0	1.0	1.0	1.0
Approved Application Usage			3	3	3	3	2, 5	2, 5	2, 5	2, 5	2, 5

Approved Application Usage:
1 = Steepened Slopes
2 = Reinforcement of Foundations over Soft Soils
3 = Both Steepened Slopes & Reinforcement of Foundations over Soft Soils
4 = Reinforced Embankment
5 = Construction Expedient
** Minimum 3' Overlap*

APPROVED GEOSYNTHETIC PRODUCTS (EXTRUDED GEOGRID) APPLICATION AND PROPERTIES

C:\d\projects\standards\structures\2013book\00501-12of12.dgn rd960rh 2:05:03 PM 6/28/2012

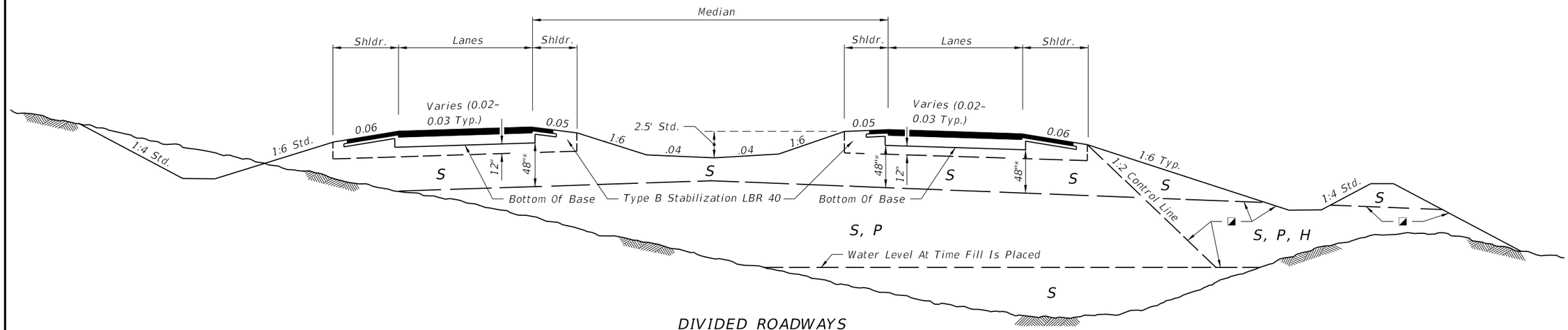

DIVIDED ROADWAYS

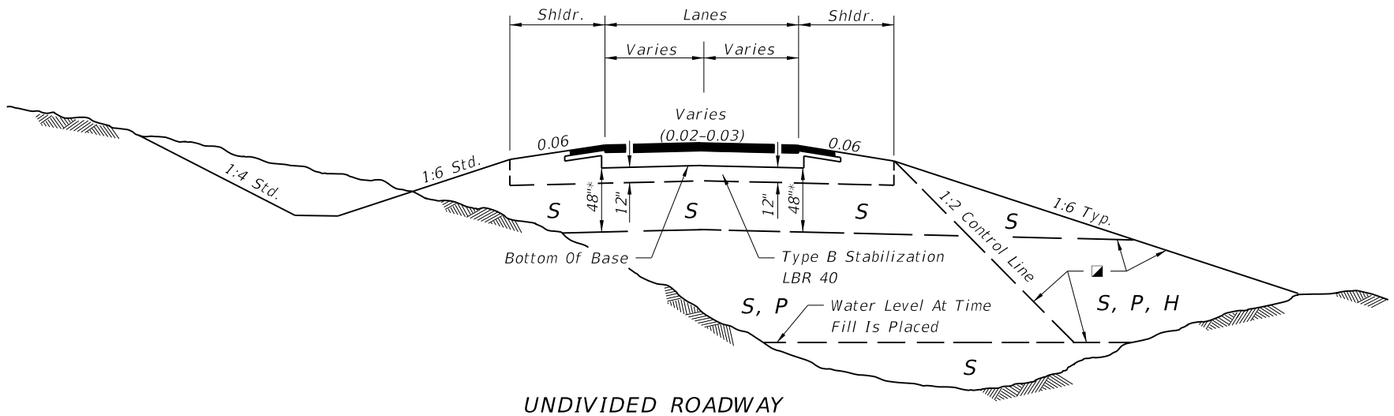

UNDIVIDED ROADWAY

SYMBOL	SOIL	CLASSIFICATION (AASHTO M 145)
S	Select	A-1, A-3, A-2-4 **
P	Plastic	A-2-5, A-2-6, A-2-7, A-4, A-5, A-6, A-7 (ALL WITH LL < 50)
H	High Plastic	A-2-5, A-2-7, A-5 Or A-7 (ALL WITH LL > 50)
M	Muck	A-8

Classification listed left to right in order of preference.

◪ See General Notes Nos. 4 & 5 for utilization of soils classified as organic material or muck.

** Certain types of A-2-4 material are likely to retain excess moisture and may be difficult to dry and compact. They should be used in the embankment above the water level existing at time of construction. They may be used in the subgrade portion of the roadbed when approved by the District Materials Engineer. A-2-4 material placed below the existing water level must be nonplastic and contain less than 15% passing the No. 200 U.S. Standard sieve.

* For cut sections this dimension may be reduced to 24"; see Index No. 500. For minor collectors and local facilities this dimension may be reduced to 18".

FLEXIBLE PAVEMENT

GENERAL NOTES

1. Roadway dimensions are representative. Subgrade dimensions and control lines are standard. The details shown on this Index do not supersede the details shown in the plans or on Index Nos. 500 or 506.

2. Plastic (P) soils may be placed above the existing water level (at the time of construction) to within 4 feet of the proposed base. It should be placed uniformly in the lower portion of the embankment for some distance along the project rather than full depth for short distances.

3. High Plastic (H) soils excavated within the project limits may be used in embankment construction as indicated on this index. High Plastic soils are not to be used for embankment construction when obtained from outside the project limits.

4. Select (S) soils having an average organic content of more than two and one-half (2.5) percent, or having an individual test value which exceeds four (4) percent, shall not be used in the subgrade portion of the roadbed. Select (S), Plastic (P), or High Plastic (H) soils having an average organic content of more than five (5) percent, or an organic content individual test result which exceeds seven (7) percent, shall not be used in the portion of embankment inside the control line, unless written authorization is provided by the District Geotechnical Engineer; these soils may be used for embankment construction outside the control line, unless restricted by the plans or otherwise specified in the plans, provided they can be compacted sufficiently to sustain a drivable surface for operational vehicles as approved by the Engineer. Average organic content shall be determined from the test results from a minimum of three randomly selected samples from each stratum or stockpile of a particular material. Tests shall be performed in accordance with AASHTO T 267 on the portion of a sample passing the No. 4 sieve.

5. Highly organic soils, composed primarily of partially decayed organic matter, often dark brown or black in color with an odor of decay, and sometimes fibrous, shall be designated as muck. Further, any stratum or stockpile of soil which contains pockets of highly organic material may be designated as Muck (M). Highly organic soils shall not be used within the subgrade or embankment portion of the roadbed, with the exception of muck used as a supplement to construct a finish soil layer as described in Section 162 of the FDOT Standard Specifications.

DESIGN NOTES

1. The designer shall take into consideration the expectancy of roadway widening to the outside, and where widening is anticipated, specify in the plans the location of the future widening control line for utilization of High Plastic (H) soils and/or soils classified as organic material in the embankment.

2. The designer shall take into consideration the position of the drainage swales in the portion of the embankment where Plastic (P) soils, High Plastic (H) soils, or soils classified as organic material would be allowed. The designer shall limit the use of Plastic (P) soils, High Plastic (H) soils, and/or soils classified as organic material to locations that will not inhibit the infiltration of stormwater from the swales.

C:\d\projects\standards\roadway\00500-s\00505-01.dgn
rd960rh
2:05:06 PM
6/28/2012

LAST REVISION	REVISION	DESCRIPTION:			INDEX NO.	SHEET NO.
07/01/07			FDOT DESIGN STANDARDS 2013	EMBANKMENT UTILIZATION	505	1

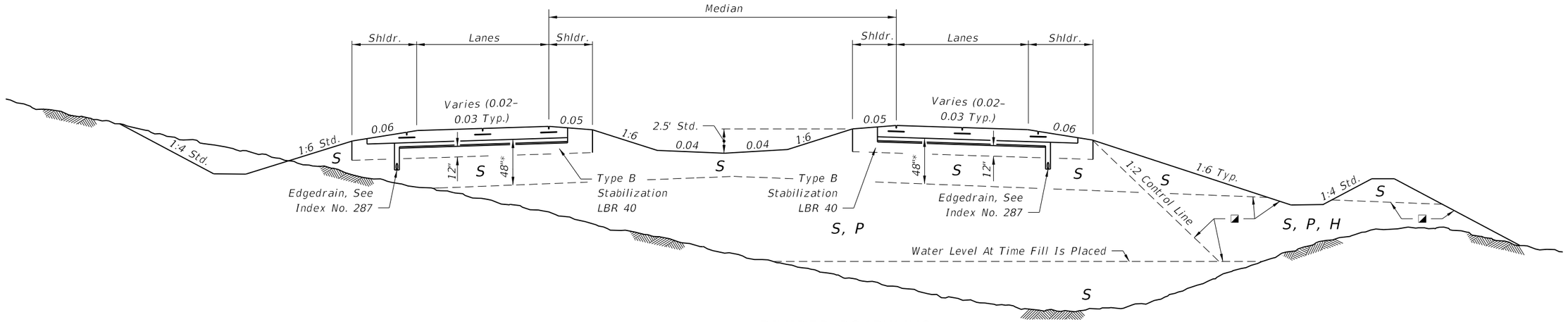

DIVIDED ROADWAYS

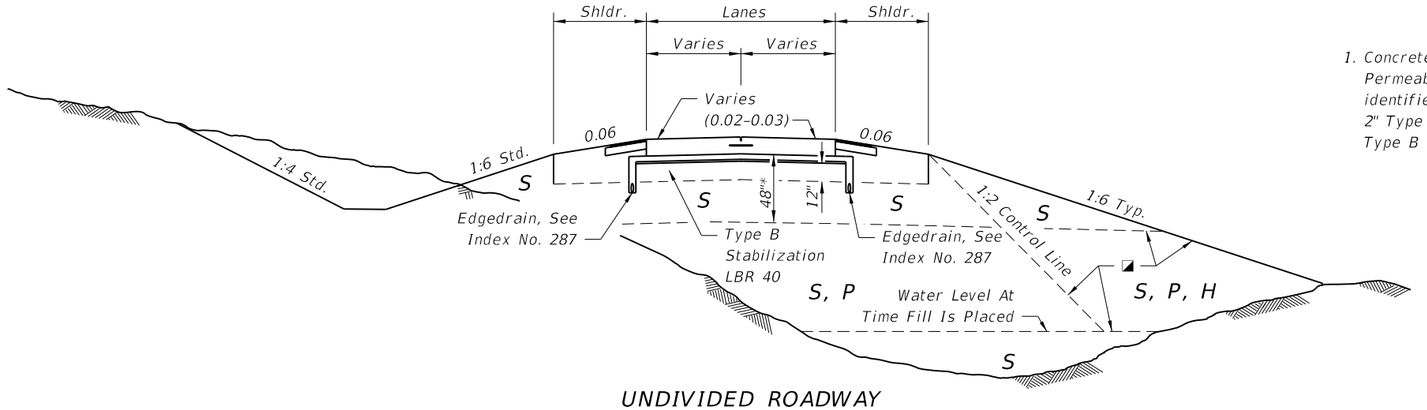

UNDIVIDED ROADWAY

DESIGN NOTE

1. Concrete pavement is to be placed over 4" of Asphalt Treated Permeable Base (ATPB) or Cement Treated Permeable Base (CTPB) as identified in the plans. This will be placed on a separator layer using 2" Type SP. This will be placed on a working platform using 12" of Type B Stabilization.

SYMBOL	SOIL	CLASSIFICATION (AASHTO M 145)
S	Select	A-1, A-3, A-2-4 **
P	Plastic	A-2-5, A-2-6, A-2-7, A-4, A-5, A-6, A-7 (ALL WITH LL < 50)
H	High Plastic	A-2-5, A-2-7, A-5 Or A-7 (ALL WITH LL > 50)
M	Muck	A-8

Classification listed left to right in order of preference.

◪ See General Notes Nos. 4 & 5 for utilization of soils classified as organic material or muck.

** Certain types of A-2-4 material are likely to retain excess moisture and may be difficult to dry and compact. They should be used in the embankment above the water level existing at time of construction. They may be used in the subgrade portion of the roadbed when approved by the District Materials Engineer. A-2-4 material placed below the existing water level must be nonplastic and contain less than 15% passing the No. 200 U.S. Standard sieve.

* For cut sections this dimension may be reduced to 24"; see Index No. 500. For minor collectors and local facilities this dimension may be reduced to 18".

RIGID PAVEMENT - TREATED PERMEABLE BASE OPTION

C:\d\projects\standards\roadway\00500-s\00505-02.dgn
rd960rh
2:05:08 PM
6/28/2012

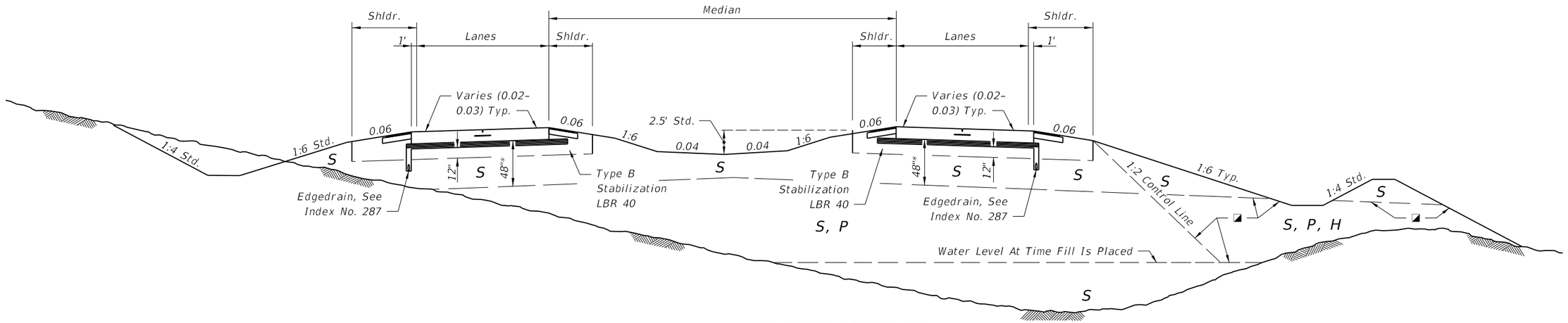

DIVIDED ROADWAYS

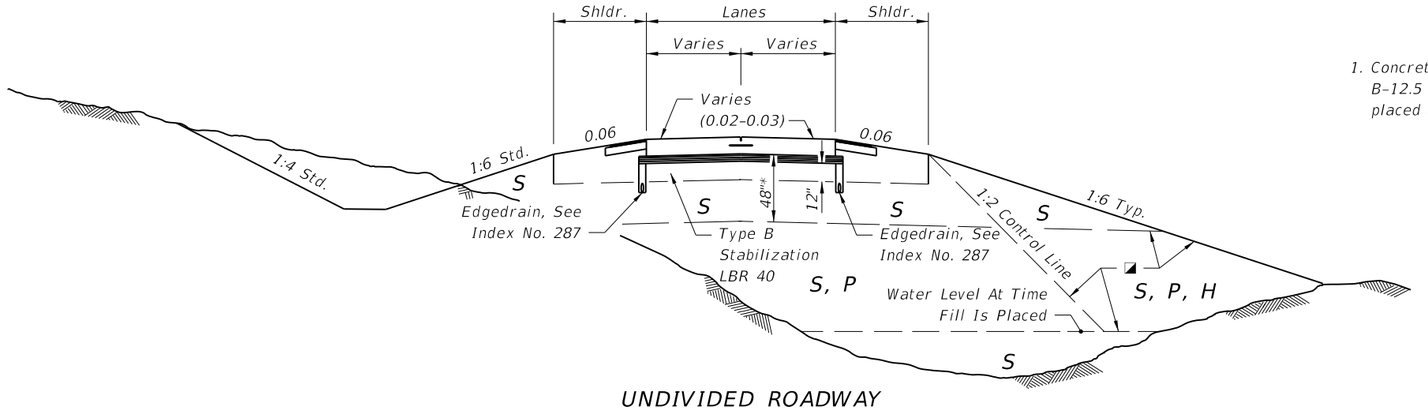

UNDIVIDED ROADWAY

DESIGN NOTE

1. Concrete pavement is to be placed over Optional Base Group 1 Type B-12.5 only Asphalt Base as identified in the plans. This will be placed on a working platform using 12" of Type B Stabilization.

SYMBOL	SOIL	CLASSIFICATION (AASHTO M 145)
S	Select	A-1, A-3, A-2-4 **
P	Plastic	A-2-5, A-2-6, A-2-7, A-4, A-5, A-6, A-7 (ALL WITH LL < 50)
H	High Plastic	A-2-5, A-2-7, A-5 Or A-7 (ALL WITH LL > 50)
M	Muck	A-8

Classification listed left to right in order of preference.

◪ See General Notes Nos. 4 & 5 for utilization of soils classified as organic material or muck.

** Certain types of A-2-4 material are likely to retain excess moisture and may be difficult to dry and compact. They should be used in the embankment above the water level existing at time of construction. They may be used in the subgrade portion of the roadbed when approved by the District Materials Engineer. A-2-4 material placed below the existing water level must be nonplastic and contain less than 15% passing the No. 200 U.S. Standard sieve.

* For cut sections this dimension may be reduced to 24"; see Index No. 500. For minor collectors and local facilities this dimension may be reduced to 18".

RIGID PAVEMENT - ASPHALT BASE OPTION

6/28/2012 2:05:10 PM rd960rh C:\d\projects\standards\roadway\00500-s\00505-03.dgn

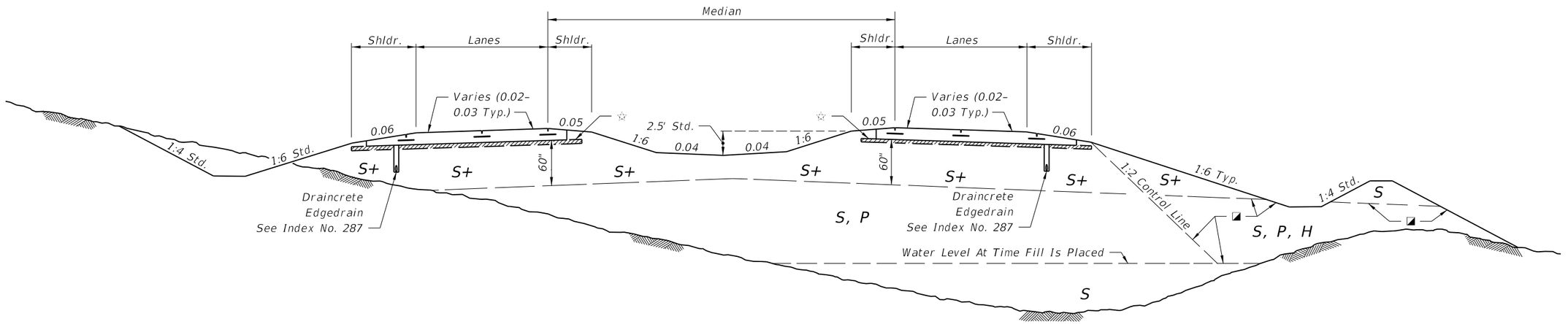

DIVIDED ROADWAYS

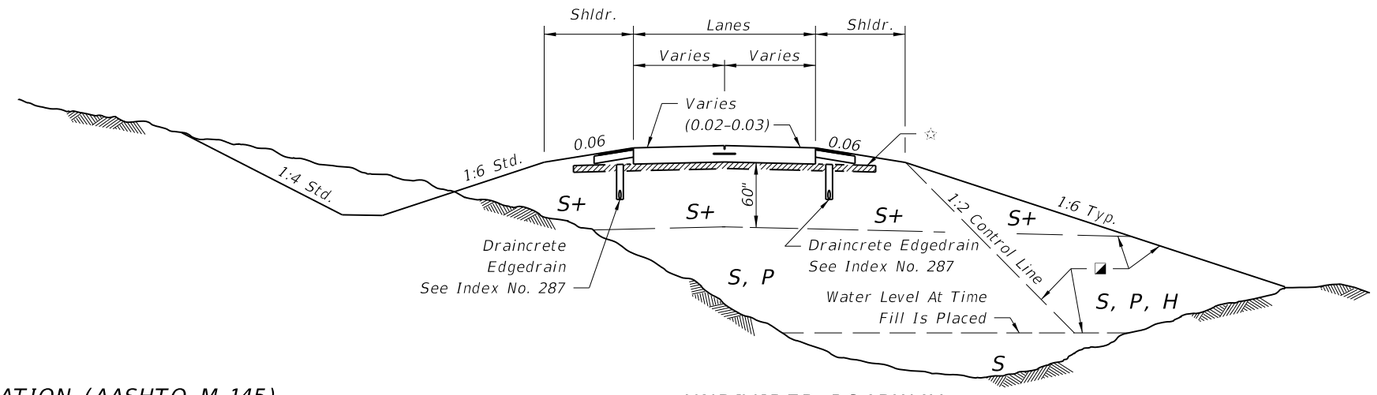

UNDIVIDED ROADWAY

SYMBOL	SOIL	CLASSIFICATION (AASHTO M 145)
S	Select	A-1, A-3, A-2-4 **
S+	Special Select	A-3 *** With Minimum Average Lab Permeability of $5x10^{-5}$ cm/sec. (0.14 ft./day) as per FM 1-T215
P	Plastic	A-2-5, A-2-6, A-2-7, A-4, A-5, A-6, A-7 (ALL WITH LL<50)
H	High Plastic	A-2-5, A-2-7, A-5 Or A-7 (ALL WITH LL>50)
M	Muck	A-8

Classification listed left to right in order of preference.

◪ See General Notes Nos. 4 & 5 for utilization of soils classified as organic material or muck.

*** When allowed by the plans, some types of A-2-4 material may be approved in writing by the District Materials Engineer. This material must meet the minimum lab permeability requirement, be nonplastic, and not exceed 12% passing the No. 200 U.S. Standard sieve.

** Certain types of A-2-4 material are likely to retain excess moisture and may be difficult to dry and compact. They should be used in the embankment above the water level existing at time of construction. A-2-4 material placed below the existing water level must be nonplastic and contain less than 15% passing the No. 200 U.S. Standard sieve.

☆ 3" of #57 or #89 Coarse Aggregate Mixed Into Top 6".

Note: SPECIAL SELECT SOIL OPTION may be used only when approved in writing by the District Materials Engineer and shown in the plans.

RIGID PAVEMENT - SPECIAL SELECT SOIL OPTION

C:\d\projects\standards\roadway\00500-s\00505-04.dgn
rd960rh
2:05:12 PM
6/28/2012

LAST REVISION	REVISION	DESCRIPTION:		FDOT DESIGN STANDARDS 2013	EMBANKMENT UTILIZATION	INDEX NO.	SHEET NO.
07/01/07						505	4

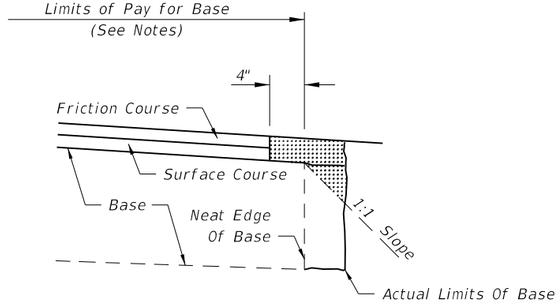

NOTES

1. All material in the shaded area is excess base to be removed.
2. The cost for removal of excess base material shall be included in the contract unit price for base.
3. Payment for base shall be calculated using normal width.

REMOVAL OF EXCESS BASE MATERIAL

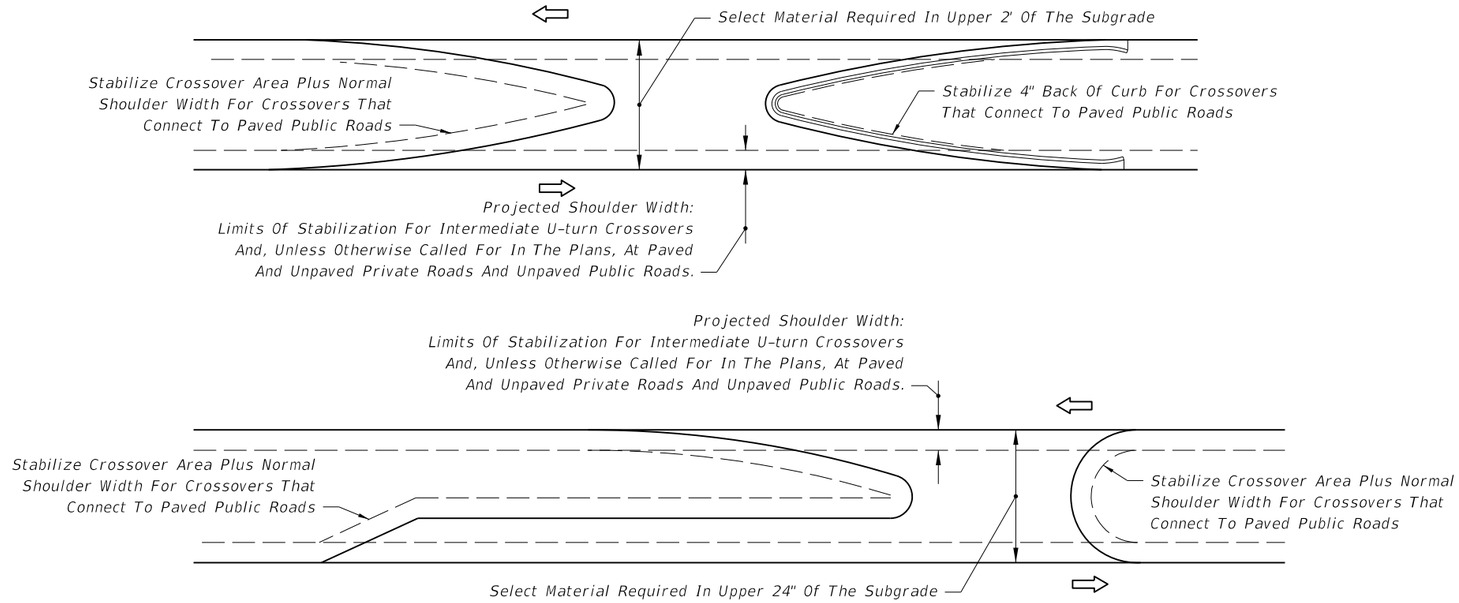

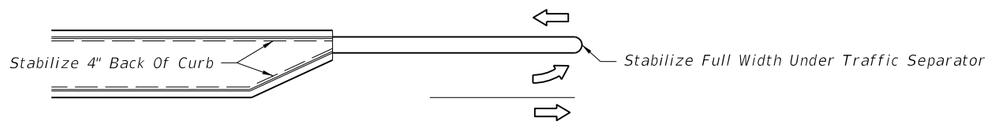

NOTES

1. When the median has curb or curb and gutter, stabilize 4" back of curb.
2. When the median has shoulder with no curb or curb and gutter, stabilize to normal shoulder width.
3. See the details above for stabilizing requirements at crossroads.
4. Stabilize entire area under all paved traffic islands.
5. Stabilize full width under all traffic separators.
6. Select material as defined on Index No. 505. For minor collectors and local facilities the depth of select material thickness may be reduced from 24" to 18".

MEDIAN STABILIZING DETAILS

C:\d*projects\standards\roadway\00500-s\00506-01.dgn rd960rh 2:05:14 PM 6/28/2012

LAST REVISION	REVISION	DESCRIPTION:			INDEX NO.	SHEET NO.
00			FDOT DESIGN STANDARDS 2013	MISCELLANEOUS EARTHWORK DETAILS	506	1

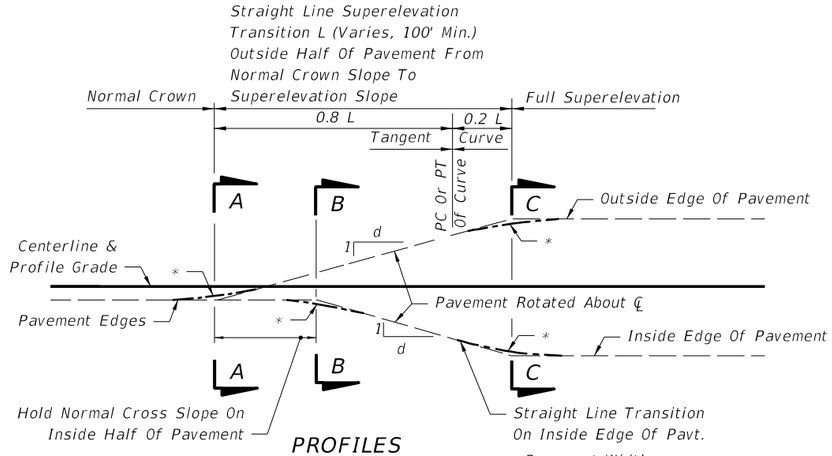

SLOPE RATIOS FOR SUPERELEVATION TRANSITIONS			
SECTION	DESIGN SPEED, MPH		
	45-50	55-60	65-70
	1 : d		
2 Lane & 4 Lane	1:200	1:225	1:250
6 Lane	1:160	1:180	1:200
8 Lane	1:150	1:170	1:190

The length of superelevation transition is to be determined by the relative slope between the travel way edge of pavement and the profile grade, except that the minimum length of transition shall be 100 ft.

* Short Vertical Curves Are To Be Used On Construction To Avoid Angular Breaks In Edge Profiles

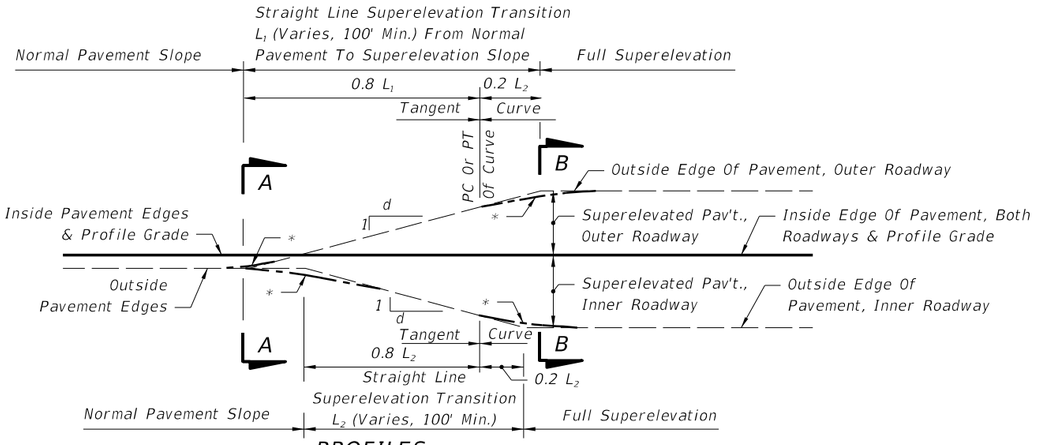

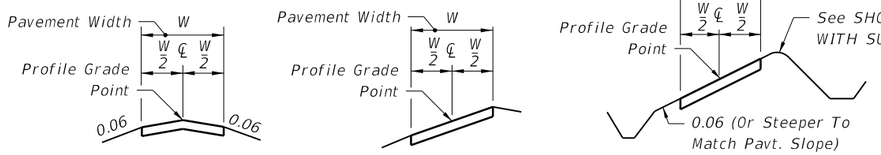

2-LANE, 4-LANE OR 6-LANE PAVEMENT, NO MEDIAN

THESE TRANSITION DETAILS ARE TO APPLY IN ALL CASES, EXCEPT UNDER THE FOLLOWING CONDITIONS:

1. Curves of insufficient length.
2. Insufficient tangent length between curves.
3. Deficient transition distance between a curve and other control point(s).
4. At PCC's or PRC's (Runoff rates are applicable).

Transitions for these exceptions are to be as detailed in the plans.

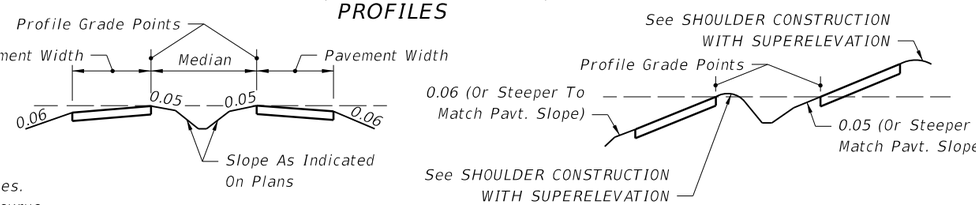

4-LANE OR 6-LANE PAVEMENT WITH MEDIAN

SUPERELEVATION TRANSITIONS

SHOULDER ON HIGH SIDE: A shoulder slope of 0.06 downward from the edge of pavement will be maintained until a 0.07 break in slope at the pavement edge is reached due to superelevation of the pavement. As the pavement superelevation increases, the 0.07 break in slope will be maintained and the shoulder flattened until the shoulder slope reaches the minimum of 0.02 downward from the edge of pavement. Any further increase in pavement superelevation will necessitate sloping the inside half of the shoulder toward the pavement and the outer half outward, both at 0.02 for superelevations 0.06–0.09 and both at 0.03 for superelevation 0.10.

SHOULDER ON LOW SIDE: Maintain 0.06 drop across inside shoulder until pavement cross slope reaches 0.06. For pavement cross slopes greater than 0.06, shoulder to have same slope as pavement.

These slopes are the same as those shown pictorially on sheet 2.

NOTE:
These details apply to both paved and grassed shoulders. For median shoulders use 0.05 in lieu of 0.06.

DEGREE OF CURVE (D)	DESIGN SPEED, V MPH						
	30	40	45/50	55	60	65	70
0°15'	NC	NC	NC	NC	NC	NC	NC
0°30'	NC	NC	NC	NC	RC	RC	RC
0°45'	NC	NC	RC	RC	0.023	0.025	0.028
1°00'	NC	NC	0.021	0.025	See Table To Right		
1°30'	NC	0.021					
2°00'	RC						

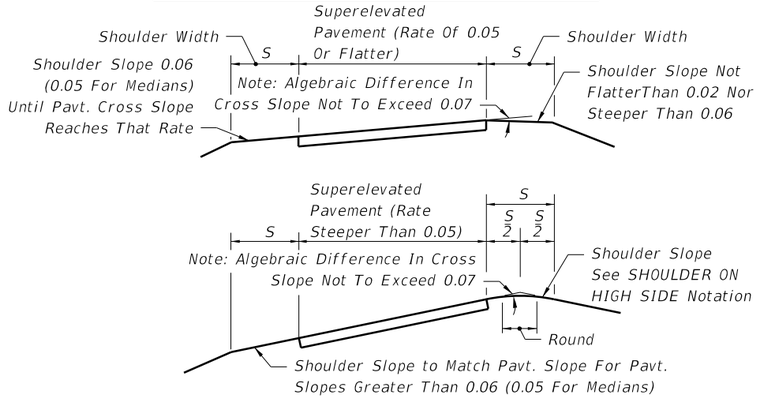

SHOULDER CONSTRUCTION WITH SUPERELEVATION

RADIUS OF CURVE - FEET

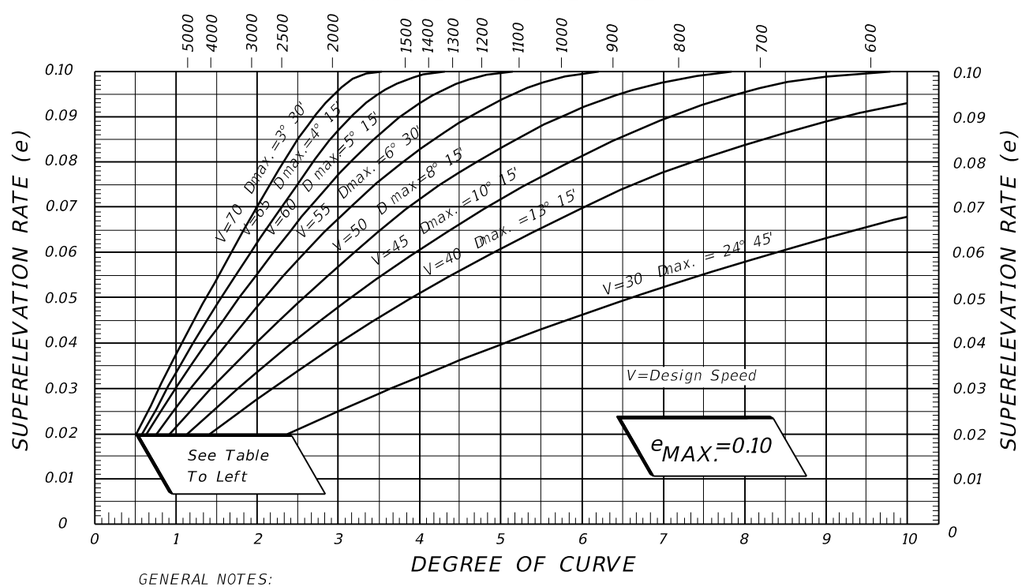

GENERAL NOTES:
1. For curves in Urban Highways and high speed Urban Streets, see Index No. 511.

DESIGN SUPERELEVATION RATES FOR RURAL HIGHWAYS, URBAN FREEWAYS AND HIGH SPEED URBAN HIGHWAYS

LAST REVISION	REVISION	DESCRIPTION:		FDOT DESIGN STANDARDS 2013	SUPERELEVATION - RURAL HIGHWAYS, URBAN FREEWAYS AND HIGH SPEED URBAN HIGHWAYS	INDEX NO.	SHEET NO.
00						510	1

6/28/2012 2:05:22 PM rd960rh C:\d\projects\standards\roadway\00500-s\00510-01.dgn

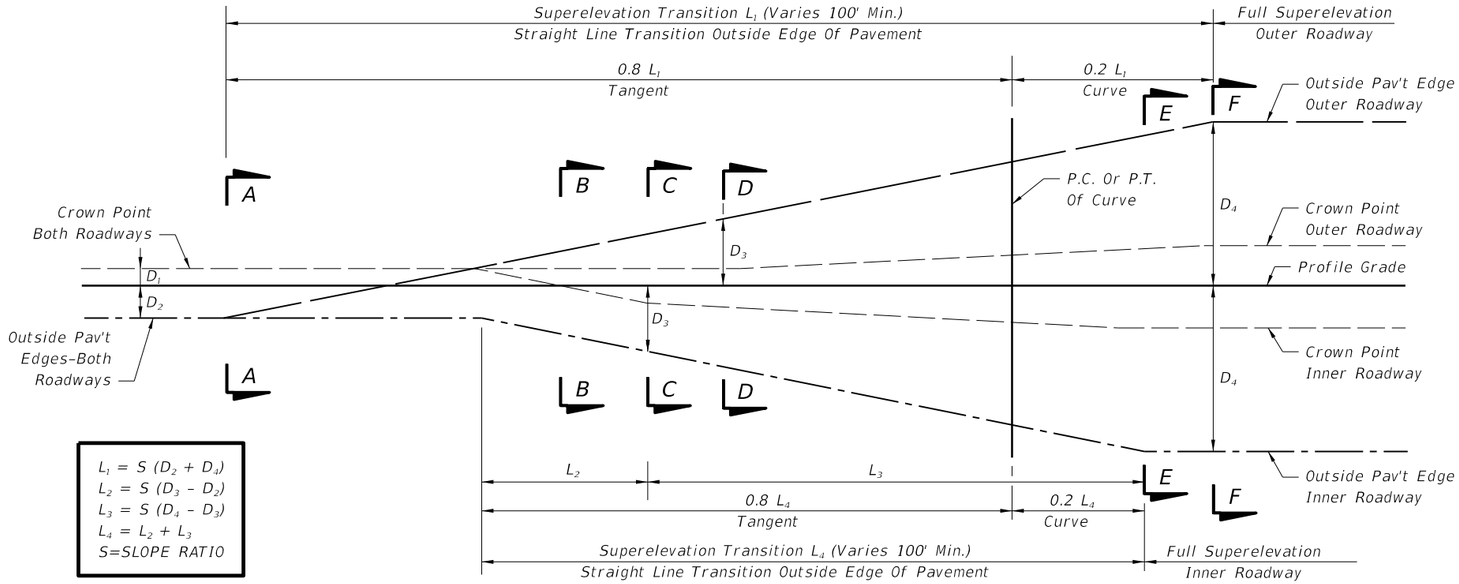

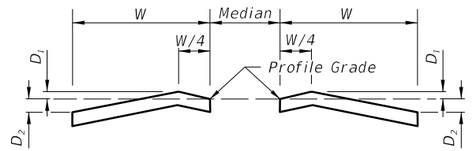

SECTION A-A
NORMAL CROWNED SECTION

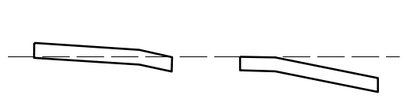

SECTION B-B
SUPERELEVATION SECTION LT. & RT.

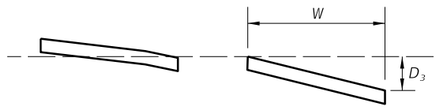

SECTION C-C
SUPERELEVATION SECTION LT.
PLANE INCLINED SECTION RT.

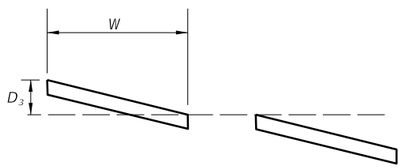

SECTION D-D
PLANE INCLINED SECTION LT.
SUPERELEVATION TRANSITION RT.

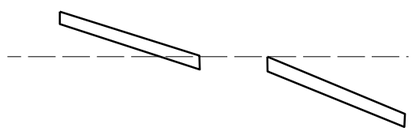

SECTION E-E
SUPERELEVATION TRANSITION LT.
FULL SUPERLEVATION RT.

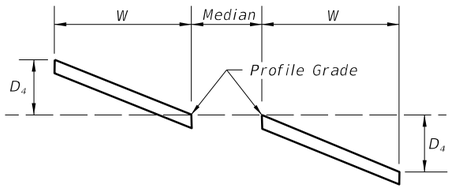

SECTION F-F
FULL SUPERELEVATION LT. & RT.

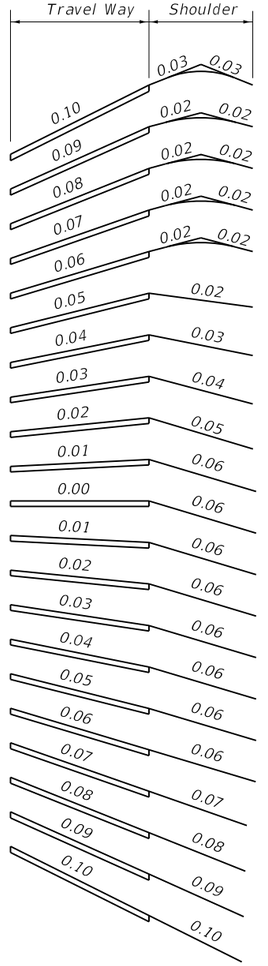

SLOPES OF TRAVELED WAY
AND ABUTTING SHOULDERS

SHOULDER SLOPES ON
SUPERELEVATION SECTIONS

8-LANE PAVEMENT WITH ONE LANE SLOPED TO MEDIAN

LAST REVISION	REVISION	DESCRIPTION:		FDOT DESIGN STANDARDS 2013	SUPERELEVATION - RURAL HIGHWAYS, URBAN FREEWAYS AND HIGH SPEED URBAN HIGHWAYS	INDEX NO.	SHEET NO.
00						510	2

C:\d\projects\standards\roadway\00500-s\00510-02.dgn
rd960rh
2:05:25 PM
6/28/2012

SUPERELEVATION RATES (e) FOR URBAN HIGHWAYS AND HIGH SPEED URBAN STREETS

$e_{max.} = 0.05$

TABULATED VALUES

Degree Of Curve (D)	Radius (R) (Ft.)	Design Speed (mph) 30	35	40	45	50
2° 00'	2,865	NC	NC	NC	NC	NC
2° 15'	2,546					RC
2° 45'	2,083				NC	
3° 00'	1,910				RC	
3° 45'	1,528			NC		
4° 00'	1,432			RC		
4° 45'	1,206					RC
5° 00'	1,146		NC			0.023
5° 15'	1,091		RC			0.027
5° 30'	1,042					0.030
5° 45'	996					0.035
6° 00'	955				RC	0.040
6° 15'	917				0.022	0.045
6° 30'	881				0.024	0.050
6° 45'	849				0.027	Dmax.= 6° 30'
7° 00'	819	NC			0.030	
7° 15'	790	RC			0.033	
7° 30'	764				0.037	
7° 45'	739				0.041	
8° 00'	716			RC	0.045	
8° 15'	694			0.022	0.050	
8° 30'	674			0.025	Dmax.= 8° 15'	
8° 45'	655			0.027		
9° 00'	637			0.030		
9° 30'	603			0.034		
10° 00'	573			0.040		
10° 30'	546		RC	0.047		
11° 00'	521		0.023	Dmax.= 10° 45'		
11° 30'	498		0.026			
12° 00'	477		0.030			
13° 00'	441		0.036			
14° 00'	409	RC	0.045			
15° 00'	382	0.023	Dmax.= 14° 15'			
16° 00'	358	0.027				
17° 00'	337	0.032				
18° 00'	318	0.038				
19° 00'	302	0.043				
20° 00'	286	0.050				
		Dmax.= 20° 00'				

NC = Normal Crown

RC = Reverse Crown (+0.02 Superelevation)

CHARTED VALUES

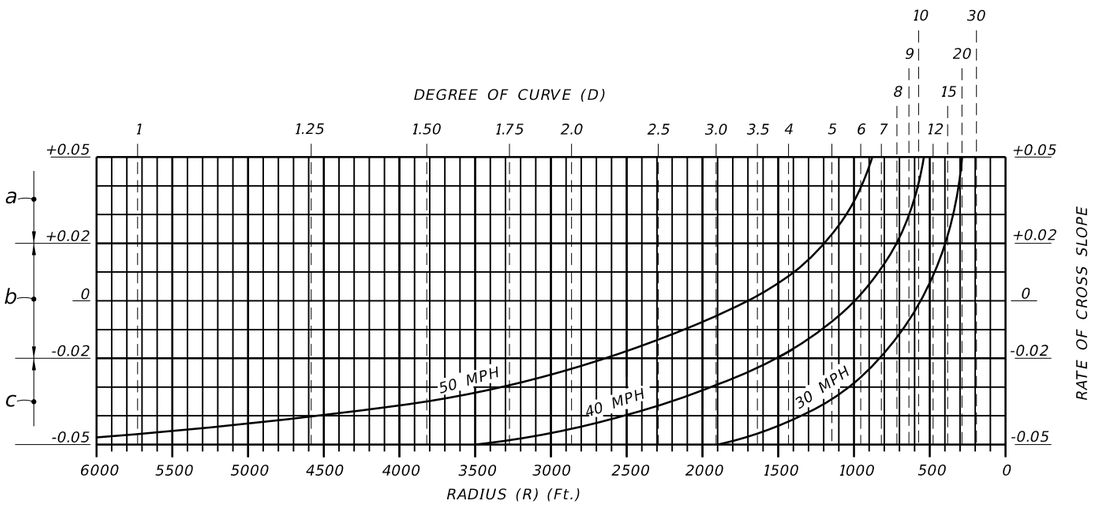

a: When the speed curves and the degree of curve or radius lines intersect above this line, the pavement is to be superelevated (positive slope) at the rates indicated at the lines intersecting points.

b: When the speed curves and the degree of curve or radius lines intersect between these limits, the pavement is to be superelevated at the rate of 0.02 (positive slope).

c: When the speed curves and the degree of curve or radius lines intersect below this line. The pavement is to have normal crown (typically 0.02 and 0.03 downward slopes).

GENERAL NOTES

1. Maximum rate of superelevation for urban highways and high speed urban streets shall be 0.05.
2. Superelevation shall be obtained by rotating the plane successively about the break points of the section until the plane has attained a slope equal to that required by the chart. Should the rotation traverse the entire section and further superelevation be required, the remaining rotation of the plane shall be about the low edge of the inside travel lane. Crown is to be removed in the auxiliary lane to the outside of the curve only when the adjoining travel lanes require positive superelevation.
3. When positive superelevation is required, the slope of the gutter on the high side shall be a continuation of the slope of the superelevated pavement.
4. In construction, short vertical curves shall be placed at all angular profile breaks within the limits of the superelevation transition.
5. The variable superelevation transition length "L" shall have a minimum value of 50 feet for design speeds under 40 MPH and 75 feet for design speeds of 40 MPH or greater.
6. Roadway sections having lane arrangements different from those shown, but composed of a series of planes, shall be superelevated in a similar manner.
7. For superelevation of lower speed urban streets, see the FDOT 'Manual Of Uniform Minimum Standards For Design, Construction And Maintenance For Streets And Highways'. For superelevation of curves on rural highways, urban freeways and high speed urban highways, see Index No. 510.

$e_{max.} = 0.05$

SUPERELEVATION FOR URBAN HIGHWAYS AND HIGH SPEED URBAN STREETS

C:\d\projects\standards\roadway\00500-s\00511-01.dgn rd960rh 2:05:26 PM 6/28/2012

LAST REVISION	REVISION	DESCRIPTION:		FDOT DESIGN STANDARDS 2013	SUPERELEVATION URBAN HIGHWAYS AND STREETS	INDEX NO.	SHEET NO.
00						511	1

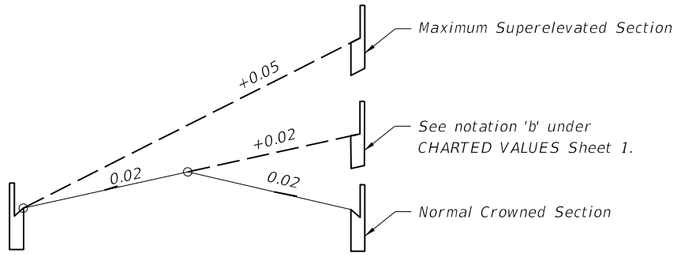

TWO TRAVEL LANES EACH DIRECTION

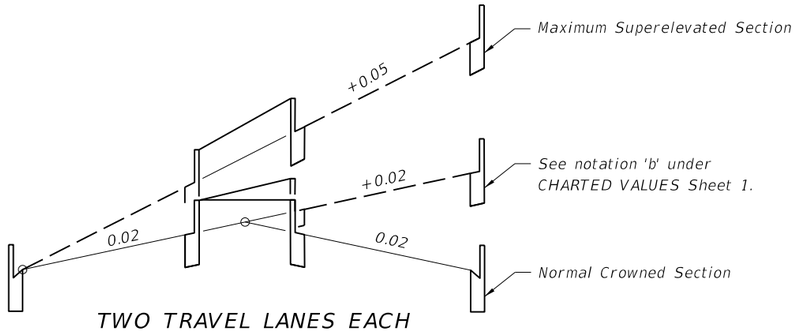

TWO TRAVEL LANES EACH DIRECTION WITH MEDIAN

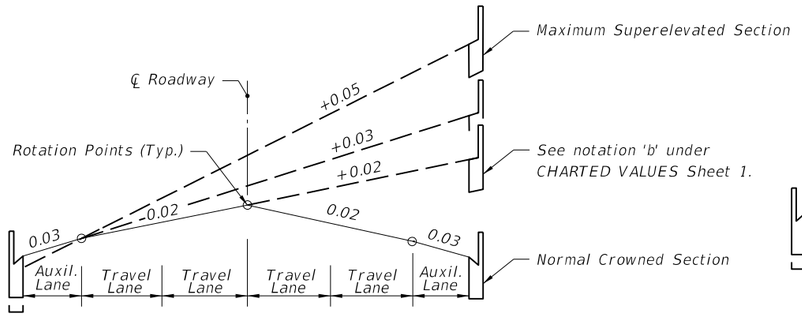

TWO TRAVEL LANES EACH DIRECTION WITH AUXILIARY LANES

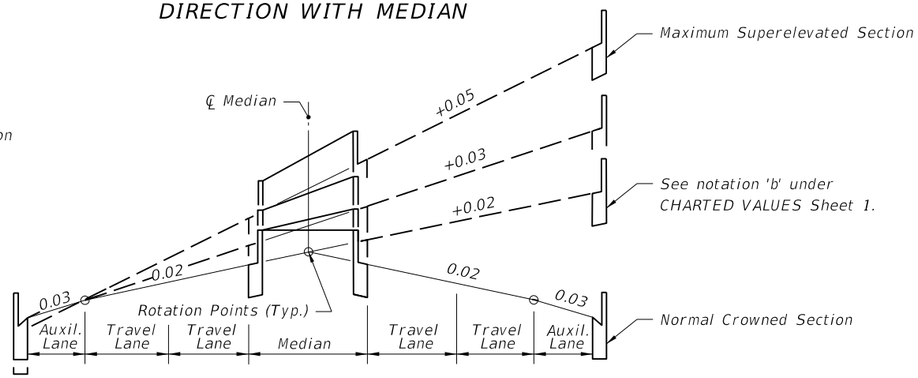

TWO TRAVEL LANES EACH DIRECTION WITH MEDIAN AND AUXILIARY LANES

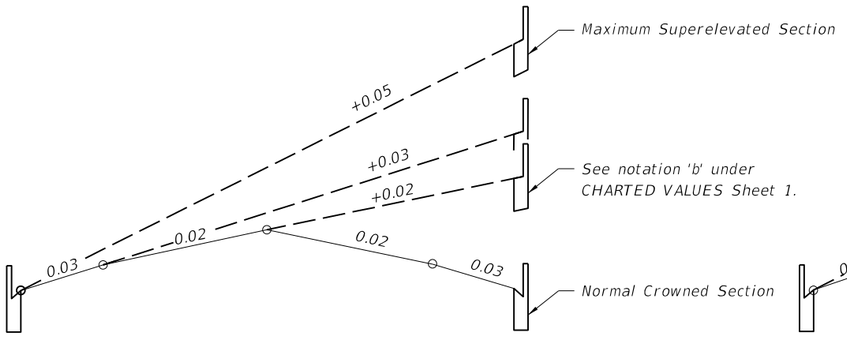

UNDIVIDED FACILITIES

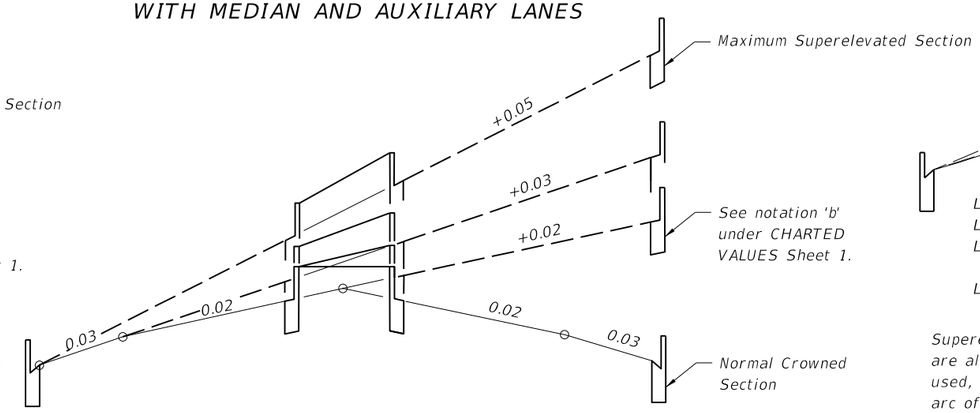

THREE TRAVEL LANES EACH DIRECTION WITH MEDIAN

DIVIDED FACILITIES

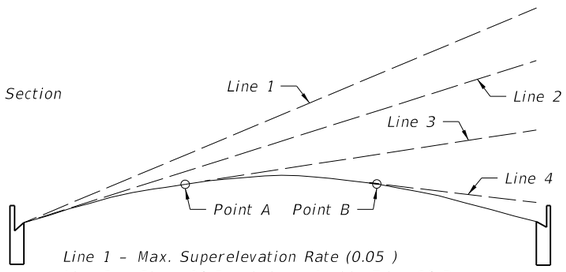

Line 1 – Max. Superelevation Rate (0.05)
Line 2 – Slope Of Parabola At Inside Edge Of Pavt.
Line 3 – Positive Superelevation Rate Less Than Max. Slope Of Parabola.
Line 4 – Adverse Superelevation.

Superelevation rates obtained from the chart or table on Sheet 1 are also applicable to a parabolic crown section. When this section is used, superelevation is established by rotating a tangent about the arc of the parabolic crown until the desired slope is attained (points A & B on sketch). The normal parabolic crown will be maintained outside the limits of the plane thus formed.

PARABOLIC SECTION

SUPERELEVATION TRANSITION SECTIONS FOR URBAN HIGHWAYS AND HIGH SPEED URBAN STREETS

LAST REVISION	REVISION	DESCRIPTION:		FDOT DESIGN STANDARDS 2013	SUPERELEVATION URBAN HIGHWAYS AND STREETS	INDEX NO.	SHEET NO.
00						511	2

C:\d\projects\standards\roadway\00500-s\00511-02.dgn
rd960rh
2:05:29 PM
6/28/2012

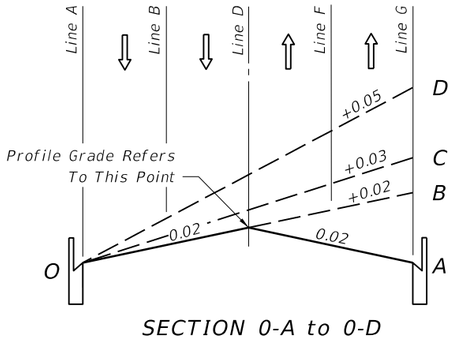

SECTION 0-A to 0-D

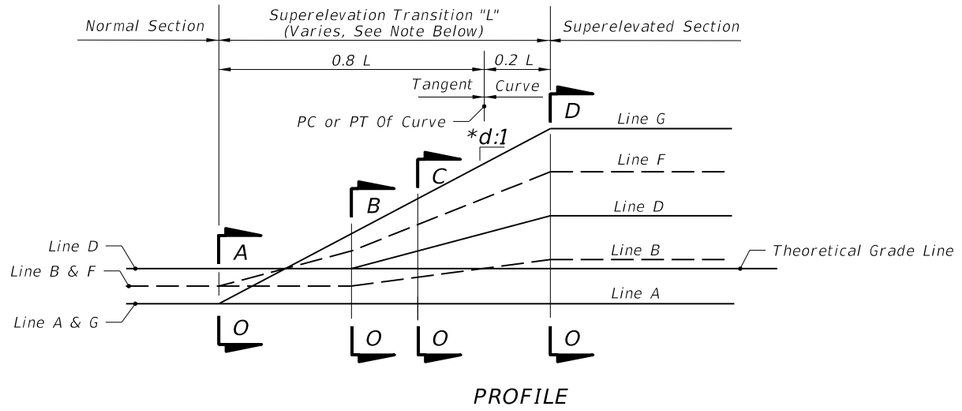

PROFILE

LINE	DESCRIPTION
A	Inside Travel Lane
B	Inside Lane Line
C	Inside Median Edge Pavement
D	℄ Construction
E	Outside Median Edge Pavement
F	Outside Lane Line
G	Outside Travel Lane
Inside And Outside Are Relative To Curve Center	

TWO LANES EACH DIRECTION

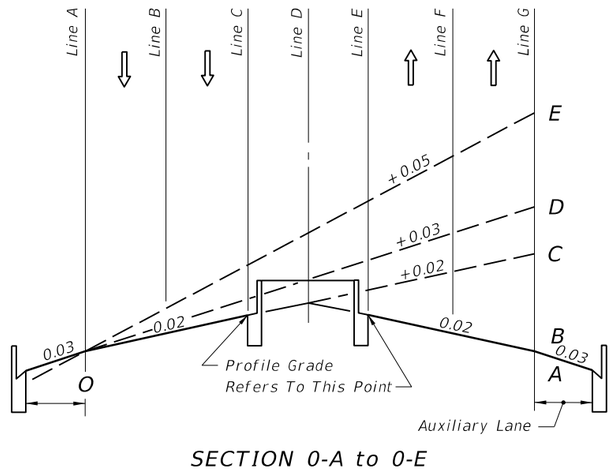

SECTION 0-A to 0-E

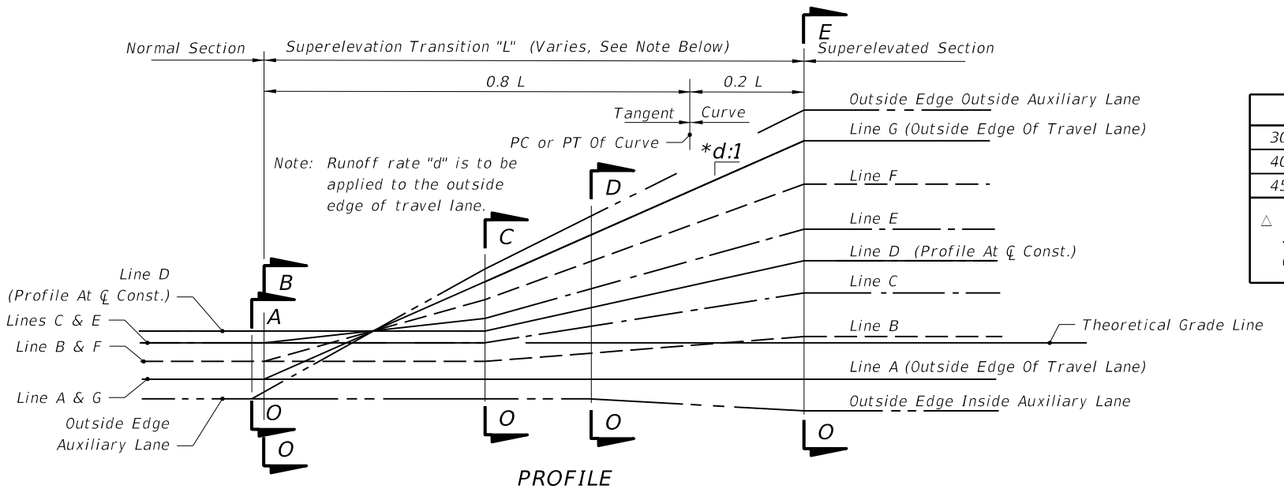

PROFILE

*d (Slope Ratio)	
30 MPH	1: 100
40 MPH	1: 125
45-50 MPH △	1: 150

△ 1: 125 May Be Used For 45 MPH Under Restricted Conditions.

TWO LANES EACH DIRECTION WITH MEDIAN AND AUXILIARY LANE

Note:
The sections and profiles shown are examples of superelevation transitions.
Similar schemes should be used for roadways having other sections.

EXAMPLE SUPERELEVATION SECTIONS AND PROFILES FOR URBAN HIGHWAYS AND HIGH SPEED URBAN STREETS

C:\d\projects\standards\roadway\00500-s\00511-03.dgn
6/28/2012 2:05:31 PM rd960rh

LAST REVISION	REVISION	DESCRIPTION:		FDOT DESIGN STANDARDS 2013	SUPERELEVATION URBAN HIGHWAYS AND STREETS	INDEX NO.	SHEET NO.
00						511	3

BASE THICKNESS AND OPTION CODES

Base Group	Structural Range	Base Group Pay Item Number	Base Options							
			Limerock LBR 100	Cemented Coquina LBR 100	Shell Rock LBR 100	Bank Run Shell LBR 100	Graded Aggregate Base LBR 100	Type B-12.5	B-12.5 And 4" Granular Subbase, Granular LBR 100 *	RAP Base
			Structural Number (Per. in.)							
			(0.18)	(0.18)	(0.18)	(0.18)	(0.15)	(0.30)	(0.30 & 0.15)	(NA)
1	0.65–0.75	701	4"	4"	4"	4"	4½"	△ 4"		□ 5"
2	0.80–0.90	702	5"	5"	5"	5"	5½"	△ 4"		
3	0.95–1.05	703	5½"	5½"	5½"	5½"	6½"	△ 4"		
4	1.05–1.15	704	6"	6"	6"	6"	7½"	△ 4"		
5	1.25–1.35	705	7"	7"	7"	7"	8½"	4½"		
6	1.35–1.50	706	8"	8"	8"	8"	9"	5"		
7	1.50–1.65	707	8½"	8½"	8½"	8½"	10"	5½"		
8	1.65–1.75	708	9½"	9½"	9½"	9½"	11"	5½"		
9	1.75–1.85	709	10"	10"	10"	10"	12"	6"	4"	
10	1.90–2.00	710	11"	11"	11"	11"	Ø 13"	6½"	4½"	
11	2.05–2.15	711	12"	12"	12"	12"	Ø 14"	7"	5"	
12	2.20–2.30	712	12½"	12½"	12½"	12½"		7½"	5½"	
13	2.35–2.45	713	Ø 13½"	Ø 13½"	Ø 13½"	Ø 13½"		8"	6"	
14	2.45–2.55	714	Ø 14"	Ø 14"	Ø 14"	Ø 14"		8½"	6½"	
15	2.60–2.70	715						9"	7"	

GENERAL NOTES

1. On new construction and reconstruction projects, when an entirely new base is to be built, the design engineer may specify the Base Group and any unrestricted General Use Optional Base shown in that base group. Note, however, that some thick granular bases are limited to widening which prevents their general use.

2. Where base options are specified in the plans, only those options may be bid and used.

3. The designer may require the use of a single base option, for instance Type B–12.5 in a high water condition. This single base option will be bid and used as Optional Base.

* For granular subbase, the construction of both the subbase and Type B–12.5 will be bid and used as Optional Base. Granular subbases include Limerock, Cemented Coquina, Shell Rock, Bank Run Shell and Graded Aggregate Base at LBR 100. The base thickness shown is Type B–12.5. All subbase thicknesses are 4" minimum.

Ø To be used for widening, three feet or less.

△ Based on minimum practical thicknesses.

□ For restrictions on the use of RAP Base – see Specifications Section 283.

GENERAL USE OPTIONAL BASE GROUPS AND STRUCTURAL NUMBERS

6/28/2012 2:05:33 PM rd960rh C:\d\projects\standards\roadway\00500-s\00514-01.dgn

LAST REVISION	REVISION	DESCRIPTION:		FDOT DESIGN STANDARDS 2013	OPTIONAL BASE GROUP AND STRUCTURAL NUMBERS	INDEX NO.	SHEET NO.
07/01/12			STATE OF FLORIDA DEPARTMENT OF TRANSPORTATION			514	1

BASE THICKNESS AND OPTION CODES

Base Group	Structural Range	Base Group Pay Item Number	Base Options						
			Limerock Stabilized LBR 70	Shell LBR 70	Shell Stabilized LBR 70	Sand-Clay LBR 75	Soil Cement (300 psi) (Plant Mixed)	Soil Cement (300 psi) (Road Mixed)	Soil Cement (500 psi) (Plant Mixed)
			Structural Number (Per. in.)						
			(0.12)	(0.12)	(0.10)	(0.12)	(0.15)	(0.15)	(0.20)
1	0.60–0.75	701	5"	5"	7"	5"	5"	5"	4"△
2	0.75–0.90	702	6½"	6½"	8½"	6½"	5½"	5½"	4"
3	0.95–1.05	703	8"	8"	9½"	8"	6½"	6½"	5"
4	1.05–1.15	704	9"	9"	10½"	9"	7½"	7½"	5½"
5	1.20–1.35	705	10"	10"	12"	10"	8½"	8½"	6"
6	1.30–1.45	706	11"	11"		11"	9"		7"
7	1.45–1.60	707	12½"	12½"		12½"	10"		7½"
8	1.65–1.75	708					11"		8½"

Not Recommended For 20 Year Design
Accumulated 18 kip Equivalent Single
Axle Loads (ESAL) Greater
Than 1,000,000

Note:
These base materials may be used on FDOT projects when approved in writing by the District Materials Engineer and shown in the plans.

△ Based on minimum practical thicknesses.

LIMITED USE OPTIONAL BASE GROUPS AND STRUCTURAL NUMBERS

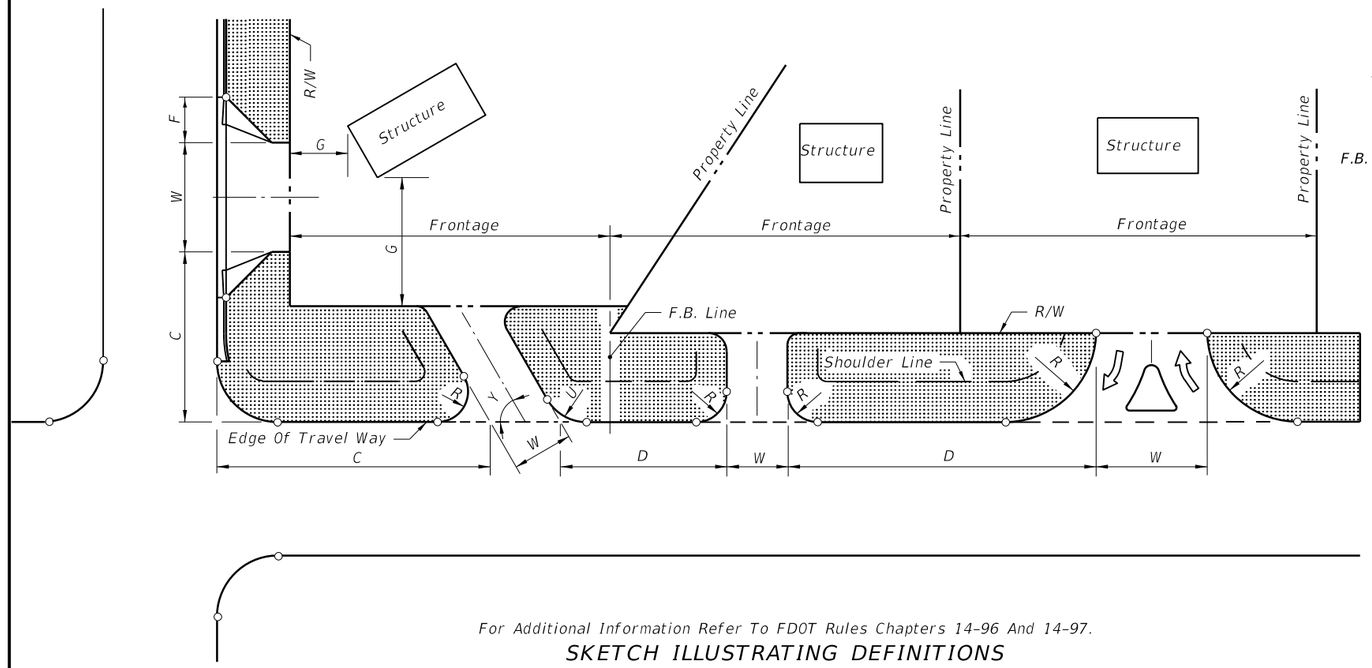

For Additional Information Refer To FDOT Rules Chapters 14-96 And 14-97.

SKETCH ILLUSTRATING DEFINITIONS

LEGEND

⊸	Return Radius Point Or Flare Point
▦	Buffer Areas
F.B. Line	Frontage Boundary Line
W	Driveway Width
Y	Driveway Angle
C	Corner Clearance
G	Setback
R	Outside Radius
U	Inside Radius
D	Distance Between Connections
F	Flare

ELEMENT DESCRIPTION	URBAN (CURB & GUTTER)			RURAL		
	1-20 Trips/Day or 1-5 Trips/Hour	21-600 Trips/Day or 6-60 Trips/Hour	601-4000 Trips/Day ◪ or 61-400 Trips/Hour	1-20 Trips/Day or 1-5 Trips/Hour	21-600 Trips/Day or 6-60 Trips/Hour	601-4000 Trips/Day ◪ or 61-400 Trips/Hour
		2-Way □	2-Way □		2-Way □	2-Way □
CONNECTION WIDTH W	12' Min. 24' Max.	24' Min. 36' Max. ☆	24' Min. 36' Max. ☆	12' Min. 24' Max.	24' Min. 36' Max. ☆	24' Min. 36' Max. ☆
FLARE (Drop Curb) F	10' Min.	10' Min.	N/A	N/A	N/A	N/A
RETURNS (Radius) R & U	N/A	△	25' Min. 50' Std. 75' Max.	15' Min. 25' Std. 50' Max.	25' Min. 50' Std. 75' Max.	25' Min. 50' Std. (Or 3-Centered Curves)
ANGLE OF DRIVE Y		60°-90°	60°-90°		60°-90°	60°-90°
DIVISIONAL ISLAND (Throat Median)		4'-22' Wide	4'-22' Wide		4'-22' Wide	4'-22' Wide
SETBACK G	12' Min., All categories. See General Note No. 5.					

◪ Street or road intersection design, with possible auxiliary lanes and channelization, may be necessary. Intersection design, with possible auxiliary lanes and channelization, should be considered for connections with more than 4000 trips/days.
□ "2-Way" refers to one "in" movement and one "out" movement i.e., not exclusive left or right turn lanes on the connection.
☆ When more than 2 lanes in the turnout connection are required, the 36' max. width may be increased to relieve interference between entering and exiting traffic which adversely affects traffic flow. These cases require documented site specific study and design.
△ Small radii may be used in lieu of flares as approved by the Department.
DESIGN NOTE: 1-Way connections will be designed to effectively eliminate unpermitted movements.

NOT INTENDED FOR FULL INTERSECTION DESIGN

SUMMARY OF GEOMETRIC REQUIREMENTS FOR TURNOUTS

GENERAL NOTES

1. For definitions and descriptions of access connection "Categories" and access "Classifications" of highway segments, and for other detailed information on access to the State Highway System, refer to FDOT Rule Chapter 14-96, "State Highway Connection Permits Administrative Process" and Rule Chapter 14-97, "State Highway System Access Management Classification System And Standards."

2. For this index the term 'turnout' applies to that portion of driveways, roads or streets adjoining the outer roadway. For this index the term 'connection' encompasses a driveway, street or road and their appurtenant islands, separators, transition tapers, auxiliary lanes, travelway flares, drainage pipes and structures, crossovers, sidewalks, curb cut ramps, signing, pavement marking, required signalization, maintenance of traffic or other means of access to or from controlled access facilities. The turnout requirements set forth in this index do not provide complete intersection design, construction or maintenance requirements.

3. The location, positioning, orientation, spacing and number of connections and median openings shall be in conformance with FDOT Rule Chapter 14-97.

4. On Department construction projects all driveways not shown on the plans are to be reconstructed at their existing location in conformance to these standards, or, in conformance to permits issued during the construction project.

5. Driveways shall have sufficient length and size for all vehicular queueing, stacking, maneuvering, standing and parking to be carried out completely beyond the right of way line. Except for vehicles stopping to enter the highway, the turnout areas and drives within the right of way shall be used only for moving vehicles entering or leaving the highway.

6. Connections with expected daily traffic over 4000 vpd are to be constructed as intersecting streets or roads. The design requirement of this index and that of the local government will be used to select appropriate connection widths, radii and intersection design, subject to the approval of the Department. For connections with expected daily traffic less than 4000 vpd, the Department will determine if drop curbs or radius returns are required in accordance with existing or planned connections. Where radius returns apply, the design requirements of this index and that of the local government will be used to select appropriate connection widths, radii and intersection design, subject to the approval of the Department.

   For connections that are intended to daily accommodate either multi-unit vehicles or single unit vehicles exceeding 30' in length, returns with 50' radii are to be used, unless otherwise called for in the plans or otherwise stipulated by permit. Where large numbers of multi-unit vehicles will use the connection, the connection width and radii are to be increased and auxiliary lanes, tapers, lane flares, separators and/or islands constructed, as determined by the Department to be necessary for safe turning movements.

7. Any connection requiring or having a specified median opening with left turn storage and served directly by that opening shall have radial returns.

8. Where a connection is intended to align with a connection across the highway, the through lanes are to align directly with the corresponding through lanes.

9. For new connections and for connections on all new construction and reconstruction projects, pavement materials and thicknesses shall meet the requirements applicable to either that detailed for "Urban Flared Turnouts", or, that described in "Table 515-1" for connections with radial returns and/or auxiliary lanes.

10. The responsibility for the cost of construction or alteration to an access connection shall be in accordance with FDOT Rule Chapter 14-96.

DESIGN NOTES

1. Prior to the adoption of FDOT Rules Chapters 14-96 and 14-97, connections to the State Highway System were defined and permitted by Classes. Connections have been redfined by Categories under Rule 14-96; and, the term "Class" has been applied to highway segments of the State Highway System as defined under Rule 14-97.

C:\d\projects\standards\roadway\00500-s\00515-01.dgn rd960rh 2:05:37 PM 6/28/2012

Footnotes:

All ½" joints shall be constructed with preformed joint filler.

* ⅛" Open joints placed at equal (20' max.) intervals for driveways over 20' wide. Joints in curb and gutter to match joints in driveways.

△ When connecting to sidestreet curb and gutter sections, the no drop curb limits should extend back to the sidestreet radius point. With or without curb and gutter, no driveway should encroach on the corner radius.

ϕ Driveways (6" concrete) shall be of a uniform width (W) to the right of way line.

(– – –) Alpha-numeric identification of a flared driveway type specifically called for in the plans, see sheets 3 and 4.

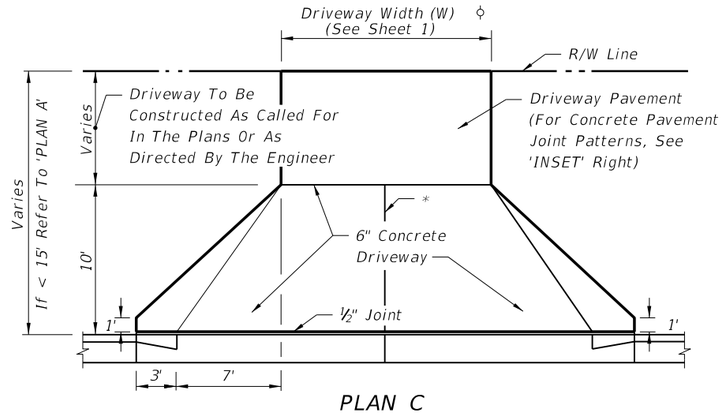

PLAN C

TURNOUT WITHOUT SIDEWALK

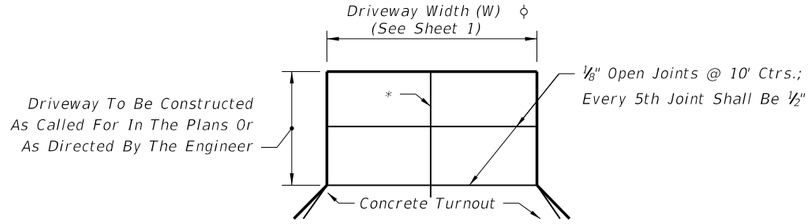

JOINT PATTERN WHEN CONCRETE DRIVE CONSTRUCTED INSET

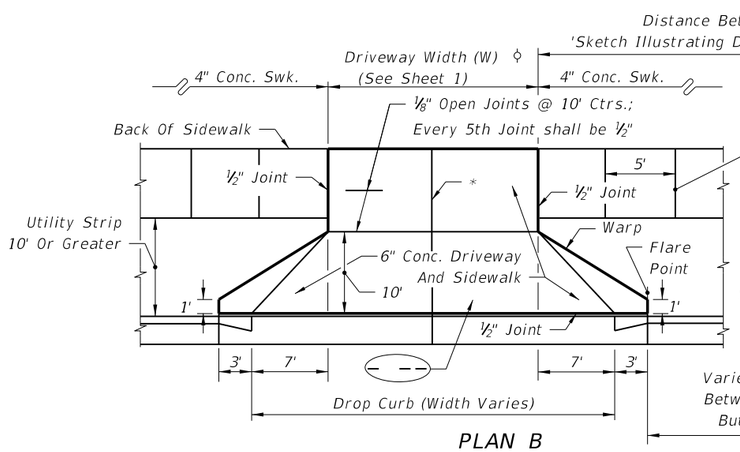

PLAN B

TURNOUT WITH SIDEWALK AND UTILITY STRIP (10' OR GREATER)

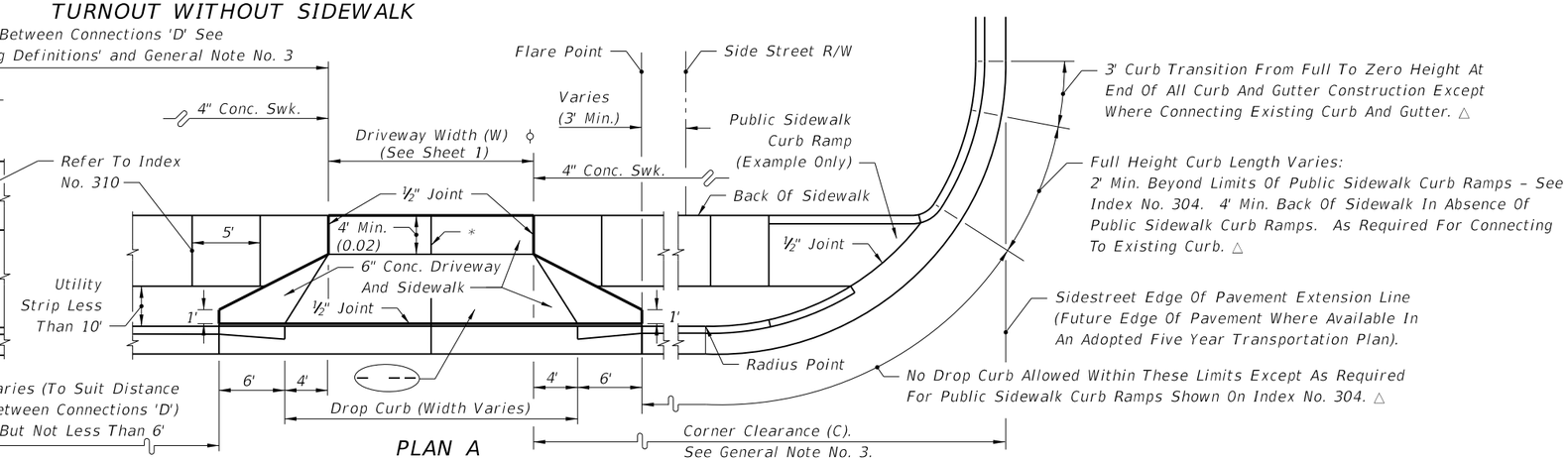

PLAN A

TURNOUT WITH SIDEWALK AND UTILITY STRIP (LESS THAN 10')

SPECIAL NOTES FOR URBAN FLARED TURNOUTS

1. Driveway 6" concrete pavement and drop curb shall meet the material and construction requirements of Sections 522 and 520 respectively of the FDOT Standard Specifications. The driveway foundation shall meet the requirement of Subarticle 522-4.
2. For details of drop curb and public sidewalk curb ramps refer to Indexes Nos. 300 and 304 respectively.
3. Where turnouts are constructed within existing curb and gutter, the existing curb and gutter shall be removed either to the nearest joint beyond the flare point or to the extent that no remaining section is less than 5' long; and, drop curb constructed in accordance with Notes Nos. 1 and 2.
4. Cost for preformed joint filler shall be included in the cost for the concrete pavement (Concrete Sidewalk, 6" Thick).
5. For turnouts with radial returns see the requirements under the "Summary Of Geometric Requirements For Turnouts", the "General Notes", the details of "Rural Turnout Construction" and the detail of "Limits Of Clearing & Grubbing, Stabilization And Base At Intersections".
6. Department maintenance of pavement shall extend out to the right of way or 2' back of sidewalk, whichever distance is less.
7. The maintenance and operation of highway lighting, traffic signals, associated equipment, and other necessary devices shall be the responsibility of a public agency.
8. All pavement markings on the State highways, including acceleration and deceleration lane markings, and signing installed for the operation of the State highway shall be maintained by the Department.
9. All signing and marking installed for the operation of the connection (such as stop bars and stop signs for the connection) shall be the responsibility of the permittee.
10. Turnouts will be paid for under the contract unit price for Concrete Sidewalk (6" Thick), SY.
11. All sidewalk surfaces crossing driveways with a cross slope shown in this Index to be 0.02 shall be 0.02 Maximum.

DESIGN NOTES FOR URBAN FLARED TURNOUTS

1. Driveways indicated as 'Adverse Applications' are those with slopes that can cause overhang drag for representative standard passenger vehicles under fully loaded conditions; or, those with slopes that can cause drivers who are leaving the roadway to slow or pause to the extent that traffic demand volumes will be impeded.

   Driveways indicated as 'Marginal Applications' are those with slopes that can cause overhang drag for representative standard passenger vehicles under fully loaded conditions when the driveway is located on the low side of fully superelevated roadways.

   Driveways indicated as 'General Applications' are those with slopes that can readily accommodate representative standard passenger vehicles and those that can accommodate representative standard trucks, vans, buses and recreational vehicles operating under normal crown and superelevation conditions.
2. The standard flared driveways on this index may not accommodate vehicles with low beds, low undercarriage or low appendage features. Where such vehicles are design vehicles, driveways are to have site specific flare designs or Category III designs.
3. When specific flare type driveways are to be constructed, the type shall be designated in the plans using the assigned alpha-numeric designation.

Note: See sheet 1 for 'GENERAL NOTES'

URBAN FLARED TURNOUTS

LAST REVISION	REVISION	DESCRIPTION:		FDOT DESIGN STANDARDS 2013	TURNOUTS	INDEX NO.	SHEET NO.
07/01/12						515	2

C:\d\projects\standards\roadway\00500-s\00515-02.dgn rd960rh 2:05:39 PM 6/28/2012

* See 'DESIGN NOTES FOR URBAN FLARED TURNOUTS' On Sheet 2.

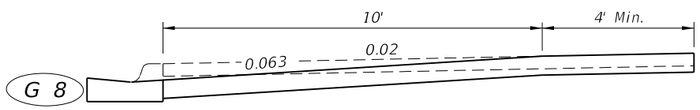

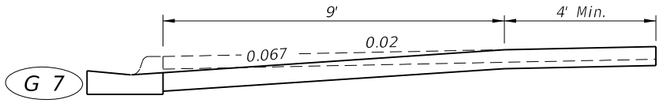

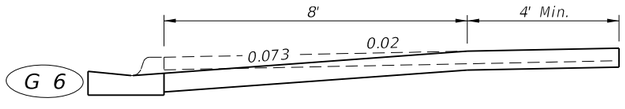

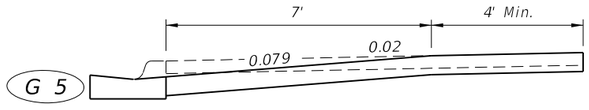

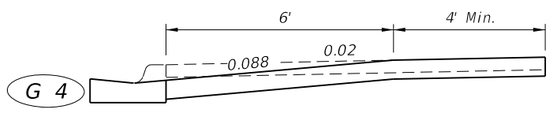

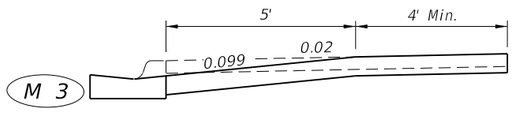

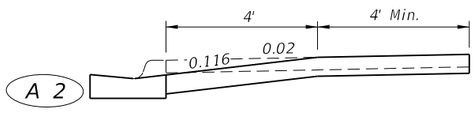

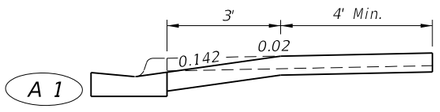

SIDEWALK ADJACENT TO CURB

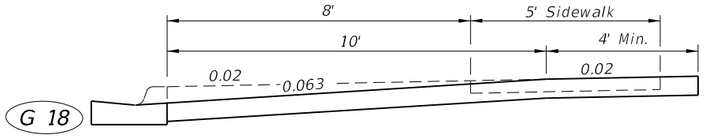

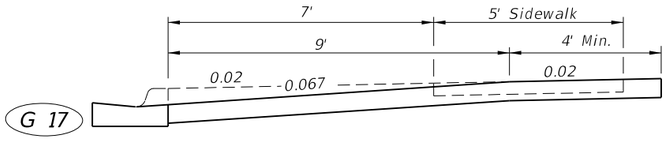

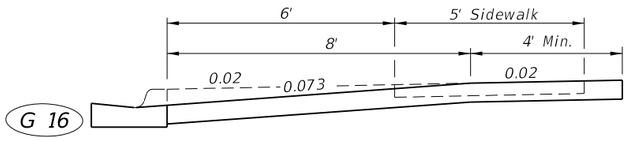

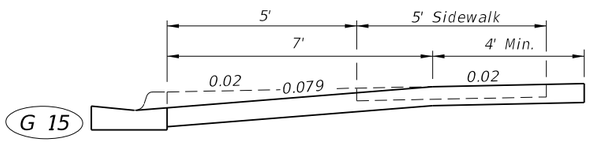

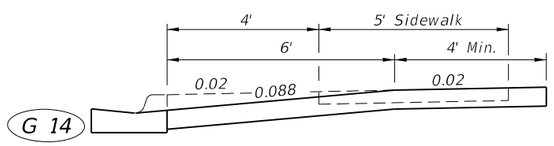

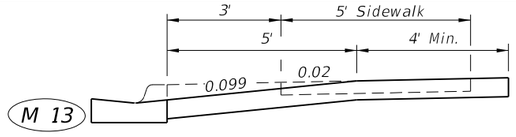

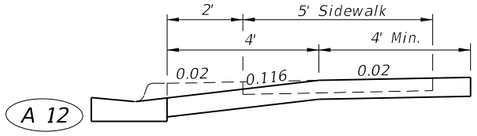

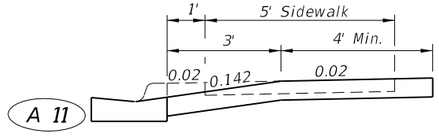

SIDEWALK WITH UTILITY STRIP ON 0.02 SLOPE

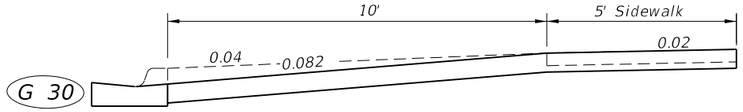

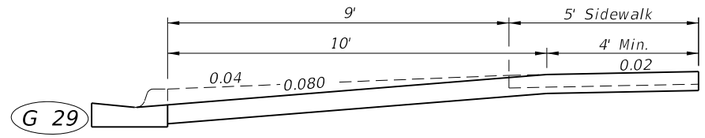

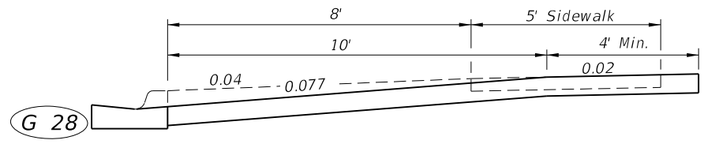

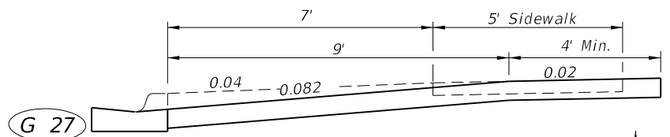

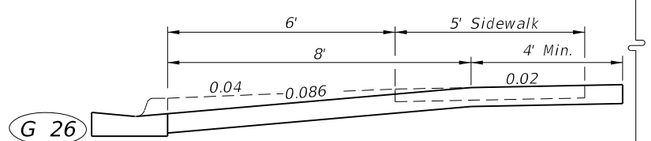

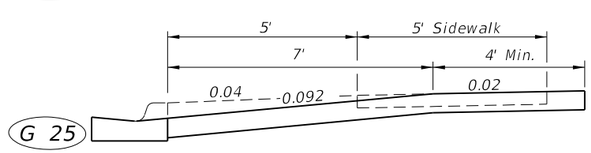

GENERAL*
APPLICATIONS

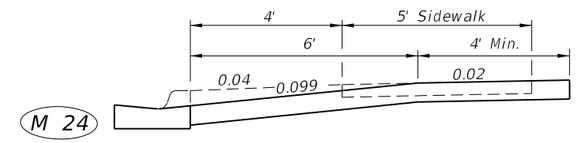

MARGINAL*
APPLICATIONS ON LOW SIDE OF FULLY SUPERELEVATED ROADWAY (REFER TO MODIFICATIONS ON SHEET 4)

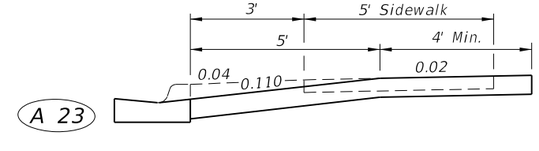

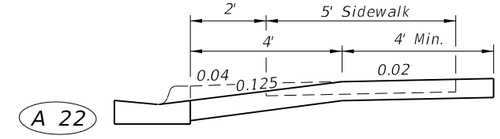

ADVERSE*
APPLICATIONS (REFER TO MODIFICATIONS ON SHEET 4)

SIDEWALK WITH UTILITY STRIP ON 0.04 SLOPE

DRIVEWAY SECTIONS ON CURBED FACILITIES WITH SIDEWALKS

LAST REVISION	REVISION	DESCRIPTION:			INDEX NO.	SHEET NO.
07/01/12			FDOT DESIGN STANDARDS 2013	TURNOUTS	515	3

C:\d\projects\standards\roadway\00500-s\00515-03.dgn rd960rh 2:05:42 PM 6/28/2012

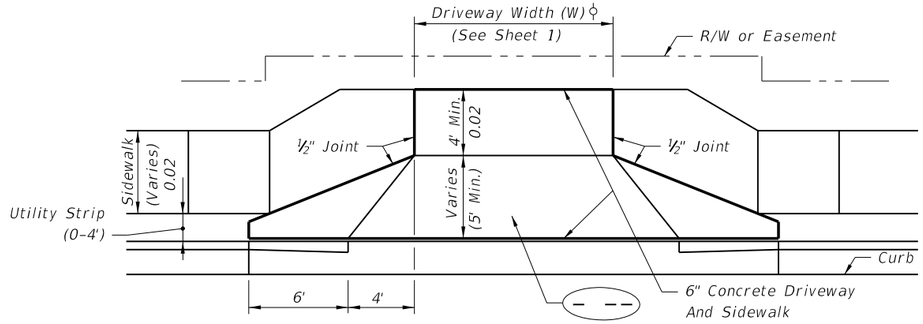

PLAN

MODIFICATIONS OF 'ADVERSE' AND 'MARGINAL' APPLICATIONS

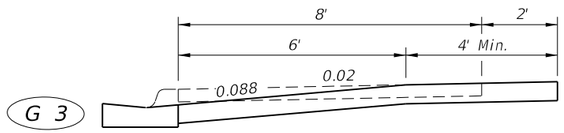

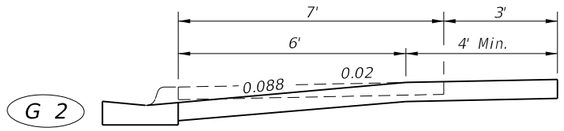

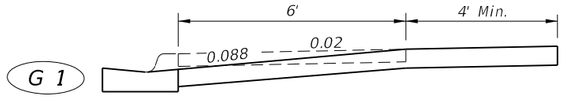

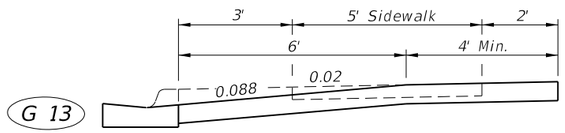

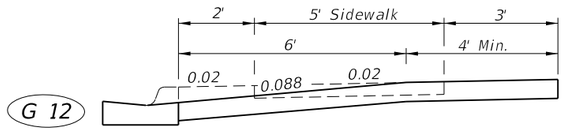

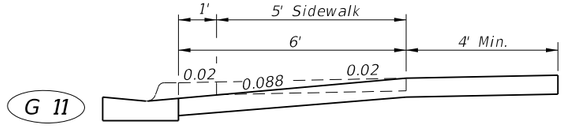

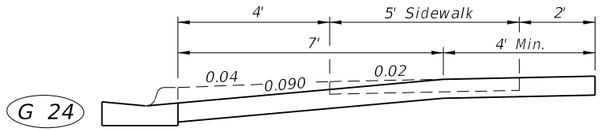

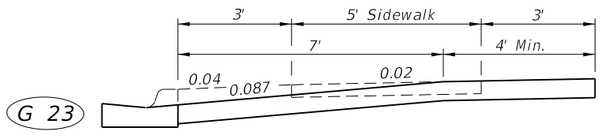

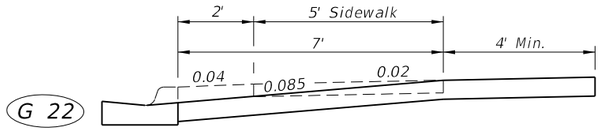

ADVERSE* AND MARGINAL* SECTIONS MODIFIED TO ACHIEVE GENERAL* APPLICATION

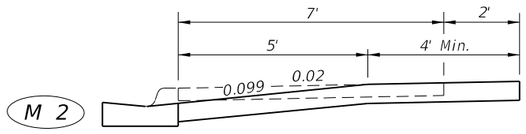

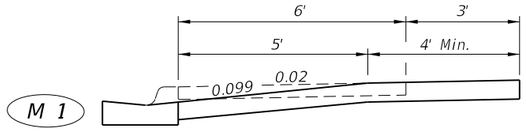

SIDEWALK ADJACENT TO CURB

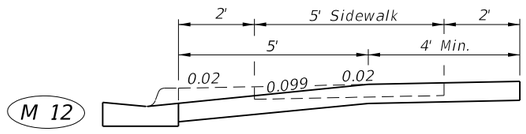

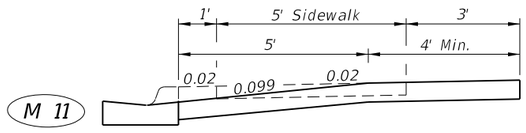

SIDEWALK WITH UTILITY STRIP ON 0.02 SLOPE

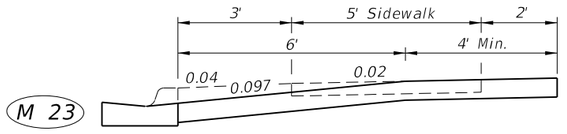

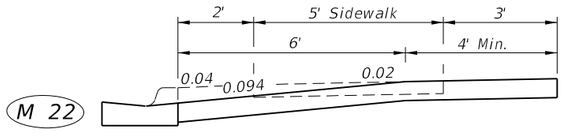

ADVERSE* SECTIONS MODIFIED TO ACHIEVE MARGINAL* APPLICATION

SIDEWALK WITH UTILITY STRIP ON 0.04 SLOPE

* See 'DESIGN NOTES FOR URBAN FLARED TURNOUTS' On Sheet 2.

MODIFICATIONS TO ADVERSE AND MARGINAL SECTIONS

LAST REVISION	REVISION	DESCRIPTION:		FDOT DESIGN STANDARDS 2013	TURNOUTS	INDEX NO.	SHEET NO.
07/01/12						515	4

C:\d\projects\standards\roadway\00500-s\00515-04.dgn
rd960rh
2:05:44 PM
6/28/2012

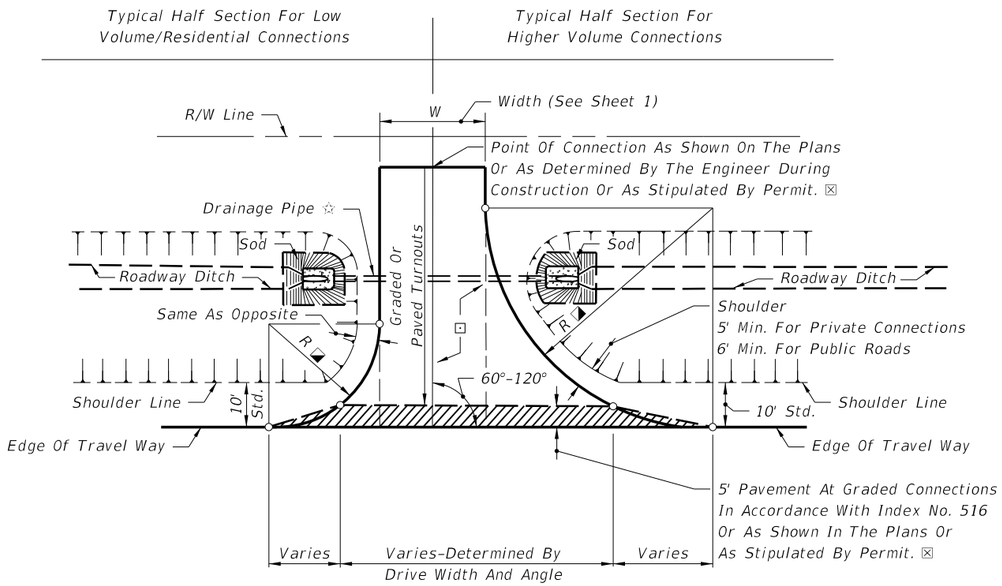

PLAN

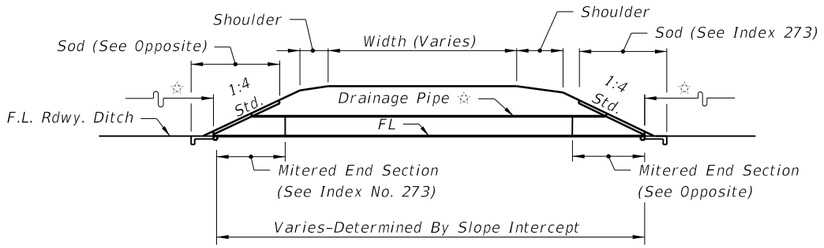

DRAINAGE SECTION

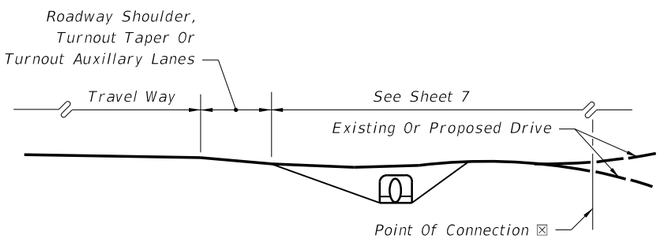

TURNOUT PROFILE AND END VIEW

RURAL TURNOUT CONSTRUCTION

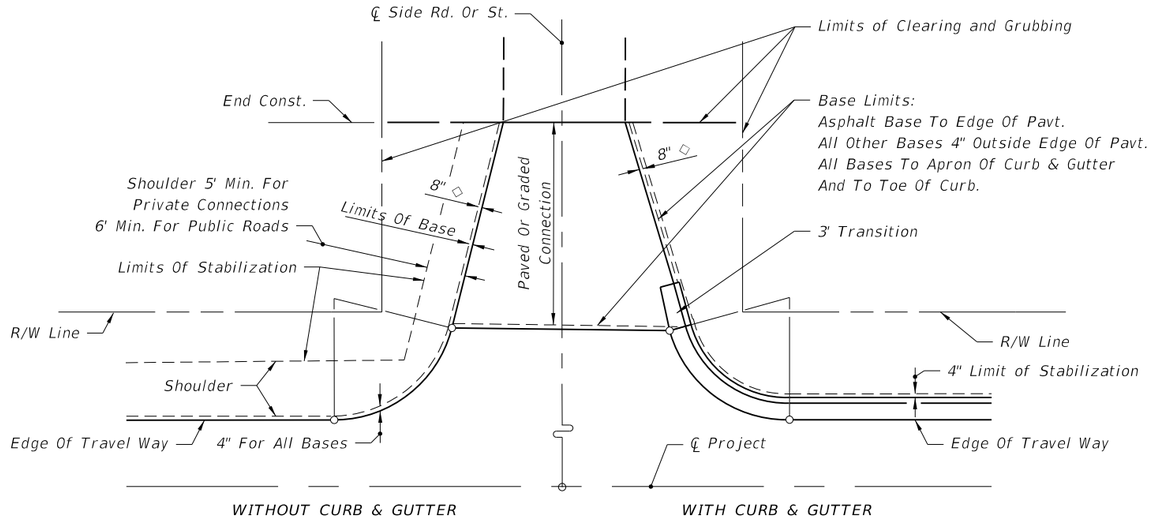

PLAN

LIMITS OF CLEARING & GRUBBING, STABILIZING AND BASE AT INTERSECTIONS

INTERSECTIONS NOTES:

○ Return Radius Point or Transition Point.

◇ 8" Or Match Exist. Stabilization Limits (8" Min.).

DRIVE ENTRANCES NOTES:

☆ Drainage pipe size and length shall be that shown on the plans, or as stipulated by permit, or, as determined by the Engineer during construction. The size shall be at least that established by the FDOT District, but not less than 15" diameter or equivalent. For minimum cover over drainage pipe see Index No. 205. Pipe arch or elliptical pipe may be required to obtain necessary cover. At minimal cover applications a modified pavement apron is permitted. See 'PERMISSIBLE PAVEMENT MODIFICATION' Index No. 273. For spacing between adjacent pipe end treatments see Index No. 273.

⊡ Stable material may be required for graded turnouts to private property as directed by the Engineer in accordance with Section 102-8 of the Standard Specifications.

☒ The 5' pavement at graded connections is not required where there is paved shoulder 4' or more in width. The 5' pavement requirement may be waived for connections serving one or two homes or field entrances with less than 20 trips per day, or 5 trips per hour as approved by permit or by the Engineer, or when not itemized in the plans.

Paved turnouts are to be constructed for all paved connecting facilities. The connecting point will be determined by the Engineer.

Paved turnouts are to be constructed for all business, commercial, industrial or high volume residential graded connecting facilities. The connecting point shall be 30' from edge of travel way or at R/W line, whichever is less.

Paved turnouts are to be constructed for all connecting facilities over 4000 vehicles per day. The connecting point shall be at the R/W line.

◪ See "Summary Of Geometric Requirements For Turnouts" chart for return radii lengths and supplemental information.

○ Return Radius Point or Flare Point.

C:\d\projects\standards\roadway\00500-s\00515-05.dgn
rd960rh
2:05:46 PM
6/28/2012

LAST REVISION	REVISION	DESCRIPTION:		FDOT DESIGN STANDARDS 2013	TURNOUTS	INDEX NO.	SHEET NO.
07/01/12						515	5

MATERIAL TYPES AND THICKNESSES IN DRIVING AREAS FOR RURAL AND URBAN CONNECTIONS

Course	Materials ②	Thickness (in.) ①	
		Connections ③	Roadway ④
Structural	Asphaltic Concrete	1"	1½"
Bases	Optional Base (See Index No. 514)	O.B.G. 1	O.B.G. 3

① Minimum thickness.
② All materials shall be approved by the Department prior to being placed.
③ Connection structure other than traffic lanes. See Notes 1 and 2 below.
④ Travel way flares (bypass lanes), auxiliary lanes serving more than a single connection, and all median crossovers including their auxiliary lanes and/or transition tapers. See Notes 1 and 2 below.

NOTES

1. The pavement should be structurally adequate to meet the expected traffic loads and should not be less than that shown above, except as approved by the Department for graded connections. Other Department approved equivalent pavements may be used at the discretion of the Engineer. For additional information see Index No. 514.

2. Auxiliary lanes and their transition tapers shall be the same structure as the abutting travel way pavement thickness or any of the roadway structures tabulated above, whichever is thicker.

3. If an asphalt base course is used for a turnout, its thickness may be increased to match the edge of travel way pavement thickness in lieu of a separate structural course. 6" of Portland cement concrete will be acceptable in lieu of the asphalt base and structural courses. See Notes 4 and 5 below.

4. A structural course is required for flexible pavements when they are used for auxiliary lanes serving more than a single connection.

5. Connections paved with Portland cement concrete shall be Class NS concrete at least 6" thick. The Department may require greater thickness when called for in the plans or stipulated by permit. Materials and construction are to conform with FDOT Standard Specifications Sections 347, 350 and 522.

6. The Department may require other pavement criteria where local conditions warrant.

PAVEMENT STRUCTURE FOR TURNOUTS AND AUXILIARY LANES TABLE 515-1

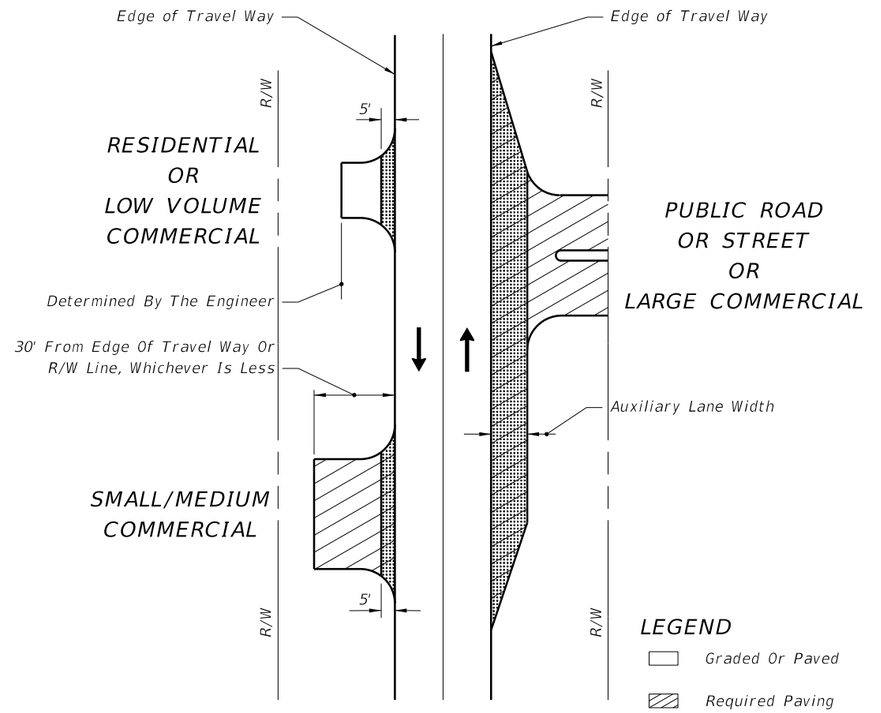

NOTES

1. Auxiliary lane pavements and crossover pavements shall be maintained by the Department.

2. Department maintenance of turnout pavement shall extend out to 5' from edge of the travel way or limits of paved shoulders, and, extend to include auxiliary lanes. The remainder of any turnout paved area on the right of way shall be maintained by the owner or his authorized agent. As a function of routinely reworking shoulders, the Department may grade and shape existing material on nonpaved areas beyond the maintained pavement.

3. Control and maintenance of drainage facilities within the right of way shall be solely the responsibility of the Department, unless specified differently by Department permit.

4. The maintenance and operation of highway lighting, traffic signals, associated equipment, and other necessary devices shall be the responsibility of a public agency.

5. All pavement markings on the State highways, including acceleration and deceleration lane markings, and signing installed for the operation of the State highway shall be maintained by the Department.

6. All signing and marking installed for the operation of the connection (such as stop bars and stop signs for the connection) shall be the responsibility of the permittee.

LIMITS OF CONSTRUCTION AND MAINTENANCE FOR RURAL CONNECTIONS

C:\d\projects\standards\roadway\00500-s\00515-06.dgn
rd960rh
2:05:48 PM
6/28/2012

LAST REVISION	REVISION	DESCRIPTION:		FDOT DESIGN STANDARDS 2013	TURNOUTS	INDEX NO.	SHEET NO.
07/01/12						515	6

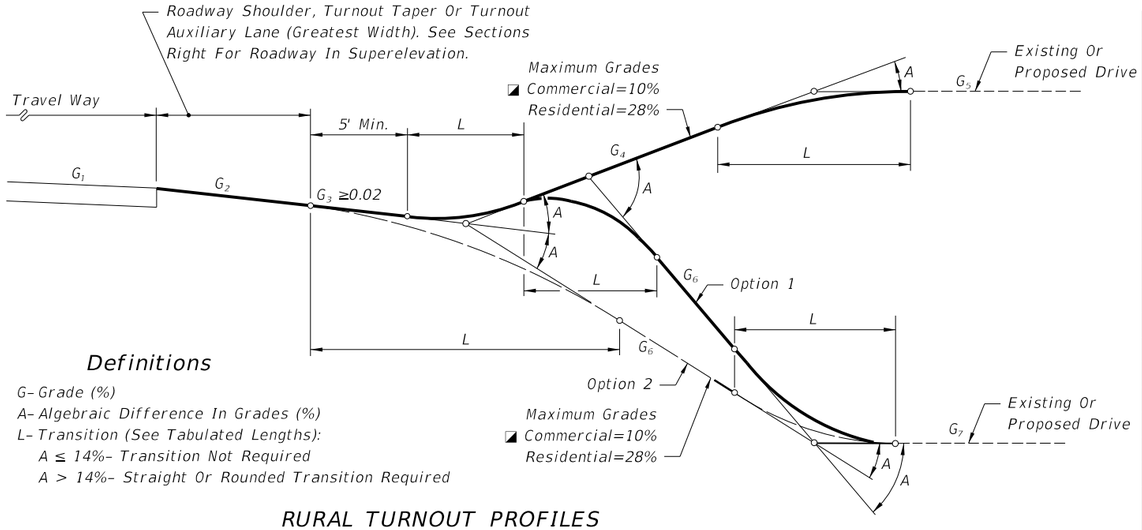

Definitions

G– Grade (%)
A– Algebraic Difference In Grades (%)
L– Transition (See Tabulated Lengths):
A ≤ 14%– Transition Not Required
A > 14%– Straight Or Rounded Transition Required

RURAL TURNOUT PROFILES

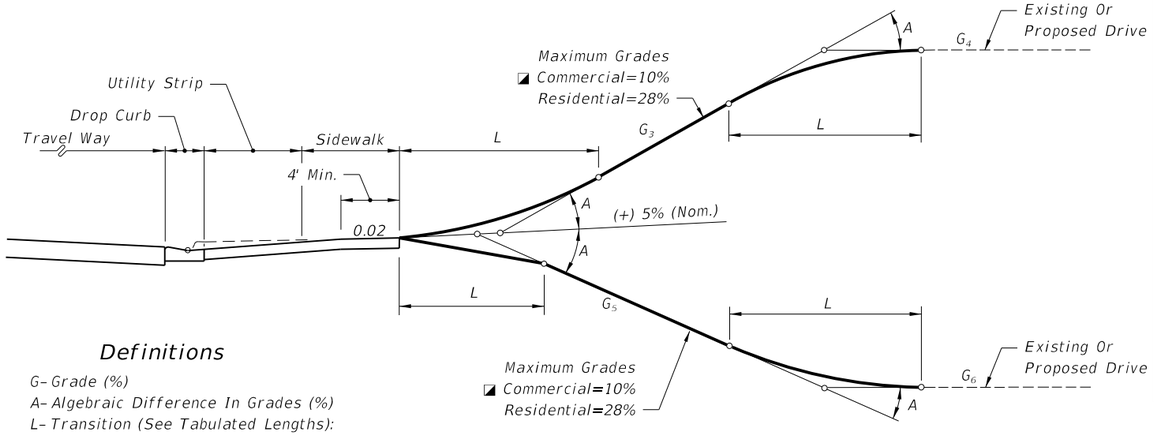

Definitions

G– Grade (%)
A– Algebraic Difference In Grades (%)
L– Transition (See Tabulated Lengths):
A ≤ 14%– Transition Not Required
A > 14%– Straight Or Rounded Transition Required

URBAN TURNOUT PROFILES

◪ When restoring or reconstructing existing commercial turnout connections on new construction and reconstruction projects, the maximum 10% commercial grade may be exceeded provided this does not create adverse roadway operational or safety impacts. This shall be approved by the District Design Engineer and supported by documented site specific findings.

A	LENGTHS (L) (FT.)							
	CRESTS				SAGS			
	STRAIGHT		ROUNDED		STRAIGHT		ROUNDED	
	Desirable	Minimum	Desirable	Minimum	Desirable	Minimum	Desirable	Minimum
6–13%	3	0	5	0	3	0	5	0
14%	3	0	10	0	3	0	10	0
15%	3	2.5	10	3	5	3	10	5
16%	5	3	10	4	6	4	10	6
17%	6	3.5	10	5	8	5	10	7
18%	6	4	10	6	9	6	10	8
19%	7	4.5	10	7	11	7	12	9
20%	8	5	11	8	12	8	13	10
21%	9	5.5	12	9	13	8.5	14	11
22%	10	6	13	10	14	9	16	12
23%	10	6.5	14	10.5	14	9.5	16	12.5
24%	11	7	15	11	15	10	17	13
25%	12	7.5	15	11.5	16	10.5	18	13.5
26%	12	8	16	12	17	11	18	14
27%	13	8.5	17	12.5	17	11.5	19	14.5
28%	14	9	17	13	18	12	20	15
29%	NA	NA	22	14	NA	NA	21	17
30–31%	NA	NA	23	15	NA	NA	22	18
32–33%	NA	NA	24	16	NA	NA	23	20
34–36%	NA	NA	26	17	NA	NA	25	21
37–38%	NA	NA	27	18	NA	NA	26	22
39–41%	NA	NA	29	19	NA	NA	28	24
42–43%	NA	NA	30	20	NA	NA	29	25
44–46%	NA	NA	32	21	NA	NA	31	26
47–48%	NA	NA	33	22	NA	NA	32	27
49–51%	NA	NA	34	23	NA	NA	34	28
52–54%	NA	NA	36	24	NA	NA	35	30
55–56%	NA	NA	37	25	NA	NA	36	31

Rounded: Either circular, parabolic, or spline curvature. The plans or the Engineer may specify a particular type of curvature.

Desirable: Desirable minimum lengths {Greater lengths than minimum and desirable are recommended where practical for flatter and smoother profile.}
Minimum: Absolute minimum lengths

RECOMMENDED TURNOUT PROFILE TRANSITION LENGTHS (L) (FT.)

STORMWATER RUNOFF AND PROFILE OPTION NOTES

1. Turnouts shall neither cause water to flow on or across the roadway pavement, nor cause water ponding or erosion within the State right of way. On all rural turnouts the transition (L) nearest the roadway shall be sloped or crowned to direct stormwater runoff to the roadside ditch. Inlets, flumes or other appropriate runoff control devices shall be constructed when runoff volumes are sufficient to cause erosion of the shoulder. Similar runoff control devices shall be constructed as necessary to properly direct and control the stormwater runoff on urban turnouts.

2. The Option 1 profile is intended for locations where roadway, turnout taper and auxiliary lane stormwater runoff volumes are relatively large. The Option 2 profile is intended for locations where runoff volumes are relatively small and/or where there is no roadside ditch.

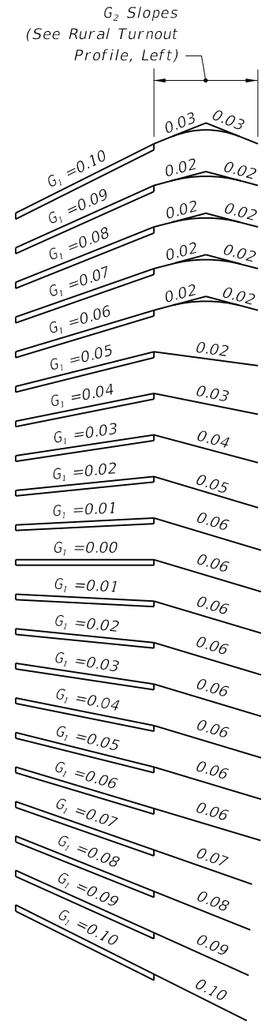

ROADWAY PAVEMENT SLOPES AND SLOPES OF ABUTTING RURAL TURNOUT SURFACES (G_2)

SUPERELEVATION SECTIONS

TURNOUT PROFILES

6/28/2012 2:05:50 PM rd960rh C:\d\projects\standards\roadway\00500-s\00515-07.dgn

LAST REVISION	REVISION	DESCRIPTION:			INDEX NO.	SHEET NO.
07/01/12			FDOT DESIGN STANDARDS 2013	TURNOUTS	515	7

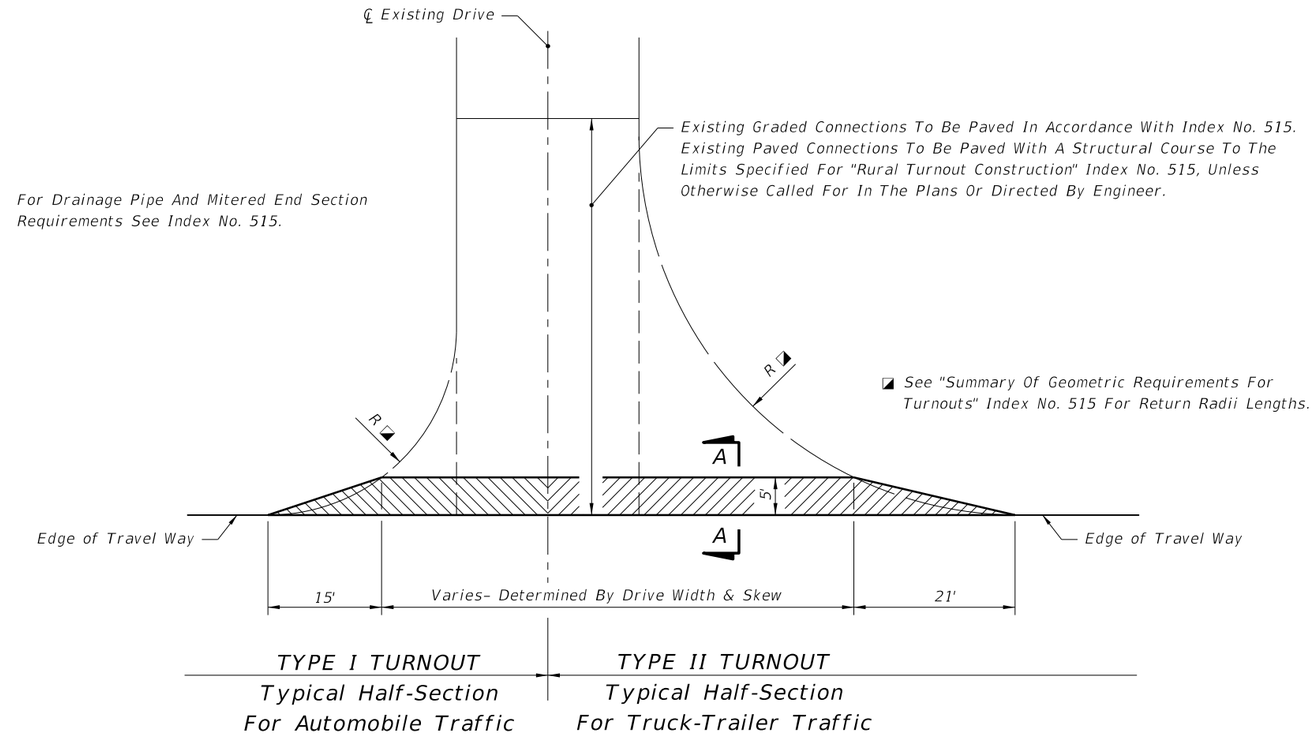

TYPE I TURNOUT
Typical Half-Section
For Automobile Traffic

TYPE II TURNOUT
Typical Half-Section
For Truck-Trailer Traffic

TURNOUT CONSTRUCTION

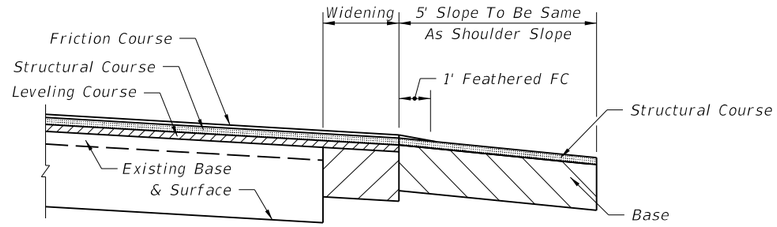

SECTION AA WITH WIDENING

TURNOUT CONSTRUCTION

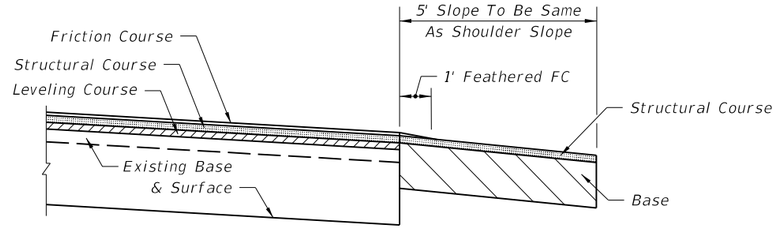

SECTION AA

RESURFACING EXISTING TURNOUT

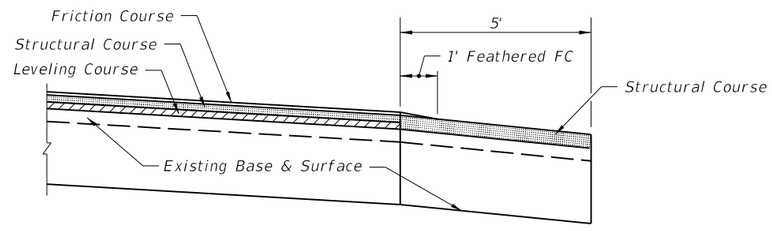

SECTION AA

AREAS FOR ONE 5' DEEP TURNOUT (SY)

Drive Width (Ft.)	Intersection			
	Normal		Skewed	
	Type I	Type II	Type I	Type II
12	26	51	31	60
14	27	52	33	61
16	28	53	34	63
18	29	54	35	64
20	31	55	37	65
22	32	56	38	67
24	33	57	39	68
26	34	58	40	69
28	35	59	42	70
30	36	61	43	72
32	37	62	44	73
34	38	63	46	74
36	39	64	47	76
38	41	65	48	77
40	42	66	49	78
42	43	67	51	79
44	44	68	52	81
46	45	69	53	82
48	46	71	55	83
50	47	72	56	85
52	48	73	57	86
54	49	74	58	87
56	51	75	60	88
58	52	76	61	90
60	53	77	62	91

PAVEMENT STRUCTURE FOR 5' DEEP TURNOUTS

Course	Material	Minimum Thickness
Structural	Asphaltic Concrete	1"
Base	Optional Base (See Index No. 514)	O.B.G. 1

Notes:

1. Turnout structural course to be the same material as roadway leveling or structure course. Structural course not required if asphalt base course and its thickness increased to match edge of roadway pavement.
2. Any Department approved pavement structure equivalence may be used at the discretion of the Engineer.
3. Additional structural strength may be required if heavy truck loads are anticipated.

GENERAL NOTES

1. Turnouts are to be constructed or resurfaced for low volume (single family, duplex, farm, etc.) residential connections as directed by the Engineer.
2. Turnout construction is not required for low volume residential connections where roadway shoulders are paved.
3. Connections outside the 5' limit are to be constructed as directed by the Engineer.
4. The contract unit price for Turnout Construction includes the cost for excavation and base.
5. Payment for structural course is to be included in roadway resurfacing pay item.
6. Payment for feathering friction course is to be included in the unit price for Asphaltic Concrete Friction Course placed on the roadway. Feathered areas will not be included in measured quantities. Feathering is not required for FC-5 friction course.

C:\d\projects\standards\roadway\00500-s\00516-01.dgn
rd960rh
2:05:52 PM
6/28/2012

LAST REVISION	REVISION	DESCRIPTION:	FDOT DESIGN STANDARDS 2013	TURNOUTS RESURFACING PROJECTS	INDEX NO.	SHEET NO.
07/01/12					516	1

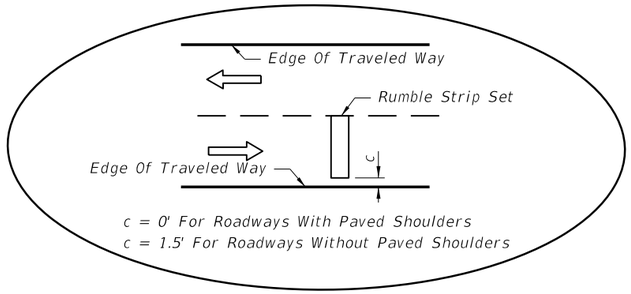

INSET A

Note: Rumble strips may be required for one or more legs of the intersection (one leg shown for spacing information). Rumble strips shall be constructed only on the legs identified in the plans. See General Note No. 1.

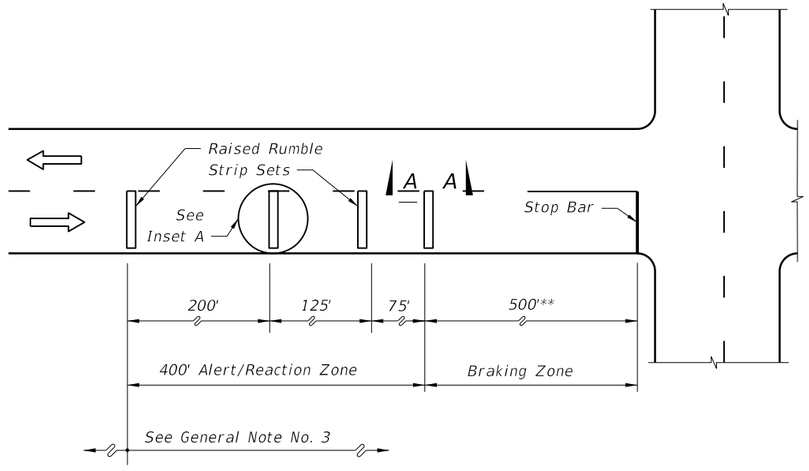

** May be decreased in urban areas with low operating speeds.

PLAN

GENERAL NOTES FOR RAISED RUMBLE STRIPS

1. Raised rumble strips shall be constructed on all paved shoulders approaching structures, where the structure shoulder width is less than the usable shoulder width of the approach roadway. Raised rumble strips at intersections shall be constructed only when specified in the plans.

   See Index 17359 for rumble strip placement on approaches to narrow bridges.

2. Raised rumble strips are to be constructed in accordance with Section 546 of the Specifications.

3. When any portion of a curve falls within the limit of rumble strips shown in these details, additional rumble strip sets spaced at 200' centers shall be constructed throughout the remainder of the approaching curve.

4. Raised rumble strips shall be paid for per set under the contract unit price for Rumble Strips Sets, PS. Such price and payment shall be full compensation for all work and materials required without adjustment due to width of pavement receiving the strips or length of strips.

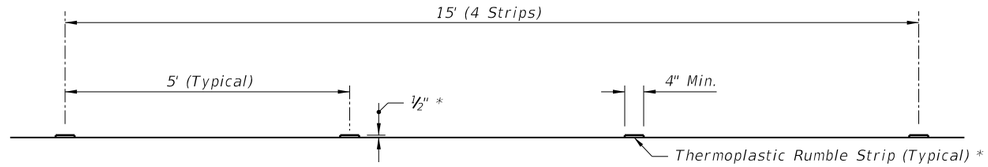

* Use multiple applications to achieve desired ½" thickness

Note: Shoulder thermoplastic rumble strip sets shall match edgeline color. Intersection thermoplastic rumble strip sets shall be white.

THERMOPLASTIC SET

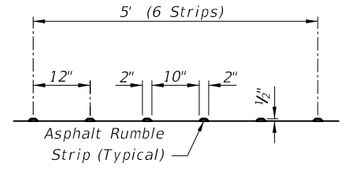

ASPHALT SET

SECTION AA * FOR THERMOPLASTIC AND ASPHALT RUMBLE STRIP SETS

RAISED RUMBLE STRIPS AT INTERSECTIONS

6/28/2012 2:05:55 PM rd960rh C:\d\projects\standards\roadway\00500-s\00518-01.dgn

LAST REVISION	REVISION	DESCRIPTION:		FDOT DESIGN STANDARDS 2013	RUMBLE STRIPS	INDEX NO.	SHEET NO.
07/01/09			STATE OF FLORIDA DEPARTMENT OF TRANSPORTATION			518	1

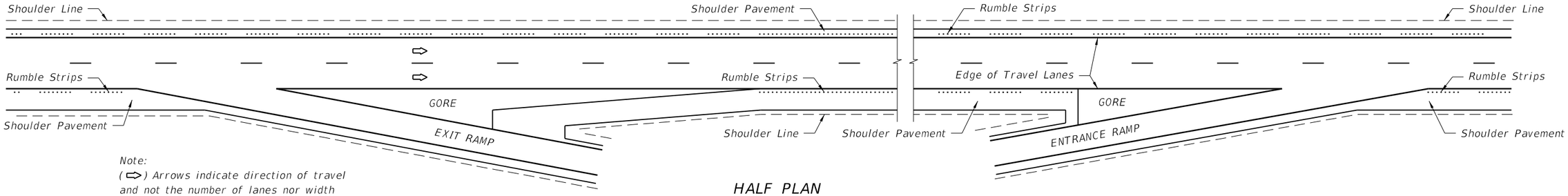

Note:
(⇨) Arrows indicate direction of travel and not the number of lanes nor width of median shoulder pavement.

HALF PLAN
LIMITED ACCESS FACILITIES

SHOULDER GROUND-IN RUMBLE STRIP PLACEMENT

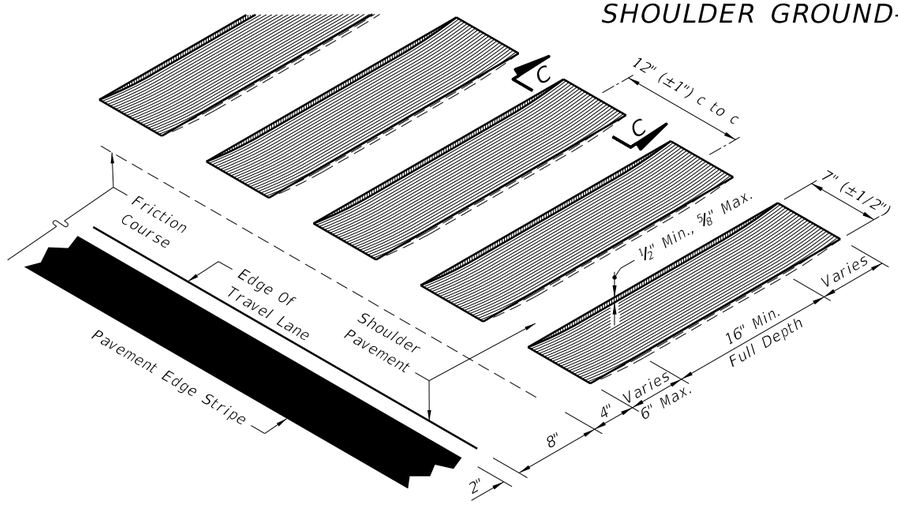

ISOMETRIC - TRANSVERSE CUT

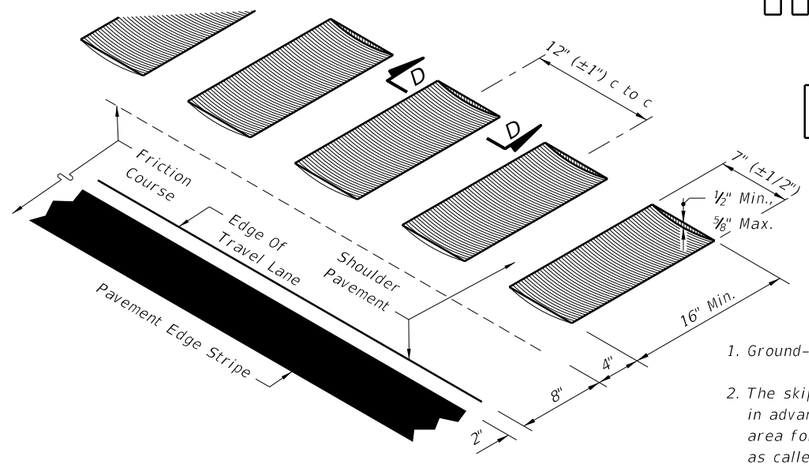

ISOMETRIC - LONGITUDINAL CUT

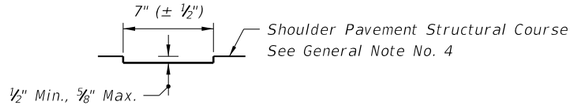

SECTION CC
TRANSVERSE CUT

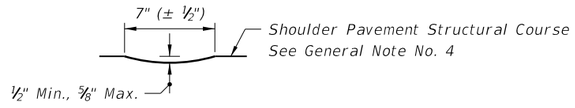

SECTION DD
LONGITUDINAL CUT

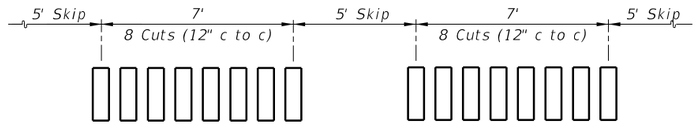

SKIP ARRAY

CONTINUOUS ARRAY

ARRAYS

GENERAL NOTES FOR SHOULDER GROUND-IN RUMBLE STRIPS

1. Ground-in rumble strips shall be constructed on limited access facilities.
2. The skip array is the standard array. The continuous array shall be constructed in advance of bridge ends for a distance of 1000', or back to the gore recovery area for mainline interchange bridges; and constructed at other specific locations as called for in the plans.
3. Ground-in rumble strips are to be constructed in accordance with Section 546 of the Specifications.
4. When friction course extends more than 8" beyond the edge of the travel lane, the extended friction course shall be bladed off back to the 8" line, prior to rumble strip grinding.
5. Both arrays shall be paid for under the contract unit price for Rumble Strips (Ground-In), PM. Such price and payment shall be full compensation for all work and materials required.

DESIGN NOTE

1. The rumble strips described on this sheet are intended for use on flexible pavement shoulders. When constructing ground-in rumble strips on existing rigid (concrete) shoulders, no rumble strips shall be located closer than 6" from any pavement joint. When specifying ground-in rumble strips on existing rigid shoulders their location and array shall be detailed in the plans.
2. Other methods and types of applications shall not be used unless approved in writing by the State Roadway Design Engineer. Approval will be considered only with sufficient documented justification for deviation from this standard.

LOCATION ALONG SHOULDER (FLEXIBLE PAVEMENT)

SHOULDER GROUND-IN RUMBLE STRIPS

C:\d\projects\standards\roadway\00500-s\00518-02.dgn
rd960rh
2:05:57 PM
6/28/2012

LAST REVISION	REVISION	DESCRIPTION:			INDEX NO.	SHEET NO.
07/01/07			FDOT DESIGN STANDARDS 2013	RUMBLE STRIPS	518	2

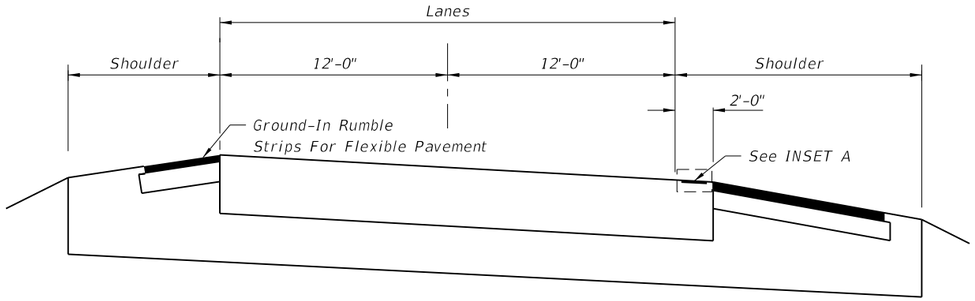

NTS

RIGID PAVEMENT WITH FLEXIBLE PAVEMENT SHOULDER

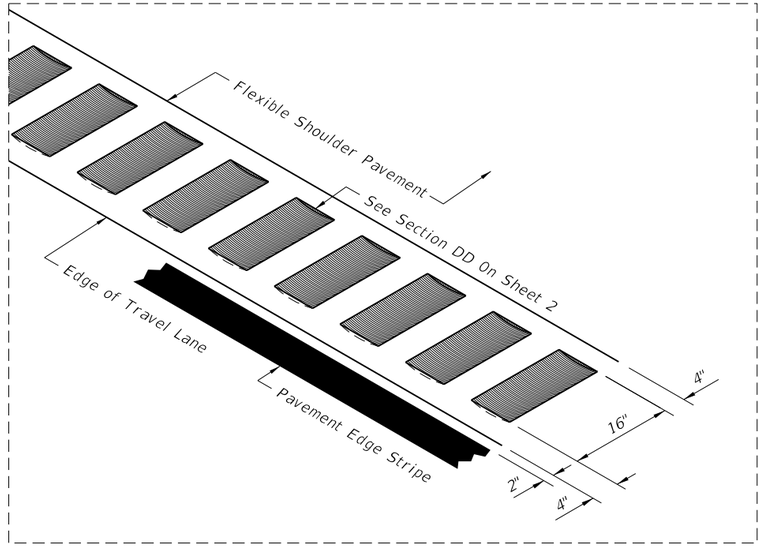

ISOMETRIC - LONGITUDINAL CUT
INSET A

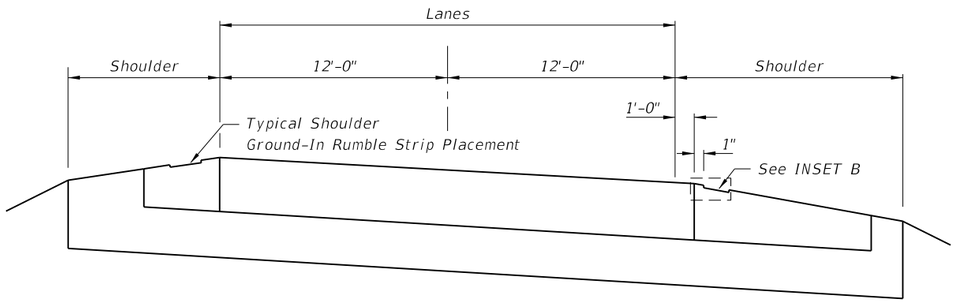

NTS

RIGID PAVEMENT WITH RIGID PAVEMENT SHOULDER

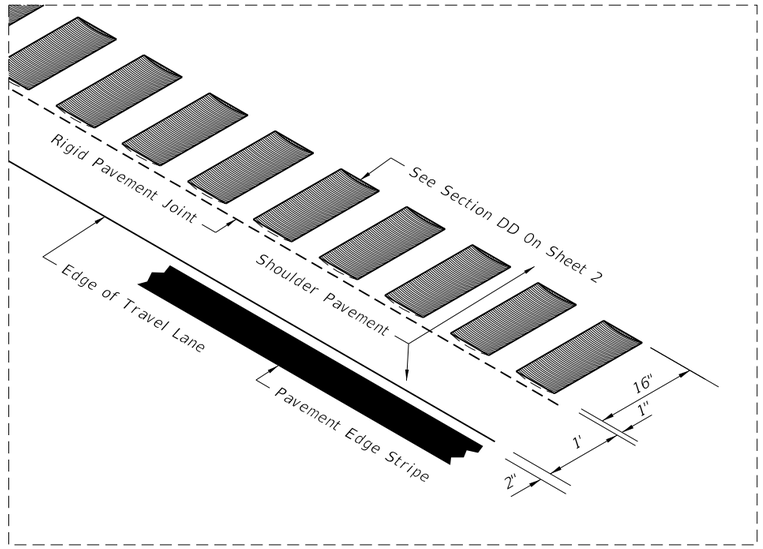

ISOMETRIC - LONGITUDINAL CUT (RIGID PAVEMENT)
INSET B

6/28/2012 2:05:59 PM rd960rh C:\d\projects\standards\roadway\00500-s\00518-03.dgn

LAST REVISION	REVISION	DESCRIPTION:			INDEX NO.	SHEET NO.
07/01/09			FDOT DESIGN STANDARDS 2013	RUMBLE STRIPS	518	3

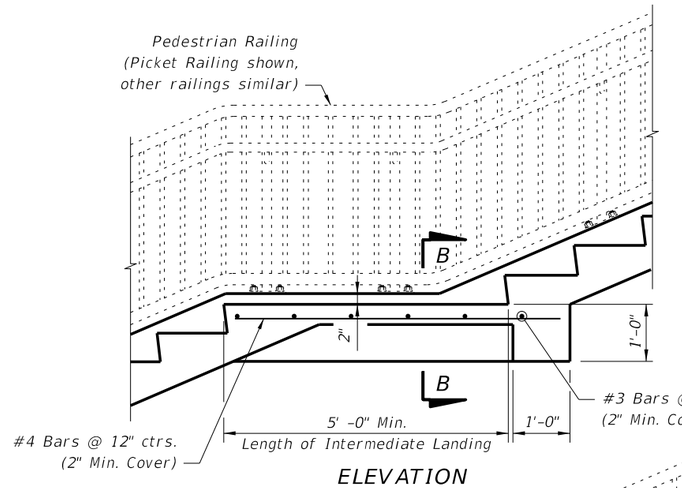

ELEVATION

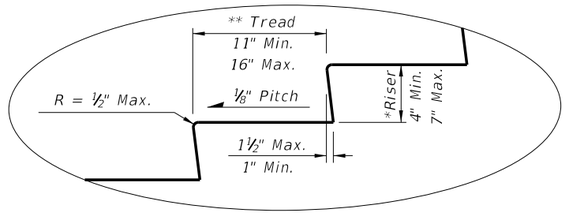

STAIR TREAD AND RISER DETAILS

* The greatest riser height within the flight of steps shall not exceed the smallest by more than ⅜".

** The greatest tread depth within the flight of steps shall not exceed the smallest by more than ⅜".

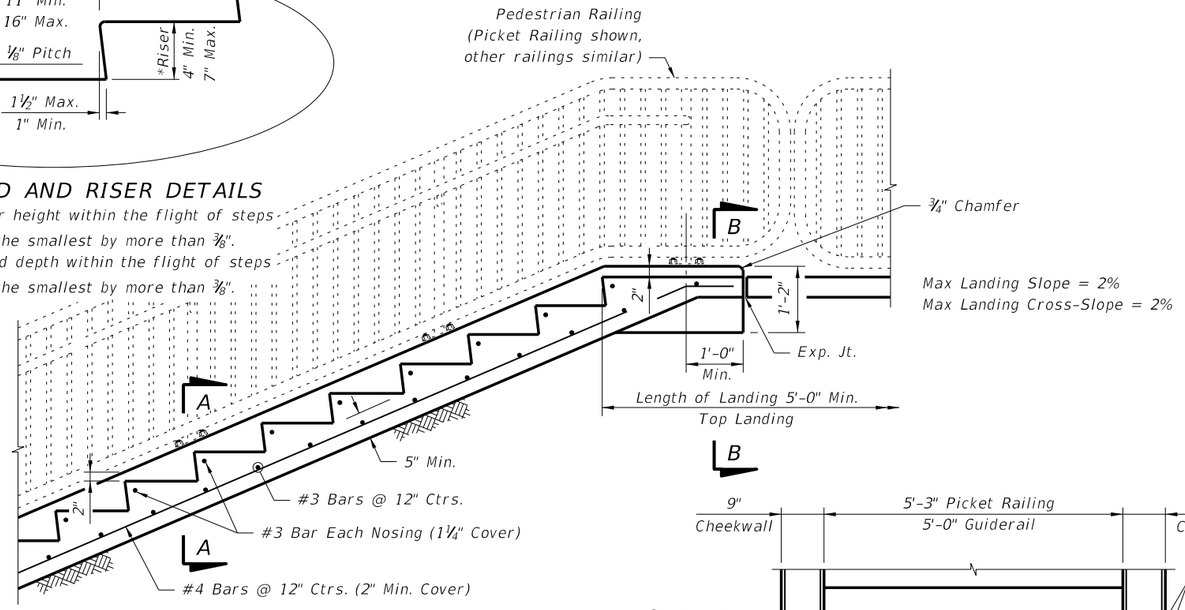

NOTE: Provide a maximum of 12 risers between landings.

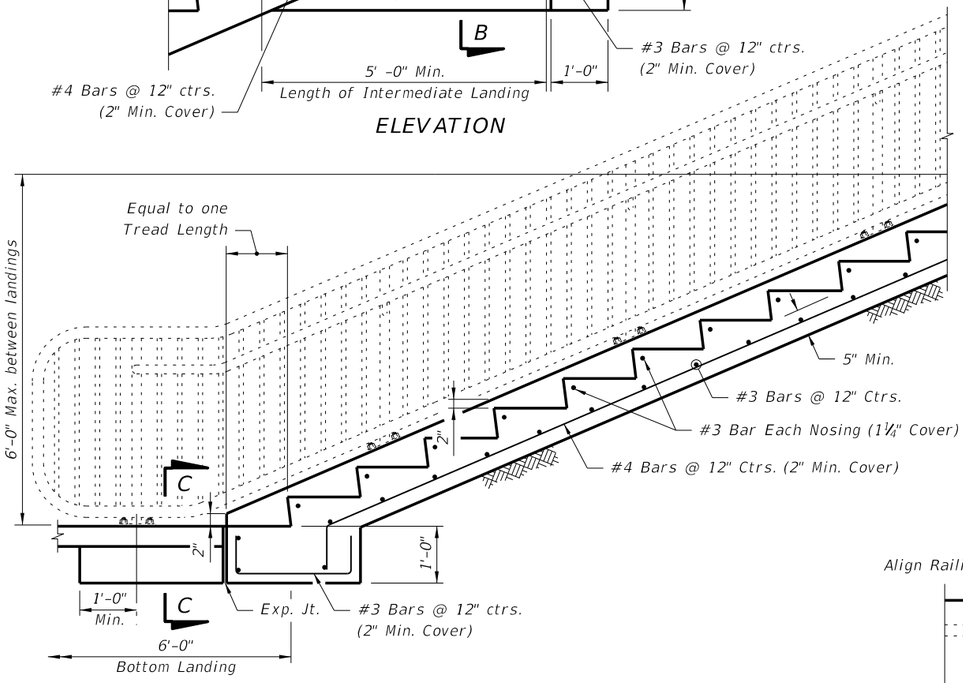

Max Landing Slope = 2%
Max Landing Cross-Slope = 2%

NOTES:

1. Do not use this Index for suspended (structural) steps or stairways.
2. Construct steps in accordance with Section 522 of the FDOT Standard Specifications.
3. Concrete: Class NS, Specification 347.
4. Reinforcing Steel: Grade 60, ASTM A615.
5. Tread Finish: Broom finish parallel to steps unless otherwise shown in Plans.
6. Pedestrian Railing: See Index Nos. 850, 860, 870, 880 or Project Specific Design.
7. Cost of concrete steps, landings and cheekwalls shall be paid for under the contract unit price for Class NS Concrete (Concrete Steps), CY. Cost of reinforcing steel shall be paid for under the contract unit price for Reinforcing Steel (Miscellaneous), LB.

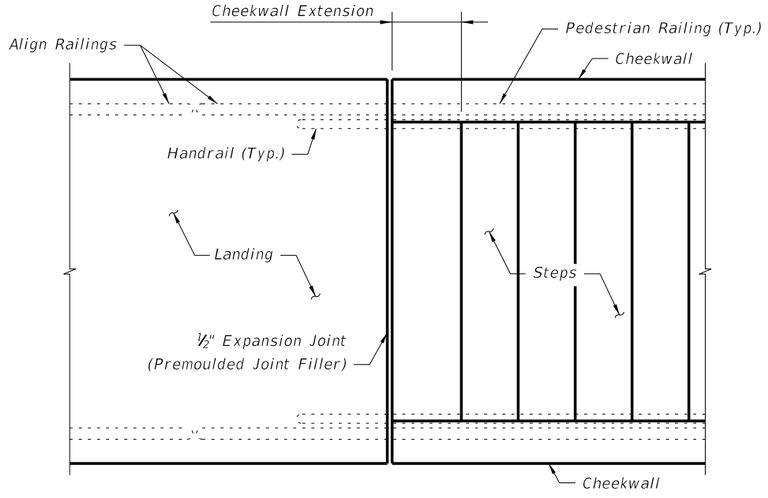

PLAN AT JUNCTION OF STEPS & LANDING
(Bottom Landing shown, Top Landing similar)

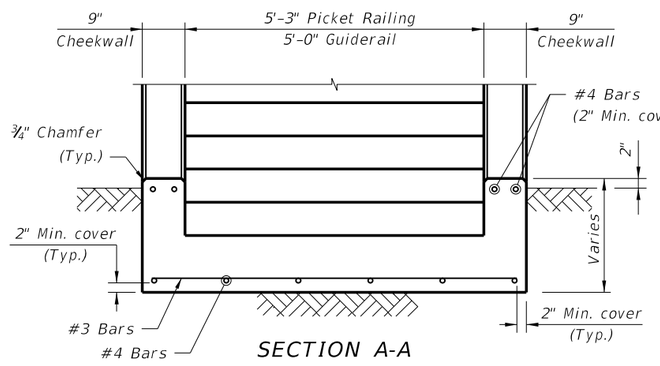

SECTION A-A

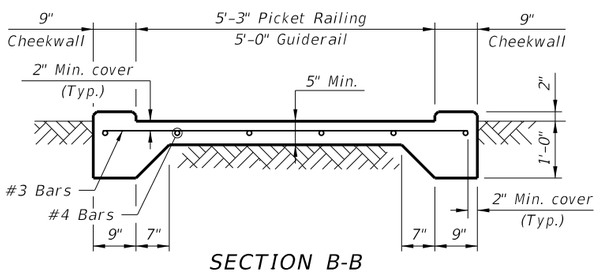

SECTION B-B

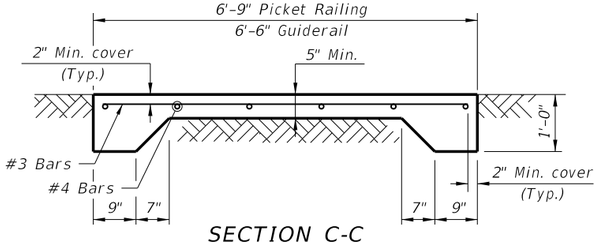

SECTION C-C

LAST REVISION	REVISION	DESCRIPTION:			INDEX NO.	SHEET NO.
01/01/07			FDOT DESIGN STANDARDS 2013	CONCRETE STEPS	521	1

6/28/2012 2:06:01 PM rd960rh C:\d\projects\standards\roadway\00500-s\00521-01.dgn

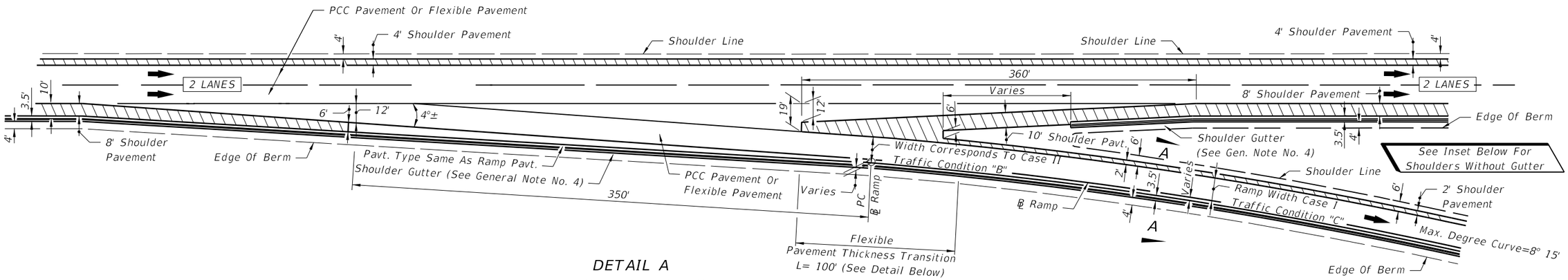

DETAIL A
TWO THRU LANES

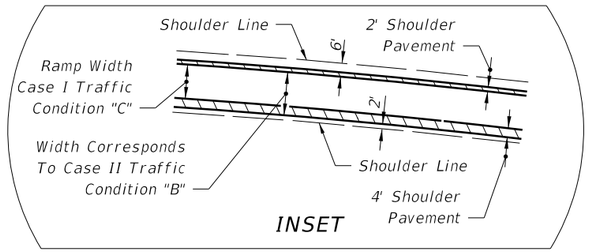

INSET

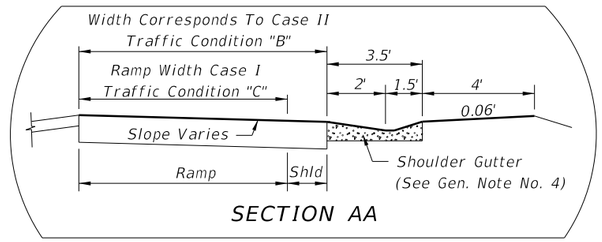

SECTION AA

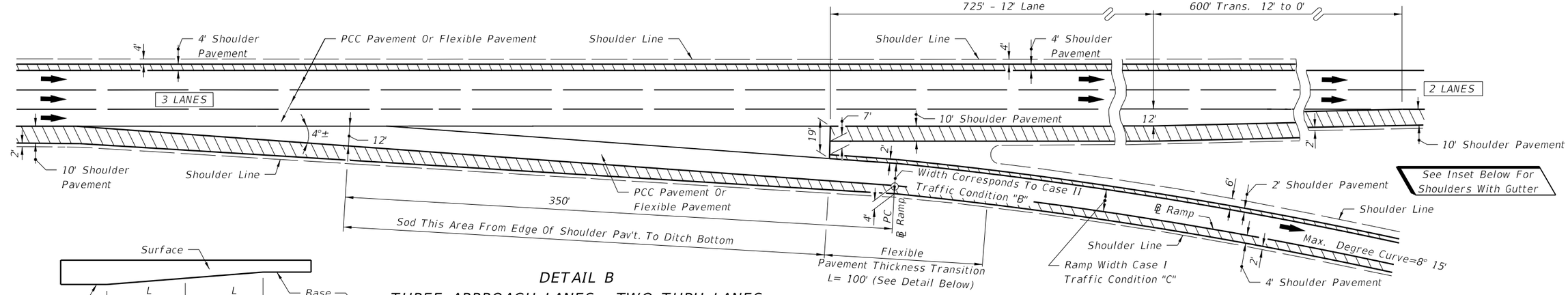

DETAIL B
THREE APPROACH LANES - TWO THRU LANES

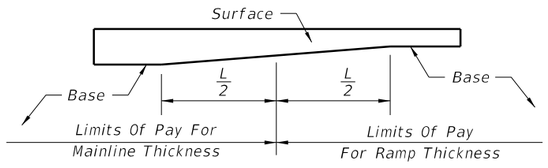

FLEXIBLE PAVEMENT THICKNESS TRANSITION

NOTE: For General Notes See Sheet No. 2

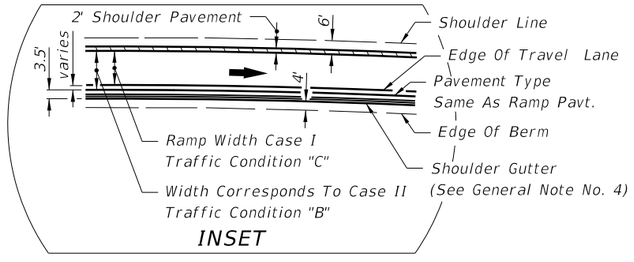

INSET

EXIT TERMINALS

SINGLE - LANE RAMPS

LAST REVISION	REVISION	DESCRIPTION:			INDEX NO.	SHEET NO.
04			FDOT DESIGN STANDARDS 2013	RAMP TERMINALS	525	1

C:\d\projects\standards\roadway\00500-s\00525-01.dgn
rd960rh
2:06:03 PM
6/28/2012

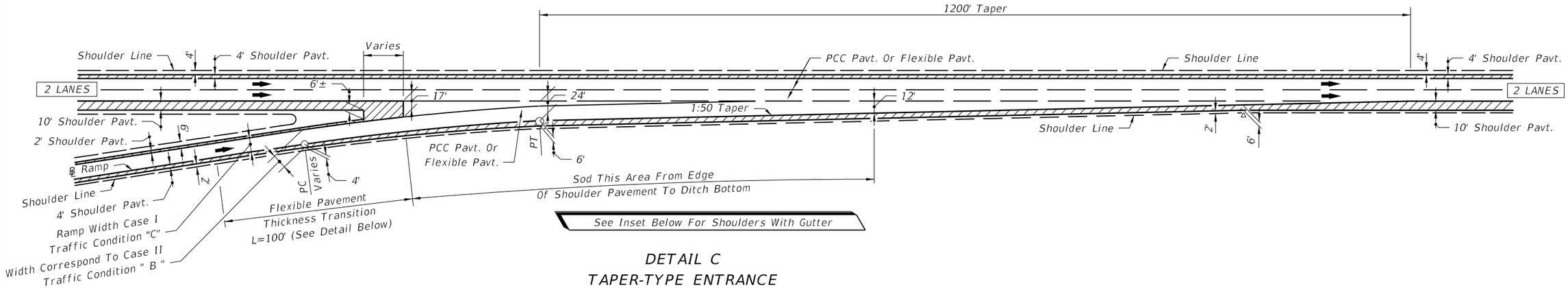

DETAIL C
TAPER-TYPE ENTRANCE

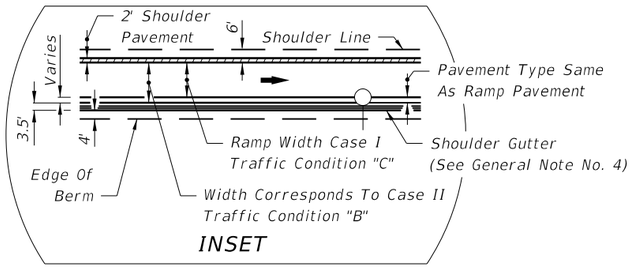

INSET

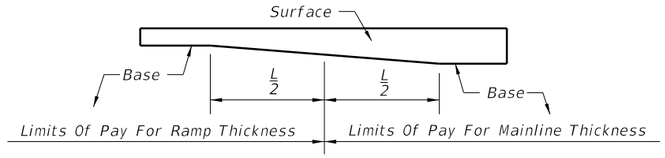

FLEXIBLE PAVT. THICKNESS TRANSITION

GENERAL NOTES

1. Taper-Type exit and entrance terminals as detailed shall not be used on ramps for which a speed of 50 MPH or greater cannot be maintained. For such ramps, parallel deceleration and acceleration lanes shall be used in place of tapers with lengths set according to AASHTO.

2. a. PCC Pavement Projects:
   Where shoulder pavement adjacent to shoulder gutter is less than 6' wide, it shall be identical to the adjacent roadway pavement beginning with the transverse joint nearest the point of 6' width.
   b. Flexible Pavement Projects:
   Where shoulder pavement used in conjunction with shoulder gutter is less than 6' uniform width, it shall be identical to the adjacent roadway pavement.

3. For concrete pavement joint details and layouts at entrance and exit ramp terminals see Index No. 305.

4. Shoulder gutter applications will be determined by drainage design.

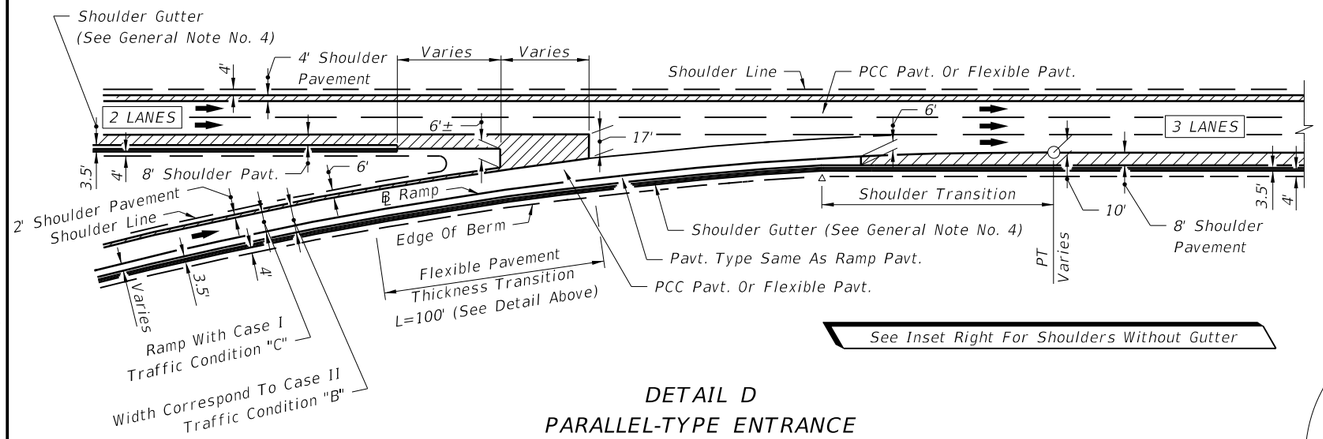

DETAIL D
PARALLEL-TYPE ENTRANCE

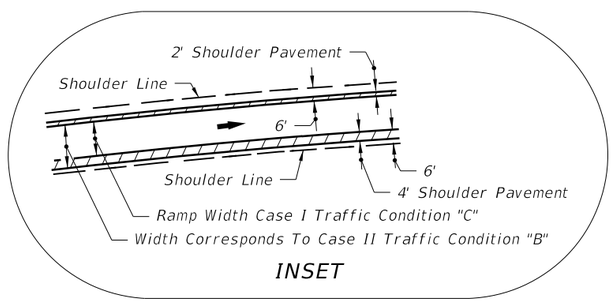

INSET

ENTRANCE TERMINALS
SINGLE-LANE RAMPS

C:\d\projects\standards\roadway\00500-s\00525-02.dgn
rd960rh
2:06:05 PM
6/28/2012

LAST REVISION	REVISION	DESCRIPTION:				
04			FDOT DESIGN STANDARDS 2013	RAMP TERMINALS	INDEX NO. 525	SHEET NO. 2

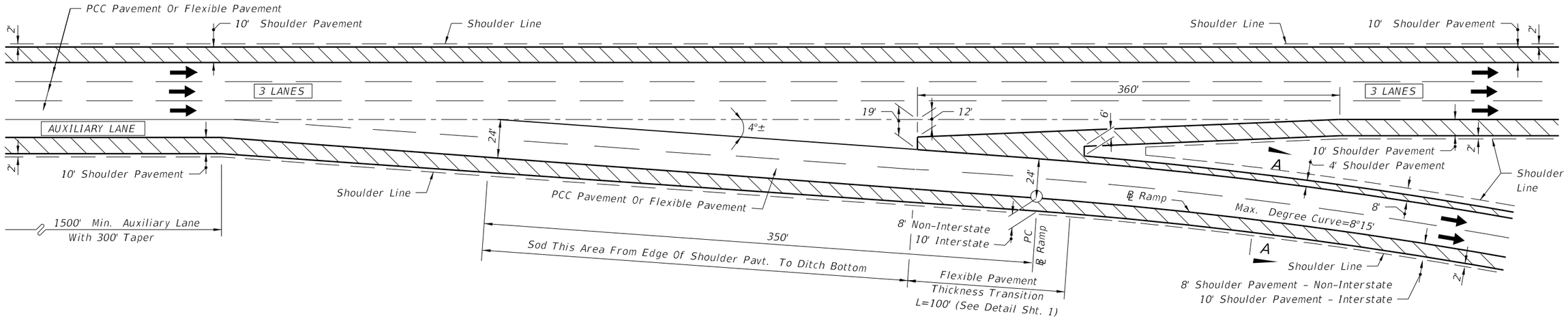

THREE THRU LANES - APPROACH AUXILIARY LANE

EXIT TERMINALS

TWO-LANE RAMPS

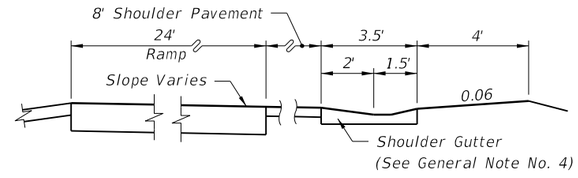

SECTION WHEN SHOULDER GUTTER USED
SECTION AA

C:\d\projects\standards\roadway\00500-s\00525-03.dgn
rd960rh
2:06:07 PM
6/28/2012

LAST REVISION	REVISION	DESCRIPTION:		FDOT DESIGN STANDARDS 2013	RAMP TERMINALS	INDEX NO.	SHEET NO.
00						525	3

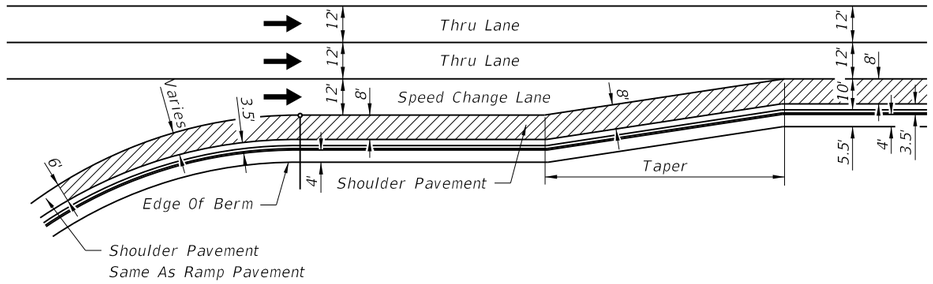

ACCELERATION LANE WITH SHOULDER GUTTER

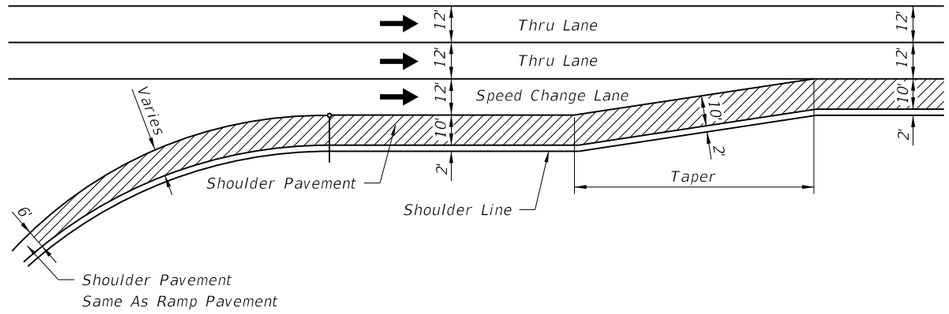

ACCELERATION LANE WITHOUT SHOULDER GUTTER

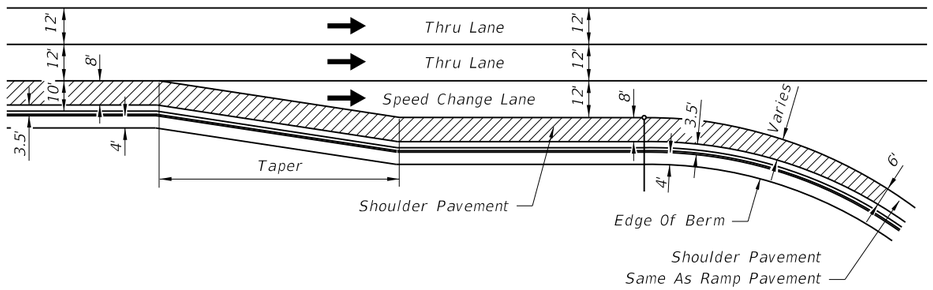

DECELERATION LANE WITH SHOULDER GUTTER

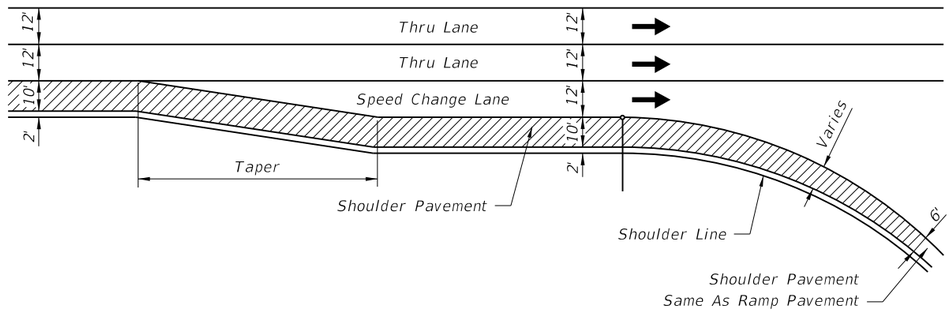

DECELERATION LANE WITHOUT SHOULDER GUTTER

SHOULDER TREATMENT
AT SPEED CHANGE LANES AT FREEWAY RAMP TERMINALS

FREEWAY RAMP TERMINALS

C:\d\projects\standards\roadway\00500-s\00525-04.dgn
rd960rh
2:06:09 PM
6/28/2012

LAST REVISION	REVISION	DESCRIPTION:		FDOT DESIGN STANDARDS 2013	RAMP TERMINALS	INDEX NO.	SHEET NO.
07/01/05						525	4

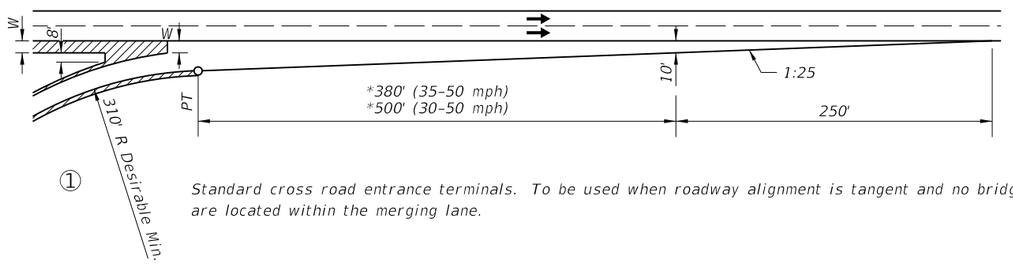

①

Standard cross road entrance terminals. To be used when roadway alignment is tangent and no bridges are located within the merging lane.

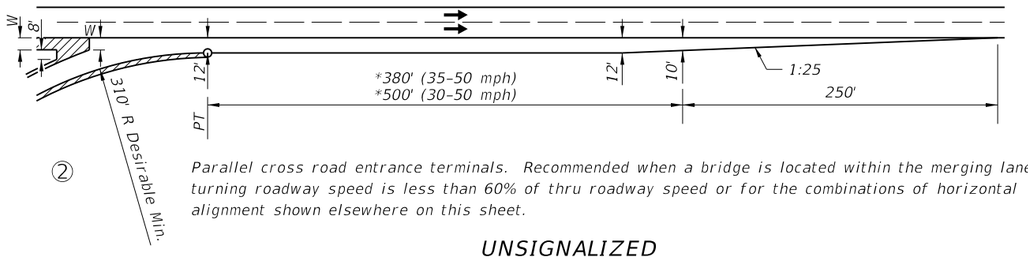

②

Parallel cross road entrance terminals. Recommended when a bridge is located within the merging lane, turning roadway speed is less than 60% of thru roadway speed or for the combinations of horizontal alignment shown elsewhere on this sheet.

UNSIGNALIZED ENTRANCES

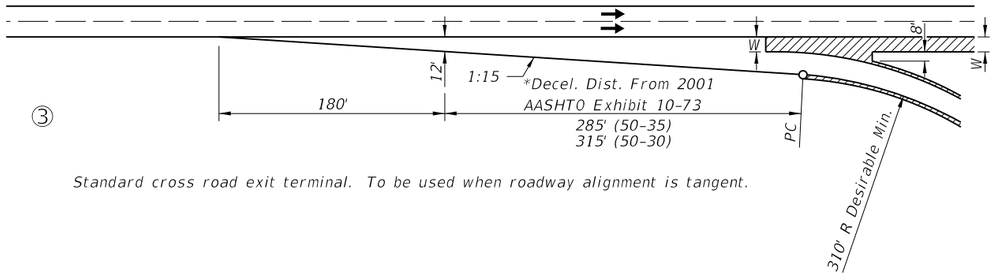

③

Standard cross road exit terminal. To be used when roadway alignment is tangent.

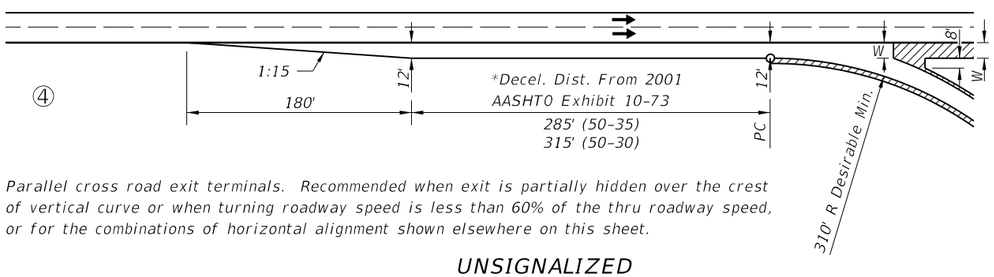

④

Parallel cross road exit terminals. Recommended when exit is partially hidden over the crest of vertical curve or when turning roadway speed is less than 60% of the thru roadway speed, or for the combinations of horizontal alignment shown elsewhere on this sheet.

UNSIGNALIZED EXITS

FOOTNOTES:

W Normal shoulder pavement width.

** Adjust for grades if greater than 2% (See Exhibit 10-71, AASHTO).*

RAMP TERMINALS

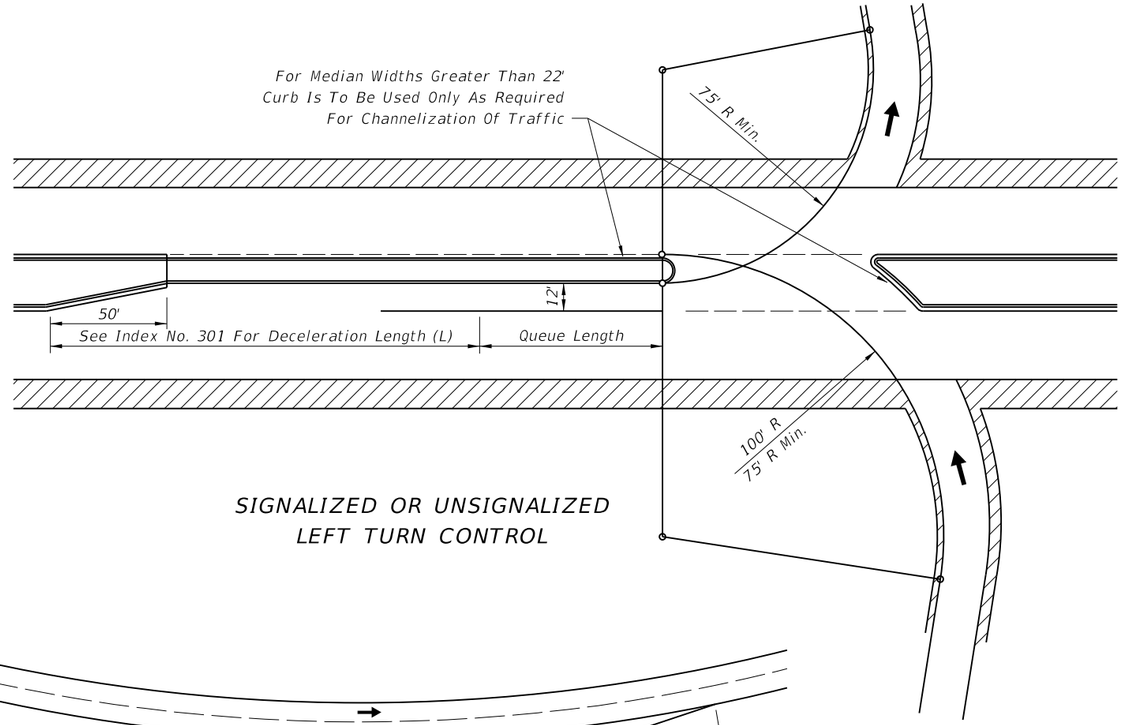

SIGNALIZED OR UNSIGNALIZED LEFT TURN CONTROL

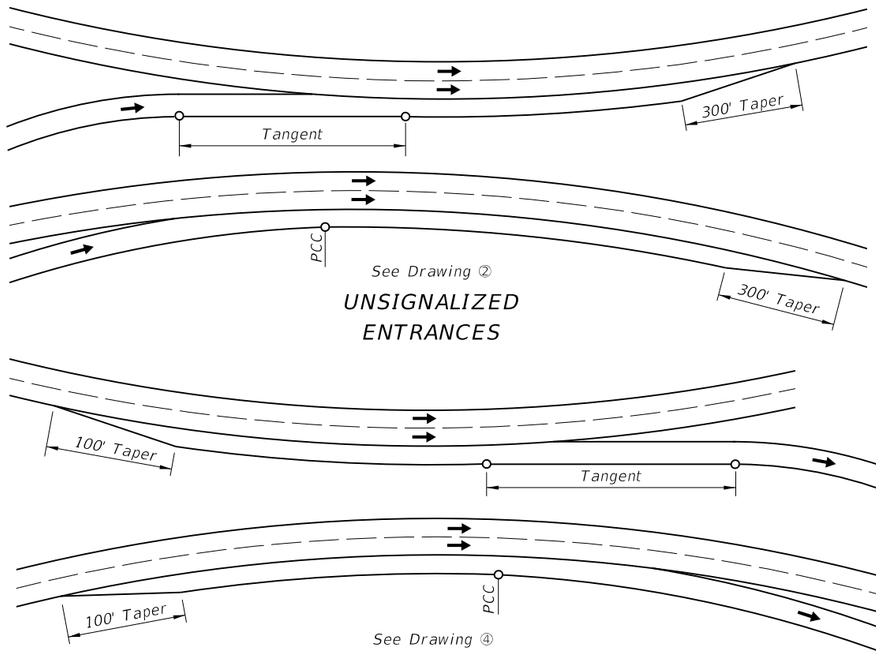

UNSIGNALIZED ENTRANCES

UNSIGNALIZED EXITS

NOTE: Ramp terminals on curves should be avoided when possible.

RAMP TERMINALS ON CURVES

CROSSROAD TERMINALS

LAST REVISION	REVISION	DESCRIPTION:	FDOT DESIGN STANDARDS 2013	RAMP TERMINALS	INDEX NO.	SHEET NO.
07/01/05					525	5

C:\d\projects\standards\roadway\00500-s\00525-05.dgn rd960rh 2:06:11 PM 6/28/2012

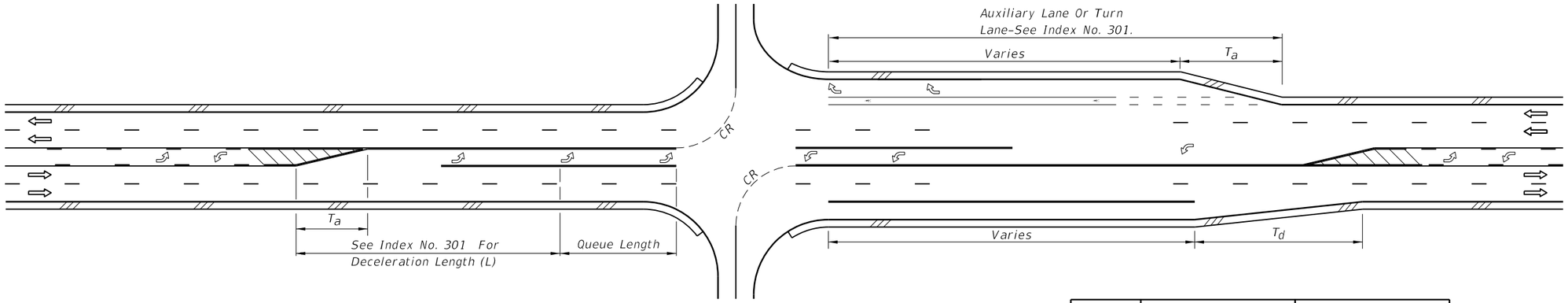

4-LANE WITH TWO-WAY LEFT-TURN LANES

DESIGN SPEED (mph)	T_a (FEET)	T_d
	ADD LANE	LANE DROP
<30	50' (± 1:4)	1:25
30-45		1:30
>45		1:40

Note: For locations with unrelocatable control points minimum taper rates for lane drop (T_d) will be 1:20.

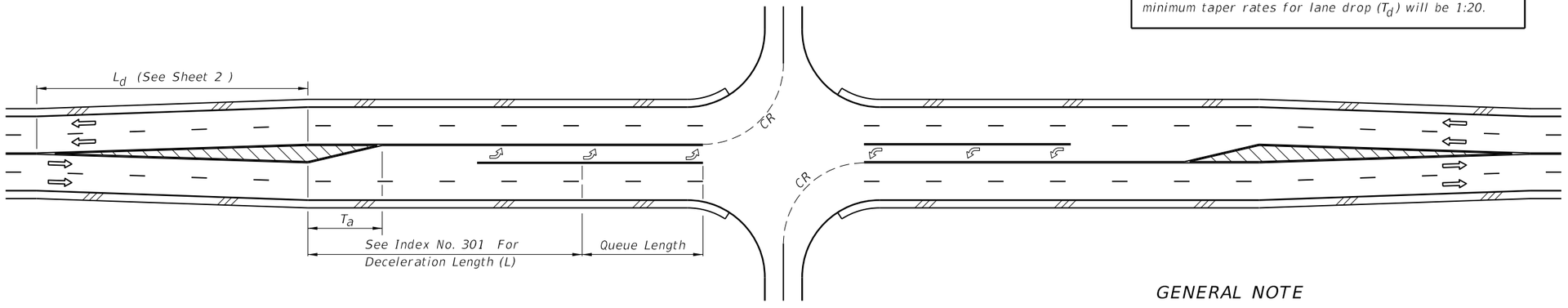

4-LANE UNDIVIDED FLARED - SYMMETRICAL

GENERAL NOTE

1. For pavement markings refer to Index No. 17346.

INTERSECTION TURNS AND STORAGE

6/28/2012 2:06:13 PM rd960rh C:\d\projects\standards\roadway\00500-s\00526-01.dgn

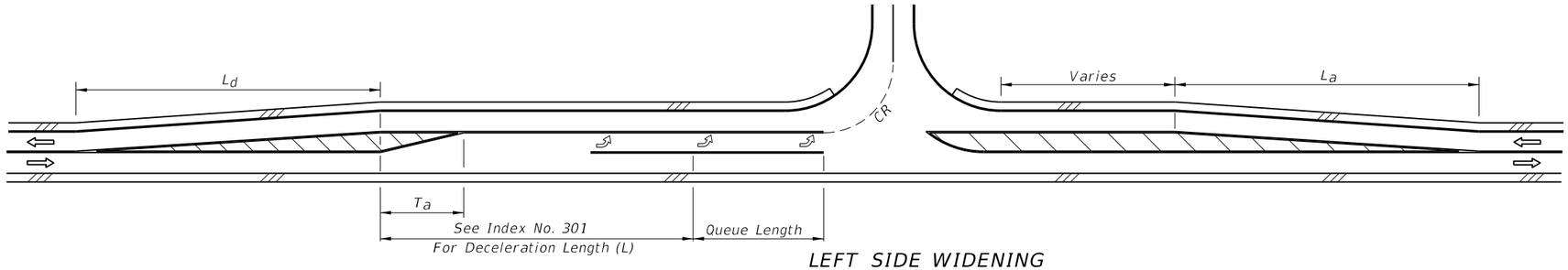

LEFT SIDE WIDENING

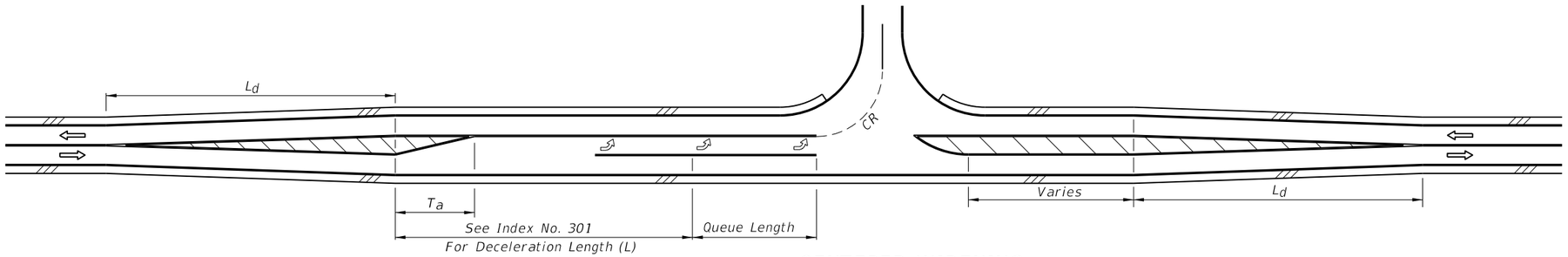

CENTERED WIDENING

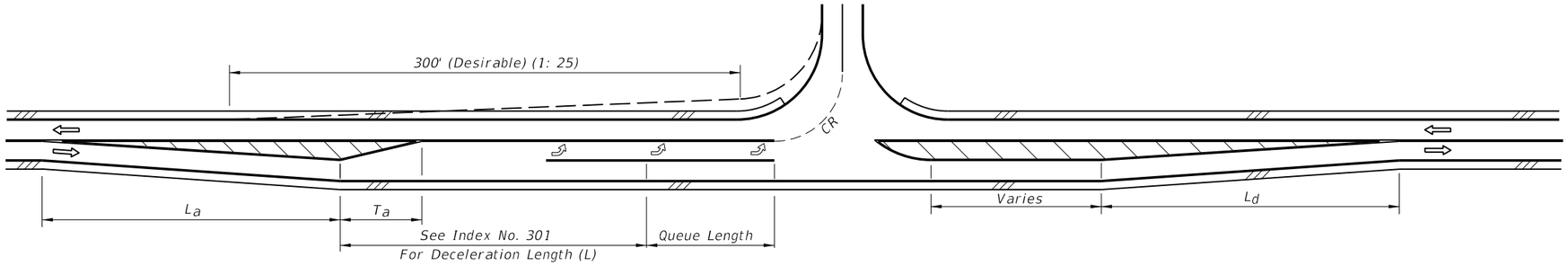

RIGHT SIDE WIDENING

DESIGN SPEED (mph)	L_a (Ft.)	
	STANDARD	MINIMUM UNDER RESTRAINTS
30	180	120
40	320	150
50	500	180
60	720	240

(mph)	L_d (Ft.)	
30	180	120
40	240	150
50	360	180
60	480	240

FLARED & PAINTED LEFT TURNS FOR 2-LANE 2-WAY ROADWAYS

6/28/2012 2:06:15 PM rd960rh C:\d\projects\standards\roadway\00500-s\00526-02.dgn

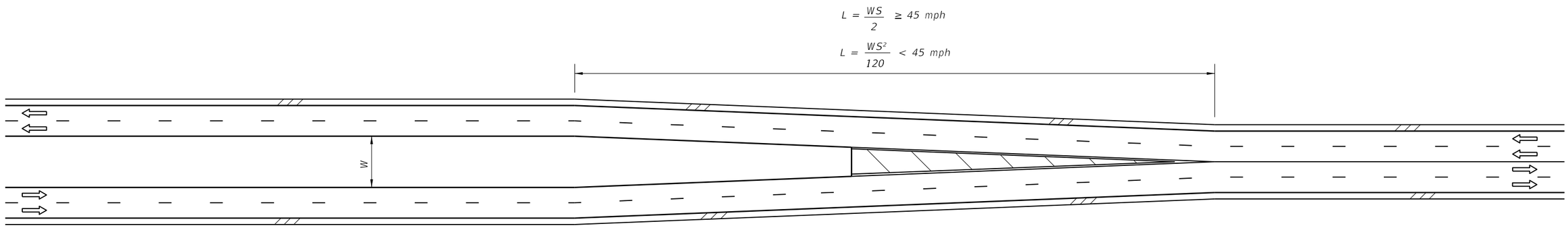

4-LANE DIVIDED TO 4-LANE UNDIVIDED

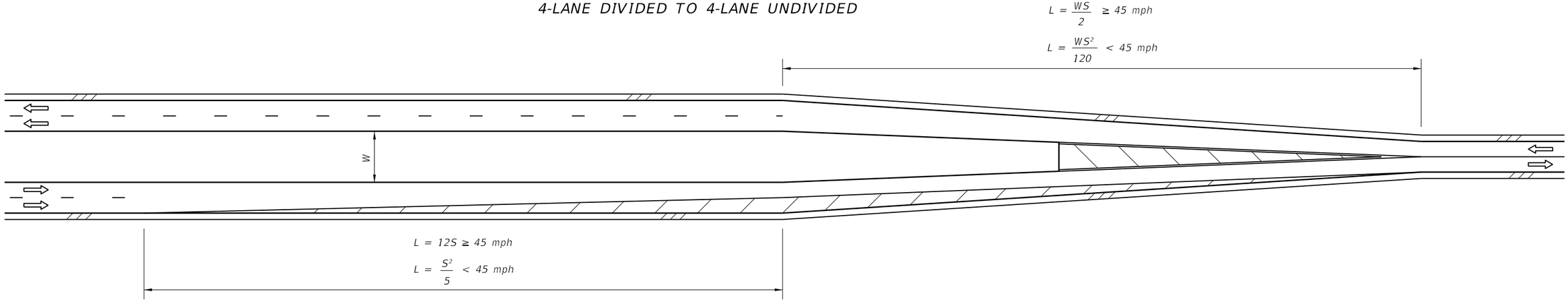

4-LANE DIVIDED TO 2-LANE UNDIVIDED

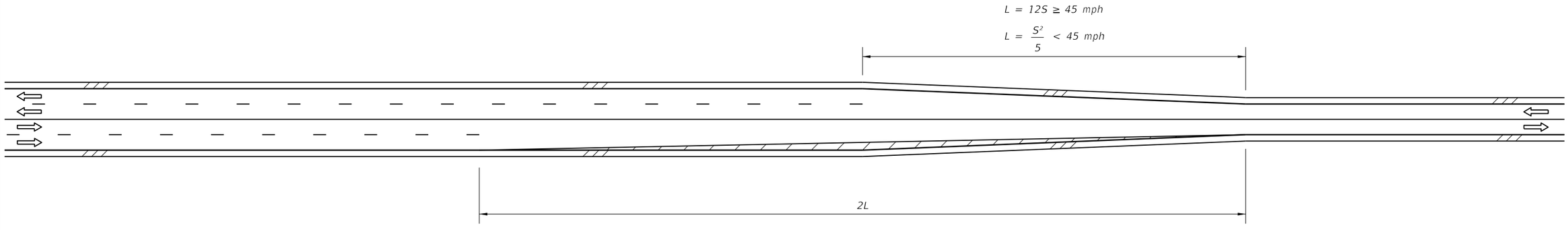

4-LANE UNDIVIDED TO 2-LANE UNDIVIDED

LANE DIVERGENCE AND CONVERGENCE FOR CENTERED ROADWAYS

S=Design speed (mph)

C:\d\projects\standards\roadway\00500-s\00526-03.dgn
rd960rh
2:06:17 PM
6/28/2012

LAST REVISION	REVISION	DESCRIPTION:		FDOT DESIGN STANDARDS 2013	ROADWAY TRANSITIONS	INDEX NO.	SHEET NO.
00						526	3

CONNECTING FLARE WITH PAVED SHOULDERS TO
EXISTING ROADWAY WITHOUT PAVED SHOULDERS

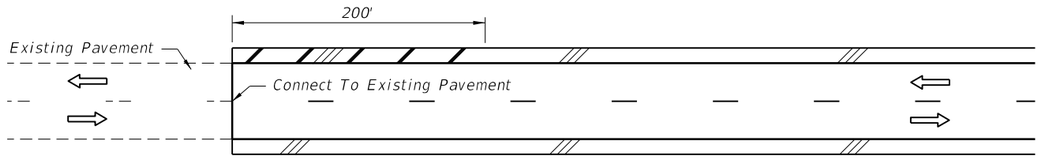

CONNECTING SIMILAR WIDTH PAVEMENTS

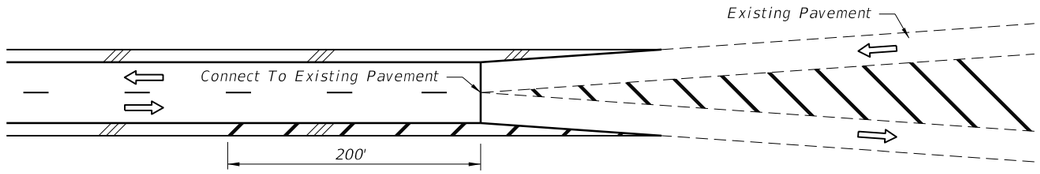

CONNECTING ROADWAY WITH PAVED SHOULDERS TO
EXISTING SYMMETRICAL FLARE WITHOUT PAVED SHOULDERS

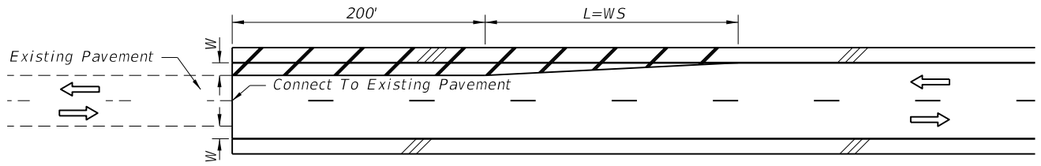

CONNECTING DIFFERENT WIDTH PAVEMENTS

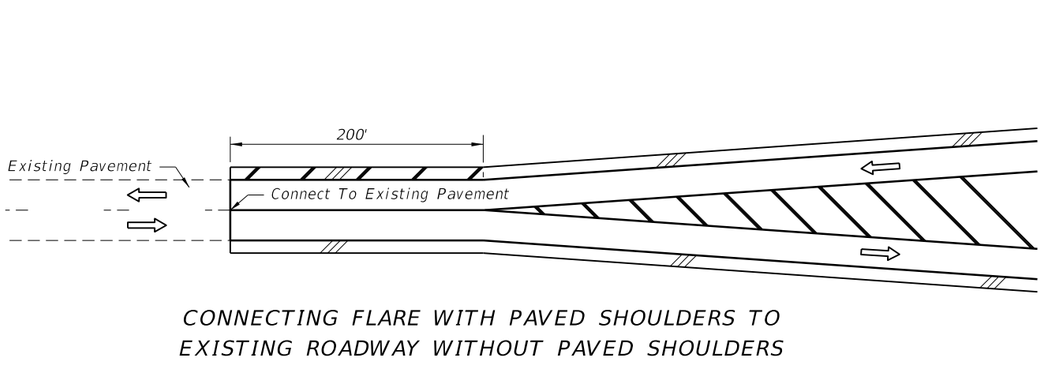

CONNECTING ROADWAY WITH PAVED SHOULDERS TO
EXISTING ASYMMETRICAL FLARE WITHOUT PAVED SHOULDERS

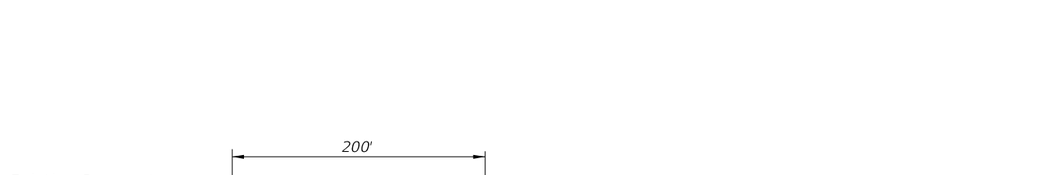

FLARED - PAVED SHOULDERS

S=Design speed (mph).

PAVED SHOULDER TREATMENT AT TRANSITIONS AND CONNECTIONS

LAST REVISION	REVISION	DESCRIPTION:		FDOT DESIGN STANDARDS 2013	ROADWAY TRANSITIONS	INDEX NO.	SHEET NO.
00						526	4

C:\d\projects\standards\roadway\00500-s\00526-04.dgn
rd960rh
2:06:19 PM
6/28/2012

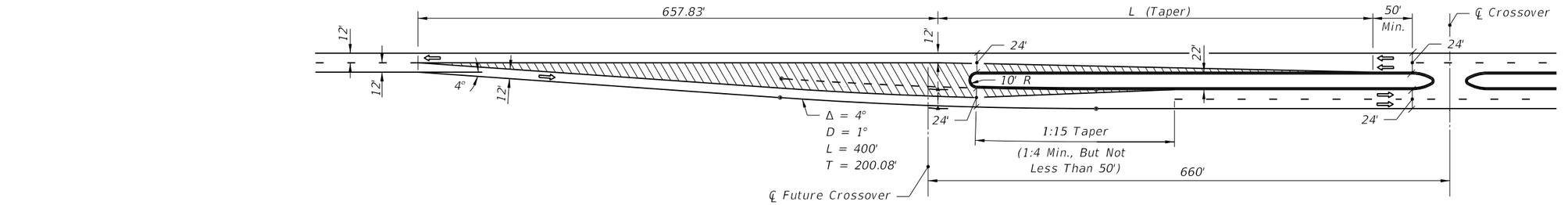

22' MEDIAN

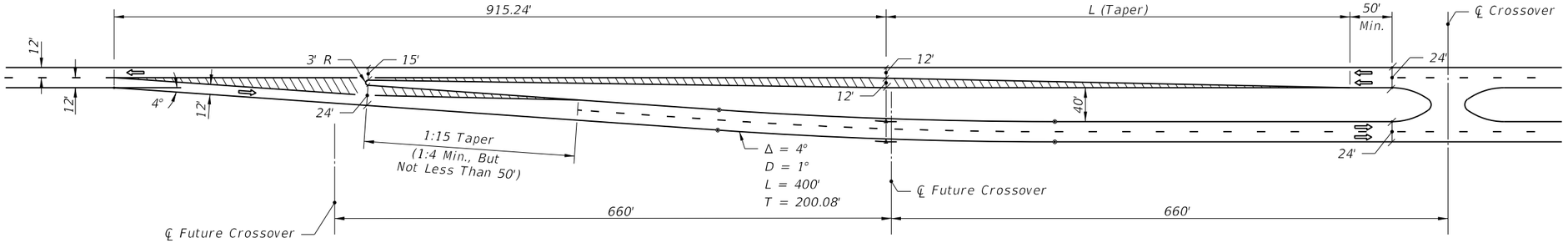

40' MEDIAN

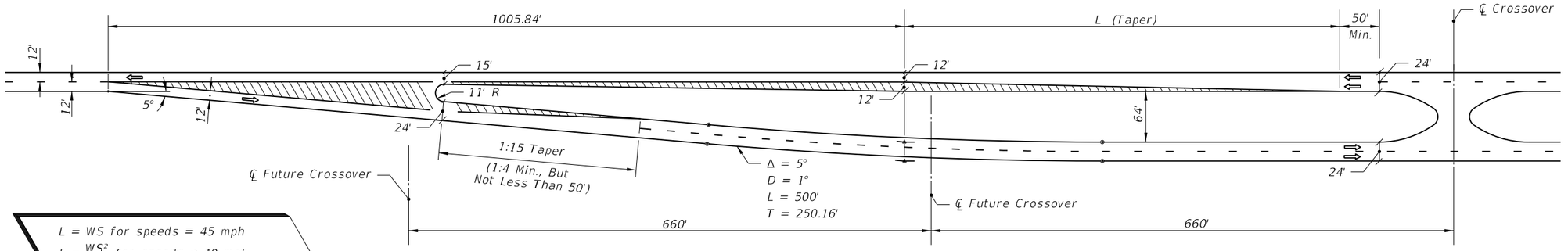

$L = WS$ for speeds = 45 mph

$L = \frac{WS^2}{60}$ for speeds ≤ 40 mph

Where:

W=Width of lateral transition in feet.

S=Design speed.

64' MEDIAN

NOTES FOR SHEETS 5 THRU 8

1. The transition details as represented on sheets 5 thru 8 are intended as guidelines only. The transition lengths, curve data, nose radii and offsets are valid only for tangent alignment, design speeds ≤ 45 mph, the median widths and lane widths shown.

2. Approach lane departures (Δ = 5°) are suitable for design speeds up to 60 mph. Interior curves (D = 1°) are suitable for normal crown for design speeds up to 50 mph. Merging curves (D ≥ 5°) will require superelevation.

3. The geometrics of these schemes are associated with the standard subsectional spacing for side roads, but in any case will require modification to accommodate side road location, multilane and/or divided side roads, oblique side roads, crossover widths, storage and speed change lane requirements, and, other related features.

LEFT ROADWAY CENTERED ON APPROACH ROADWAY

TWO LANE TO FOUR LANE TRANSITION

C:\d\projects\standards\roadway\00500-s\00526-05.dgn
rd960rh
2:06:21 PM
6/28/2012

LAST REVISION	REVISION	DESCRIPTION:		FDOT DESIGN STANDARDS 2013	ROADWAY TRANSITIONS	INDEX NO.	SHEET NO.
00						526	5

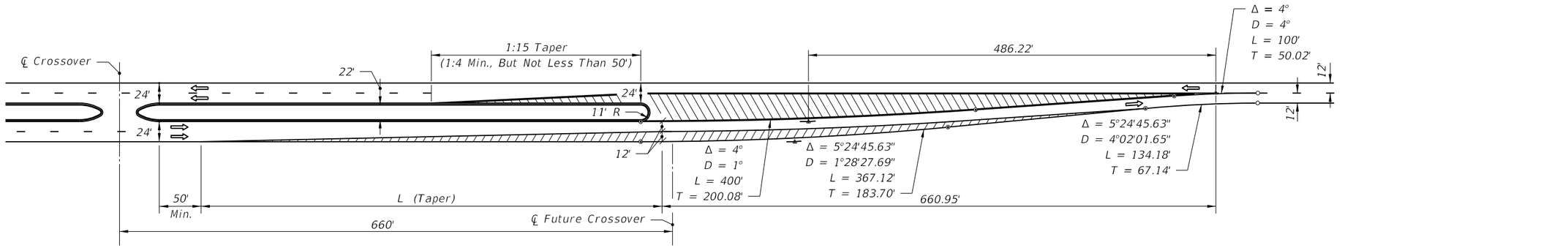

22' MEDIAN

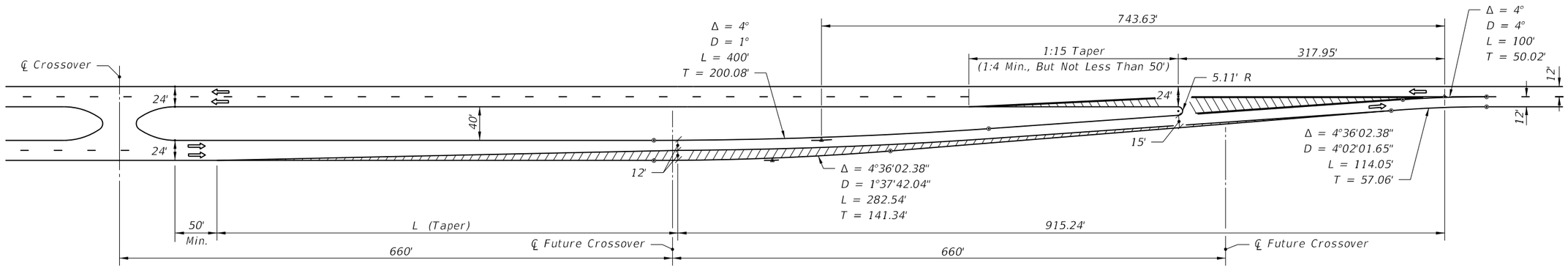

40' MEDIAN

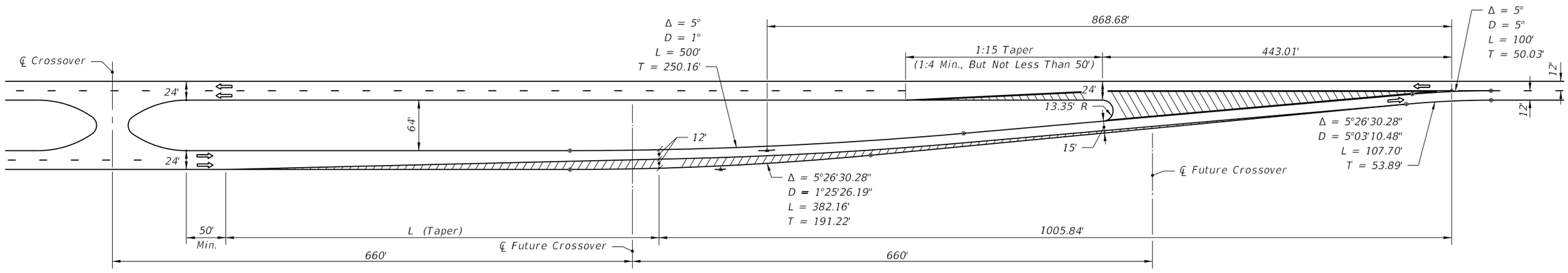

$L = WS$ for speeds = 45 mph

$L = \frac{WS^2}{60}$ for speeds ≤ 40 mph

Where:
W = Width of lateral transition in feet.
S = Design speed.

64' MEDIAN

LEFT ROADWAY CENTERED ON THRU ROADWAY

FOUR LANE TO TWO LANE TRANSITION

C:\d\projects\standards\roadway\00500-s\00526-06.dgn rd960rh 2:06:23 PM 6/28/2012

LAST REVISION	REVISION	DESCRIPTION:		FDOT DESIGN STANDARDS 2013	ROADWAY TRANSITIONS	INDEX NO.	SHEET NO.
00						526	6

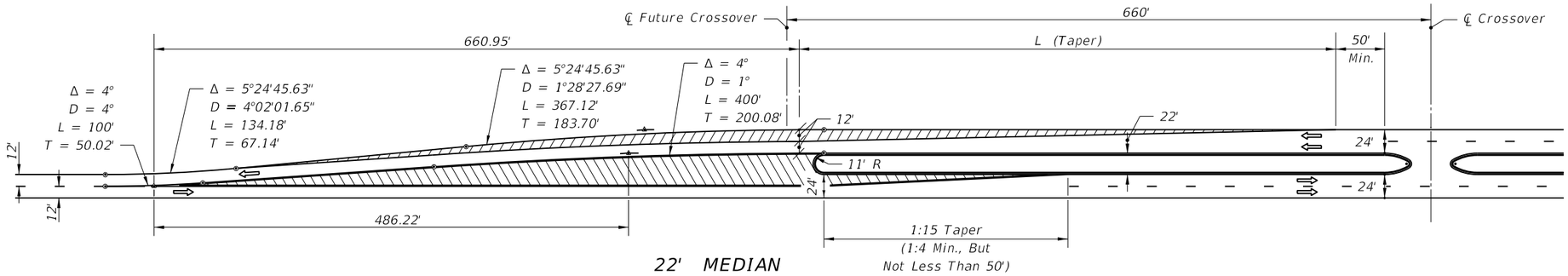

22' MEDIAN

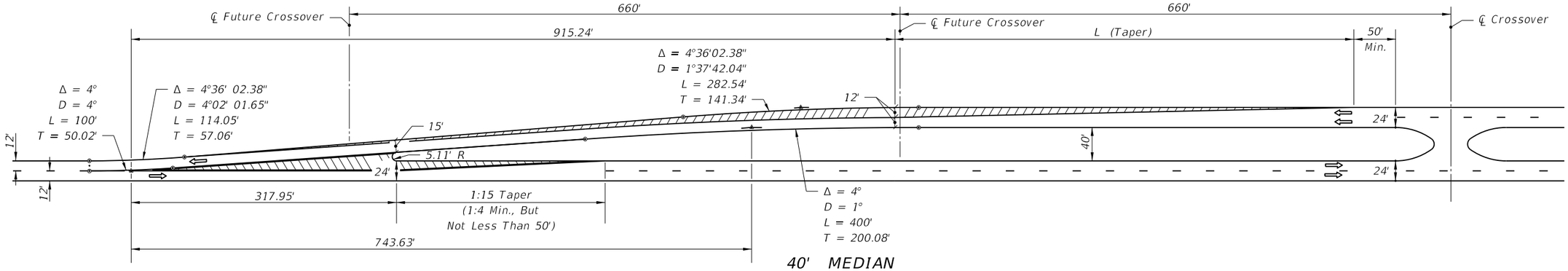

40' MEDIAN

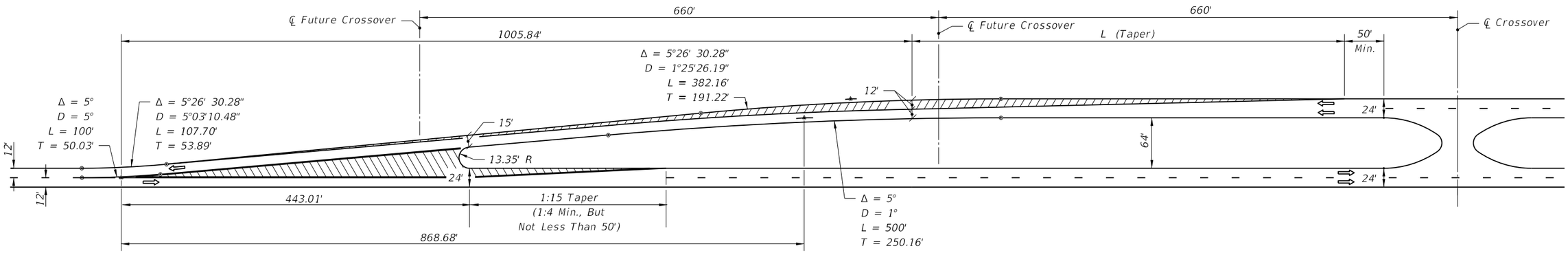

64' MEDIAN

$L = WS$ for speeds = 45 mph

$L = \frac{WS^2}{60}$ for speeds ≤ 40 mph

Where:
W = Width of lateral transition in feet.
S = Design speed.

RIGHT ROADWAY CENTERED ON APPROACH ROADWAY

TWO LANE TO FOUR LANE TRANSITION

C:\d\projects\standards\roadway\00500-s\00526-07.dgn
rd960rh
2:06:25 PM
6/28/2012

LAST REVISION	REVISION	DESCRIPTION:			INDEX NO.	SHEET NO.
00			FDOT DESIGN STANDARDS 2013	ROADWAY TRANSITIONS	526	7

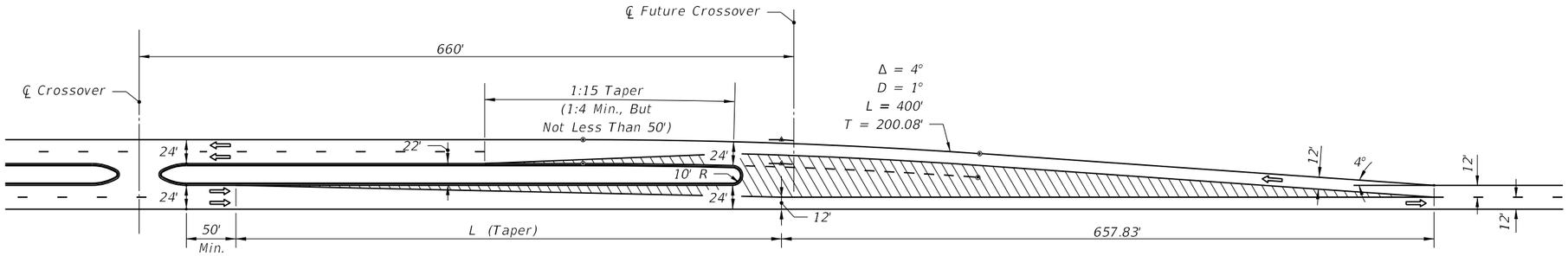

22' MEDIAN

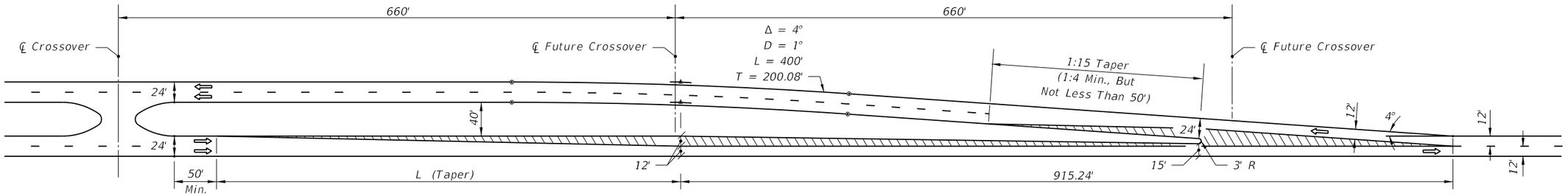

40' MEDIAN

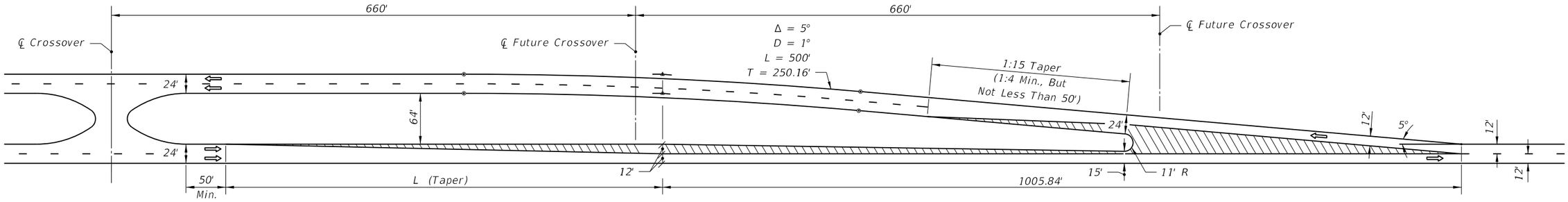

64' MEDIAN

$L = WS$ for speeds = 45 mph

$L = \frac{WS^2}{60}$ for speeds ≤ 40 mph

Where:

W = Width of lateral transition in feet.

S = Design speed.

RIGHT ROADWAY CENTERED ON THRU ROADWAY

FOUR LANE TO TWO LANE TRANSITION

C:\d\projects\standards\roadway\00500-s\00526-08.dgn rd960rh 2:06:27 PM 6/28/2012

LAST REVISION	REVISION	DESCRIPTION:		FDOT DESIGN STANDARDS 2013	ROADWAY TRANSITIONS	INDEX NO.	SHEET NO.
00						526	8

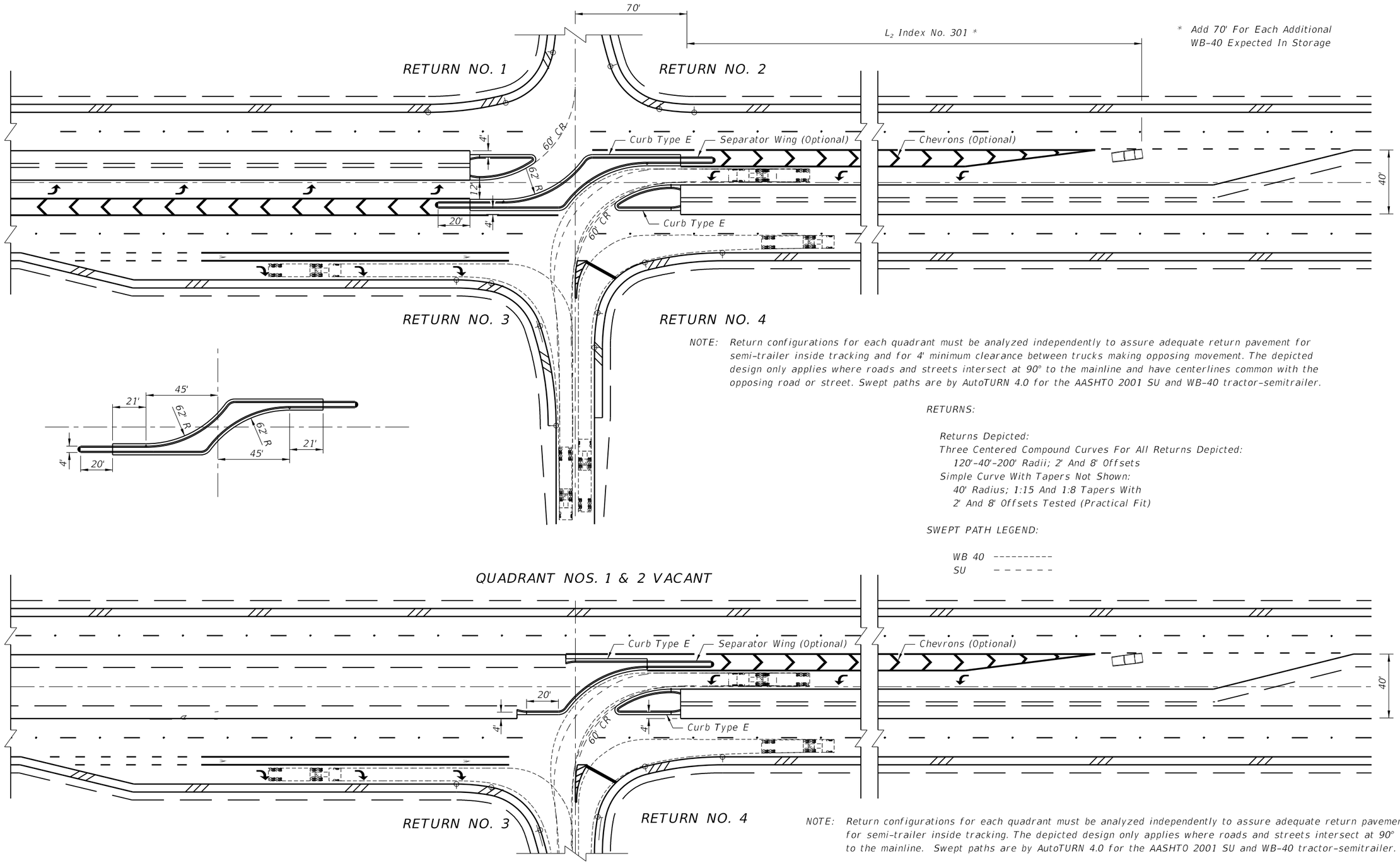

NOTE: Return configurations for each quadrant must be analyzed independently to assure adequate return pavement for semi-trailer inside tracking and for 4' minimum clearance between trucks making opposing movement. The depicted design only applies where roads and streets intersect at 90° to the mainline and have centerlines common with the opposing road or street. Swept paths are by AutoTURN 4.0 for the AASHTO 2001 SU and WB-40 tractor-semitrailer.

RETURNS:

Returns Depicted:
Three Centered Compound Curves For All Returns Depicted:
120'-40'-200' Radii; 2' And 8' Offsets
Simple Curve With Tapers Not Shown:
40' Radius; 1:15 And 1:8 Tapers With
2' And 8' Offsets Tested (Practical Fit)

SWEPT PATH LEGEND:

WB 40 ----------
SU – – – – – –

NOTE: Return configurations for each quadrant must be analyzed independently to assure adequate return pavement for semi-trailer inside tracking. The depicted design only applies where roads and streets intersect at 90° to the mainline. Swept paths are by AutoTURN 4.0 for the AASHTO 2001 SU and WB-40 tractor-semitrailer.

40' MEDIAN • 4-LANE DIVIDED • PARALLEL TURN BAY • 2001 AASHTO SU & WB-40

LAST REVISION	REVISION	DESCRIPTION:		FDOT DESIGN STANDARDS 2013	DIRECTIONAL MEDIAN OPENINGS	INDEX NO.	SHEET NO.
04						527	1

C:\d\projects\standards\roadway\00500-s\00527-01.dgn
rd960rh
2:06:28 PM
6/28/2012

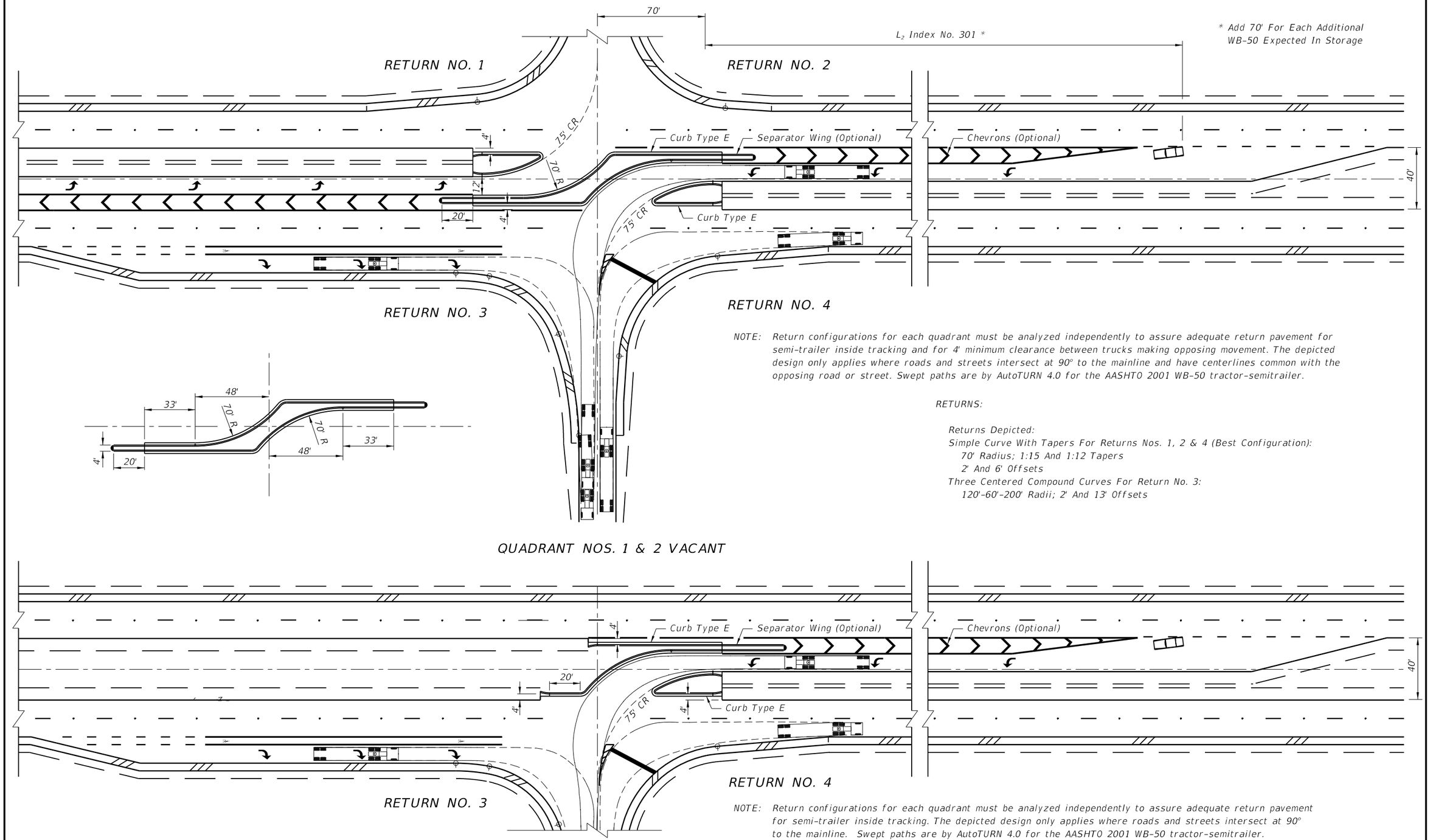

NOTE: *Return configurations for each quadrant must be analyzed independently to assure adequate return pavement for semi-trailer inside tracking and for 4' minimum clearance between trucks making opposing movement. The depicted design only applies where roads and streets intersect at 90° to the mainline and have centerlines common with the opposing road or street. Swept paths are by AutoTURN 4.0 for the AASHTO 2001 WB-50 tractor-semitrailer.*

RETURNS:

Returns Depicted:
Simple Curve With Tapers For Returns Nos. 1, 2 & 4 (Best Configuration):
70' Radius; 1:15 And 1:12 Tapers
2' And 6' Offsets
Three Centered Compound Curves For Return No. 3:
120'-60'-200' Radii; 2' And 13' Offsets

NOTE: *Return configurations for each quadrant must be analyzed independently to assure adequate return pavement for semi-trailer inside tracking. The depicted design only applies where roads and streets intersect at 90° to the mainline. Swept paths are by AutoTURN 4.0 for the AASHTO 2001 WB-50 tractor-semitrailer.*

40' MEDIAN 4-LANE DIVIDED • PARALLEL TURN BAY • 2001 AASHTO WB-50

LAST REVISION	REVISION	DESCRIPTION:				
04			FDOT DESIGN STANDARDS 2013	DIRECTIONAL MEDIAN OPENINGS	INDEX NO. 527	SHEET NO. 2

C:\d\projects\standards\roadway\00500-s\00527-02.dgn
rd960rh
2:06:30 PM
6/28/2012

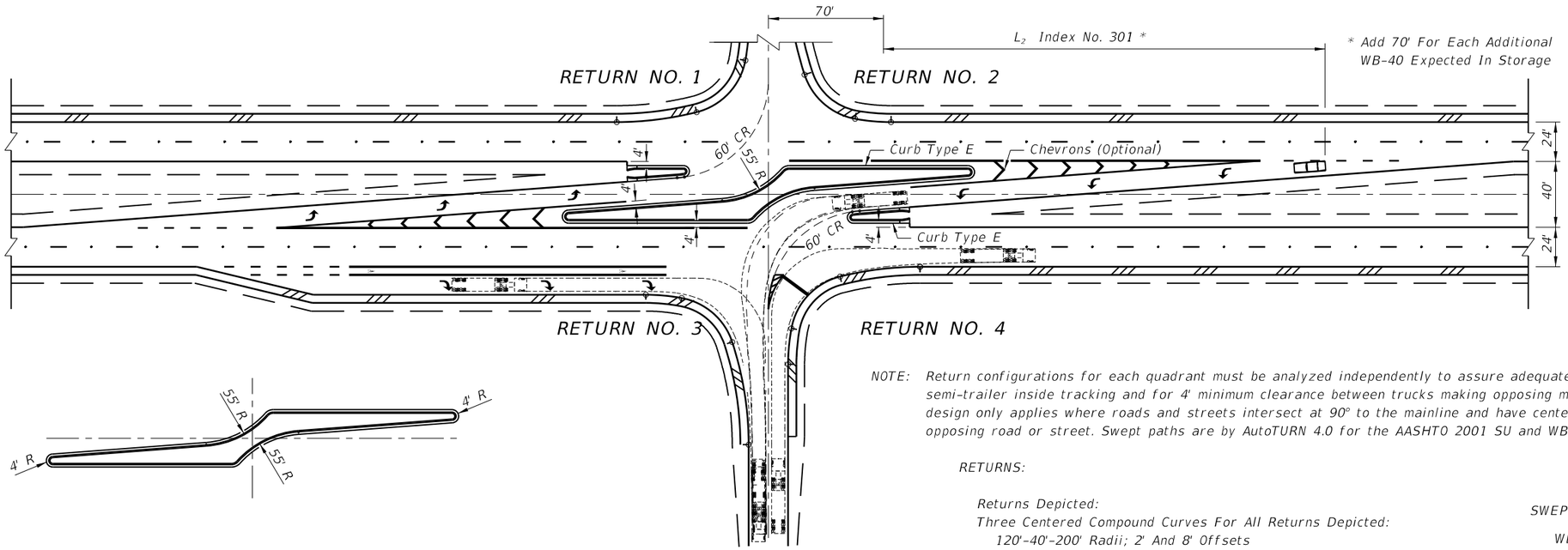

NOTE: Return configurations for each quadrant must be analyzed independently to assure adequate return pavement for semi-trailer inside tracking and for 4' minimum clearance between trucks making opposing movement. The depicted design only applies where roads and streets intersect at 90° to the mainline and have centerlines common with the opposing road or street. Swept paths are by AutoTURN 4.0 for the AASHTO 2001 SU and WB-40 tractor-semitrailer.

RETURNS:

Returns Depicted:
Three Centered Compound Curves For All Returns Depicted:
120'-40'-200' Radii; 2' And 8' Offsets
Simple Curve With Tapers Not Shown:
40' Radius; 1:15 And 1:8 Tapers With
2' And 8' Offsets Tested (Practical Fit)

SWEPT PATH LEGEND:

WB 40 ----------
SU – – – – –

QUADRANT NOS. 1 & 2 VACANT

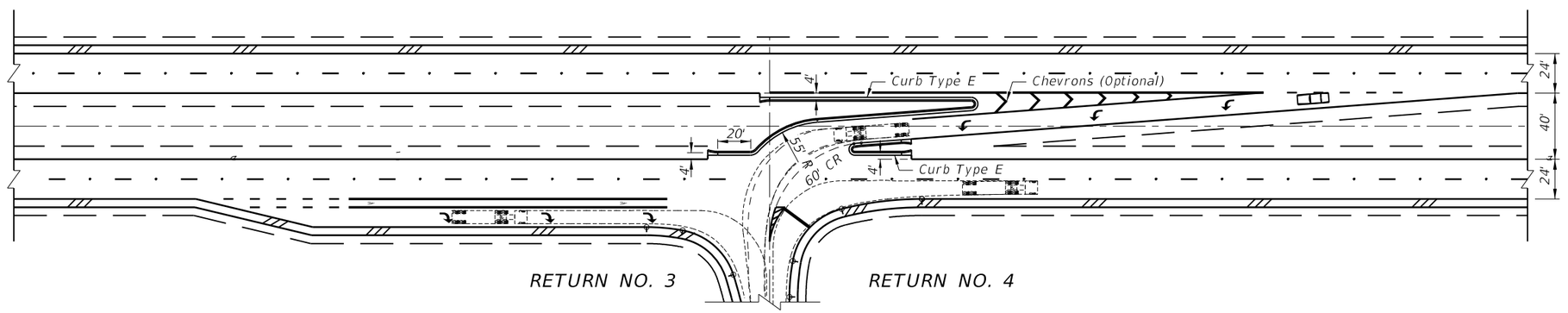

NOTE: Return configurations for each quadrant must be analyzed independently to assure adequate return pavement for semi-trailer inside tracking. The depicted design only applies where roads and streets intersect at 90° to the mainline. Swept paths are by AutoTURN 4.0 for the AASHTO 2001 SU and WB-40 tractor-semitrailer.

40' MEDIAN • 4-LANE DIVIDED • TAPERED TURN BAY • 2001 AASHTO SU & WB-40

C:\d_projects\standards\roadway\00500-s\00527-03.dgn
rd960rh
2:06:33 PM
6/28/2012

LAST REVISION	REVISION	DESCRIPTION:		FDOT DESIGN STANDARDS 2013	DIRECTIONAL MEDIAN OPENINGS	INDEX NO.	SHEET NO.
04						527	3

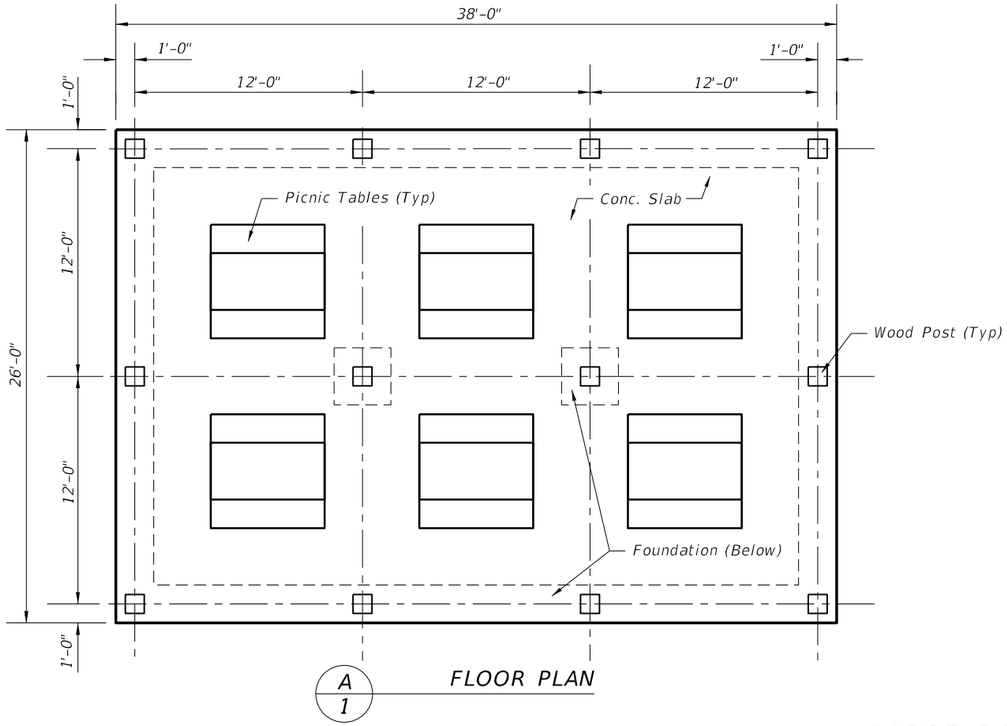

A/1 FLOOR PLAN

LARGE PAVILION

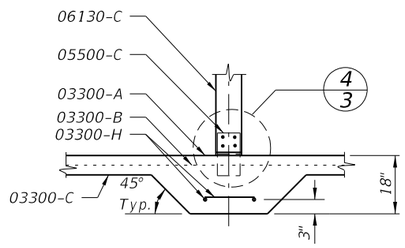

1/1 SECTION

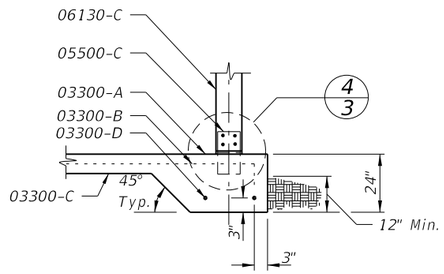

2/1 SECTION

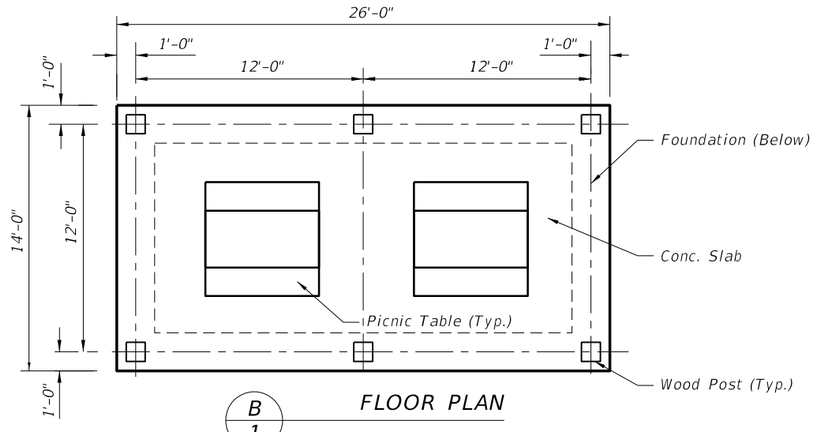

B/1 FLOOR PLAN

SMALL PAVILION

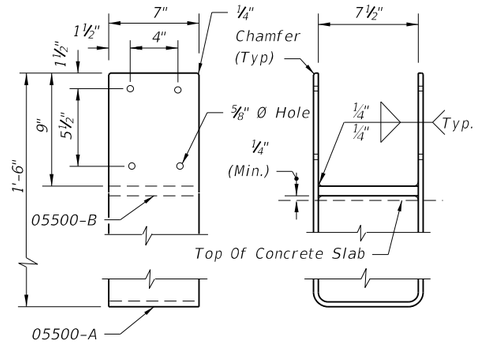

3/1 POST BASE DETAIL

NOTES

Keynotes on sheet 2.

FLOOR

6" reinf. concrete slab
w/ WWR 6x6-W1.4xW1.4

Drop footing at slab
perimeter & interior posts see keynotes.

Harden & broom finish slab surface.

STRUCTURE

Posts: 8 x 8 PT

Beams: 4 x 6 PT

Framing: 4x PT as described.

Misc members: 1x and 2x as described.

ROOF

3"x6" T&G wood decking.

30# asphalt impregnated fiberglass felt underlayment.

Standing seam metal roof (24 GA Steel or 0.032 Alum.) w/ Kynar 500 finish.

Structure, decking and roofing shall be designed to withstand 130 mph wind load.

BUILDING CODE

Picnic pavilions shall be constructed according to the requirements of the appropriate sections of the "Florida Building Code", current, adopted edition.

PICNIC TABLES

Picnic tables and benches shall be 6'x6' w/heavy galvanized pipe frames and recycled plastic wood seats and table tops. All tables shall be of walk thru design suitable for exterior locations. Pavilions shall meet the requirements of the Americans With Disabilities Act (ADA) accessibility guidelines. A minimum of 20% of picnic tables to meet ADA.

C:\d\projects\standards\roadway\00500-s\00530-01.dgn rd960rh 2:06:35 PM 6/28/2012

LAST REVISION	REVISION	DESCRIPTION:				
01/01/12			FDOT DESIGN STANDARDS 2013	REST AREA PAVILION	INDEX NO. 530	SHEET NO. 1

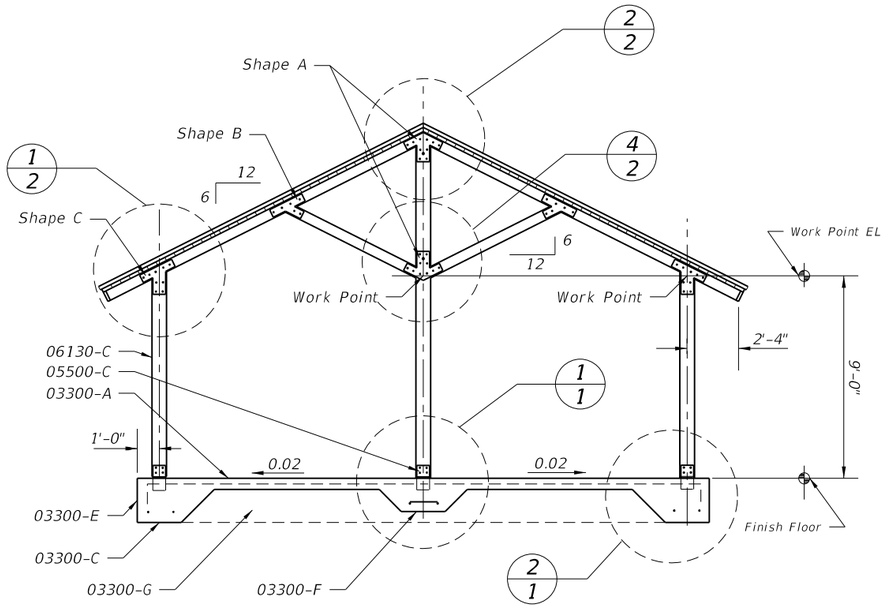

A/2 LARGE PAVILION SECTION

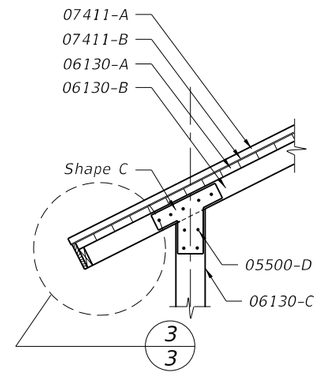

1/2 SECTION

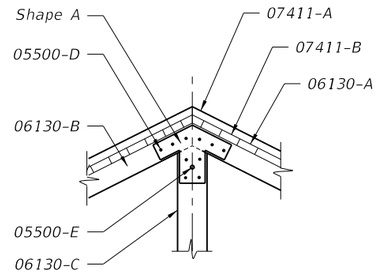

2/2 SECTION

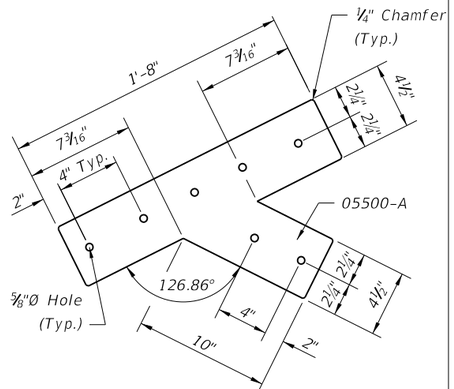

3/2 SHAPE B DETAIL

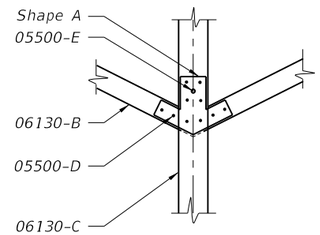

4/2 SECTION

KEYNOTES

03300-A	Class II 6" conc slab
03300-B	6"x6"-W1.4xW1.4 @ ℄ of slab
03300-C	6 mil vapor barrier
03300-D	#5 rebar cont. (2 required)
03300-E	24" cont. drop footing
03300-F	18"x18" drop footing
03300-G	6" min comp sand fill
03300-H	#5x18" rebar (4 required)
05500-A	3/8" galv. steel plate
05500-B	1/2" galv. steel plate
05500-C	post base.
05500-D	1/2" Ø bolt, washer & nut (typ.)
05500-E	3/4" Ø eyebolt, washer & nut for cross brace bars
05500-F	1/2" Ø steel rod w/turnbuckle
06130-A	3"x6" T&G wood decking
06130-B	4"x6" PT wood frame
06130-C	8"x8" PT wood post
06130-D	2"x6" PT wood sub fascia
06130-E	1"x10" PT wood fascia
06130-F	3/4" ± wood shim
07411-A	Standing seam metal roof
07411-B	Felt underlayment

Alternate Material Note: These structures are shown with timber frames and decking. Alternate materials (i.e., aluminum, steel, etc.) may be used when submittals are signed and sealed by a specialty engineer as per Section 5 of the Standard Specifications and when approved by the Engineer.

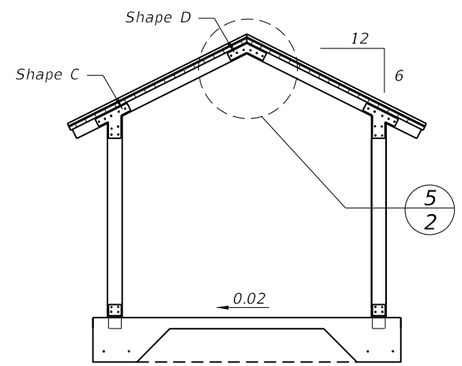

NOTE: DETAILS TO MATCH THOSE OF LARGE PICNIC PAVILION

B/2 SMALL PAVILION SECTION

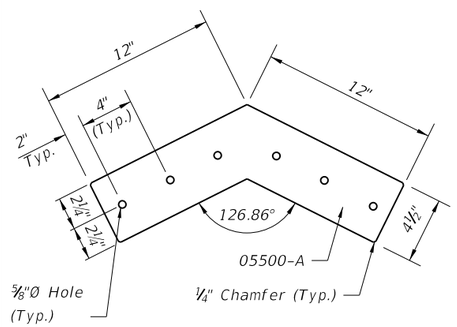

5/2 SHAPE D DETAIL

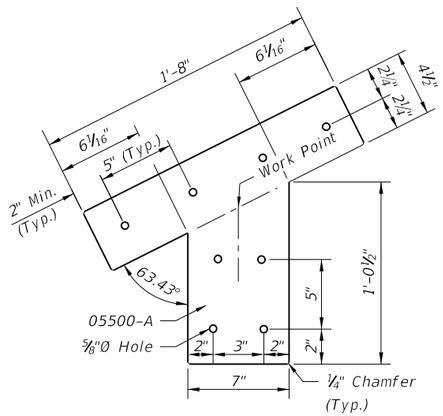

6/2 SHAPE C DETAIL

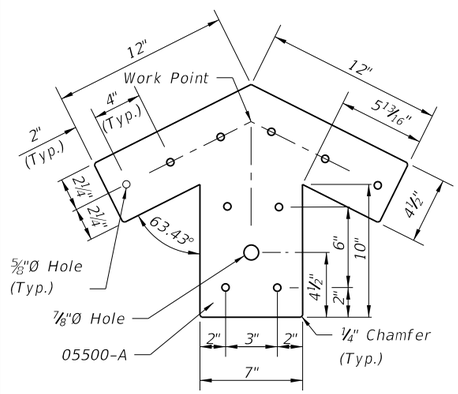

7/2 SHAPE A DETAIL

LAST REVISION	REVISION	DESCRIPTION:		FDOT DESIGN STANDARDS 2013	REST AREA PAVILION	INDEX NO.	SHEET NO.
01/01/12						530	2

C:\d_projects\standards\roadway\00500-s\00530-02.dgn
rd960rh
2:06:37 PM
6/28/2012

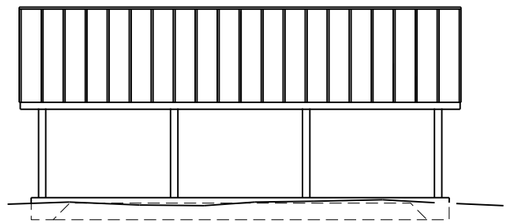

A/3 SIDE ELEVATION

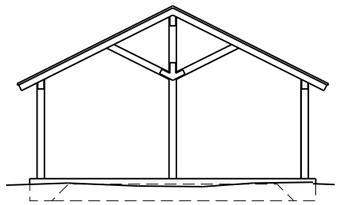

B/3 END ELEVATION

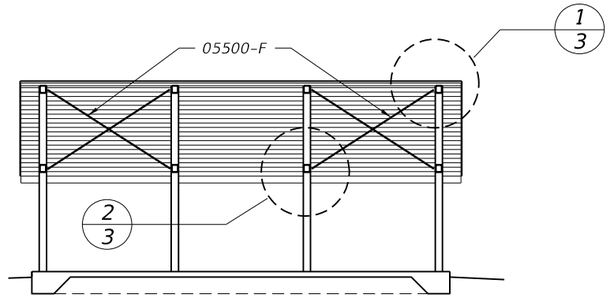

C/3 SECTION

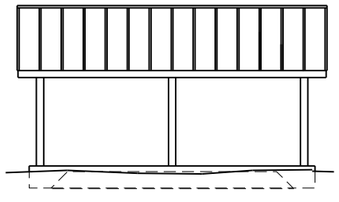

D/3 SIDE ELEVATION

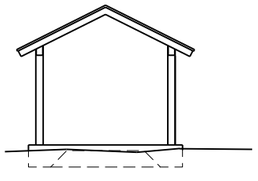

E/3 END ELEVATION

SPECIFICATIONS

Keynotes On Sheet 2.

CONCRETE

Concrete: FDOT Class II.

Reinforcing Bars: ASTM A615, Grade 60.

Welded Wire Fabric: ASTM A-185.

Vapor Barrier: Black 6-Mil Polyethylene.

STEEL

Galvanized Steel Plate: Steel Plate ASTM A36 or A709.

Provide galvanizing in accordance with the requirements of ASTM A123.

Galvanized Fasteners: High-Strength bolts and nuts, ASTM A325 in accordance with Specification Section 962.

Galvanize shapes after fabrication, make field repairs to galvanizing in accordance with Specification Section 562.

WOOD

Comply with American Institute For Timber Construction AITC 108, "Standard For Heavy Timber Construction."

For solid wood decking, comply with AITC 112, "Standard For Tongue And Groove Heavy Timber Standard."

Species: Douglas Fir, Hem-fir, or Southern Pine, at fabricator's option.

Preservative Treatment: Pressure treat fabricated members with waterborne solution for above ground use, complying with AWPA U1, category UC3B above ground exposed.

Wood Decking: Predrill decking at 30" centers for lateral spiking to adjacent units. Spikes to be 8" spikes galvanized common.

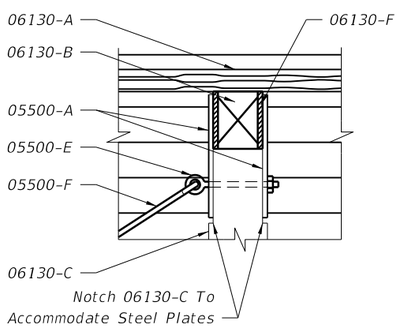

1/3 DETAIL

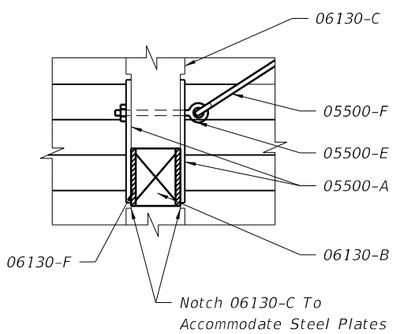

2/3 DETAIL

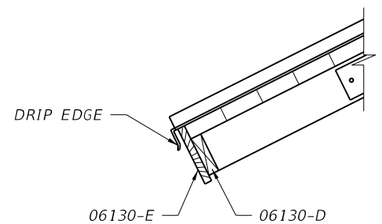

3/3 DETAIL
Similar At Roof Rake

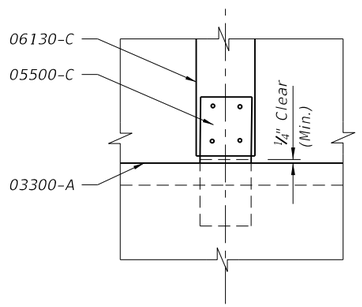

4/3 DETAIL

C:\d\projects\standards\roadway\00500-s\00530-03.dgn
rd960rh
2:06:39 PM
6/28/2012

LAST REVISION	REVISION	DESCRIPTION:			INDEX NO.	SHEET NO.
01/01/12			FDOT DESIGN STANDARDS 2013	REST AREA PAVILION	530	3

GENERAL NOTES

1. The location and construction of mailboxes shall conform to the rules and regulations of the United States Postal Service as modified by this design standard.

2. Mailboxes will not be permitted on Interstate highways, freeways, or other highways where prohibited by law or regulation.

3. The contractor shall give the Postmaster of the delivery route(s) written notice of project construction 7 days prior to the beginning of work, with Saturdays, Sundays and Holidays excluded.

   The Contractor shall furnish and install one mailbox in accordance with this design standard at each mail patron delivery location and maintain the box throughout the contract period. The Contractor shall apply box numbers to each patron box in accordance with identification specifications of the Domestics Mail Manual of the U. S. Postal Service; where local street names and house numbers are authorized by the Postmaster as a postal address, the Contractor shall inscribe the house number on the box; if the box is located on a different street from the patrons residence, the Contractor shall inscribe the street name and house number on the box.

   The Contractor shall coordinate removal of the patrons existing mailboxes. Immediately after installing the new mailboxes the Contractor must notify each "Mail Delivery Patron" by Certified Mail that removal of the existing mailboxes must be accomplished in 21 days after receipt of notices. Patrons shall have the option of removing their existing mailboxes or leaving the mailboxes in place for removal by the Contractor; removal by the Contractor shall be included in the contract unit price for Mailbox, Each. The Contractor shall dispose of mailboxes and supports in areas provided by him.

   Reuse of existing mailboxes by the Contractor will not be a requirement under any construction project; however where an existing mailbox meets the design requirements of this standard and is structurally and functionally sound, the Contractor at his option may elect to reuse the existing mailbox in lieu of constructing a new mailbox. Any use of existing mailboxes must be approved by the Engineer.

4. Mailboxes shall be light sheet metal or plastic construction, in traditional style only, and only in Size 1 as prescribed by the Domestic Mail Manual of the U. S. Postal Service (DMM).

   Mailbox production standards, lists of approved manufacturers and suppliers of mailboxes, design approval and guidance may be obtained by writing to the Rural Delivery Division, Delivery Service Department, Operations Group, USPS Headquarters, Washington, DC 20260.

5. Mailboxes shall be located on the right-hand side of the roadway in the direction of the delivery route, except on one-way roads and streets where they may be placed on the left-hand side.

   Mailboxes on rural highways shall be set with the roadside face of the box offset from the edge of the traveled way a minimum distance of the greater of the following:

   a. Shoulder width plus 8" to 12".

   b. 10' for ADT over 10,000 vpd.
      8' for ADT 100 to 10,000 vpd.
      6' for ADT under 100 vpd
      2'-6" for low speed and ADT under 100 vpd.

   When a mailbox is installed within the limits of guardrail it should be placed behind the guardrail whenever practical.

   Mailboxes on curbed highways, roads and streets shall be set with the face of the box between 6" and 12" back of the face of curb. If the sidewalk abuts the curb or if an unusual condition exists which makes it difficult or impractical to install or serve boxes at the curb, the Contractor with concurrence of the local postal authority may be permitted to install all mailboxes at the back edge of the sidewalk, where they can be served by the carrier from the sidewalk.

6. Mailboxes shall be set with the bottom of the box between 42" and 48" above the mail stop surface, unless the U.S. Postal Service establishes other height restrictions.

7. No more than two mailboxes may be mounted on a support structure unless the support structure and mailbox arrangements have been shown to be safe by crash testing in accordance with NCHRP Report 350.

   Neighborhood Delivery and Collection Box Units (NDCBU) are a specialized multiple mailbox installation that must be located outside the highway and street clear zones. The location of NDCBUs is the sole responsibility of the Postmaster for the delivery route under consideration.

8. Lightweight newspaper receptacles may be mounted below the mailbox on the side of the support post in conformance with the USPS Domestic Mail Manual. The mail patron shall be responsible for newspaper receptacle installation and maintenance.

9. Wood and steel support posts for both single and double mailbox mountings shall be embedded no more than 24" into the ground.

   Concrete, block, brick, stone or other rigid foundation structure or encasement, either above or below the shoulder groundline, will not be permitted for mailboxes on rural highways. On urban roads and streets where mailbox support posts are set within rigid pavement back of curb, the support posts shall be separated from the pavement by a minimum of 1" of expansion material.

   Support posts shall not be fitted nor installed with surface mount base plates.

10. At driveway entrances mailboxes shall be placed on the far side of the driveway in the direction of the delivery route.

    At intersecting roads mailboxes shall be located 100' or more from the centerline of the intersecting road on the far side in the direction of the delivery route, with the distance increased to 200' when the route volume exceeds 400 vehicles per day.

11. Wood support posts shall be in conformance with the material and dimensional requirements of Section 952 and the treatment requirements of Section 955 of the Standard Specifications.

    Steel support posts shall have an external finish equal to or better than two coats of weather resistant, air dried or baked, paint or enamel. Surface(s) shall be cleaned of all loose scale prior to finishing. The Postal Service prefers that posts be painted white, but other colors may be used when approved by the Engineer. When galvanized posts are used painting is not required.

    Mounting brackets, plates, platforms, shelfs and accessory hardware surface finishes are to be suited to support post finish.

12. Mailboxes shall be paid for under the contract unit price for Mailboxes, Each. Payment shall be full compensation for boxes, posts and accessory items essential for installation in accordance with this standard; erection; adjustments to suit construction needs; and, for identification letters and numbers.

    Payment shall be limited to one mailbox per patron address whether the mailbox is new, reused, salvaged, reset or relocated. Payment shall be per mailbox regardless of the number of mailboxes per support or grouping arrangement.

    The above compensation shall include any work and cost incurred by the contractor for removal and disposal of existing mailboxes.

    There shall be no payment participation for NDCBU furnishing, assembly, installation, resetting or relocation.

6/28/2012 2:06:41 PM rd960rh C:\d\projects\standards\roadway\00500-s\00532-01.dgn

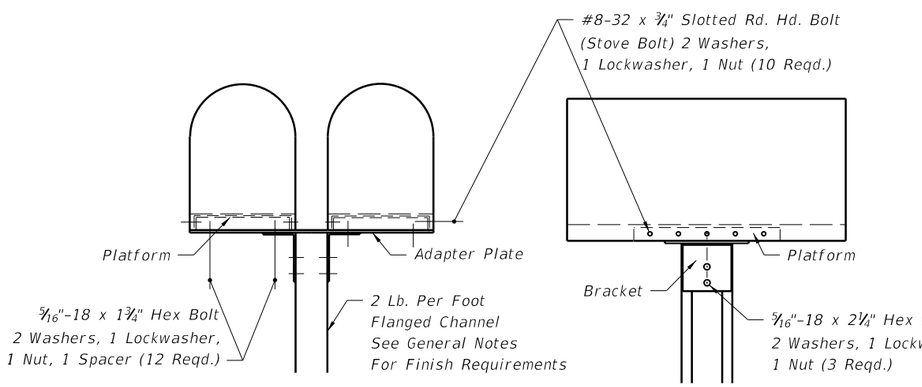

FRONT VIEW SIDE VIEW

FLANGED CHANNEL

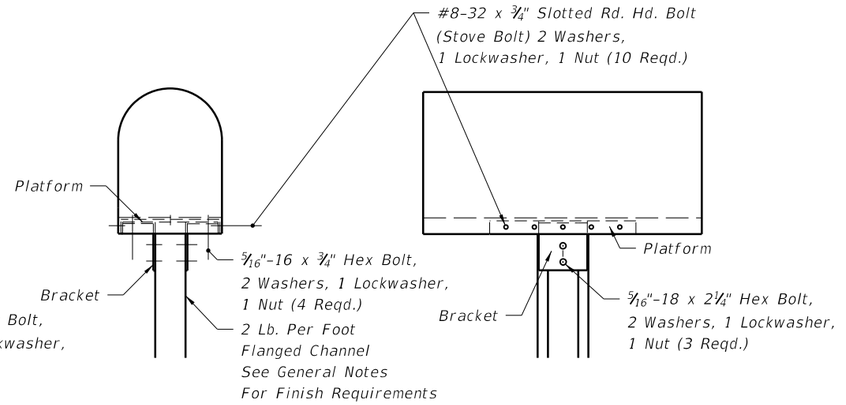

FRONT VIEW SIDE VIEW

FLANGED CHANNEL

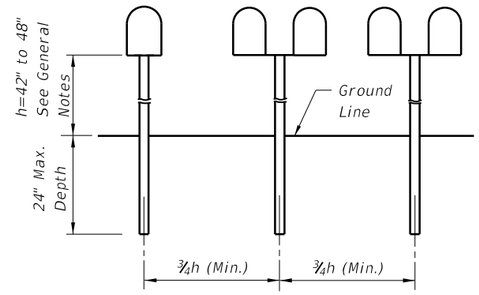

ELEVATION

SINGLE OR COMBINED WOOD, FLANGED CHANNEL
OR PIPE POST TYPES SHOWN ON THIS INDEX

POST SPACING

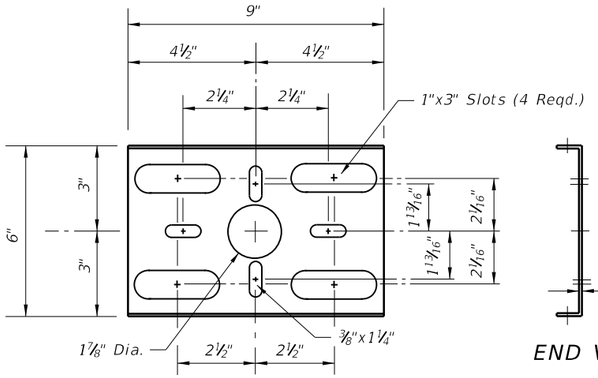

BOTTOM VIEW

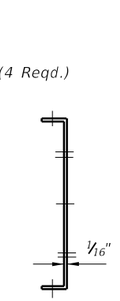

END VIEW

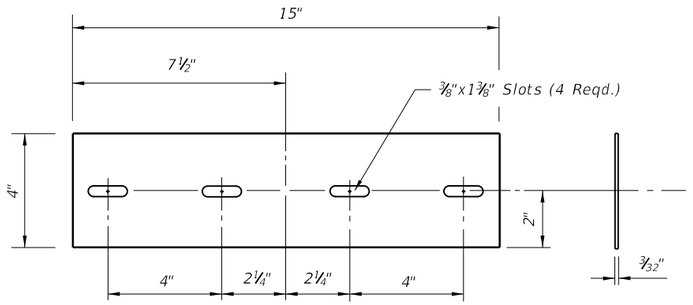

TOP VIEW END VIEW

STEEL ADAPTER PLATE

Note: See General Notes for finish requirements.

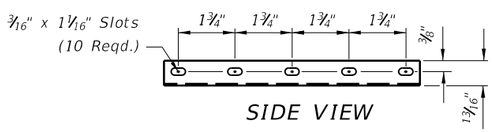

SIDE VIEW

STEEL PLATFORM

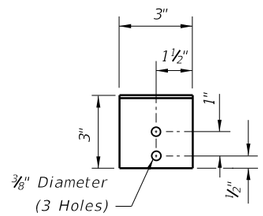

FRONT VIEW

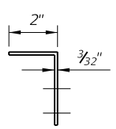

END VIEW

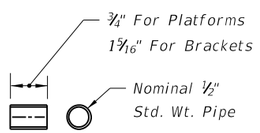

STEEL SPACER

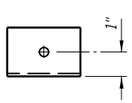

TOP VIEW

STEEL BRACKET

STEEL FLANGED CHANNEL SUPPORT POSTS

C:\d\projects\standards\roadway\00500-s\00532-02.dgn
rd960rh
2:06:43 PM
6/28/2012

LAST REVISION	REVISION	DESCRIPTION:		FDOT DESIGN STANDARDS 2013	MAILBOXES	INDEX NO.	SHEET NO.
00						532	2

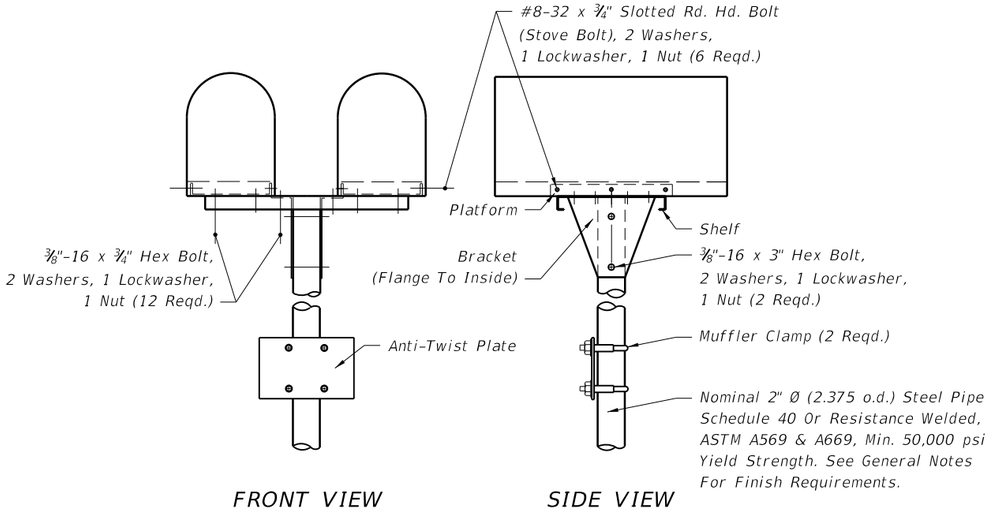

FRONT VIEW SIDE VIEW

2" Ø PIPE POST

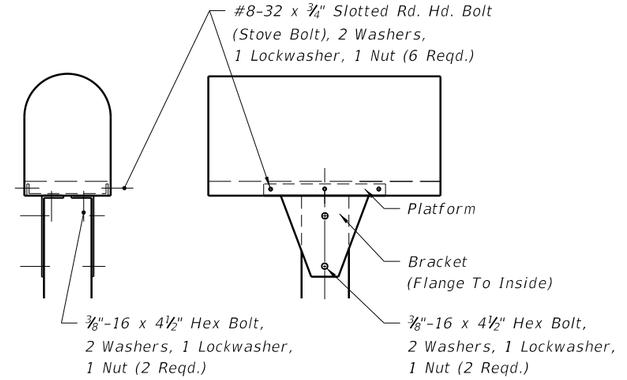

FRONT VIEW SIDE VIEW

4" X 4" WOOD POST

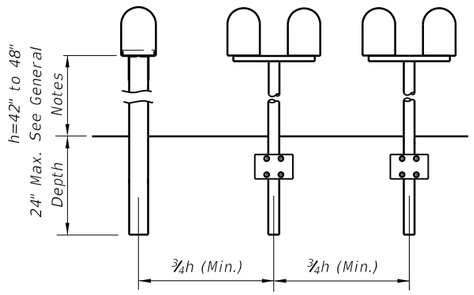

SINGLE OR COMBINED WOOD, FLANGED CHANNEL
OR PIPE POST TYPES SHOWN ON THIS INDEX

ELEVATION
POST SPACING

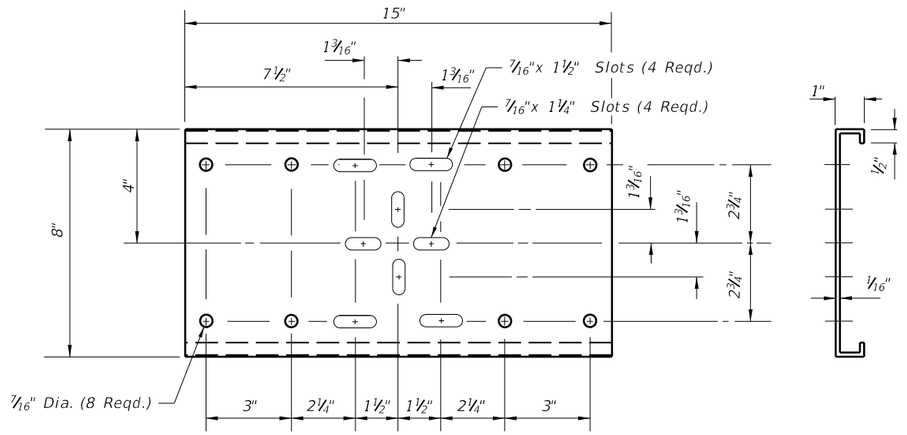

TOP VIEW END VIEW

STEEL SHELF

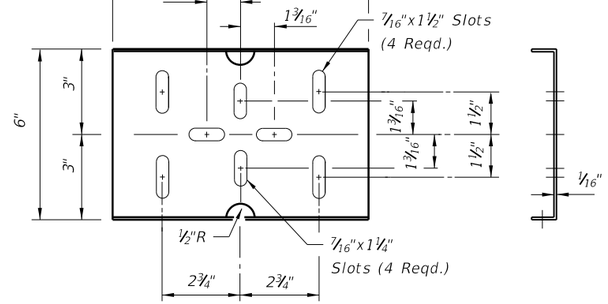

BOTTOM VIEW END VIEW

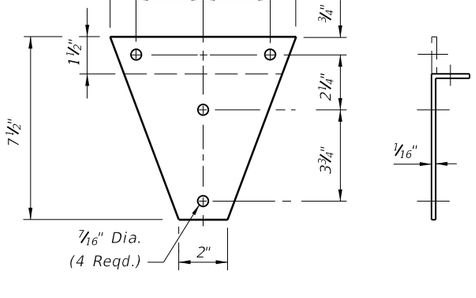

SIDE VIEW END VIEW

STEEL BRACKET

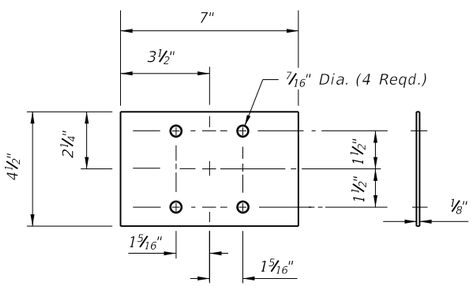

FRONT VIEW END VIEW

STEEL ANTI-TWIST PLATE

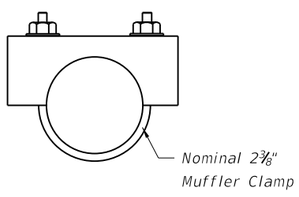

TOP VIEW

STEEL CLAMP

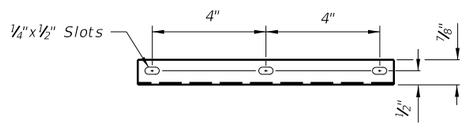

SIDE VIEW

STEEL PLATFORM

STEEL PIPE AND WOOD SUPPORT POSTS

Note: See General Notes for finish requirements

LAST REVISION	REVISION	DESCRIPTION:			INDEX NO.	SHEET NO.
00			FDOT DESIGN STANDARDS 2013	MAILBOXES	532	3

C:\d\projects\standards\roadway\00500-s\00532-03.dgn rd960rh 2:06:45 PM 6/28/2012

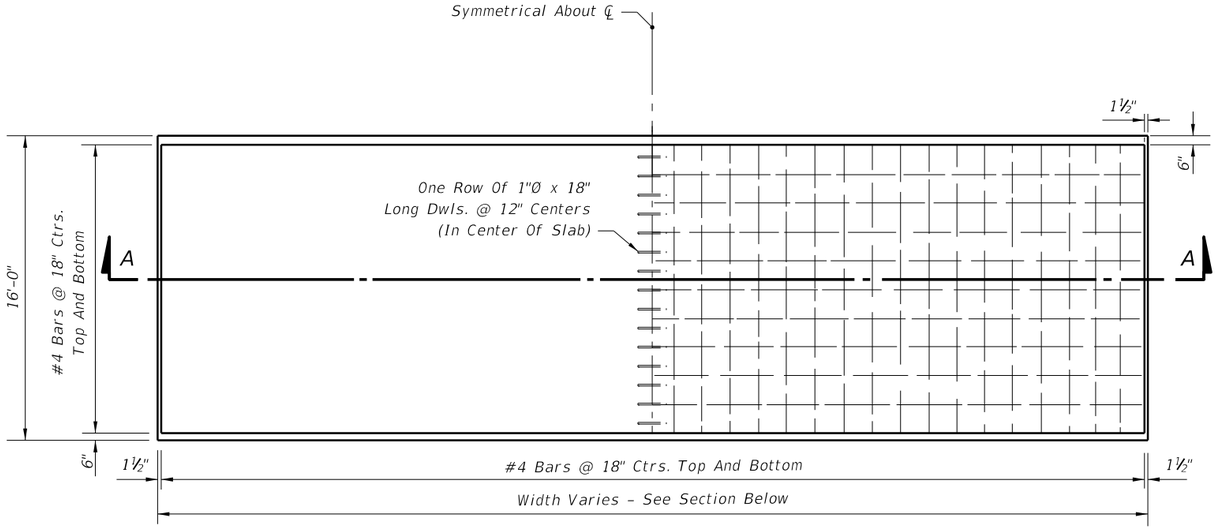

PLAN

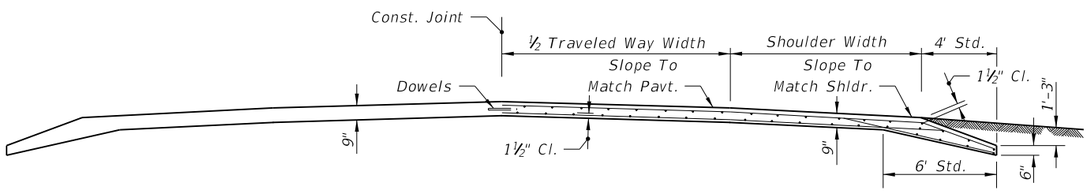

SECTION AA

Note: Class I concrete is to be used unless otherwise noted in plans or special provisions.

REINFORCED CONCRETE

TYPE A

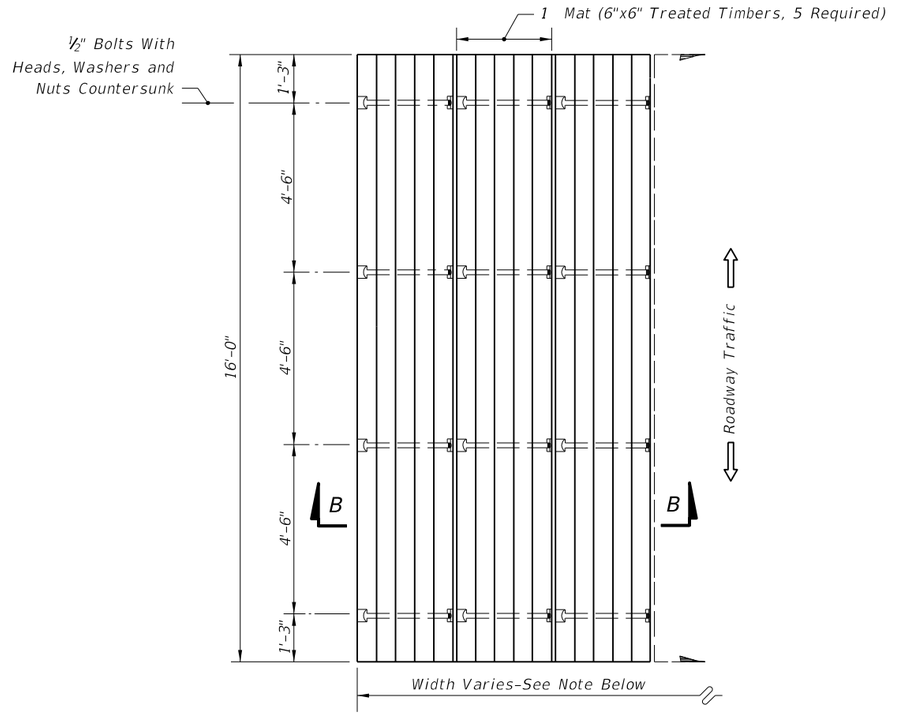

PLAN

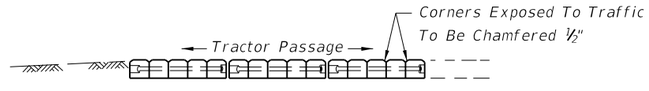

SECTION BB

Note: Tractor crossing to be constructed to match pavement cross slope.

The number of mats required will vary with the pavement width. A sufficient number of mats will be used so that the tractor crossing will extend a minimum of four feet (4') beyond roadway shoulders.

TREATED TIMBER

TYPE B

GENERAL NOTES

1. Tractor crossing shall be paid for under the contract unit price for Tractor Crossing, EA.

TRACTOR CROSSINGS

LAST REVISION	REVISION	DESCRIPTION:		FDOT DESIGN STANDARDS 2013	TRACTOR CROSSINGS	INDEX NO.	SHEET NO.
00						535	1

6/28/2012 2:06:47 PM rd960rh C:\d\projects\standards\roadway\00500-s\00535-01.dgn

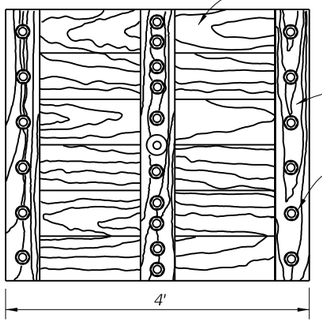

PLAN
TIMBER PLATE

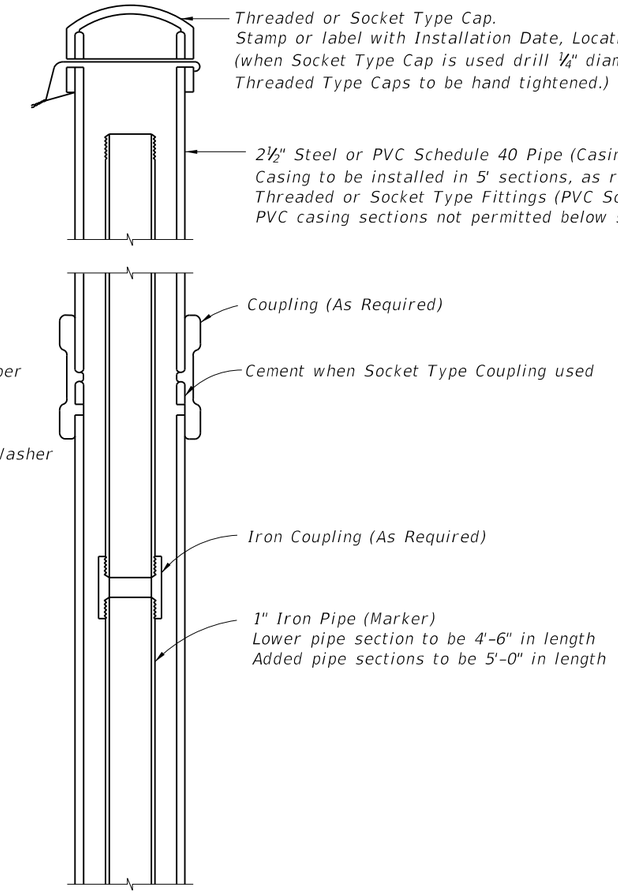

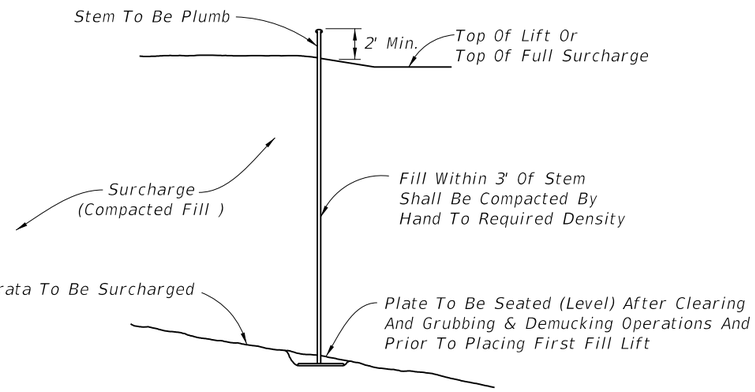

INSTALLATION

NOTES:

1. Elevation of the top of each length of marker pipe shall be determined as soon as it is installed and also immediately before the next length of marker pipe is added.
2. Settlement plate locations shall be flagged and protected from construction vehicles and equipment. If settlement plates are disturbed, they shall be replaced in kind.
3. Oakum used to construct seal should not have a mesh covering (plastic or other synthetic material).
4. The settlement plates shall be paid for under the contract unit price for Settlement Plate Assembly, AS.

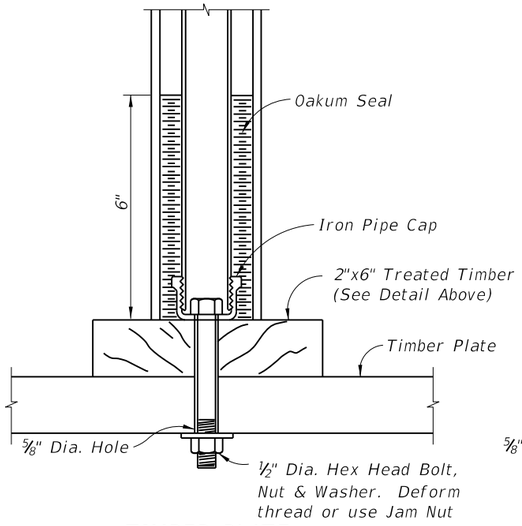

TIMBER PLATE

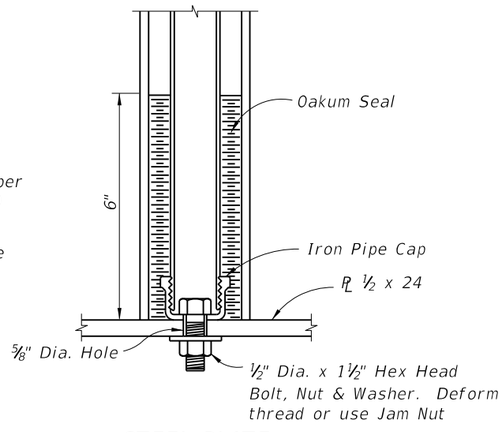

STEEL PLATE

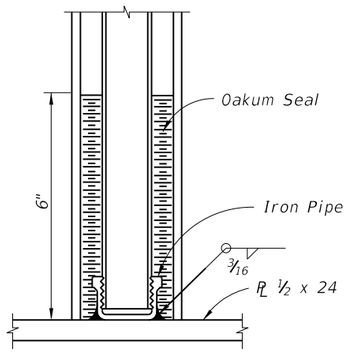

STEEL PLATE

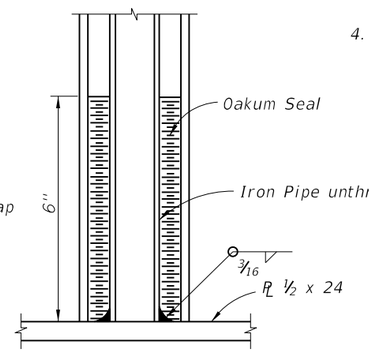

STEEL PLATE

STEM AND PLATE OPTIONS

LAST REVISION	REVISION	DESCRIPTION:			INDEX NO.	SHEET NO.
01/01/00			FDOT DESIGN STANDARDS 2013	SETTLEMENT PLATE	540	1

6/28/2012 2:06:49 PM rd960rh C:\d\projects\standards\structures\2013book\00540-1of1.dgn

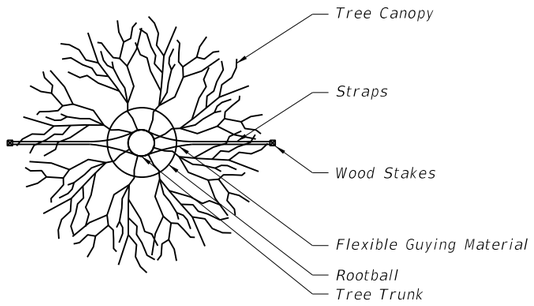

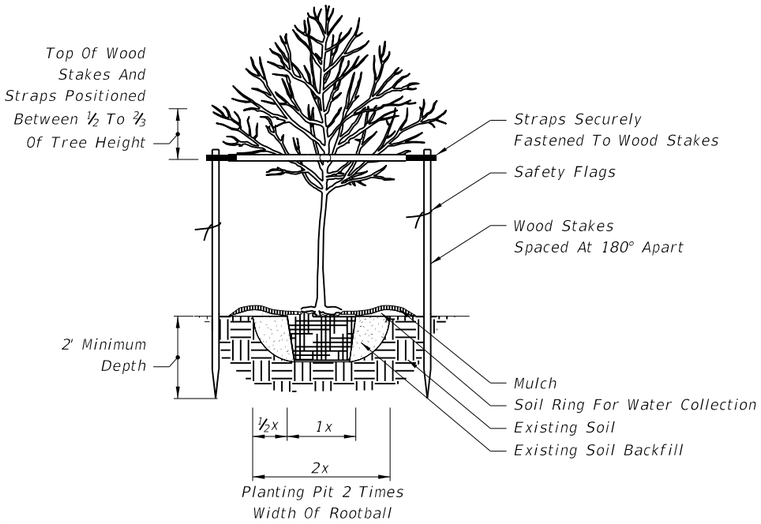

1" - 3 1/2 " CALIPER TREE PLANTING

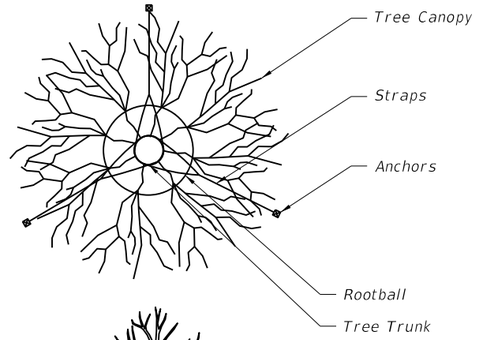

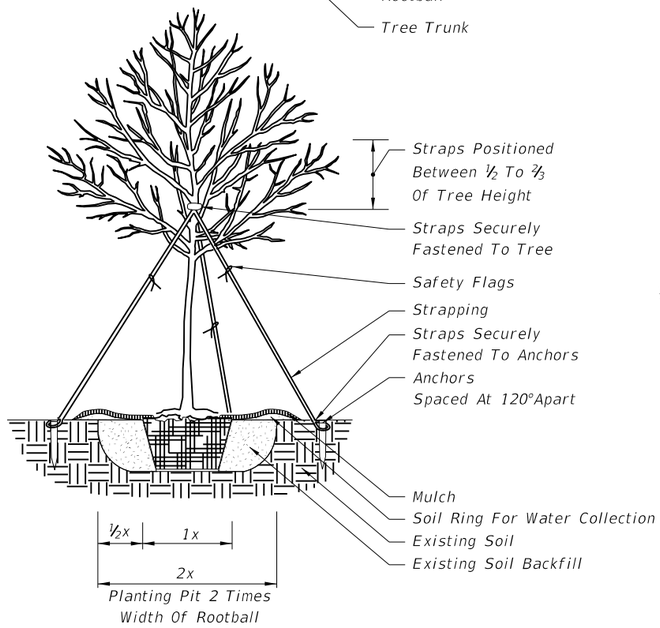

4" AND LARGER CALIPER TREE PLANTING

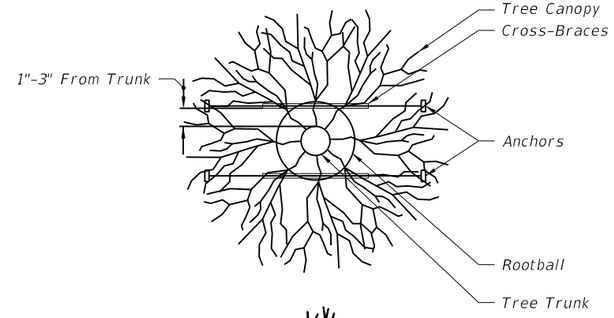

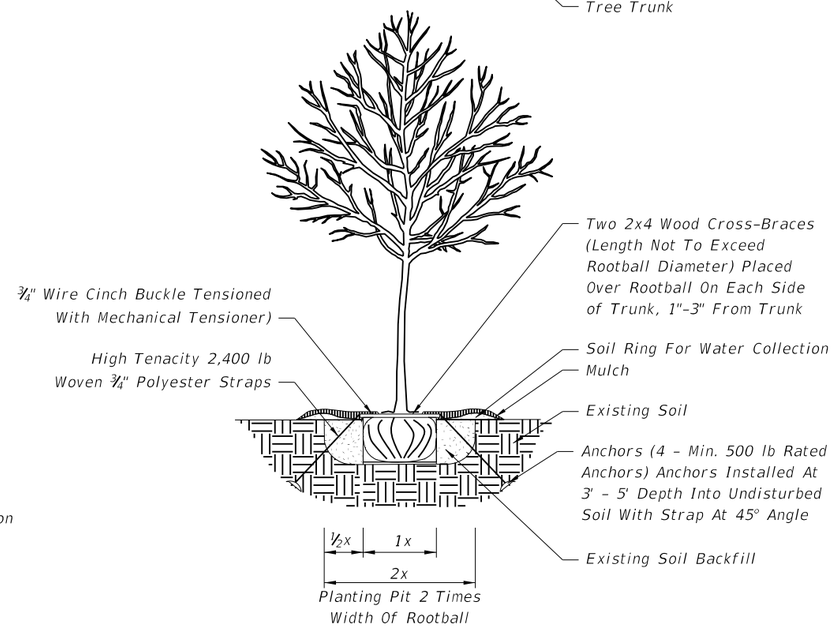

1" - 3½" CALIPER TREE PLANTING WITH UNDERGROUND BRACING

GENERAL NOTES:

1. All dimensions 6" and less are exaggerated for illustrative purposes only.
2. Plant containers shall be removed prior to planting. If plants are not container grown, remove a minimum of the top ⅓ of burlap, fabric, or wire mesh. Never lift or handle the tree by the trunk.
3. The uppermost root on all trees shall be covered by less than 1" of soil. Use hand tools to carefully remove all excess soil. The top of root ball shall be set 1"–2" above finish grade and set plumb to the horizon. If planting pit is too deep, remove the tree and firmly pack additional soil in the bottom of the planting pit to raise the rootball. After positioning the tree in the planting pit, slice through rootballs with 3 or 4 vertical slices (top to bottom) equally distributed around the tree.
4. Backfill shall be loosened existing soil. Remove rocks, sticks, or other deleterious material greater than 1" in any direction prior to backfilling. Water and tamp to remove air pockets. If existing soils contain excessive sand, clay, or other material not conducive to proper plant growth, contact Engineer prior to planting.
5. Soil rings shall be constructed of existing soil at the outer edge of the planting pit, with a height of 3" and gently sloping sides. Do not pile soil on top of rootball.
6. Mulch shall be a 3" deep layer placed to the edge of the trunk flare, around the base of shrub, or solidly around groundcover. Never pile mulch against the tree trunk.
7. Straps shall be minimum 1" wide nylon or polypropylene. All wood stakes or anchors shall be located beyond the edge of soil ring and located below finished grade, unless otherwise specified.
8. Sabal Palms may be hurricane cut. All other palms must have fronds tied with biodegradable twine. Palm trunks shall have no burn marks, scars, or sanding.
9. All dimensions provided for wood materials are nominal.
10. When a permanent, subsurface, or drip irrigation system is provided, a soil ring is not required. Mulch to edge of planting pit.
11. Alternate tree bracing and guying systems approved by the Engineer may be used in lieu of the tree bracing and guying methods detailed on the Index. Alternate tree protection systems approved by the Engineer may be used in lieu of the tree protection barricade detailed on the index.
12. Remove aboveground guying systems at the end of the establishment period.

C:\d\projects\standards\landscp\00500-s\00544-01.dgn
rd960rh
2:06:51 PM
6/28/2012

LAST REVISION	REVISION	DESCRIPTION:			INDEX NO.	SHEET NO.
07/01/07			FDOT DESIGN STANDARDS 2013	LANDSCAPE INSTALLATION	544	1

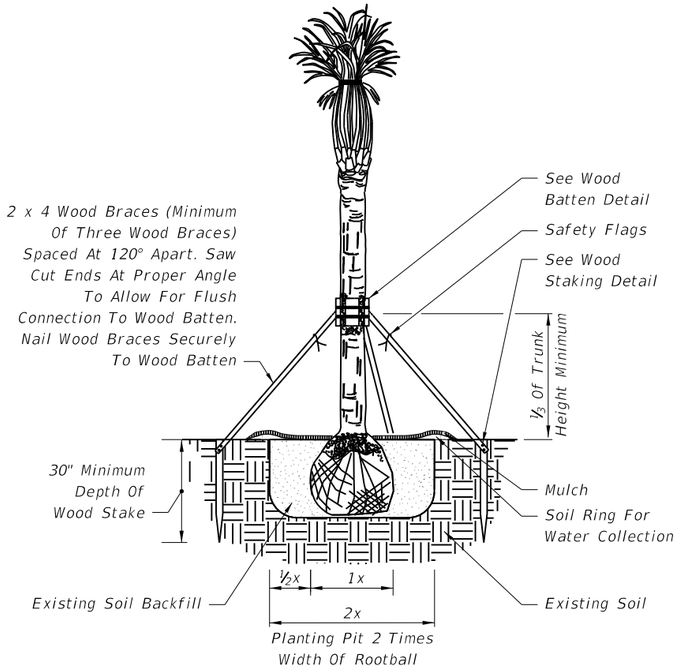

NOTE: For All Other Palms, Use Detail Provided By Landscape Architect In Contract Plans.

CABBAGE PALM PLANTING FOR UP TO 24' CLEAR TRUNK

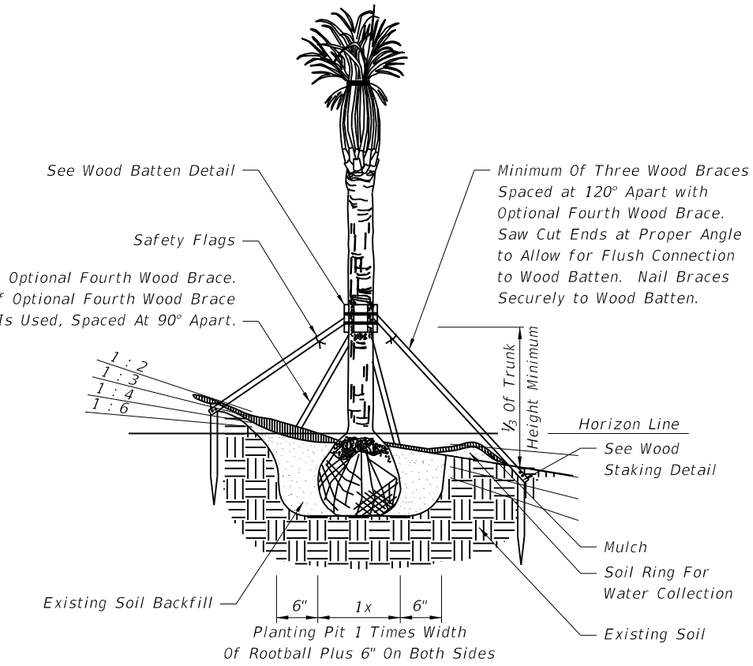

NOTES: Slope Provided As Rise:Run. For All Other Palms, Use Detail Provided By Landscape Architect In Contract Plans.

CABBAGE PALM PLANTING ON SLOPE FOR UP TO 24' CLEAR TRUNK

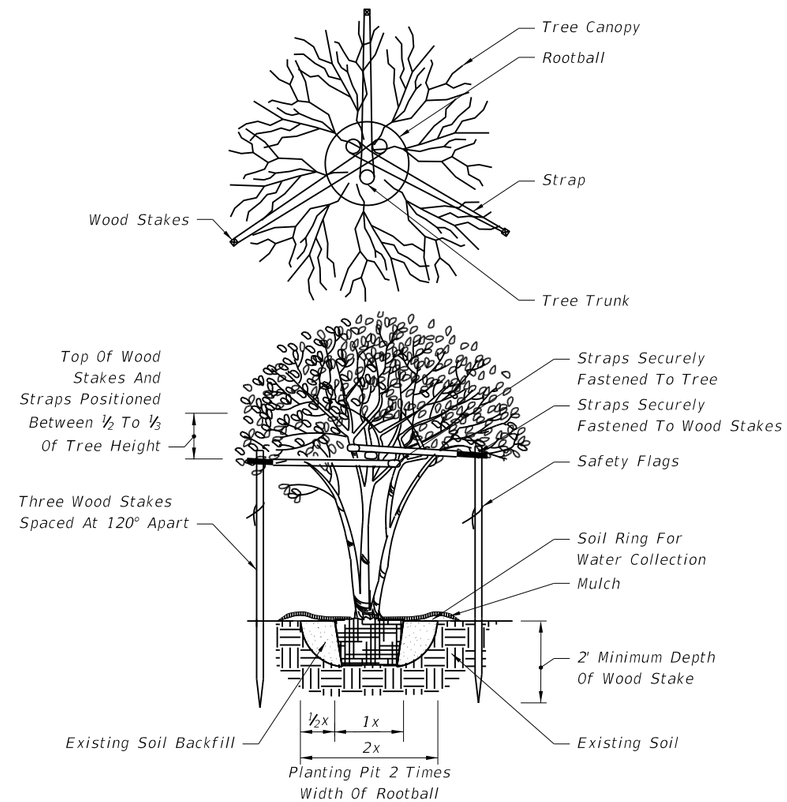

MULTI-TRUNK TREE PLANTING

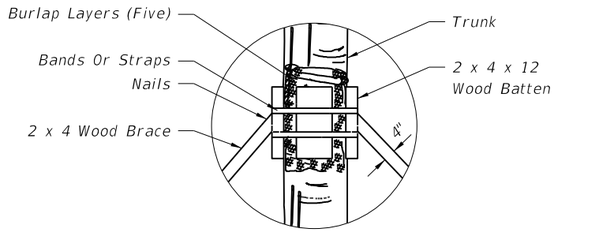

WOOD BATTEN DETAIL

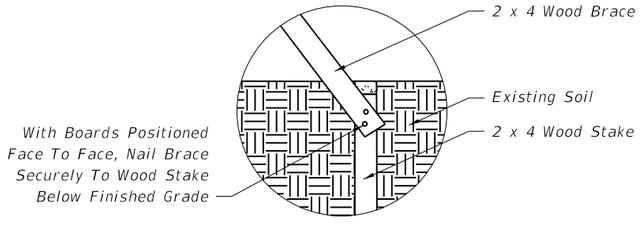

NOTE: Stake Into Firm, Existing Soil.

WOOD STAKING DETAIL

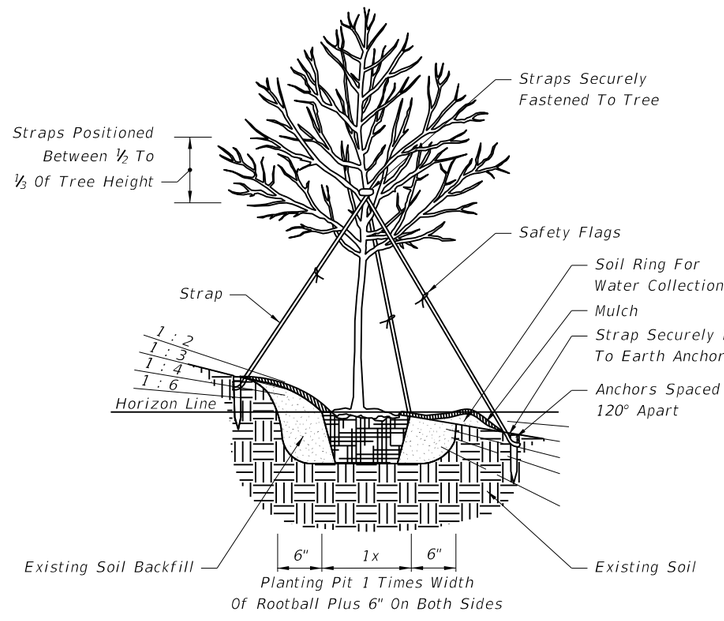

NOTE: Slope Provided As Rise:Run.

4" AND LARGER CALIPER TREE PLANTING ON SLOPE

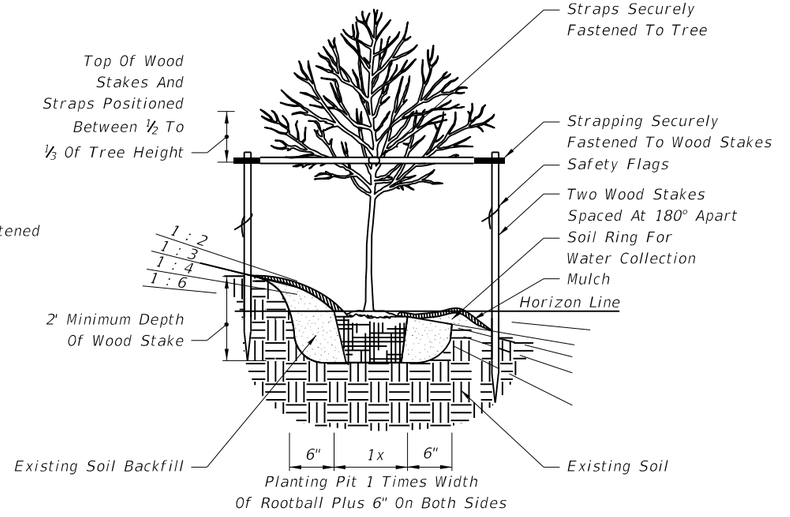

NOTE: Slope Provided As Rise:Run.

1" - 3 1/2 " CALIPER TREE PLANTING ON SLOPE

C:\d\projects\standards\landscp\00500-s\00544-02.dgn rd960rh 2:06:53 PM 6/28/2012

LAST REVISION	REVISION	DESCRIPTION:			INDEX NO.	SHEET NO.
07/01/07			FDOT DESIGN STANDARDS 2013	LANDSCAPE INSTALLATION	544	2

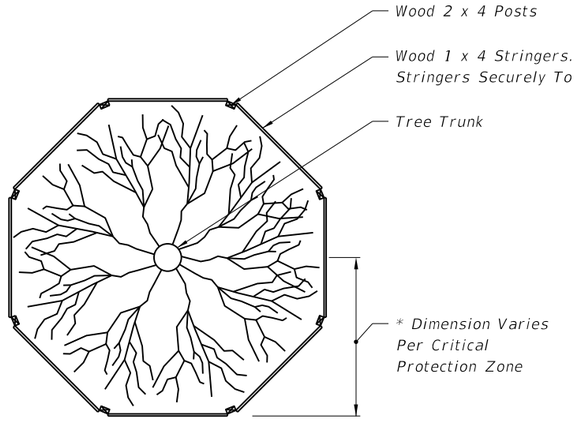

NOTE: For Groups Of Trees, Place Barricades Between Trees And Construction Activity.

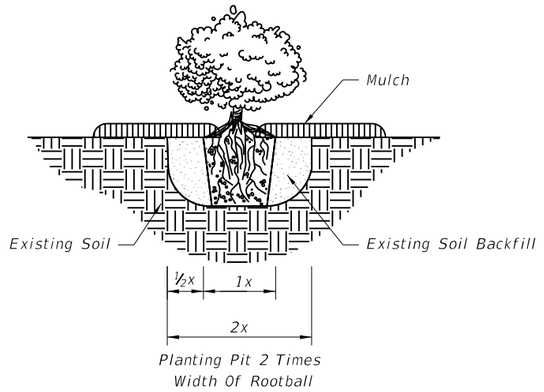

GROUND COVER/SHRUB PLANTING

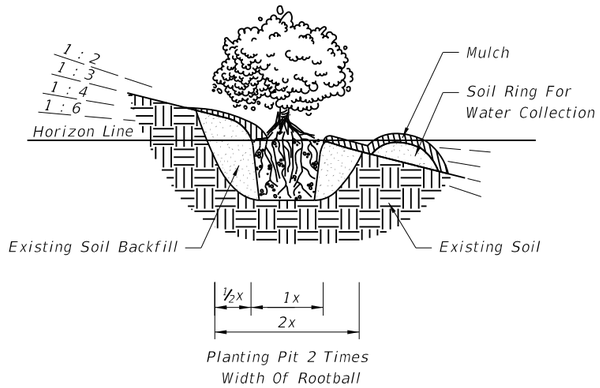

NOTE: Slope Provided As Rise:Run.

GROUND COVER/SHRUB PLANTING ON SLOPE

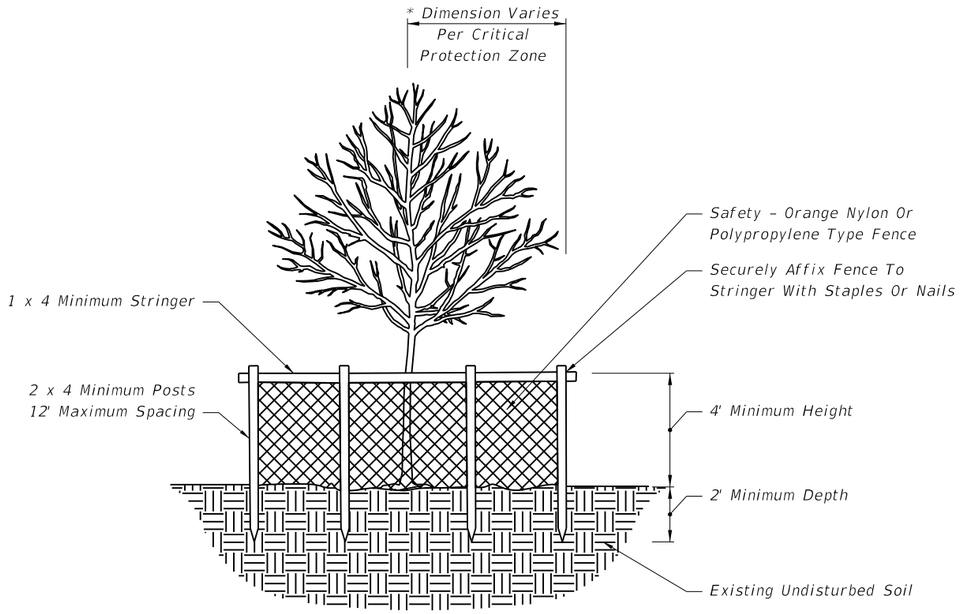

NOTES: Critical Protection Zone: The Area Surrounding A Tree Within A Circle Described By A Radius Of One Foot For Each Inch Of The Tree Trunk Diameter At 54" Above Finished Grade. For Groups Of Trees, Place Barricades Between Trees And Construction Activity.

* Tree Protection Barricades Shall Be Located To Protect A Minimum Of 75% Of The Critical Protection Zone.

TREE PROTECTION BARRICADE

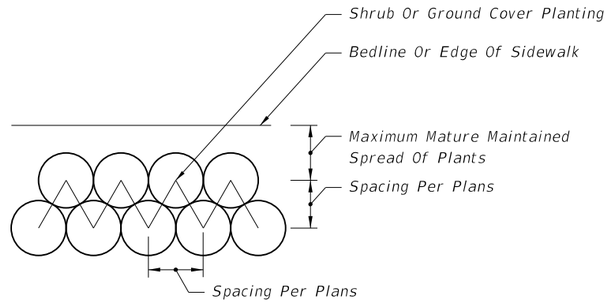

GROUND COVER/SHRUB LAYOUT DETAIL

C:\d\projects\standards\landscp\00500-s\00544-03.dgn
rd960rh
2:06:56 PM
6/28/2012

LAST REVISION	REVISION	DESCRIPTION:			INDEX NO.	SHEET NO.
07/01/07			FDOT DESIGN STANDARDS 2013	LANDSCAPE INSTALLATION	544	3

DESIGN NOTES

1. The information shown on this index is intended solely for the purpose of clear sight development and maintenance at intersecting highways, roads and streets, and is not intended to be used to establish roadway and roadside safety except as related to clear sight corridors. An analysis of sight distance shall be documented for all intersections.

2. Details are based on the AASHTO 'A Policy On Geometric Design Of Highways And Streets, 2001', CHAPTER 9, INTERSECTION SIGHT DISTANCE, CASES B and F, and Department practices for channelized median openings (left turns from major roadways).

3. The minimum driver eye setback of 14.5' from the edge of the traveled way may be adjusted on any intersection leg only when justified by a documented, site specific field study of vehicle stopping position and driver eye position.

4. For SIGNALIZED INTERSECTIONS sight distances should be developed based on AASHTO 'Case D–Intersections With Traffic Signal Control'. 'At signalized intersections, the first vehicle stopped on one approach should be visible to the driver of the first vehicle stopped on each of the other approaches. Left– turning vehicles should have sufficient sight distance to select gaps in oncoming traffic and complete left turns. Apart from these sight conditions, there are generally no other approach or departure sight triangles needed for signalized intersections. However, if the traffic signal is to be placed on two –way flashing operation (i.e. flashing yellow on the major –road approaches and flashing red on the minor –road approaches) under off– peak or nighttime conditions, then the appropriate departure sight triangles for Case B, both to the left and to the right, should be provided for the minor –road approaches. In addition, if right turns on a red signal are to be permitted from any approach, then the appropriate departure sight triangle to the left for Case B2 should be provided to accommodate right turns from that approach.'

5. Where curvature, superelevation, adverse split profiles or other conditions preclude the use of standard tree sizes and spacing, proof of view and shadowing restraints must be documented and the size and location of trees in medians detailed in the plans.

6. Intersection sight distance values are provided for Passenger Vehicles, SU Vehicles and Combination Vehicles. Intersection sight distance based on the Passenger Vehicle is suitable for most intersections. Where substantial volumes of heavy vehicles enter the major –road, such as from ramp terminals with stop control or roadways serving truck terminals, the use of tabulated values for SU Vehicles or Combination Vehicles should be considered.

GENERAL NOTES

1. Details apply to both rural and urban intersections under stop sign control or flashing beacon control. For full signal controlled intersections see Design Note No 4. At intersections listed in the Department's High Crash Intersection Report, designers shall give attention to keeping to a minimum, objects that distract or affect sight distance.

2. Sight distance 'd' applies to normal and skewed intersections (intersecting angles between 60° and 120°), and where vertical and/or horizontal curves are not present. Sight distance 'd' is measured along the major roadway from the center of the entrance lane of the minor roadway to the center of the near approach lane (right or left) of the major roadway. Distances 'd_L' and 'd_r' are measured from the centerline of the entrance lane of the minor roadway to a point on the edge of the near side outer traffic lane on the major roadway. Distance 'd_m' is measured from the centerline of the entrance lane of the minor roadway to a point on the median clear zone limit or horizontal clearance limit for the far side roadway of the major roadway.

3. A. The limits of clear sight define a corridor throughout which a clear sight window must be preserved. See WINDOW DETAIL, Sheet 2.

   B. Clear sight must be provided between vehicles at intersection stop locations, and vehicles on the major roadway within dimension 'd'.

   C. Since observations are made in both directions along the line of sight, the reference datum between roadways is 3'–6" above respective pavements.

4. Barrier systems within intersection sight corridors, where penetration into the sight window might occur, shall be located to provide the least adverse affect practical.

5. The corridor defined by the limits of clear sight is a restricted planting area. Drivers of vehicles on the intersecting roadway and vehicles on the major roadway must be able to see each other clearly throughout the limits of 'd' and 'd_a'. If in the Engineers judgement, landscaping interferes with the line of sight corridor prescribed by these standards the Engineer may rearrange, relocate or eliminate plantings. Plants within the restricted areas are limited to selections as follows:

5. (Cont.)
   Ground Cover & Trunked Plants (Separate or Combined):

   Ground Covers – Plant selection of low growing vegetation which at maturity does not attain a height greater than 18" below the sight line datum. For ground cover in combination with trees and palms; the following heights below the sight line datum will apply:

   24" for trees and palms ≤ 11" dia.; and, 18" for sabal palms >11" but ≤ 18" dia. (dia.–within Sight Window).

   Trunked Plants – Plant selection of a mature trunk diameter 4" or less measured at 6" above the ground. Canopy or high borne foliage shall never be lower than 5' above the sight line datum. These selections shall be spaced no closer than 20'.

   Trees – Trees can be installed with sod; pavers; gravel, mulch; ground covers or other Department approved material. The clear sight window must be in conformance with the 'WINDOW DETAIL' modified to attain the height requirements listed in 'Ground Covers' above.

   A. Size and spacing shall conform to the Tree Spacing Table.

   B. Requirements for placement within medians at median openings and at unsignalized and signalized intersections:

      a. Horizontal clearance for the mature specimen shall be maintained as specified in Index 700. Specimens whose mature trunk diameter is greater than 18 inches shall not be permitted,

      b. Where left turns from the major road are permitted, no trees shall be located within the distance 'd_b', Sheet 2 of 6; and not less than the distances called for in (c) or (d), as applicable,

      c. For safety, these additional setbacks are required:

         1. Where no left turn lane is present, size and spacing shall conform to the Tree Spacing Table. No trees shall be permitted within 100' of the restricted median nose (measured from the edge of pavement),

         2. Where left turn lane(s) are present, the following requirements apply:

            - For low speed facilities (design speed less than 50 mph), size and spacing shall conform to the Tree Spacing Table. No trees shall be permitted within 100' of the restricted median nose (measured from the edge of pavement).

            - For high speed facilities (design speed 50 mph or greater), no trees shall be permitted within 200' of the restricted median nose. Beyond this limit, size and spacing shall conform to the Tree Spacing Table.

TREE SPACING TABLE**

Description	Speed (mph)													
	30		35		40		45		50		55		60	
Diameter	(Inches)													
(Within Limits Of Sight Window)	>4≤11	>11≤18	>4≤11	>11≤18	>4≤11	>11≤18	>4≤11	>11≤18	>4≤11	>11≤18	>4≤11	>11≤18	>4≤11	>11≤18
	(Feet)													
Minimum Spacing (c. to c. Of Trunk)	22	91	27	108	33	126	40	146	45	165	52	173	60	193

** Sizes and spacings are based on the following conditions:

a. A single line of trees in the median parallel to but not necessarily colinear with the centerline,

b. A straight approaching mainline, within skew limits as described in No. 2 above.

c. 1. Trees and palms ≤ 11"in diameter casting a vertical 6' wide shadow band on a vehicle entering at stop bar location when viewed by mainline driver beginning at distance 'd'; see SHADOW DIAGRAM, Sheet 2.

   2. Sabal palms with diameters >11" to ≤ 18" spaced at intervals providing a 2 second full view of entering vehicle at stop bar location when viewed by mainline driver beginning at distance 'd'; see PERCEPTION DIAGRAM, Sheet 2.

d. Trees with diameters ≤ 11" intermixed with trees with diameters >11" ≤ 18" are to be spaced based on trees with diameters >11"≤ 18".

For any other conditions the tree sizes, spacings and locations shall be detailed in the plans; see Design Note 5.

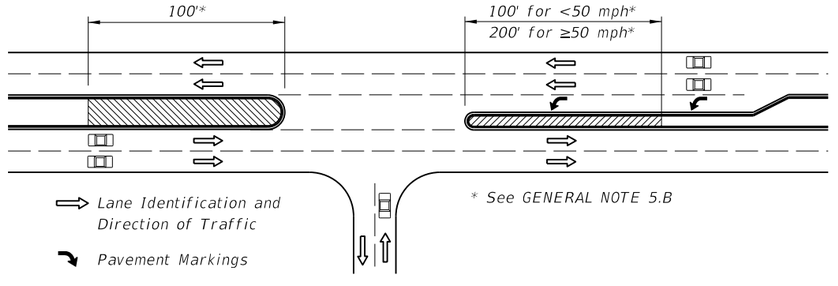

PLAN
Special Areas Limited to Ground Cover

C:\d*projects\standards\roadway\00500-s\00546-01.dgn rd960rh 2:06:58 PM 6/28/2012

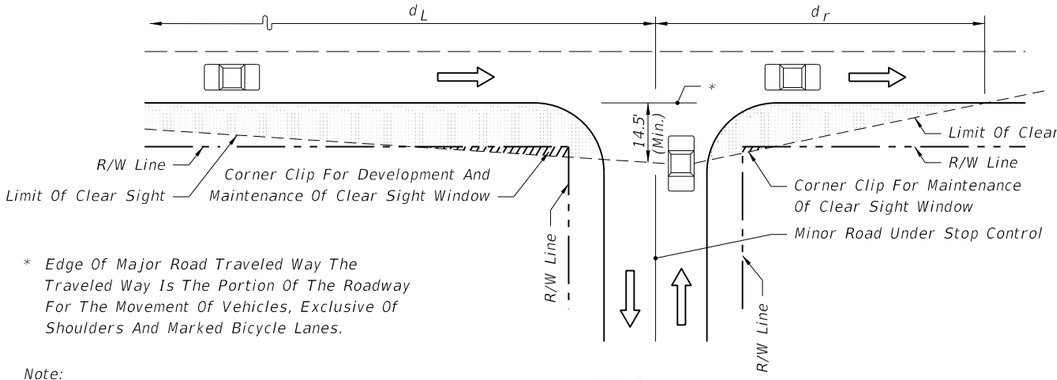

* Edge Of Major Road Traveled Way The Traveled Way Is The Portion Of The Roadway For The Movement Of Vehicles, Exclusive Of Shoulders And Marked Bicycle Lanes.

Note:
Lines For 'Limit Of Clear Sight' Are Opposite Hand When Major Road Near Lane Traffic Moving Left (e.g., One-Way Left).

PICTORIAL

ORIGIN OF CLEAR SIGHT LINE ON MINOR ROAD

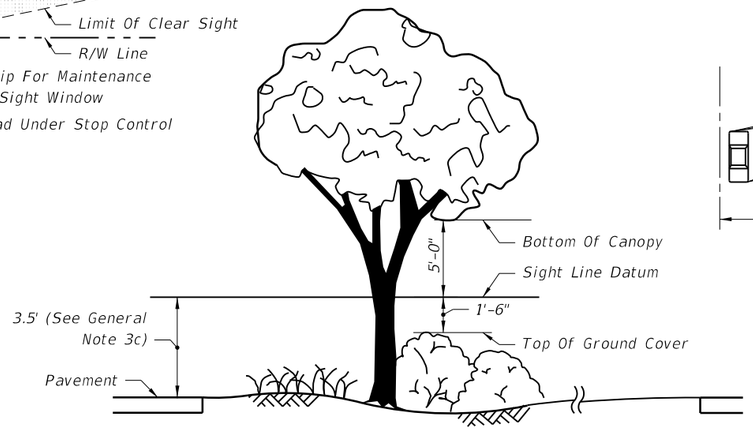

The Intent Of This Standard Is To Provide A Window With Vertical Limits Of Not Less Than 5' Above And 1'-6" Below The Sight Line Datum, And Horizontal Limits Defined By The Limits Of Clear Sight.

PICTORIAL

WINDOW DETAIL

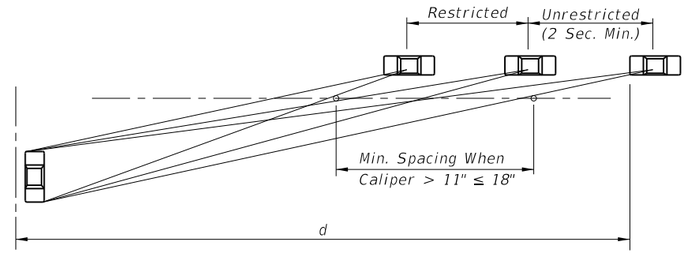

PERCEPTION DIAGRAM

SETTING SABAL PALM (STATE TREE) SPACING

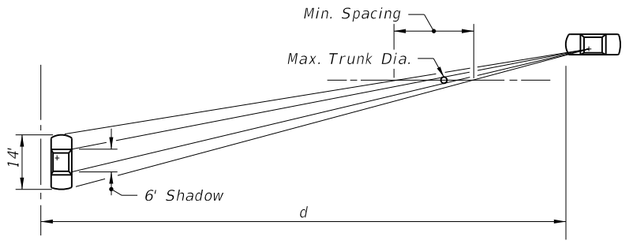

SHADOW DIAGRAM

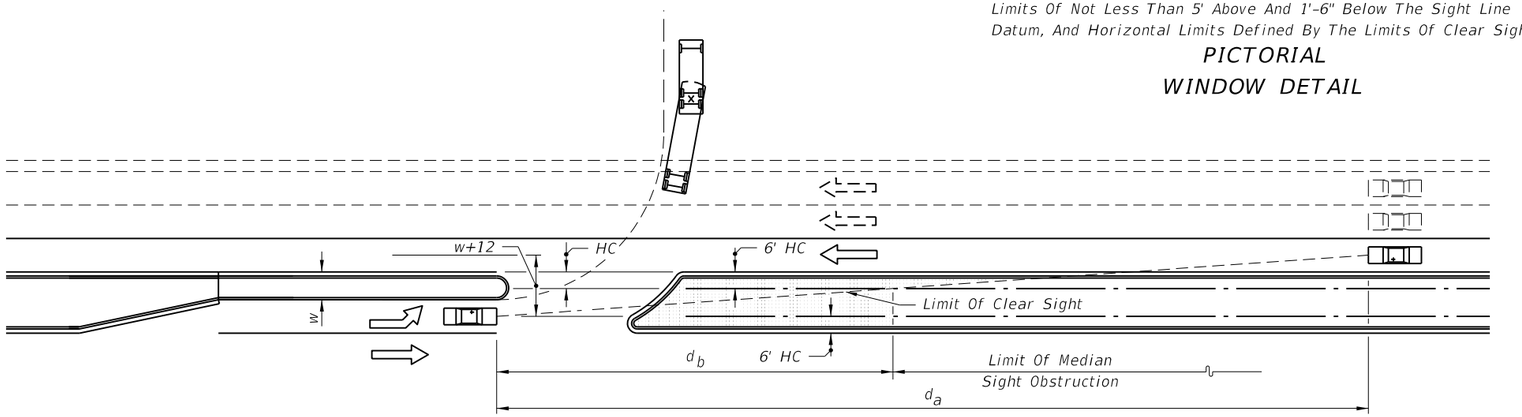

PICTORIAL

da (Feet)									
Design Speed MPH	1 Lane Crossed			2 Lanes Crossed			3 Lanes Crossed		
	P	SU	Comb.	P	SU	Comb.	P	SU	Comb.
30	245	290	330	265	320	365	290	350	395
35	285	335	385	310	370	425	335	410	460
40	325	385	440	355	425	485	385	465	525
45	365	430	495	400	475	545	430	525	590

☆ See Note

☆ The d_a values in this table were established by the method referenced in Design Note 2, and are applicable to urban, predominantly curbed roadways with design speeds of 45 mph or less and meeting the restricted conditions defined in Index No. 700. For horizontal clearance (HC) of six feet (6'), the values for d_b may be determined by the equation $d_b = d_a (w/(w+12))$. For roadways with nonrestricted conditions, d_a and d_b should be based on the geometry for the left turn storage and on clear zone widths (See Index No. 700).

For wide medians where the turning vehicle can approach the through lanes at or near 90°, use d_v values from tables on sheets 5 or 6. (The clear sight line origin is assumed to be 14.5' from the edge of the near lane.)

LEGEND

Areas Free Of Sight Obstructions

CHANNELIZED DIRECTIONAL MEDIAN OPENINGS

C:\d*projects\standards\roadway\00500-s\00546-02.dgn
rd960rh
2:07:00 PM
6/28/2012

LAST REVISION	REVISION	DESCRIPTION:				
07/01/10			FDOT DESIGN STANDARDS 2013	SIGHT DISTANCE AT INTERSECTIONS	INDEX NO. 546	SHEET NO. 2

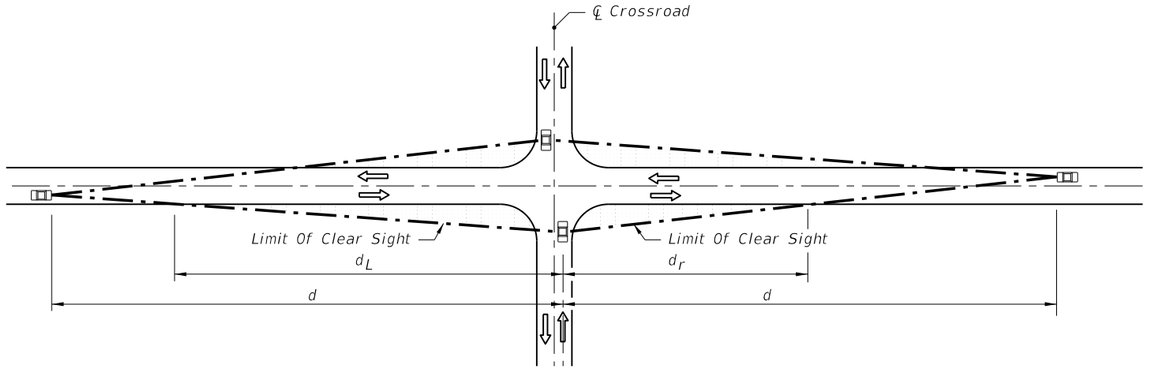

PICTORIAL

2 LANE UNDIVIDED

Design Speed	d	d_L	d_r
30	335	240	150
35	390	275	175
40	445	315	200
45	500	350	225
50	555	390	250
55	610	430	275
60	665	470	300
65	720	510	325

Passenger Vehicle

Design Speed	d	d_L	d_r
30	420	295	190
35	490	345	220
40	560	395	250
45	630	445	280
50	700	495	310
55	770	545	345
60	840	595	375
65	910	645	405

SU Vehicle

Design Speed	d	d_L	d_r
30	510	360	225
35	595	420	265
40	680	480	305
45	765	540	340
50	845	600	375
55	930	660	415
60	1015	720	450
65	1100	780	490

Combination Vehicle

SIGHT DISTANCE (d) AND RELATED DISTANCES (d_L, d_r) (FEET)

2 LANE UNDIVIDED

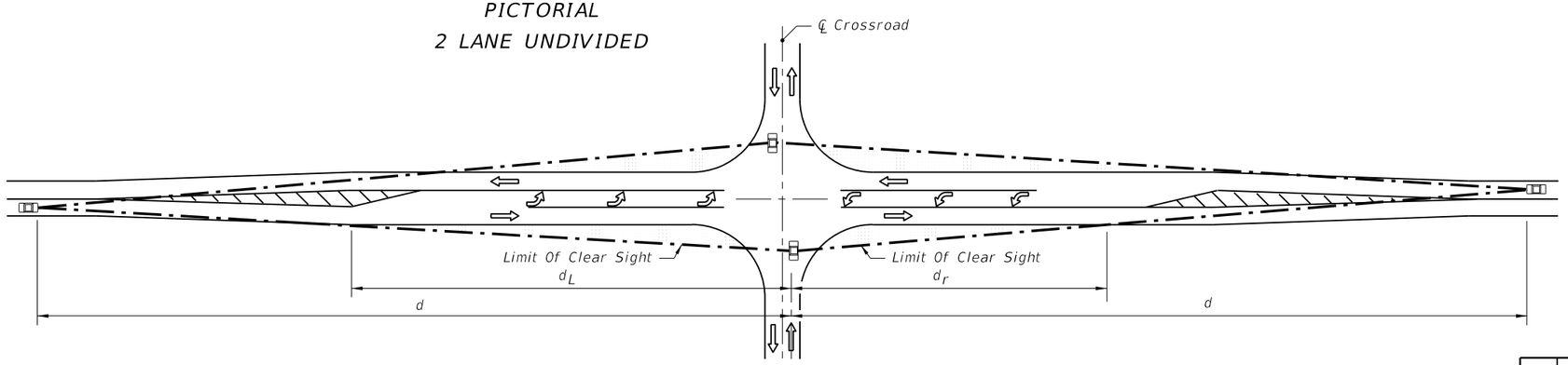

PICTORIAL

2 LANE 2 WAY • FLARED FOR OPPOSING LEFT TURN CENTERED ON ALIGNMENT

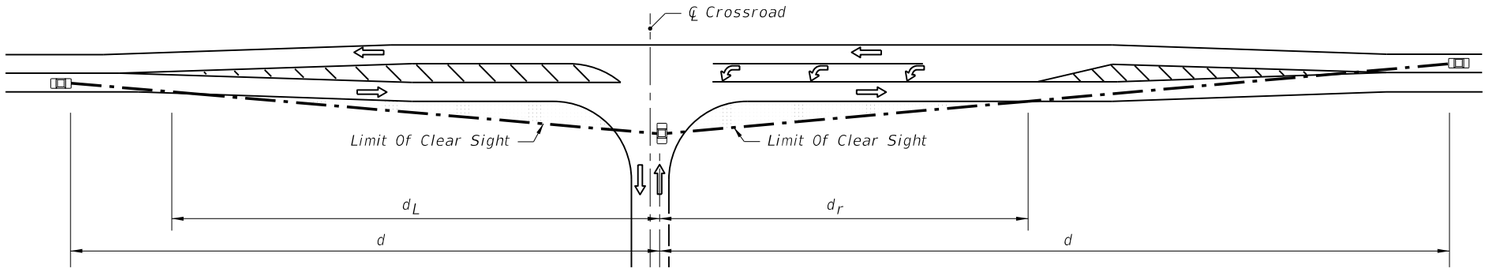

PICTORIAL

2 LANE 2 WAY • FLARED FOR SINGLE SIDE LEFT TURN CENTERED ON ALIGNMENT

Design Speed	d	d_L	d_r
30	355	195	135
35	415	225	155
40	475	260	180
45	530	290	200
50	590	325	220
55	650	355	245
60	710	390	265
65	765	420	290

Passenger Vehicle

Design Speed	d	d_L	d_r
30	450	250	170
35	525	290	200
40	600	330	225
45	675	370	255
50	750	410	285
55	825	450	310
60	900	490	340
65	975	530	370

SU Vehicle

Design Speed	d	d_L	d_r
30	540	295	205
35	630	345	240
40	720	395	270
45	810	445	305
50	900	495	340
55	990	540	375
60	1080	590	405
65	1170	640	440

Combination Vehicle

SIGHT DISTANCE (d) AND RELATED DISTANCES (d_L, d_r) (FEET)

2 LANE 2 WAY • FLARED FOR LEFT TURNS

LEGEND

Areas Free Of Sight Obstructions

NOTE: See Sheet 2 for intersecting roadway origin of clear sight and quadrant corner clips.

C:\d\projects\standards\roadway\00500-s\00546-03.dgn rd960rh 2:07:02 PM 6/28/2012

LAST REVISION	REVISION	DESCRIPTION:		FDOT DESIGN STANDARDS 2013	SIGHT DISTANCE AT INTERSECTIONS	INDEX NO.	SHEET NO.
04						546	3

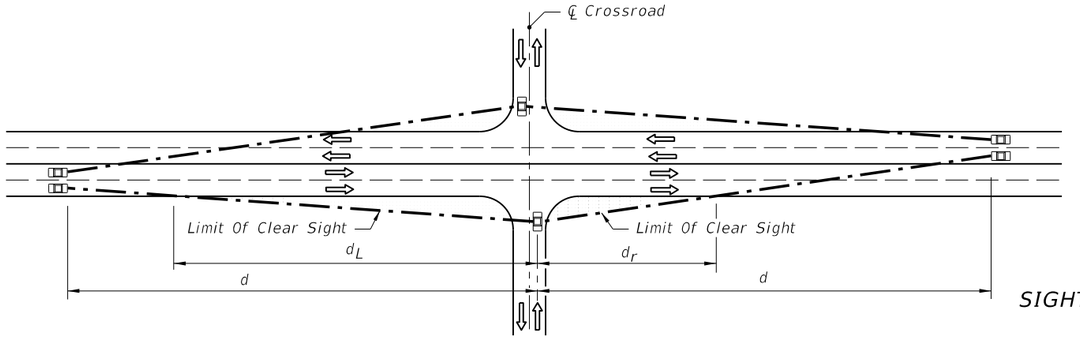

PICTORIAL
4 LANE UNDIVIDED

Design Speed	d	d_L	d_r
30	355	250	115
35	415	295	135
40	475	335	155
45	530	375	175
50	590	415	195
55	650	460	210
60	705	500	230
65	765	540	250

Passenger Vehicle

Design Speed	d	d_L	d_r
30	450	320	150
35	525	370	170
40	600	425	195
45	675	475	220
50	750	530	245
55	825	585	270
60	900	635	295
65	975	690	320

SU Vehicle

Design Speed	d	d_L	d_r
30	540	380	175
35	630	445	205
40	720	510	235
45	810	570	265
50	900	635	295
55	990	700	320
60	1080	765	350
65	1170	825	380

Combination Vehicle

SIGHT DISTANCE (d) AND RELATED DISTANCES (d_L, d_r) (FEET)
4 LANE UNDIVIDED

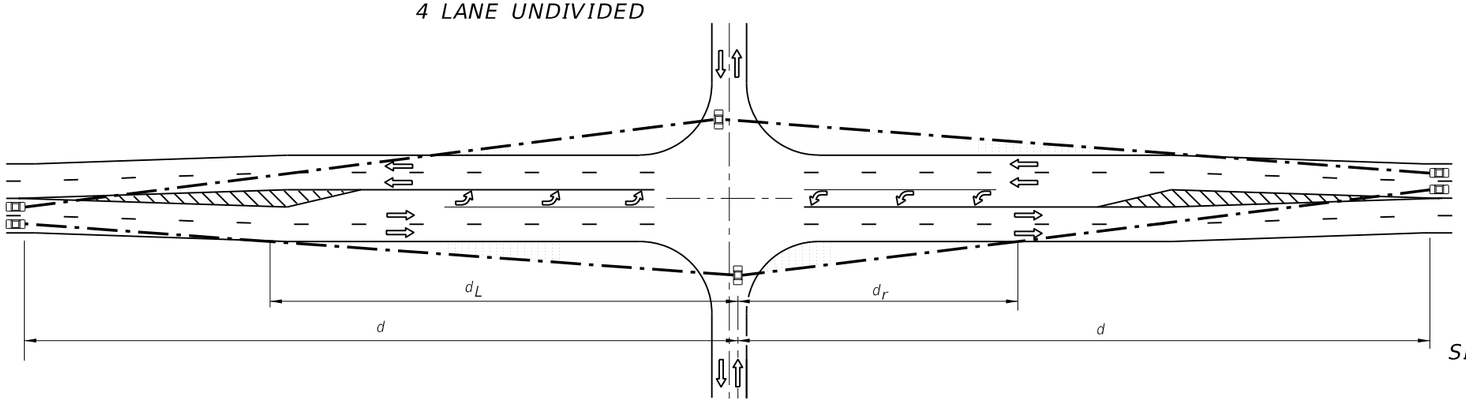

PICTORIAL
4 LANE UNDIVIDED FLARED - SYMMETRICAL

Design Speed	d	d_L	d_r
30	375	205	120
35	440	240	145
40	500	275	165
45	565	310	185
50	625	340	205
55	690	375	225
60	750	410	245
65	815	445	265

Passenger Vehicle

Design Speed	d	d_L	d_r
30	480	220	155
35	560	255	180
40	640	290	210
45	720	330	235
50	800	365	260
55	880	400	285
60	960	440	310
65	1040	480	340

SU Vehicle

Design Speed	d	d_L	d_r
30	570	310	185
35	665	365	215
40	760	415	250
45	855	470	280
50	950	520	310
55	1045	570	340
60	1140	625	370
65	1235	675	400

Combination Vehicle

SIGHT DISTANCE (d) AND RELATED DISTANCES (d_L, d_r) (FEET)
4 LANE UNDIVIDED FLARED - SYMMETRICAL

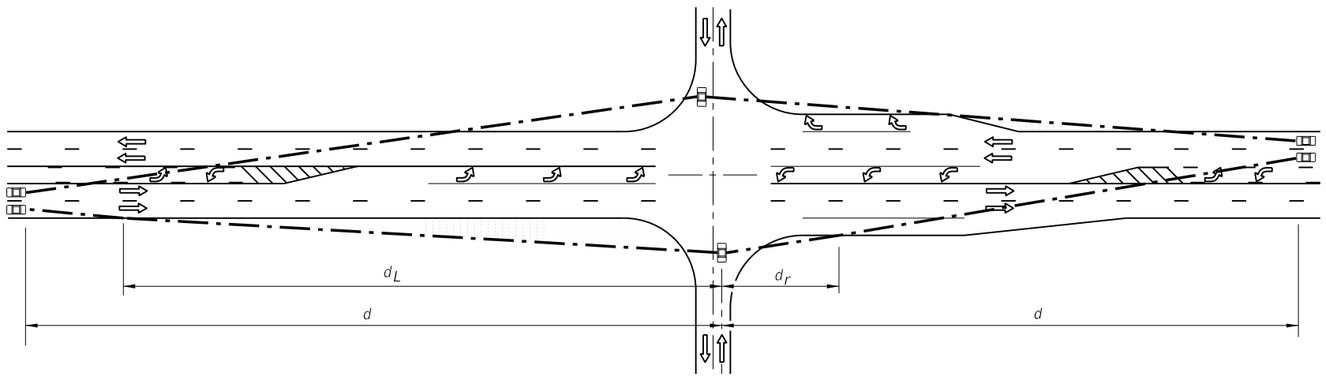

PICTORIAL
4 LANE UNDIVIDED WITH OPTIONAL LANE

Design Speed	d	d_L	d_r
30	375	265	95
35	440	310	115
40	500	355	130
45	565	400	145
50	625	440	160
55	690	490	172
60	750	530	195
65	815	575	210

Passenger Vehicle

Design Speed	d	d_L	d_r
30	480	340	125
35	560	395	145
40	640	450	165
45	720	510	185
50	800	565	205
55	880	620	225
60	960	680	245
65	1040	735	265

SU Vehicle

Design Speed	d	d_L	d_r
30	570	405	145
35	665	470	170
40	760	540	195
45	855	605	220
50	950	670	245
55	1045	740	270
60	1140	805	295
65	1235	875	320

Combination Vehicle

SIGHT DISTANCE (d) AND RELATED DISTANCES (d_L, d_r) (FEET)
4 LANE UNDIVIDED WITH OPTIONAL LANE

LEGEND

Areas Free Of Sight Obstructions

NOTE: See Sheet 2 for intersecting roadway origin of clear sight and quadrant corner clips.

C:\d\projects\standards\roadway\00500-s\00546-04.dgn
rd960rh
2:07:04 PM
6/28/2012

LAST REVISION	REVISION	DESCRIPTION:			INDEX NO.	SHEET NO.
04			FDOT DESIGN STANDARDS 2013	SIGHT DISTANCE AT INTERSECTIONS	546	4

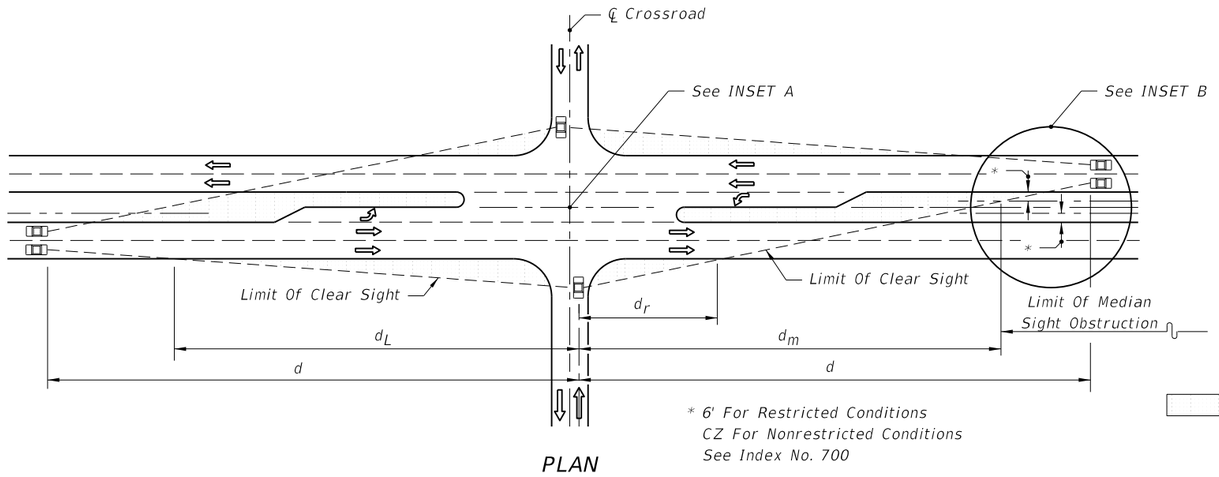

PLAN

* 6' For Restricted Conditions
CZ For Nonrestricted Conditions
See Index No. 700

LEGEND

Areas Free Of Sight Obstructions

PICTORIAL

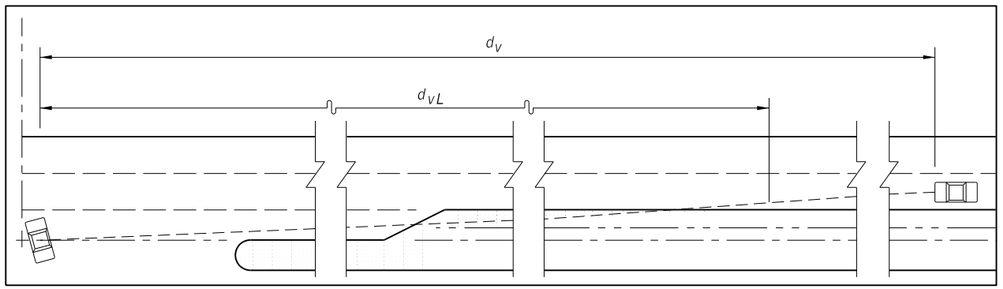

Where The Median Is Sufficiently Wide For The Design Vehicle To Pause In The Median Vehicle Length Plus 6' Min.) The Clear Line Of Sight To The Right (d_V) Is Measured From The Vehicle Pause Location, i.e., Not From The Cross Road Stop Position; Distances d_r & d_m Do Not Apply.

INSET A

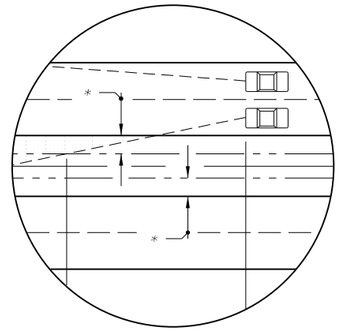

INSET B

PASSENGER VEHICLE (P)

MEDIAN 22' OR LESS				
Design Speed	d	d_L	d_r	d_m
30	390	280	90	320
35	460	330	100	380
40	520	370	110	430
45	590	420	130	480
50	650	460	140	530
55	720	510	160	590
60	780	550	170	640
65	850	600	190	700

25'-64' MEDIAN				
Design Speed	d	d_L	d_v	d_{VL}
30	290	210	330	230
35	330	230	390	280
40	380	270	440	310
45	430	300	500	350
50	480	340	550	390
55	530	370	610	430
60	570	400	660	470
65	620	440	720	510

SINGLE-UNIT TRUCK (SU)

MEDIAN 35' OR LESS				
Design Speed	d	d_L	d_r	d_m
30	540	380	100	460
35	630	450	110	530
40	720	510	130	610
45	810	570	150	690
50	900	640	160	760
55	990	700	180	840
60	1080	760	200	920
65	1170	830	210	990

40'-64' MEDIAN				
Design Speed	d	d_L	d_v	d_{VL}
30	370	260	420	300
35	440	310	490	350
40	500	350	560	400
45	560	400	630	450
50	620	440	700	500
55	690	490	770	540
60	750	530	840	590
65	810	570	910	640

INTERMEDIATE SEMI-TRAILERS (WB-40 & WB-50)

MEDIAN 30' OR LESS				
Design Speed	d	d_L	d_r	d_m
30	620	440	120	520
35	720	510	140	600
40	820	580	160	690
45	930	660	180	780
50	1030	730	200	860
55	1130	800	220	950
60	1240	880	240	1040
65	1340	950	260	1120

35'-50' MEDIAN				
Design Speed	d	d_L	d_r	d_m
30	670	470	100	580
35	780	550	120	680
40	890	630	140	780
45	1000	710	150	870
50	1110	790	170	970
55	1220	860	190	1070
60	1330	940	200	1160
65	1440	1020	220	1260

64' MEDIAN				
Design Speed	d	d_L	d_v	d_{VL}
30	460	330	510	360
35	540	380	590	420
40	620	440	680	480
45	690	490	760	540
50	770	540	850	600
55	850	600	930	660
60	920	650	1020	720
65	1000	710	1100	780

Vehicle Type	Vehicle Length (Ft.)
Passenger (P)	19
Single Unit (SU)	30
Large School Bus	40
WB-40	45.5
WB-50	55

NOTES FOR 4-LANE DIVIDED ROADWAY

1. See Sheet 2 for origin of clear sight line on the minor road.
2. Values shown in the tables are the governing (controlling) sight distances calculated based on 'AASHTO Case B – Intersection with Stop Control on the Minor Road.'

SIGHT DISTANCES (d) & (d_v) AND RELATED DISTANCES (d_L, d_r, d_m & d_{VL}) (FEET)

4 LANE DIVIDED ROADWAY

6/28/2012 2:07:07 PM rd960rh C:\d\projects\standards\roadway\00500-s\00546-05.dgn

LAST REVISION	REVISION	DESCRIPTION:			INDEX NO.	SHEET NO.
07/01/10			FDOT DESIGN STANDARDS 2013	SIGHT DISTANCE AT INTERSECTIONS	546	5

MEDIAN 22' OR LESS				
Design Speed	d_x	d_L	d_r	d_m
30	410	290	80	350
35	480	340	90	410
40	550	390	100	470
45	620	440	110	530
50	690	490	130	580
55	760	540	140	640
60	830	590	150	700
65	900	640	170	760

25'-64' MEDIAN				
Design Speed	d	d_L	d_v	d_{vL}
30	310	220	330	230
35	360	250	390	280
40	410	290	440	310
45	460	330	500	350
50	510	360	550	390
55	570	400	610	430
60	620	440	660	470
65	670	470	720	510

PASSENGER VEHICLE (P)

MEDIAN 35' OR LESS				
Design Speed	d_x	d_L	d_r	d_m
30	590	420	90	510
35	690	490	110	600
40	780	550	120	680
45	880	620	140	760
50	980	690	160	850
55	1080	760	170	940
60	1170	830	190	1020
65	1270	900	200	1100

40'-64' MEDIAN				
Design Speed	d	d_L	d_v	d_{vL}
30	410	290	420	300
35	470	330	490	350
40	540	380	560	400
45	610	430	630	450
50	680	480	700	500
55	740	520	770	540
60	810	570	840	590
65	880	620	910	640

SINGLE-UNIT TRUCK (SU)

MEDIAN 30' OR LESS				
Design Speed	d_x	d_L	d_r	d_m
30	670	470	110	580
35	780	550	130	670
40	890	630	150	770
45	1000	710	170	860
50	1110	790	190	960
55	1220	860	200	1050
60	1330	940	220	1150
65	1440	1020	240	1240

35'-50' MEDIAN				
Design Speed	d_x	d_L	d_r	d_m
30	720	510	100	640
35	830	590	110	740
40	950	670	130	840
45	1070	760	150	950
50	1190	840	160	1060
55	1310	930	180	1160
60	1430	1010	190	1270
65	1550	1100	210	1380

64' MEDIAN				
Design Speed	d	d_L	d_v	d_{vL}
30	490	350	510	360
35	580	410	590	420
40	660	470	680	480
45	740	520	760	540
50	820	580	850	600
55	910	640	930	660
60	990	700	1020	720
65	1070	760	1100	780

INTERMEDIATE SEMI-TRAILERS (WB-40 & WB-50)

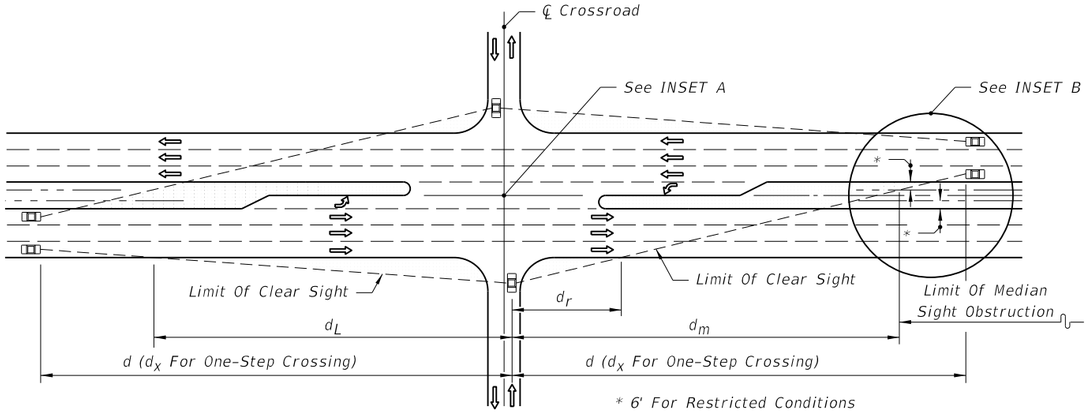

PLAN

PICTORIAL

* 6' For Restricted Conditions
CZ For Nonrestricted Conditions
See Index No. 700

LEGEND

Areas Free Of Sight Obstructions

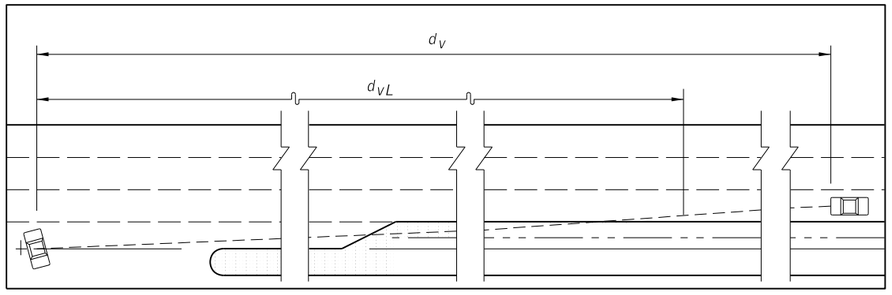

Where The Median Is Sufficiently Wide For The Design Vehicle To Pause In The Median (Vehicle Length Plus 6' Min.) The Clear Line Of Sight To The Right (d_v) Is Measured From The Vehicle Pause Location, i.e., Not From The Cross Road Stop Position; Distances d_r & d_m Do Not Apply.

INSET A

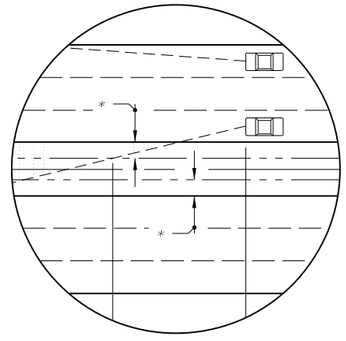

INSET B

NOTES FOR 6-LANE DIVIDED ROADWAY

1. See Sheet 2 for origin of clear sight line on the minor road.
2. Values shown in the tables are the governing (controlling) sight distances calculated based on 'AASHTO Case B – Intersection with Stop Control on the Minor Road.'

SIGHT DISTANCES (d), (d_V) & (d_X) AND RELATED DISTANCES (d_L, d_r, d_m & d_{vL}) (FEET)

6 LANE DIVIDED

C:\d\projects\standards\roadway\00500-s\00546-06.dgn
rd960rh
2:07:09 PM
6/28/2012

LAST REVISION	REVISION	DESCRIPTION:				
07/01/10			FDOT DESIGN STANDARDS 2013	SIGHT DISTANCE AT INTERSECTIONS	INDEX NO. 546	SHEET NO. 6

CROSSING SURFACES	
Type	Definition
C	Concrete
R	Rubber
RA	Rubber/Asphalt
TA	Timber/Asphalt

STOP ZONE FOR RUBBER CROSSING	
Design Speed (mph)	Zone Length (Distance From Stop)
45 Or Less	250'
50 – 55	350'
60 – 65	500'
70	600'

Notes:

1. Type R Crossings are NOT to be used for multiple track crossings within zones for an existing or scheduled future vehicular stop. Zone lengths are charted above.

2. Single track Type R Crossings within the zones on the chart may be used unless engineering or safety considerations dictate otherwise.

GENERAL NOTES

1. The Railroad Company will furnish and install all track bed (ballast), crossties, rails, crossing surface panels and accessory components. All pavement material, including that through the crossing, will be furnished and installed by the Department or its Contractor, unless negotiated otherwise.

2. When a railroad grade crossing is located within the limits of a highway construction project, a transition pavement will be maintained at the approaches of the crossing to reduce vehicular impacts to the crossing. The transition pavement will be maintained as appropriate to protect the crossing from low clearance vehicles and vehicular impacts until the construction project is completed and the final highway surface is constructed.

3. The Central Rail Office will maintain a list of currently used Railroad Crossing Products and will periodically distribute the current list to the District Offices as the list is updated.

4. The Railroad Company shall submit engineering drawings for the proposed crossing surface type to the Construction Project Engineer and/or the District Rail Office for concurrence along with the List of Railroad Crossing Products. The approved engineering drawings of the crossing surface type shall be made a part of the installation agreement.

5. Sidewalks shall be constructed through the crossing between approach sidewalks of the crossing. Sidewalks shall be constructed with appropriate material to allow unobstructed travel through the crossing in accordance with ADA requirements.

6. All asphalt shall be installed in accordance with Index No. 514 and Section 300 of the Standard Specifications.

7. The Department will participate in crossing work, that requires adjustments to rail outside of the crossing, no more than 50 feet from the edge of the travel way.

C:\d\projects\standards\roadway\00500-s\00560-01.dgn
rd960rh
2:07:11 PM
6/28/2012

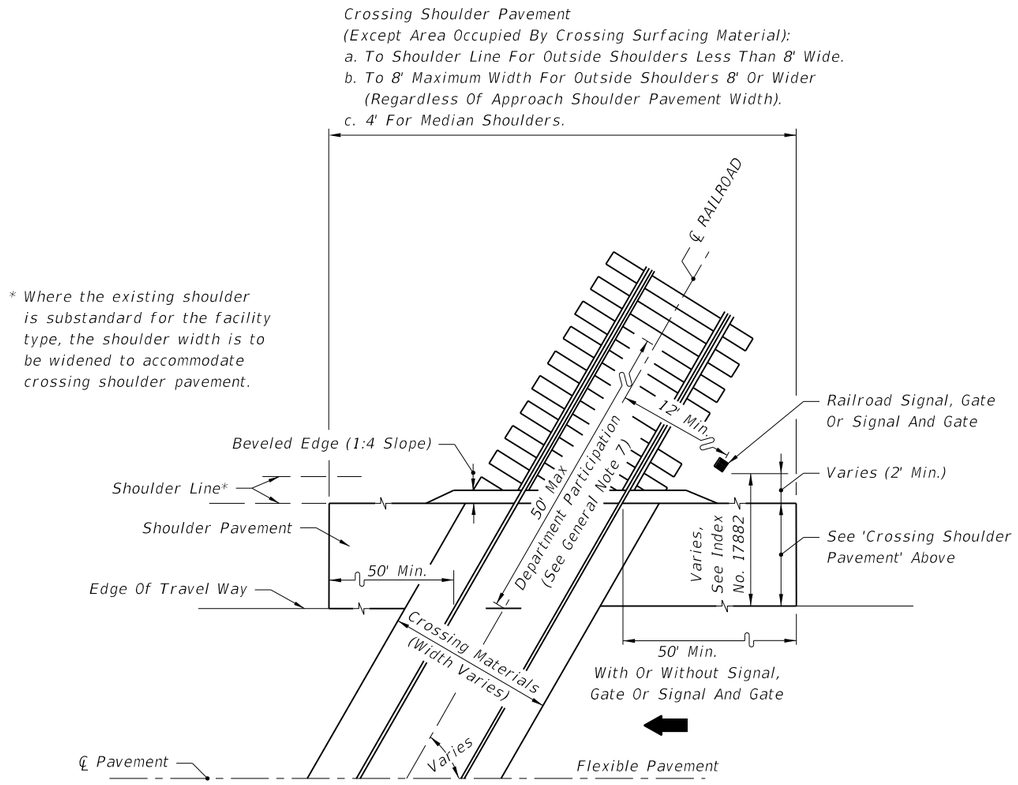

HALF PLAN

ROADWAYS WITH FLUSH SHOULDERS

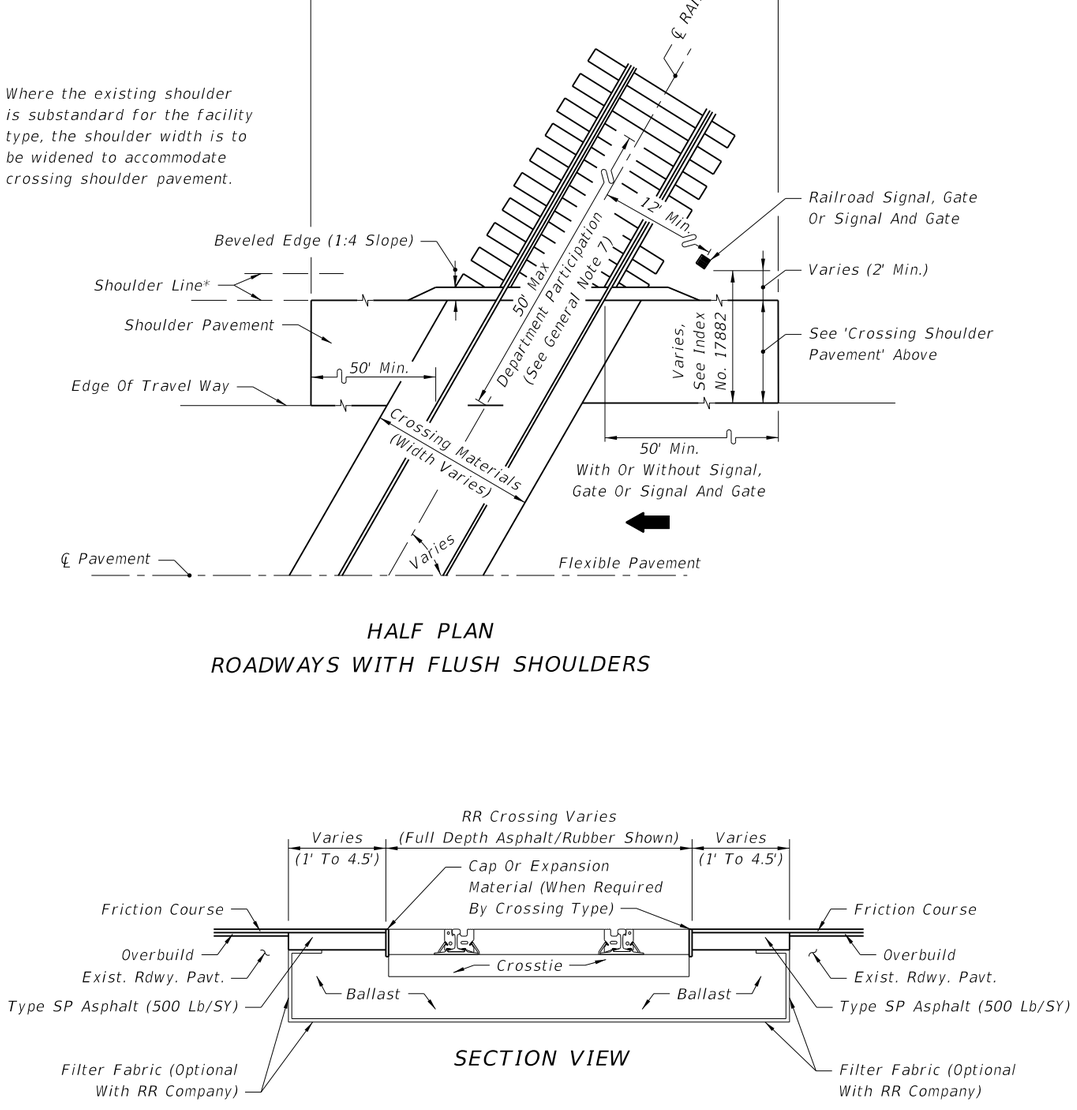

TYPICAL CROSSING MATERIAL REPLACEMENT AT RR CROSSINGS

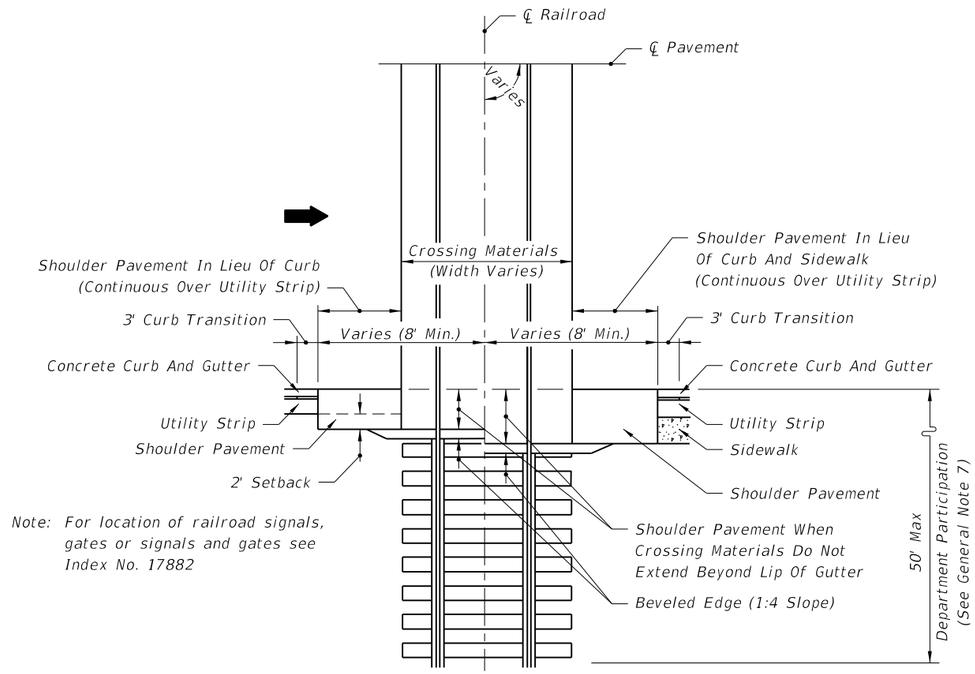

HALF PLAN

CURBED ROADWAYS

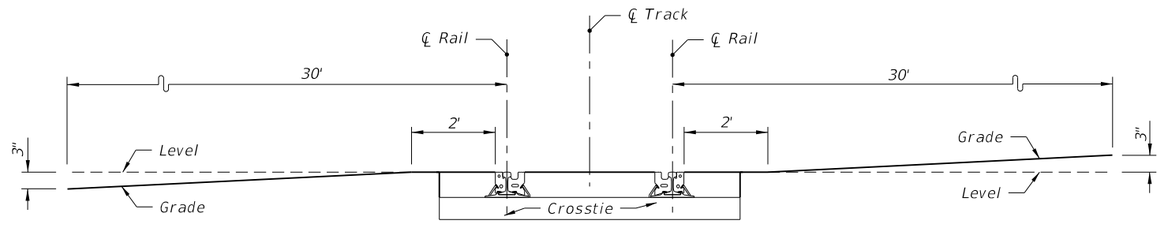

To prevent low-clearance vehicles from becoming caught on the tracks, the crossing surface should be at the same plane as the top of the rails for a distance of 2 feet outside the rails. The surface of the highway should also not be more than 3 inches higher or lower than the top of the nearest rail at a point 30 feet from the rail unless track superelevation makes a different level appropriate. Vertical curves should be used to traverse from the highway grade to a level plane at the elevation of the rails. Rails that are superelevated, or a roadway approach section that is not level, will necessitate a site specific analysis for rail clearances.

VERTICAL ROADWAY ALIGNMENT THROUGH A RAILROAD CROSSING

C:\d\projects\standards\roadway\00500-s\00560-02.dgn rd960rh 2:07:13 PM 6/28/2012

LAST REVISION	REVISION	DESCRIPTION:		FDOT DESIGN STANDARDS 2013	RAILROAD CROSSINGS	INDEX NO.	SHEET NO.
01/01/10						560	2

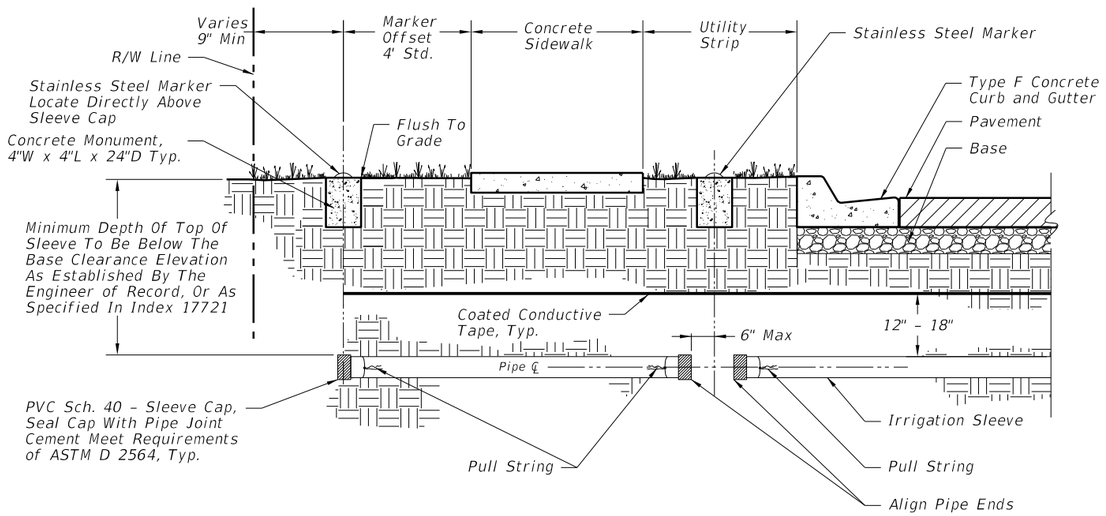

ROADWAY WITH UTILITY STRIP - DETAIL A

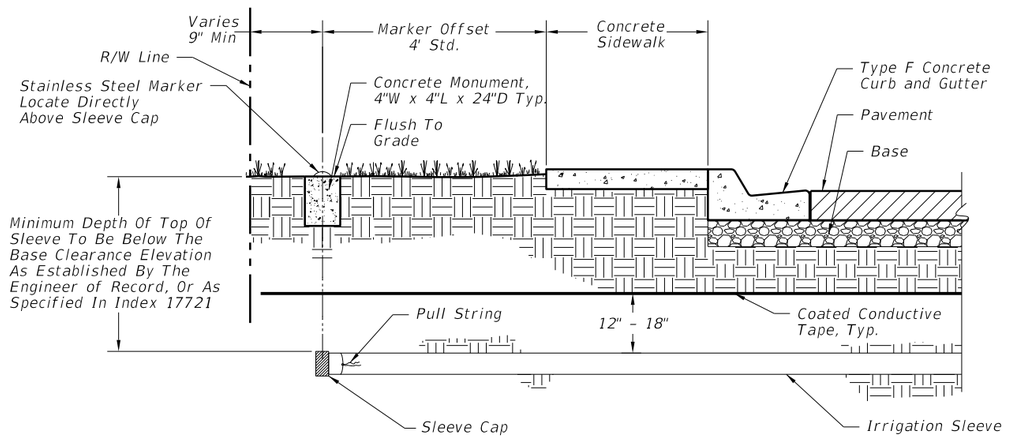

ROADWAY WITHOUT UTILITY STRIP - DETAIL B

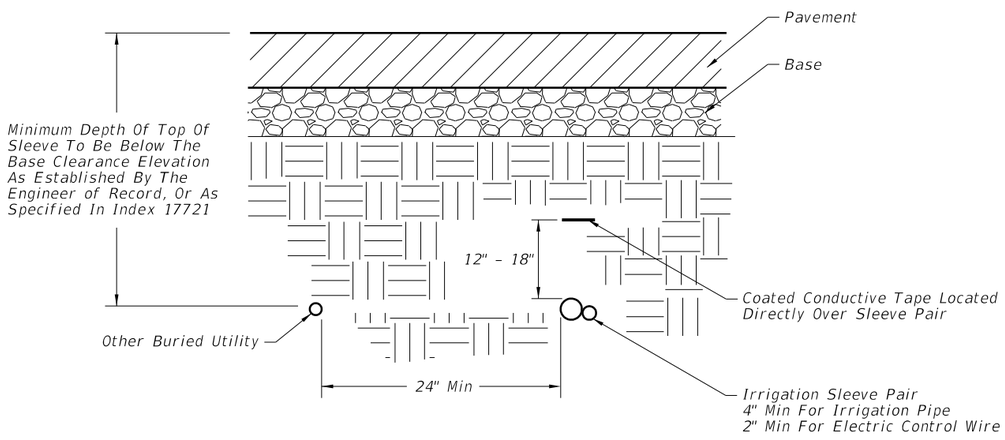

ROADWAY CROSS SECTION - DETAIL C

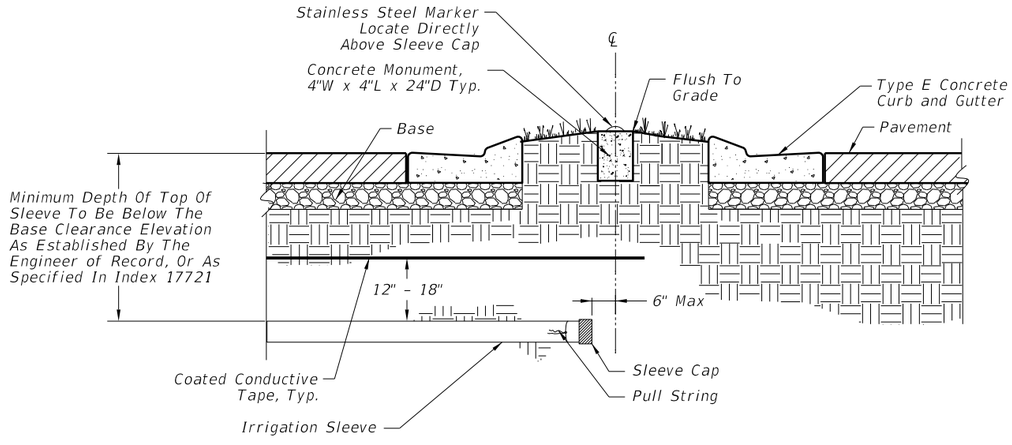

ROADWAY MEDIAN - DETAIL D

GENERAL NOTES:

1. Irrigation Sleeve Installation Details are for constructing a pair of Irrigation Sleeves beneath the proposed roadway prior to beginning roadway construction operations. Install either Sch. 40 PVC or HDPE Sleeves in accordance with Specification Sections 555 and/or 630. For Irrigation Sleeve Installation beneath existing roadways and electrical conduit requirements for existing roadways, see Index No. 17721.
2. Contractor shall install Irrigation Sleeves in accordance with applicable Florida Plumbing Codes and Florida Department of Environmental Protection (FDEP) Rules and Regulations. Irrigation Sleeves containing reclaimed water lines shall follow FDEP Rules and Regulations; and adhere to local Utility and Water Management District Regulations.
3. A Stainless Steel Marker shall be permanently affixed to the top of the Concrete Monument located directly above the Sleeve Cap. Each Marker shall be preprinted with the message: "IRRIGATION SLEEVE BELOW."
4. Coated Conductive Tape shall be installed directly above the sleeve and shall be preprinted with repeated warnings of either: "CAUTION WATER LINE BURIED BELOW" or "CAUTION RECLAIMED WATER LINE BURIED BELOW", or as otherwise approved by the Engineer.
5. For Directional Bore, Coated Conductive Tape to be omitted and replaced with locate wire per Specification Section 555.
6. When installing Sleeves in a median crossover, Sleeve Pairs shall be along the centerline.
7. Irrigation Sleeves for electrical control wire and irrigation pipe shall be no greater than 12" apart.
8. Sleeves are always installed as a pair. Payment will be made for each sleeve.

PAY ITEM NOTE:

Except where shown on the plans as paid for as 555 – Directional Bore, payment for Landscape Irrigation Sleeves shall be made under 591 regardless of the method of installation selected by the contractor. Payment includes full compensation for all work shown in this Index including but not limited to furnishing and installing the Coated Conductive Tape (or locate wire) and concrete monument(s), as well as the cost of restoring cut pavement, sidewalks, sod and etc. to its original condition. The length will be based on the horizontal path in linear feet of each installed sleeve as measured in a straight line from end cap to end cap.

C:\d\projects\standards\landscp\00500-s\00591-01.dgn rd960rh 2:07:15 PM 6/28/2012

LAST REVISION	REVISION	DESCRIPTION:				
01/01/12			FDOT DESIGN STANDARDS 2013	LANDSCAPE IRRIGATION SLEEVES	INDEX NO. 591	SHEET NO. 1

SHEET NO.	CONTENTS
1	Preface Manual On Uniform Traffic Control Devices Abbreviations Symbols
2	Definitions Temporary Traffic Control Devices Pedestrian and Bicyclist Overhead Work Railroads Sight Distance Above Ground Hazard
3	Clear Zone Widths For Work Zones Superelevation Length Of Lane Closures Overweight/Oversize Vehicles Lane Widths High-Visibility Safety Apparel Regulatory Speeds In Work Zones
4	Temporary Raised Rumble Strips Temporary Portable Rumble Strips
5	Flagger Control Survey Work Zones Signs
6	Work Zone Sign Supports
7	Project Information Sign
8	Commonly Used Warning and Regulatory Signs In Work Zones
9	Manholes/Crosswalks/Joints Truck Mounted Attenuators Removing Pavement Markings Signals Channelizing and Lighting Devices Channelizing and Lighting Devices Consistency Warning Lights Standard Orange Flag Portable Changeable (Variable) Message Signs (PCMS) Advanced Warning Arrow Boards
10	Drop-Offs In Work Zones
11	Business Entrance Temporary Asphalt Separator
12	Identifications-Channelizing and Lighting Devices
13	Pavement Markings

PREFACE

All projects and works on highways, roads and streets shall have a traffic control plan. All work shall be executed under the established plan and Department approved procedures. This index contains information specific to the Federal and State guidelines and standards for the preparation of traffic control plans and for the execution of traffic control in work zones, for construction and maintenance operations and utility work on highways, roads and streets on the State Highway System. Certain requirements in this Index are based on the high volume nature of State Highways. For highways, roads and streets off the State Highway System, the local agency (City/County) having jurisdiction may adopt requirements based on the minimum requirements provided in the MUTCD.

Index No. 600 provides Department policy and standards. Changes are only to be made thru Department approved procedures. Index Nos. 601 thru 670 provide typical applications for various situations. Modification can be made to these Indexes as long as the changes comply with the MUTCD and Department Design Standards.

The sign spacings shown on the Indexes are typical (recommended) distances. These distances may be increased or decreased based on field conditions, in order to avoid conflicts or to improve site specific traffic controls.

MANUAL ON UNIFORM TRAFFIC CONTROL DEVICES

The Florida Department of Transportation has adopted the "Manual On Uniform Traffic Control Devices For Streets And Highways" (MUTCD) and subsequent revisions and addendums, as published by the U.S. Department of Transportation, Federal Highway Administration, for mandatory use on the State Maintained Highway System whenever there exists the need for construction, maintenance operations or utility work.

ABBREVIATIONS

Abbreviations assigned to the 600 series Design Standards and applicable to traffic control plans, unless otherwise identified in the plans, are as follows:

CFR	Code of Federal Regulations
CSIP	Cost Savings Initiative Proposal
DTOE	District Traffic Operations Engineer
FDOT	Florida Department Of Transportation
HAR	Highway Advisory Radio
L	Taper Length, Buffer Length Or Taper Length Plus Buffer Space
MAS	Motorist Awareness System
MOT	Maintenance Of Traffic
MOTC	Maintenance Of Traffic Committee
MUTCD	Manual On Uniform Traffic Control Devices For Streets And Highways
NCHRP	National Cooperative Highway Research Program
PCMS	Portable Changeable (Variable) Message Sign
PRS	Portable Regulatory Sign
R	Radius
RPM	Raised Retroreflective Pavement Marker
RSDU	Radar Speed Display Unit
S	Posted Speed Of Off-Peak 85 Percentile Speed (MPH)
SLEO	Speed and Law Enforcement Officer
TTC	Temporary Traffic Control
TCP	Traffic Control Plan(s)
TCZ	Traffic Control Zones
TMA	Truck/Trailer Mounted Attenuator
W	Width Of Taper Transition In Feet, i.e., Lateral Offset

SYMBOLS

The symbols shown are found in the FDOT site menu under Traffic Control cell library on the CADD system. Symbols assigned to the 600 series Design Standards and applicable to traffic control plans, unless otherwise identified in the plans, are as follows:

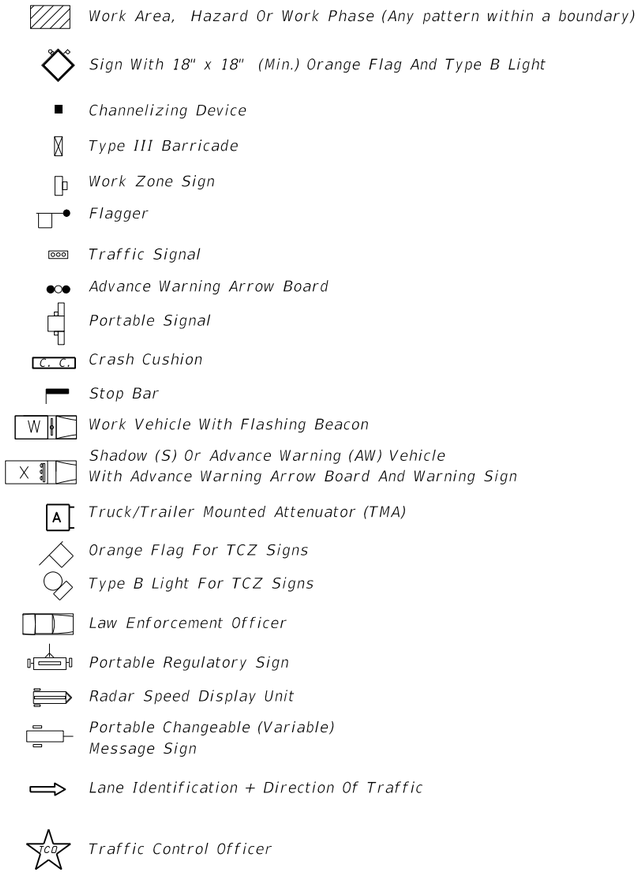

Work Area, Hazard Or Work Phase (Any pattern within a boundary)

Sign With 18" x 18" (Min.) Orange Flag And Type B Light

Channelizing Device

Type III Barricade

Work Zone Sign

Flagger

Traffic Signal

Advance Warning Arrow Board

Portable Signal

Crash Cushion

Stop Bar

Work Vehicle With Flashing Beacon

Shadow (S) Or Advance Warning (AW) Vehicle With Advance Warning Arrow Board And Warning Sign

Truck/Trailer Mounted Attenuator (TMA)

Orange Flag For TCZ Signs

Type B Light For TCZ Signs

Law Enforcement Officer

Portable Regulatory Sign

Radar Speed Display Unit

Portable Changeable (Variable) Message Sign

Lane Identification + Direction Of Traffic

Traffic Control Officer

C:\d\projects\standards\roadway\00600-s\00600-01.dgn
rd960rh
2:07:18 PM
6/28/2012

DEFINITIONS

Regulatory Speed (In Work Zones)

The maximum permitted travel speed posted for the work zone is indicated by the regulatory speed limit signs. The work zone speed must be shown or noted in the plans. This speed should be used as the minimum design speed to determine runout lengths, departure rates, flare rates, lengths of need, clear zone widths, taper lengths, crash cushion requirements, marker spacings, superelevation and other similar features.

Advisory Speed

The maximum recommended travel speed through a curve or a hazardous area.

Travel Way

The portion of the roadway for the movement of vehicles. For traffic control through work zones, travel way may include the temporary use of shoulders and any other permanent or temporary surface intended for use as a lane for the movement of vehicular traffic.

a. Travel Lane: The designated widths of roadway pavement marked to carry through traffic and to separate it from opposing traffic or traffic occupying other traffic lanes.

b. Auxiliary Lane: The designated widths of roadway pavement marked to separate speed change, turning, passing and climbing maneuvers from through traffic.

Detour, Lane Shift, and Diversion

A detour is the redirection of traffic onto another roadway to bypass the temporary traffic control zone. A lane shift is the redirection of traffic onto a different section of the permanent pavement. A diversion is the redirection of traffic onto a temporary roadway, usually adjacent to the permanent roadway and within the limits of the right of way.

Above Ground Hazard

An above ground hazard is any object, material or equipment other than traffic control devices that encroaches upon the travel way or that is located within the clear zone which does not meet the Department's safety criteria, i.e., anything that is greater than 4" in height and is firm and unyielding or doesn't meet breakaway requirements.

TEMPORARY TRAFFIC CONTROL DEVICES

All temporary traffic control devices shall be on either the Department's Qualified Product List (QPL) or the Department's Approved Products List (APL). Ensure the appropriate QPL or APL number is permanently marked on the device in a readily visible location.

All temporary traffic control devices shall be removed as soon as practical when they are no longer needed. When work is suspended for short periods of time, temporary traffic control devices that are no longer appropriate shall be removed or covered.

Arrow Boards, Portable Changeable Message Signs, Radar Speed Display Trailer, Portable Regulatory Signs, and any other trailer mounted device shall be delineated with a temporary traffic control device placed at each corner when in use and shall be moved outside the travel way and clear zone or be shielded by a barrier or crash cushion when not in use.

PEDESTRIAN AND BICYCLIST

When an existing pedestrian way or bicycle way is located within a traffic control work zone, accommodation must be maintained and provision for the disabled must be provided.

Only approved temporary traffic control devices may be used to delineate a temporary traffic control zone pedestrian walkway.

Advanced notification of sidewalk closures and marked detours shall be provided by appropriate signs.

OVERHEAD WORK

Work is only allowed over a traffic lane when one of the following options is used:

OPTION 1 (OVERHEAD WORK USING A MODIFIED LANE CLOSURE)

Overhead work using a modified lane closure is allowed if all of the following conditions are met:

a. Work operation is located in a signalized intersection and limited to signals, signs, lighting and utilities.
b. Work operations are 60 minutes or less.
c. Speed limit is 45 mph or less.
d. Aerial lift equipment in the work area has high-intensity, rotating, flashing, oscillating, or strobe lights operating.
e. Aerial lift equipment is placed directly below the work area to close the lane.
f. Traffic control devices are placed in advance of the vehicle/equipment closing the lane using a minimum 100 foot taper.
g. Volume or complexity of the roadway may dictate additional devices, signs, flagmen and/or a traffic control officer.

OPTION 2 (OVERHEAD WORK ABOVE AN OPEN TRAFFIC LANE)

Overhead work above a open traffic lane is allowed if all of the following conditions are met:

a. Work operation is located on a utility pole, light pole, signal pole, or their appurtenances.
b. Work operations are 60 minutes or less.
c. Speed limit is 45 mph or less.
d. No encroachment by any part of the work activities and equipment within an area bounded by 2 feet outside the edge of travel way and 18 feet high.
e. Aerial lift equipment in the work area has high-intensity, rotating, flashing, oscillating, or strobe lights operating.
f. Volume or complexity of the roadway may dictate additional devices, signs, flagmen and/or a traffic control officer.
g. Adequate precautions are taken to prevent parts, tools, equipment and other objects from falling into open lanes of traffic.
h. Other Governmental Agencies, Rail facilities, or Codes may require a greater clearance. The greater clearance required prevails as the rule.

OPTION 3 (OVERHEAD WORK ADJACENT TO AN OPEN TRAFFIC LANE)

Overhead work adjacent to an open traffic lane is allowed if all of the following conditions are met:

a. Work operation is located on a utility pole, light pole, signal pole, or their appurtenances.
b. Work operations are 1 day or less.
c. Speed limit is 45 mph or less.
d. No encroachment by any part of the work activities and equipment within 2 foot from the edge of travelway up to 18' height.
   Above 18' in height, no encroachment by any part of the work activities and equipment over the open traffic lane (except as allowed in Option 2 for work operations of 60 minutes or less).
e. Aerial lift equipment in the work area has high-intensity, rotating, flashing, oscillating, or strobe lights operating.
f. Volume or complexity of the roadway may dictate additional devices, signs, flagmen and/or a traffic control officer.
g. Adequate precautions are taken to prevent parts, tools, equipment and other objects from falling into open lanes of traffic.
h. Other Governmental Agencies, Rail facilities, or Codes may require a greater clearance. The greater clearance required prevails as the rule.

OVERHEAD WORK CONTINUED..

OVERHEAD WORK CONTINUED..

OPTION 4 (OVERHEAD WORK MAINTAINING TRAFFIC WITH NO ENCROACHMENT BELOW THE OVERHEAD WORK AREA)

Traffic shall be detoured, shifted, diverted or paced as to not encroach in the area directly below the overhead work operations in accordance with the appropriate standard index drawing or detailed in the plans. This option applies to, but not limited to, the following construction activities:

a. Beam, girder, segment, and bent/pier cap placement.
b. Form and falsework placement and removal.
c. Concrete placement.
d. Railing construction located at edge of deck.
e. Structure demolition.

OPTION 5 (CONDUCTOR/CABLE PULLING ABOVE AN OPEN TRAFFIC LANE)

Overhead cable and/or de-energized conductor installations initial pull to proper tension shall be done in accordance with the appropriate Standard Index or temporary traffic control plan.

Continuous pulling operations of secured cable and/or conductors are allowed over open lane(s) of traffic with no encroachment by any part of the work activities, materials or equipment within the minimal vertical clearance above the travel way. The utility shall take precautions to ensure that pull ropes and conductors/cables at no time fall below the minimum vertical clearance.

On Limited Access facilities, a site specific temporary traffic control plan is required. The temporary traffic control plan shall include:

a. The temporary traffic control set up for the initial pulling of the pull rope across the roadway.
b. During pulling operations, advance warning consisting of no less than a Changeable Message Sign upstream of the work area with alternating messages, "Overhead Work Ahead" and "Be Prepared to Stop" followed by a traffic control officer and police vehicle with blue lights flashing during the pulling operation.

RAILROADS

Railroad crossings affected by a construction project should be evaluated for traffic controls to reduce queuing on the tracks. The evaluation should include as a minimum: traffic volumes, distance from the tracks to the intersections, lane closure or taper locations, signal timing, etc.

SIGHT DISTANCE

Tapers: Transition tapers should be obvious to drivers. If restricted sight distance is a problem (e.g., a sharp vertical or horizontal curve), the taper should begin well in advance of the view obstruction. The beginning of tapers should not be hidden behind curves.

Intersections: Traffic control devices at intersections must provide sight distances for the road user to perceive potential conflicts and to traverse the intersection safely. Construction equipment and materials shall not restrict intersection sight distance.

ABOVE GROUND HAZARD

Above ground hazards (see definitions) are to be considered work areas during working hours and treated with appropriate work zone traffic control procedures. During nonworking hours, all objects, materials and equipment that constitute an above ground hazard must be stored/placed outside the travel way and clear zone or be shielded by a barrier or crash cushion.

For above ground hazards within a work zone the clear zone required should be based on the regulatory speed posted during construction.

C:\d\projects\standards\roadway\00600-s\00600-02.dgn
rd960rh
2:07:20 PM
6/28/2012

CLEAR ZONE WIDTHS FOR WORK ZONES

The term 'clear zone' describes the unobstructed relatively flat area, impacted by construction, extending outward from the edge of the traffic lane. The table below gives clear zone widths in work zones for medians and roadside conditions other than for roadside canals; where roadside canals are present, clear zone widths are to conform with the distances to canals as described in Volume I, Chapter 4, Section 4.2 and Exhibit 4-A and 4-B of the Plans Preparation Manual.

CLEAR ZONE WIDTHS FOR WORK ZONES		
WORK ZONE SPEED (MPH)	TRAVEL LANES & MULTILANE RAMPS (feet)	AUXILIARY LANES & SINGLE LANE RAMPS (feet)
60-70	30	18
55	24	14
45-50	18	10
30-40	14	10
ALL SPEEDS CURB & GUTTER	4' BEHIND FACE OF CURB	4' BEHIND FACE OF CURB

SUPERELEVATION

Horizontal curves constructed in conjunction with work zone traffic control should have the required superelevation applied to the design radii. Under conditions where normal crown controls curvature, the minimum radii that can be applied are listed in the table below.

MINIMUM RADII FOR NORMAL CROWN	
WORK ZONE POSTED SPEED	MINIMUM RADIUS
MPH	feet
65	3130
60	2400
55	1840
50	1390
45	1080
40	820
35	610
30	430
Superelevate When Smaller Radii is Used	

LENGTH OF LANE CLOSURES

Lane closures shall not exceed 2 miles in total length (taper, buffer space and work space) in any given direction on the Interstate or on state highways with a posted speed of 55 MPH or greater.

OVERWEIGHT/OVERSIZE VEHICLES

Restrictions to Lane Widths, Heights or Load Capacity can greatly impact the movement of over dimensioned loads. The Contractor shall notify the Engineer who in turn shall notify the State Permits Office, phone no. (850) 410-5777, at least seven calendar days in advance of implementing a maintenance of traffic plan which will impact the flow of overweight/oversized vehicles. Information provided shall include location, type of restriction (height, width or weight) and restriction time frames. When the roadway is restored to normal service the State Permits Office shall be notified immediately.

LANE WIDTHS

Lane widths of through roadways should be maintained through work zone travel ways wherever practical. The minimum widths for work zone travel lanes shall be as follows: 11' for Interstate with at least one 12' lane provided in each direction, unless formally excepted by the Federal Highway Administration; 11' for freeways; and 10' for all other facilities.

HIGH-VISIBILITY SAFETY APPAREL

All high-visibility safety apparel shall meet the requirements of the International Safety Equipment Association (ISEA) and the American National Standards Institute (ANSI) for High-Visibility Safety Apparel", and labeled as ANSI/ISEA 107-2004 or 107-2010. The apparel background (outer) material color shall be either fluorescent orange-red or fluorescent yellow-green as defined by the standard. The retroreflective material shall be orange, yellow, white, silver, yellow-green, or a fluorescent version of these colors, and shall be visible at a minimum distance of 1,000 feet. Class 3 apparel may be substituted for Class 2 apparel. Replace apparel that is not visible at 1,000 feet.

WORKERS: All workers within the right-of-way shall wear ANSI/ISEA Class 2 apparel. Workers operating machinery or equipment in which loose clothing could become entangled during operation shall wear fitted high-visibility safety apparel. Workers inside the bucket of a bucket truck are not required to wear high-visibility safety apparel.

UTILITIES: When other industry apparel safety standards require utility workers to wear apparel that is inconsistent with FDOT requirements such as NFPA, OSHA, ANSI, etc., the other standards for apparel may prevail.

FLAGGERS: For daytime activities, Flaggers shall wear ANSI/ISEA Class 2 apparel. For nighttime activities, Flaggers shall wear ANSI/ISEA Class 3 apparel.

REGULATORY SPEEDS IN WORK ZONES

Traffic Control Plans (TCP's) for all projects must include specific regulatory speeds for each phase of work. This can either be the posted speed or a reduced speed. The speed shall be noted in the TCPs; this includes indicating the existing speed if no reduction is to be made. Regulatory speeds are to be uniformly established through each phase.

In general, the regulatory speed should be established to route vehicles safely through the work zone as close as to normal highway speed as possible. The regulatory speed should not be reduced more than 10 mph below the posted speed and never below the minimum statutory speed for the class of facility. When a speed reduction greater than 10 mph is imposed, the reduction is to be done in 10 mph per 500' increments.

Temporary regulatory speed signs shall be removed as soon as the conditions requiring the reduced speed no longer exist. Once the work zone regulatory speeds are removed, the regulatory speed existing prior to construction will automatically go back into effect unless new speed limit signing is provided for in the plans.

On projects with interspaced work activities, speed reductions should be located in proximity to those activities which merit a reduced speed, and not "blanketed" for the entire project. At the departure of such activities, the normal highway speed should be posted to give the motorist notice that normal speed can be resumed.

If the existing regulatory speed is to be used, consideration should be given to supplementing the existing signs when the construction work zone is between existing regulatory speed signs. For projects where the reduced speed conditions exist for greater than 1 mile in rural areas (non-interstate) and on rural or urban interstate, additional regulatory speed signs are to be placed at no more than 1 mile intervals. Engineering judgement should be used in placement of the additional signs. Locating these signs beyond ramp entrances and beyond major intersections are examples of proper placement. For urban situations (non-interstate), additional speed signs are to be placed at a maximum of 1000' apart.

When field conditions warrant speed reductions different from those shown in the TCP the contractor may submit to the project engineer for approval by the Department, a signed and sealed study to justify the need for further reducing the posted speed, or, the engineer may request the District Traffic Operations Engineer (DTOE) to investigate the need. It will not be necessary for the DTOE to issue regulations for regulatory speeds in work zones due to the revised provisions of F.S. 316.07451(2) (b). Advisory Speed plates will be used at the option of the field engineer for temporary use while processing a request to change the regulatory speed specified in the plans when deemed necessary. Advisory speed plates cannot be used alone but must be placed below the construction warning sign for which the advisory speed is required.

For additional information refer to the FDOT Plans Preparation Manual, Volume I, Chapter 10.

C:\d\projects\standards\roadway\00600-s\00600-03.dgn
rd960rh
2:07:23 PM
6/28/2012

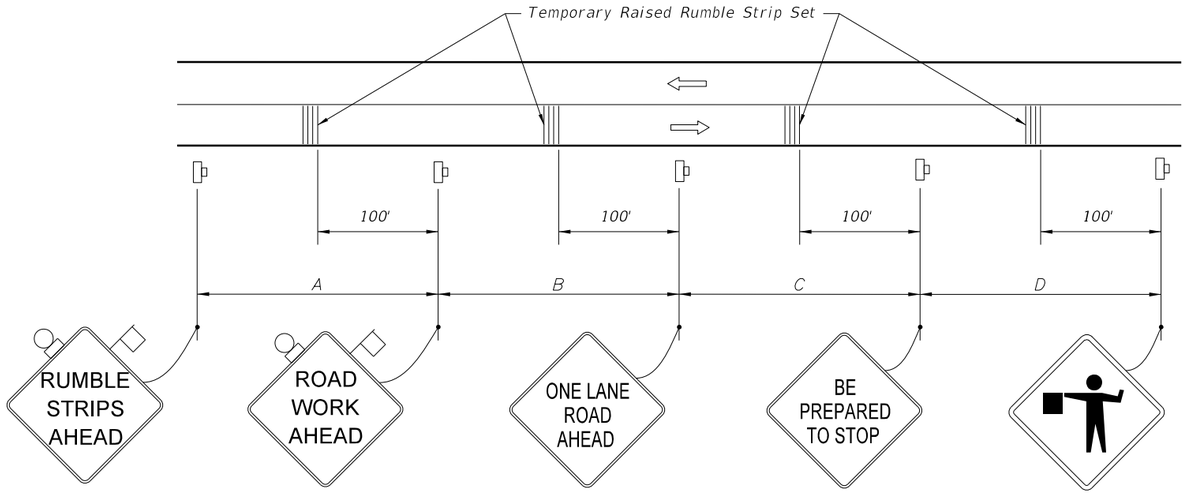

TYPICAL PLACEMENT OF TEMPORARY RAISED RUMBLE STRIPS

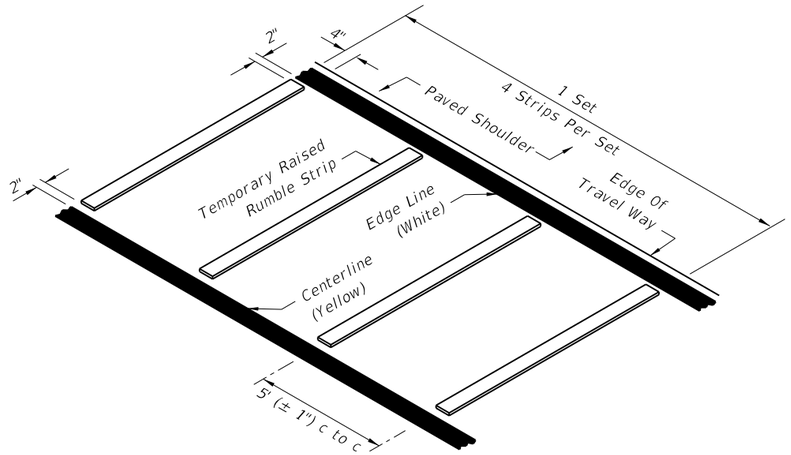

REMOVABLE POLYMER RUMBLE STRIP SET (PAVED SHOULDER SHOWN)

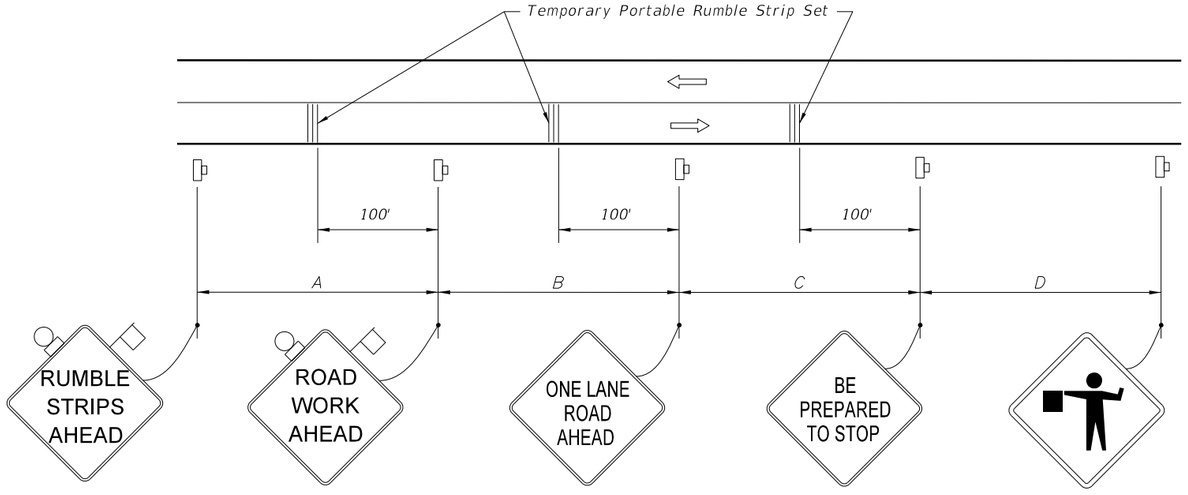

TYPICAL PLACEMENT OF TEMPORARY INTERNALLY BALLASTED RUMBLE STRIPS

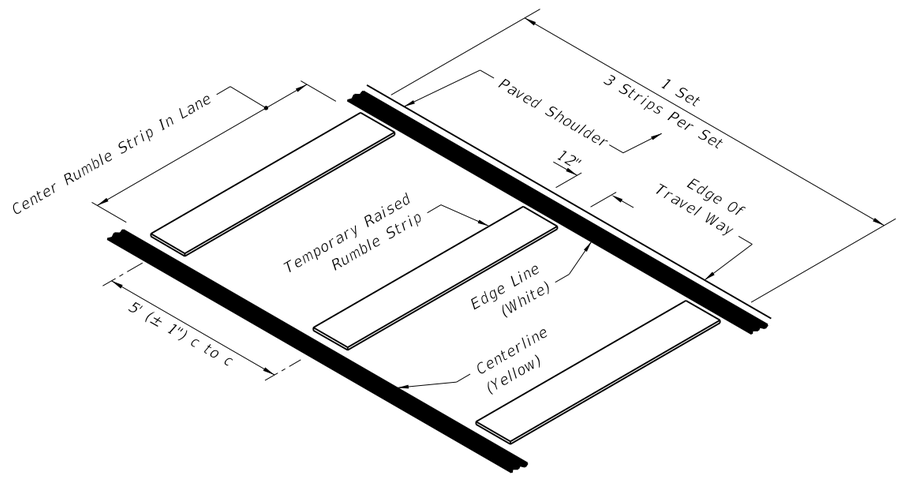

MOLDED ENGINEERED POLYMER RUMBLE STRIP SET (PAVED SHOULDER SHOWN)

DISTANCE BETWEEN SIGNS				
Speed (mph)	Spacing (ft.)			
	A	B	C	D
40 or less	200	200	200	100
45	350	350	350	175
50	500	500	500	250
55 or greater	500	1640	1000	500

GENERAL NOTES

1. Temporary rumble strips sets shall be placed in advance of each flagging station when called for in the plans.
2. Temporary rumble strip sets are used to supplement a series of advanced warning signs and shall be installed and removed when the signs are installed and removed.
3. Remove the temporary rumble strips prior to removing the advance warning signs.

C:\d\projects\standards\roadway\00600-s\00600-04.dgn
rd960rh
2:07:25 PM
6/28/2012

LAST REVISION	REVISION	DESCRIPTION:		FDOT DESIGN STANDARDS 2013	GENERAL INFORMATION FOR TRAFFIC CONTROL THROUGH WORK ZONES	INDEX NO.	SHEET NO.
07/01/12						600	4

FLAGGER CONTROL

Where flaggers are used, a FLAGGER symbol or legend sign must replace the WORKERS symbol or legend sign.

The flagger must be clearly visible to approaching traffic for a distance sufficient to permit proper response by the motorist to the flagging instructions, and to permit traffic to reduce speed or to stop as required before entering the work site. Flaggers shall be positioned to maintain maximum color contrast between the Flagger's high-visibility safety apparel and equipment and the work area background.

Hand-Signaling Devices

STOP/SLOW paddles are the primary hand-signaling device. The STOP/SLOW paddle shall have an octagonal shape on a rigid handle. If the STOP/SLOW paddle is placed on a rigid staff, the minimum length of the staff, measured from the bottom of the paddle to the end of the staff that rests on the ground, should be 7 ft. STOP/SLOW paddles shall be at least 24 inches wide with letters at least 6 inches high and should be fabricated from light semirigid material. The background of the STOP face shall be red with white letters and border. The background of the SLOW face shall be orange with black letters and border. When used at night-time, the STOP/SLOW paddle shall be retroreflectorized.

Flag use is limited to immediate emergencies, intersections, and when working on the centerline or shared left turn lanes where two (2) flaggers are required and there is opposing traffic in the adjacent lanes. Flags, when used, shall be a minimum of 24 inches square, made of a good grade of red material, and securely fastened to a staff that is approximately 36 inches in length. When used at nighttime, flags shall be retroreflectorized red.

Flashlight, lantern or other lighted signal that will display a red warning light shall be used at night.

Flagger Stations

Flagger stations shall be located far enough in advance of the work space so that approaching road users will have sufficient distance to stop before entering the work space. When used at nighttime, the flagger station shall be illuminated.

SURVEY WORK ZONES

The SURVEY CREW AHEAD symbol or legend sign shall be the principal Advance Warning Sign used for Traffic Control Through Survey Work Zones and may replace the ROAD WORK AHEAD sign when lane closures occur, at the discretion of the Party Chief. Dual orange flags shall be used at all times to enhance the SURVEY CREW AHEAD sign, even with mesh signs.

When Traffic Control Through Work Zones is being used for survey purposes only, the END ROAD WORK sign as called for on certain 600 Series Indexes should be omitted.

Survey Between Active Traffic Lanes or Shared Left Turn Lanes

The following provisions apply to Main Roadway Traffic Control Work Zones. These provisions must be adjusted by the Party Chief to fit roadway and traffic conditions when the Survey Work Zone includes intersections.

(A) A STAY IN YOUR LANE (MOT-1-06) sign shall be added to the Advance Warning Sign sequence as the second most immediate sign from the work area.

(B) Elevation Surveys-Cones may be used at the discretion of the Party Chief to protect prism holder and flagger(s). Cones, if used, may be placed at up to 50' intervals along the break line throughout the work zone.

(C) Horizontal Control-With traffic flow in the same direction, cones shall be used to protect the backsight tripod and/or instrument. Cones shall be placed at the equipment, and up to 50' intervals for at least 200' towards the flow of traffic.

(D) Horizontal Control-With traffic flow in opposite directions, cones shall be used to protect the backsight tripod and/or instrument. Cones shall be placed at the equipment, and up to 50' intervals for at least 200' in both directions towards the flow of traffic.

SIGNS

SIGN MATERIALS

Mesh signs may be used only for Daylight Operations.

Vinyl signs may be used for Day or Night Operations not to exceed 1 day except as noted in the standards.

Rigid or Lightweight sign panels may be used in accordance with the vendor drawing for the sign stand to which they are attached.

INTERSECTING ROAD SIGNING

Signing for the control of traffic entering and leaving work zones by way of intersecting crossroads shall be adequate to make drivers aware of work zone conditions. If work operations exceed 60 minutes, intersection leg signing will be no less than the ROAD WORK AHEAD sign.

ADJOINING AND/OR OVERLAPPING WORK ZONE SIGNING

Adjoining work zones may not have sufficient spacing for standard placement of signs and other traffic control devices in their advance warning areas or in some cases other areas within their traffic control zones. Where such restraints or conflicts occur or are likely to occur, one of the following methods will be employed to avoid conflicts and prevent conditions that could lead to misunderstanding on the part of the traveling public as to the intended travel way by the traffic control procedure applied:

(A) For scheduled projects the engineer in responsible charge of project design will resolve anticipated work zone conflicts during the development of the project traffic control plan. This may entail revision of plans on preceding projects and coordination of plans on concurrent projects.

(B) Unanticipated conflicts arising between adjoining in progress highway construction projects will be resolved by the Resident Engineer for projects under his residency, and, by the District Construction Engineer for in progress projects under adjoining residencies.

(C) The District Maintenance Engineer will resolve anticipated and occurring conflicts within scheduled maintenance operations.

(D) The Unit Maintenance Engineer will resolve conflicts that occur within routine maintenance works; between routine maintenance work, unscheduled work and/or permitted work; and, between unit controlled maintenance works and highway construction projects.

SIGN COVERING AND INTERMITTENT WORK STOPPAGE SIGNING

Existing or temporary traffic control signs that are no longer applicable or are inconsistent with intended travel paths shall be removed or fully covered.

Sign blanks or other available coverings must completely cover the existing sign. Rigid sign coverings shall be the same size as the sign it is covering, and bolted in a manner to prevent movement.

Sign covers are incidental to work operations and are not paid for separately.

SIGNING FOR DETOURS, LANE SHIFTS AND DIVERSIONS

Detours should be signed clearly over their entire length so that motorists can easily determine how to return to the original roadway. The reverse curve (W1-4) warning sign should be used for the advanced warning for a lane shift. A diversion should be signed as a lane shift.

EXTENDED DISTANCE ADVANCE WARNING SIGN

Advance Warning Signs shall be used at extended distance of one-half mile or more when limited sight distance or the nature of the obstruction may require a motorist to bring their vehicle to a stop. Extended distance Advanced Warning Signs may be required on any type roadway, but particularly be considered on multilane divided highways where vehicle speed is generally in the higher range (45 MPH or more).

UTILITY WORK AHEAD SIGN

The UTILITY WORK AHEAD (W21-7) sign may be used as an alternate to the ROAD WORK AHEAD or the ROAD WORK XX FT (W20-1) sign for utility operations on or adjacent to a highway.

LENGTH OF ROAD WORK SIGN

The length of road work sign (G20-1) bearing the legend ROAD WORK NEXT_____ MILES is required for all projects of more than 2 miles in length. The number of miles entered should be rounded up to the nearest mile. The sign shall be located at begin construction points.

SPEEDING FINES DOUBLED WHEN WORKERS PRESENT SIGN

The SPEEDING FINES DOUBLED WHEN WORKERS PRESENT sign should be installed on all projects, but may be omitted if the work operation is less than 1 day. The placement should be 500 feet beyond the ROAD WORK AHEAD sign or midway to the next sign whichever is less.

GROOVED PAVEMENT AHEAD SIGN

The GROOVED PAVEMENT AHEAD sign is required 500 feet in advance of a milled or grooved surface open to traffic. The W8-15P placard shall be used in conjuction with the GROOVED PAVEMENT AHEAD sign.

END ROAD WORK SIGN

The END ROAD WORK sign (G20-2) should be installed on all projects, but may be omitted where the work operation is less than 1 day. The sign should be placed approximately 500 feet beyond the end of a construction or maintenance project unless other distance is called for in the plans. When other Construction or Maintenance Operations occur within 1 mile this sign should be omitted and signing coordinated in accordance with Index No. 600, ADJOINING AND/OR OVERLAPPING WORK ZONE SIGNING.

PROJECT INFORMATION SIGN

The Project information sign shall be installed when called for in the plans.

C:\d\projects\standards\roadway\00600-s\00600-05.dgn
rd960rh
2:07:27 PM
6/28/2012

GENERAL NOTES:

1. All signs shall be post mounted when work operations exceed one day except for:
   a. Road closure signs mounted in accordance with the vendor drawing for the Type III Barricade shown on the QPL.
   b. Pedestrian advanced warning or regulatory signs mounted on sign supports in accordance with the vendor drawing shown on the QPL.
2. If post mounting criteria cannot be achieved and a barrier or traffic railing exists, use Index 11871.

TEMPORARY SIGN SUPPORT NOTE:

1. Signs mounted on temporary supports or barricades, and barricade/sign combination shall be crashworthy in accordance with NCHRP 350 requirements and included on the Qualified Products List (QPL).

POST MOUNTED SIGN NOTES:

1. Use only approved systems listed on the Department's Qualified Products List.
2. Manufacturers seeking approval of U-Channel and steel square tube sign support assemblies for inclusion on the Qualified Products List (QPL) must submit a QPL application, design calculations (for square tube only), and detailed drawings showing the product meets all the requirements of this Index.
3. Provide 3 lb/ft Steel U-Channel Posts with a minimum section modulus of 0.43 in^3 for 60 ksi steel, a minimum section modulus of 0.37 in^3 for 70 ksi steel, or a minimum section modulus of 0.34 in^3 for 80 ksi steel.
4. Provide 4 lb/ft Steel U-Channel Posts with a minimum section modulus of 0.56 in^3 for 60 ksi steel, or a minimum section modulus of 0.47 in^3 for 70 ksi or 80 ksi steel.
5. U-channel posts shall conform with ASTM A 499, Grade 60, or ASTM A 576, Grade 1080 (with a minimum yield strength of 60 ksi). Square tube posts shall conform with ASTM A 653, Grade 50, or ASTM A 1011, Grade 50.
6. Sign attachment bolts, washers, nuts and spacers shall conform with ASTM A307 or A 36.
7. For diamond warning signs with supplement plaque (up to 5 ft^2 in area), use 4 lb/ft posts for up to 10 ft Clear Height (measure to the bottom of diamond warning sign).
8. Install 4 lb/ft Steel U-Channel Posts with approved breakaway splice in accordance with the manufacturer's detail shown on the QPL.
9. The contractor may install 3 lb/ft Steel U-Channel Posts with approved breakaway splice in accordance with the manufacturer's detail shown on the QPL.
10. Install all posts plumb.
11. The contractor may set posts in preformed holes to the specified depth with suitable backfill tamped securely on all sides, or drive 3 lb/ft sign posts and any size base post in accordance with the manufacturer's detail shown on the QPL.

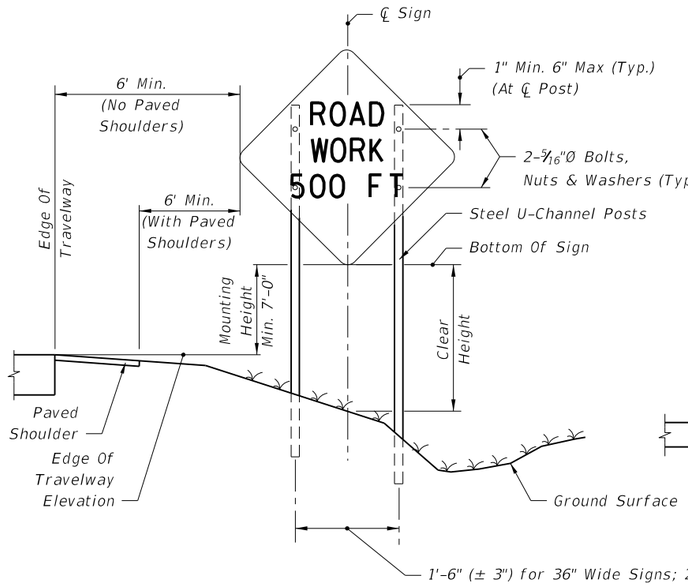

2 POST SIGN SUPPORT MOUNTING DETAILS
(SINGLE POST SIMILAR)
RURAL

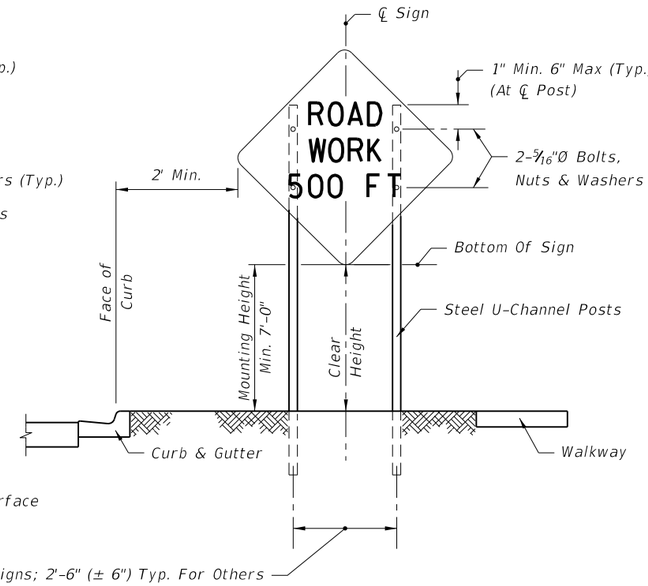

2 POST SIGN SUPPORT MOUNTING DETAILS
(SINGLE POST SIMILAR)
URBAN

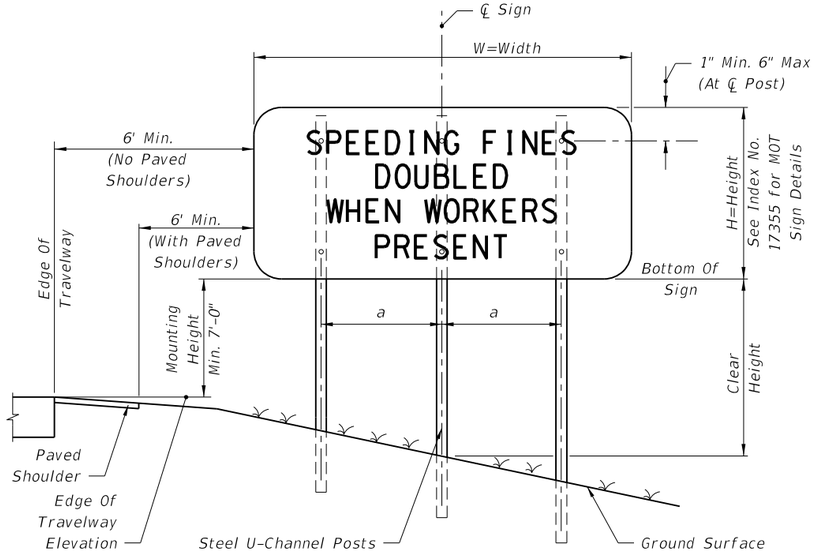

3 POST SIGN SUPPORT MOUNTING DETAILS

Where W = 48": a = 1' - 4½" (± 1")
W = 60": a = 1' - 9" (± 1")
W = 72": a = 2' - 1" (± 1")

WORK ZONE SIGN SUPPORTS

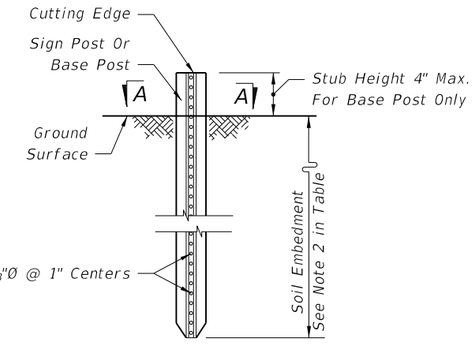

TYPICAL FOUNDATION DETAIL

See QPL for post, splice and connection details.
No bolts installed closer than 1" to cutting edge.

SECTION A-A
(SCHEMATIC)

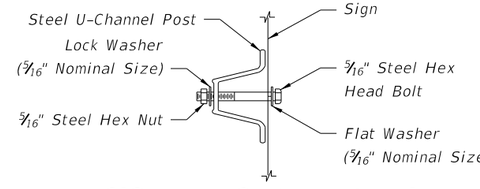

SIGN ATTACHMENT DETAIL
(WITHOUT Z-BRACKET)

POST AND FOUNDATION TABLE FOR WORK ZONE SIGNS

SIGN SHAPE	SIGN SIZE (inches)	NUMBER OF STEEL U CHANNEL POSTS
Octagon	30x30	1
Triangle	36x36x36	1
	48x48x48	1
	60x60x60	2
Rectangle (W x H)	24x18	1
	24x30	1
	30x24	1
	36x18	1
	36x24	1
	48x18	1
	36x48	2
	48x30	2
	48x36	2
	54x36	2
	48x60	3
	60x54	3
	72x48	3
	120x60*	4*
Square	30x30	1
	36x36	2
	48x48	2
Diamond (See Note 6)	48x48	2
Circle	36Ø	2

Notes For Table:

1. Use 3 lb/ft posts for Clear Height up to 10' and 4 lb/ft posts for Clear Height up to 12'.

* Use 4 lb/ft U-channel sign post with a mounting height of 7' min. and 8' max. Attach sign panel using Z-bracket detail on Sheet 7.

2. Minimum foundation depth is 4.0' for 3 lb/ft posts and 4.5' for 4 lb/ft posts.
3. For both 3 lb/ft and 4 lb/ft base or sign posts installed in rock, a minimum cumulative depth of 2' of rock layer is required.
4. The soil plate as shown on the QPL vendor drawing is not required for base posts or sign posts installed in existing rock (as defined in note 3), asphalt roadway, shoulder pavement or soil under sidewalk.

C:\d\projects\standards\roadway\00600-s\00600-06.dgn rd960rh 2:07:30 PM 6/28/2012

LAST REVISION	REVISION	DESCRIPTION:				
07/01/12			FDOT DESIGN STANDARDS 2013	GENERAL INFORMATION FOR TRAFFIC CONTROL THROUGH WORK ZONES	INDEX NO. 600	SHEET NO. 6

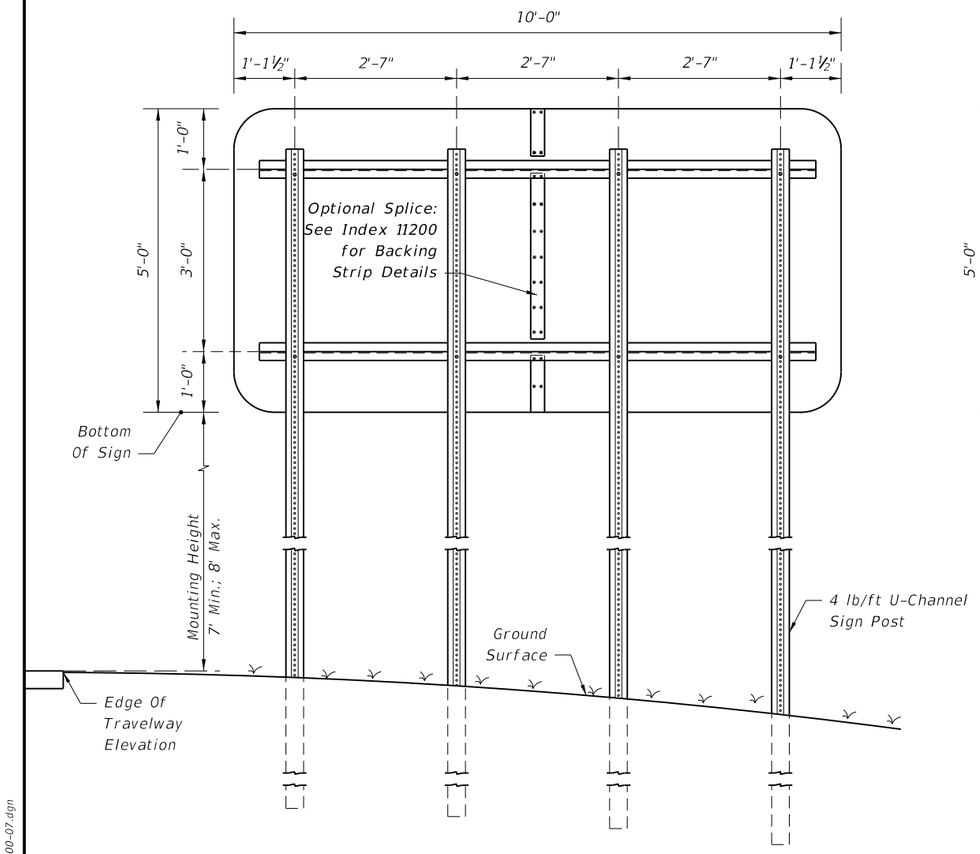

4 POST SIGN SUPPORT MOUNTING DETAIL

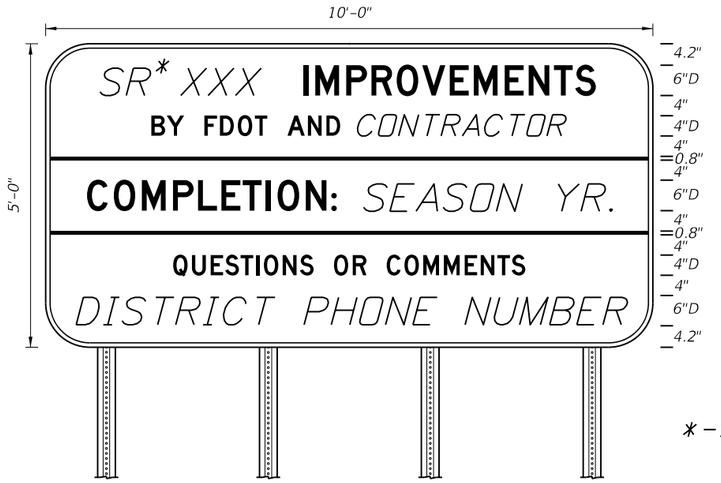

BORDER	10'-0"x 5'-0"
R=8"	8" Radii
TH=0.25"	4" and 6" series D Legend
IN=0.75"	Blue Background
	White Legend and Border

PROJECT INFORMATION SIGN DETAIL
50 MPH OR GREATER

Use SIGN ATTACHMENT DETAIL
(WITH Z-BRACKET).

*-See Note 1.

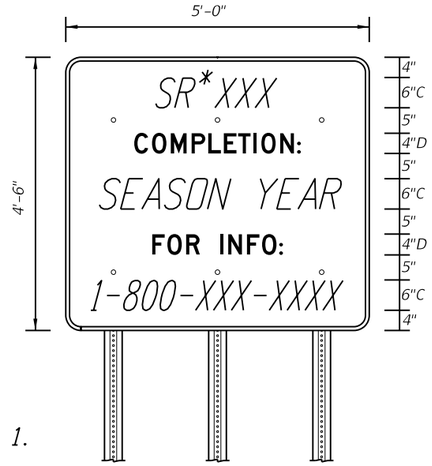

BORDER	5'-0"x 4-6"
R=3"	3" Radii
TH=0.25"	4" series D Legend and
IN=0.75"	6" series C Legend
	Blue Background
	White Legend and Border

PROJECT INFORMATION SIGN DETAIL
45 MPH OR LESS

Use SIGN ATTACHMENT DETAIL
(WITHOUT Z-BRACKET)
On Sheet 6.

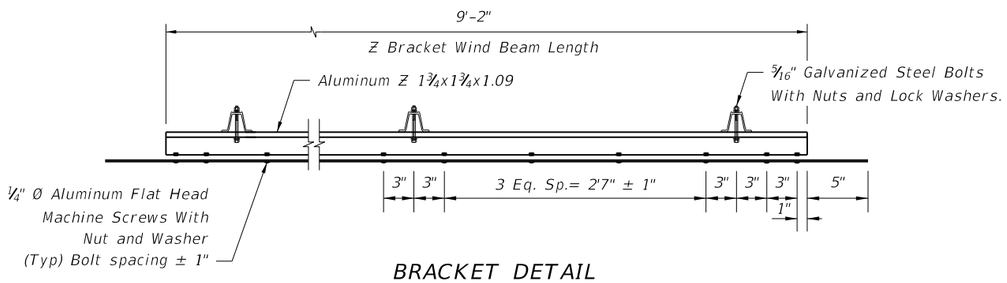

BRACKET DETAIL

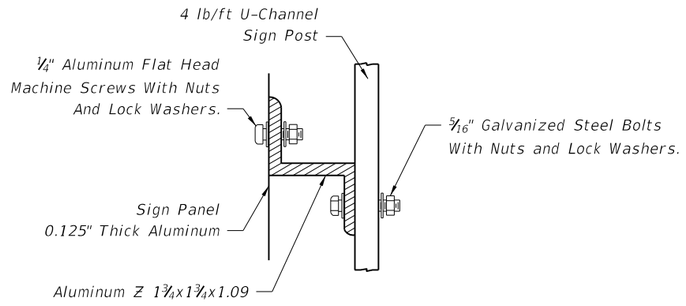

SIGN ATTACHMENT DETAIL
(WITH Z-BRACKET)

PROJECT INFORMATION SIGN NOTES:

1. Road designation should be the most common designation (ie. I-Interstate, SR-State Road or US.)
2. See sheet 6 for POST AND FOUNDATIONS TABLE FOR WORK ZONE SIGNS.
3. See sheet 6 for TYPICAL FOUNDATION DETAILS.
4. Payment for Project Information Sign shall be included in Lump Sum MOT.

PROJECT INFORMATION SIGN

C:\d\projects\standards\roadway\00600-s\00600-07.dgn rd960rh 2:07:32 PM 6/28/2012

LAST REVISION	REVISION	DESCRIPTION:				
01/01/12			FDOT DESIGN STANDARDS 2013	GENERAL INFORMATION FOR TRAFFIC CONTROL THROUGH WORK ZONES	INDEX NO. 600	SHEET NO. 7

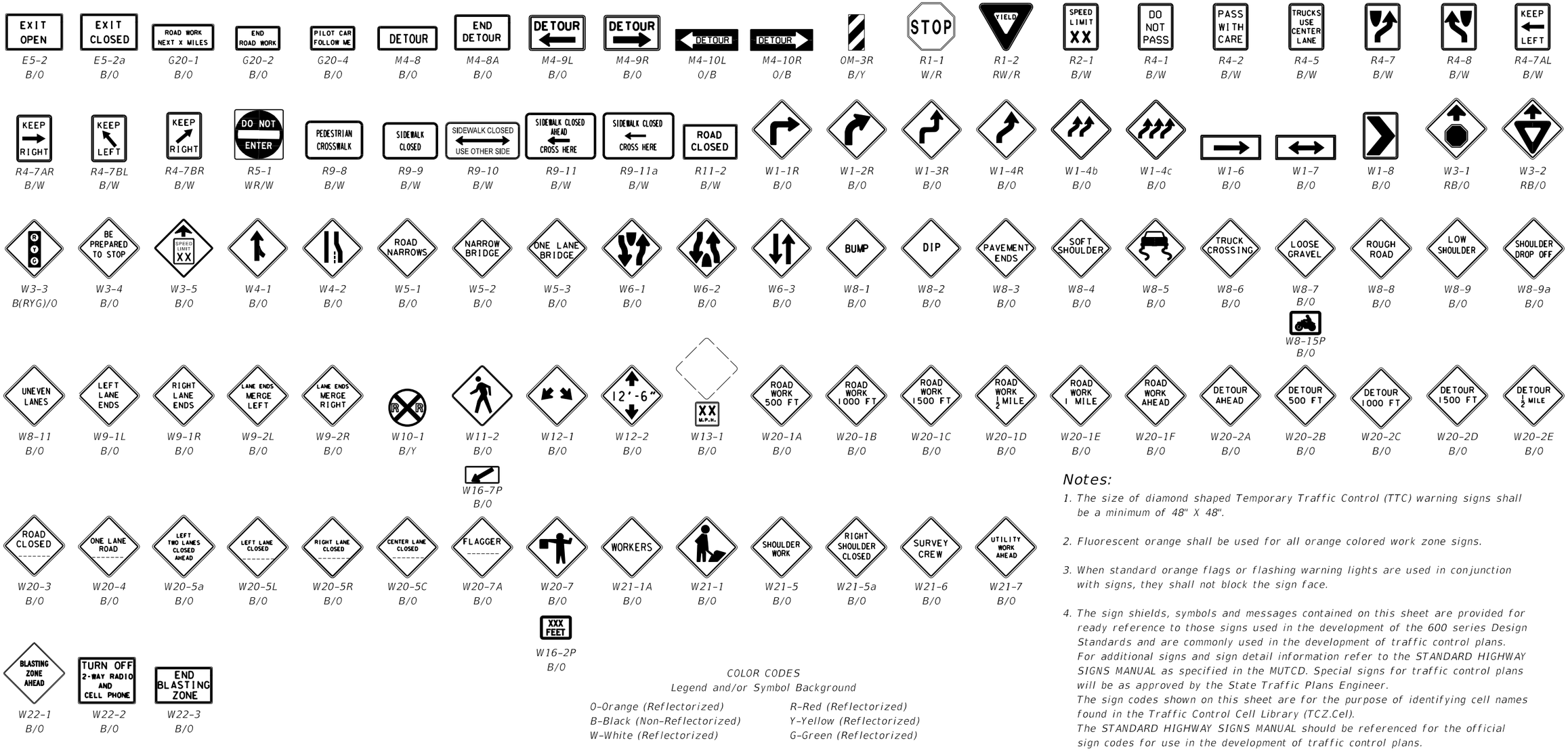

Notes:

1. The size of diamond shaped Temporary Traffic Control (TTC) warning signs shall be a minimum of 48" X 48".
2. Fluorescent orange shall be used for all orange colored work zone signs.
3. When standard orange flags or flashing warning lights are used in conjunction with signs, they shall not block the sign face.
4. The sign shields, symbols and messages contained on this sheet are provided for ready reference to those signs used in the development of the 600 series Design Standards and are commonly used in the development of traffic control plans. For additional signs and sign detail information refer to the STANDARD HIGHWAY SIGNS MANUAL as specified in the MUTCD. Special signs for traffic control plans will be as approved by the State Traffic Plans Engineer. The sign codes shown on this sheet are for the purpose of identifying cell names found in the Traffic Control Cell Library (TCZ.Cel). The STANDARD HIGHWAY SIGNS MANUAL should be referenced for the official sign codes for use in the development of traffic control plans. See Index No. 17355 for MOT sign details.

COLOR CODES
Legend and/or Symbol Background

O-Orange (Reflectorized)
B-Black (Non-Reflectorized)
W-White (Reflectorized)
R-Red (Reflectorized)
Y-Yellow (Reflectorized)
G-Green (Reflectorized)

COMMONLY USED WARNING AND REGULATORY SIGNS IN WORK ZONES

C:\d\projects\standards\roadway\00600-s\00600-08.dgn
rd960rh
2:07:34 PM
6/28/2012

LAST REVISION	REVISION	DESCRIPTION:				
01/01/11			FDOT DESIGN STANDARDS 2013	GENERAL INFORMATION FOR TRAFFIC CONTROL THROUGH WORK ZONES	INDEX NO. 600	SHEET NO. 8

MANHOLES/CROSSWALKS/JOINTS

Manholes extending 1" or more above the travel lane and crosswalks having an uneven surface greater than ¼" shall have a temporary asphalt apron constructed as shown in the diagram below.

All transverse joints that have a difference in elevation of 1" or more shall have a temporary asphalt apron constructed as shown in the diagram below.

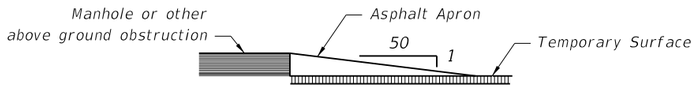

The apron is to be removed prior to constructing the next lift of asphalt. The cost of the temporary asphalt shall be included in the contract unit price for Maintenance of Traffic, LS.

TRUCK/TRAILER-MOUNTED ATTENUATORS

Truck/Trailer-mounted attenuators (TMA) can be used for moving operations and short-term stationary operations. For moving operations, see Index Nos. 607 and 619. For short-term, stationary operations, see Part VI of the MUTCD.

REMOVING PAVEMENT MARKINGS

Existing pavement markings that conflict with temporary work zone delineation shall be removed by any method approved by the Engineer, where operations exceed one daylight period. Painting over existing pavement markings with black paint or spraying with asphalt shall not be accepted as a substitute for removal or obliteration. Full pavement width overlays of either a structural or friction course are a positive means to achieve obliteration.

SIGNALS

Existing traffic signal operations that require modification in order to carry out work zone traffic control shall be included in the TCP and be approved by the District Traffic Operations Engineer.

Maintain all existing actuated or traffic responsive mode signal operations for main and side street movements for the duration of the Contract and require restoration of any loss of detection within 12 hours. The contractor shall select only detection technology listed on the Department's Approved Products List (APL) and approved by the Engineer to restore detection capabilities.

CHANNELIZING AND LIGHTING DEVICES

Channelizing and lighting devices for work zone traffic control shall be as prescribed in Part VI of the MUTCD, subject to supplemental revisions provided in the contract documents and Index 600 requirements.

CHANNELIZING AND LIGHTING DEVICE CONSISTENCY

Barricades, vertical panels, cones, tubular markers and drums shall not be intermixed within either the lateral transition or within the tangent alignment.

WARNING LIGHTS

Warning lights shall be in accordance with the MUTCD except for the application limitations stipulated below:

Flashing

Type A Low Intensity Flashing Warning Lights are to be mounted on barricades, drums, vertical panels or advance warning signs (except as noted below) and are intended to continually warn drivers that they are approaching or proceeding in a hazardous area. Flashing lights shall not be used to delineate the intended path of travel, and not placed with spacings that will form a continuous line to the drivers eye. The Type A light will be used to mark obstructions that are located adjacent to or in the intended travel way. Type A lights shall not be used in conjunction with the first advance warning sign nor the second such sign when used.

For post-mounted signs, Type B High Intensity Flashing Warning Lights shall be mounted on the first advanced warning sign and on the first and second advanced warning sign where two or more signs are used; this applies to all approaches to any work zone. The light shall be mounted on the channel post or on the upper edge of the sign nearest the traffic.

Type B High Intensity Flashing Warning Lights are not to be placed on temporary portable sign supports.

Steady-Burn

Type C Steady-Burn Lights are to be mounted on barricades, drums, concrete barrier walls or vertical panels and used in combination with those devices to delineate the travel way on lane closures, lane changes, diversion curves and other similar conditions. Steady-burn lights are intended to be placed in a line to delineate the travel way through and around obstructions in the transition, buffer, work and termination
areas of the traffic control zone. Their intended purpose is not for warning drivers that they are approaching or proceeding through a hazardous area.

STANDARD ORANGE FLAG

For post-mounted signs a standard orange flag 18"x 18" (min.) shall be mounted on the first advanced warning sign and on the first and second advanced warning sign where two or more signs are used; this applies to all approaches to any work zone. The flag shall be mounted on the channel post or on the upper edge of the sign furthest from traffic.

Standard orange flags are not to be placed on temporary portable sign supports except to enhance the SURVEY CREW AHEAD sign where dual orange flags shall be used at all times.

PORTABLE CHANGEABLE MESSAGE SIGNS (PCMS)

The PCMS can be used to:

1. Supplement standard signing in construction or maintenance work zones.
2. Reinforce static advance warning messages.
3 Provide motorists with updated guidance information.

PCMS should be placed approx. 500 to 800 feet in advance of the work zone conflicts or 1.5 to 2 miles in advance of complex traffic control schemes which require new and/or unusual traffic maneuvers.

If PCMS are to be used at night, the intensity of the flashers shall be reduced during darkness when lower intensities are desirable.

For additional information refer to the FDOT Plans Preparation Manual, Volume I, Chapter 10.

ADVANCE WARNING ARROW BOARDS

An arrow board in the arrow or chevron mode shall be used only for stationary or moving lane closures on multilane roadways.

For shoulder work, blocking the shoulder, for roadside work near the shoulder, or for temporarily closing one lane on a two-lane, two-way roadway, an arrow board shall be used only in the caution mode.

A single arrow board shall not be used to merge traffic laterally more than one lane. When arrow boards are used to close multiple lanes, a single board shall be used at the merging taper for each closed lane.

When Advance Warning Arrow Boards are used at night, the intensity of the flashers shall be reduced during darkness when lower intensities are desirable.

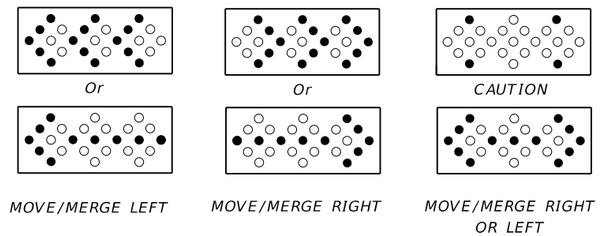

MODES

C:\d\projects\standards\roadway\00600-s\00600-09.dgn
rd960rh
2:07:36 PM
6/28/2012

DROP-OFF CONDITION NOTES

1. A drop-off is defined as a drop in elevation, parallel to the adjacent travel lanes, greater than 3" with slopes (A:B) steeper than 1:4. When drop-offs occur within the clear zone due to construction or maintenance activities, protection devices are required. See chart.

2. Distance X is to be the maximum practical under project conditions.

3. Distance from the travel lane to the barrier or warning device should be maximum practical for project conditions.

4. Any drop-off condition that is created and restored within the same work period will not be subject to the use of barriers; however, warning devices will be required.

5. When permanent curb heights are ≥ 6", no warning device will be required. For curb heights < 6", see chart.

DROP-OFF NOTES

1. These conditions and treatments can be applied only in work areas that fall within a properly signed work zone.

2. The following are defined as acceptable warning devices:
   a. Vertical panel
   b. Type I Or Type II barricades
   c. Drum
   d. Cone (where allowed)
   e. Tubular marker (where allowed)

3. Where a barrier is specified, any of the types below may be used in accordance with the applicable Index:

Index No.	Description
400	Temporary guardrail and end anchorage
412	Temporary low profile barrier
414	Type K temporary concrete barrier
415	Temporary concrete barrier

   For temporary water filled barriers see the QPL

4. Warning device spacing shall be as shown in Table I .

Table I
Device Spacing

Speed (mph)	Max. Distance Between Devices (ft)			
	Cones orTubular Markers		Type I or Type II Barricades or Vertical Panels or Drums	
	Taper	Tangent	Taper	Tangent
25	25	50	25	50
30 to 45	25	50	30	50
50 to 70	25	50	50	100

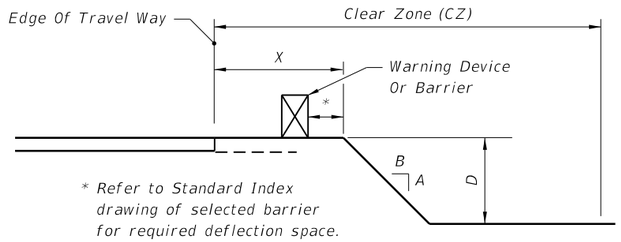

DROP-OFF PROTECTION REQUIREMENTS
ALL SPEEDS
NO CURB AND GUTTER

X (ft)	D (in.)	Device Required
0-12	> 3	Barrier
12-CZ	> 3 to ≤ 5	Warning Device
0-CZ	> 5	Barrier

For Clear Zone widths, see Index No. 600 sheet 3.

PEDESTRIAN AND/OR BICYCLIST WAY DROP-OFF CONDITION NOTES

1. A pedestrian and/or bicyclist way drop-off is defined as:

   a. a drop in elevation greater than 10 inches that is closer than 2 feet from the edge of the pedestrian or bicyclist way

   b. a slope steeper than 1:2 that begins closer than 2 feet from the edge of the pedestrian or bicyclist way when the total drop-off is greater than 60 inches.

2. Any drop-off adjacent to a pedestrian or bicyclist way shall be protected with warning devices, temporary barrier wall or approved handrail.

SHOULDER TREATMENT

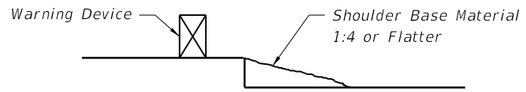

NOTES

1. Shoulder treatment may be used in lieu of barrier. Warning devices are required.

2. Daily inspections shall be conducted to assure that no erosion, excessive slopes, rutting, or other adverse conditions exist. Any deficiencies shall be repaired immediately.

3. Compensation for the placement and removal of the material required for the shoulder treatment shall be included in the cost for Maintenance Of Traffic, LS. Use of shoulder treatment in lieu of a barrier is not eligible for CSIP consideration.

TRAVEL LANE TREATMENT FOR MILLING OR RESURFACING

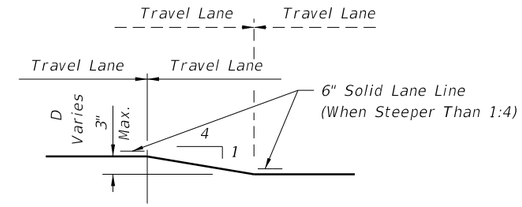

NOTES

1. This treatment applies to resurfacing or milling operations between adjacent travel lanes.

2. Whenever there is a difference in elevation between adjacent travel lanes, the W8-11 sign with "UNEVEN LANES" is required at intervals of ½ mile maximum.

3. If D is 1½" or less, no treatment is required.

4. Treatment allowed only when D is 3" or less.

5. If the slope is steeper than 1:4 (not to be steeper than 1:1), the R4-1 and MOT-1-06 signs shall be used as a supplement to the W8-11; this condition should never exceed 3 miles in length.

DROPOFFS IN WORK ZONES

C:\d\projects\standards\roadway\00600-s\00600-10.dgn
rd960rh
2:07:39 PM
6/28/2012

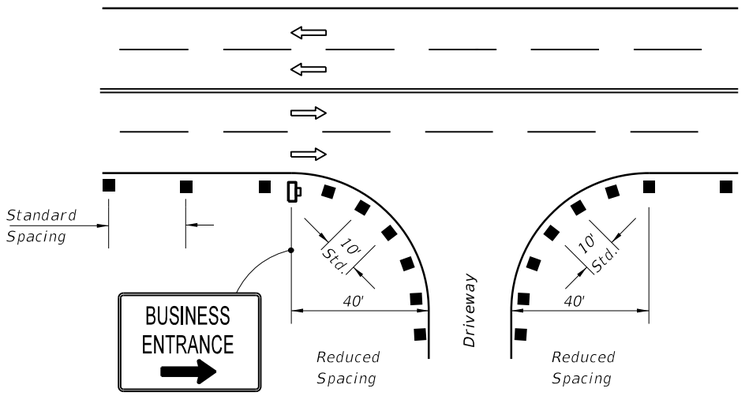

1. For single business entrances, place one 24" x 36" business sign for each driveway entrance affected. Signs shall show specific business names. Logos may be provided by business owners. Standard BUSINESS ENTRANCE sign in Index 17355 may be used when approved by the Engineer.

2. When several businesses share a common driveway entrance, place one 24" x 36" standard BUSINESS ENTRANCE sign according with Index 17355 at the common driveway entrance.

3. Channelizing devices shall be placed at a reduced spacing on each side of the driveway entrance, but shall not restrict sight distance for the driveway users.

4. Business entrance signs are intended to guide motorist to business entrances moved/modified or disturbed during construction projects. Business entrance signs are not required where there is minimal distruption to business driveways which is often the case with resurfacing type projects.

PLACEMENT OF BUSINESS ENTRANCE SIGNS AND CHANNELIZING DEVICES AT BUSINESS ENTRANCE

Table I
Device Spacing

Speed (mph)	Max. Distance Between Devices (ft.)			
	Tubular Markers		Vertical Panels or Opposing Traffic Lane Divider	
	Taper	Tangent	Taper	Tangent
25	25	50	25	50
30 to 45	25	50	30	50
50 to 70	25	50	50	100

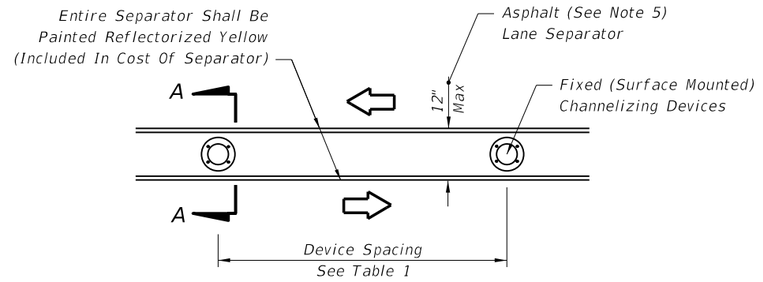

PLAN

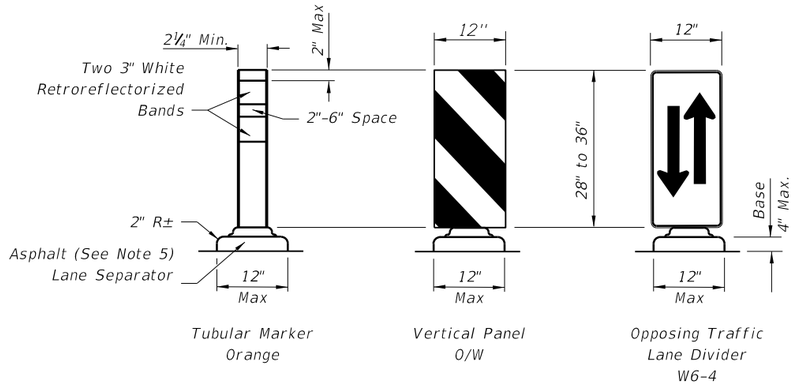

FIXED (SURFACE MOUNTED) CHANNELIZING DEVICES

SECTION AA

1. Temporary lane separators shall be supplemented with any of the following approved fixed (surface mounted) channelizing devices: tubular markers, vertical panels, or opposing traffic lane divider panels. Opposing traffic lane divider panels (W6-4) shall only be used as center lane dividers to separate opposing vehicular traffic on a two-lane, two-way operation. Tubular Markers, Vertical Panels and Opposing Traffic Lane Divider panels shall not be intermixed within the limits where the temporary lane separator is used. The connection between the channelizing device and the temporary lane separator curb shall hold the channelizing device in a vertical position.

2. Reflectorized materials shall have a smooth sealed outer surface which will display the same approximate color day and night. Furnish channelizing devices having retroreflective sheeting meeting the requirements of Section 990.

3. 12" openings for drainage shall be constructed in the asphalt and portable temporary lane separator at a maximum spacing of 25' in areas with grades of 1% or less or 50' in areas with grades over 1% as directed by the Engineer.

4. Tapered ends shall be used at the beginning and end of each run of the temporary lane separator to form a gradual increase in height from the pavement level to the top of the temporary lane separator.

5. The Contractor has the option of using portable temporary lane separators containing fixed channelizing devices in lieu of the temporary asphalt separator and channelizing devices detailed on this sheet. The portable temporary lane separator shall come in portable sections that can be connected to maintain continuous alignment between the separate curb sections. Each temporary lane separator section shall be 36 inches to 48 inches in total length. Portable temporary lane separators shall duplicate the color of the pavement marking. Portable temporary lane separators shall be one of those listed on the Qualified Products List.

6. Any damage to existing pavement caused by the removal of temporary lane separator shall be satisfactorily repaired and the cost of such repairs are to be included in the cost of Maintenance of Traffic, LS.

TEMPORARY LANE SEPARATOR

C:\d\projects\standards\roadway\00600-s\00600-11.dgn
rd960rh
2:07:41 PM
6/28/2012

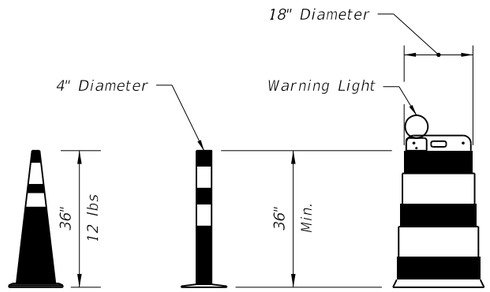

CONES TUBULAR MARKER PLASTIC DRUMS

TUBULAR NON-FIXED MARKER TO BE USED DURING DAYLIGHT ONLY

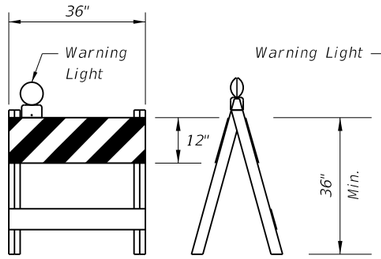

TYPE I BARRICADE

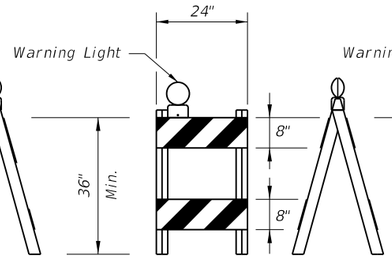

TYPE II BARRICADE

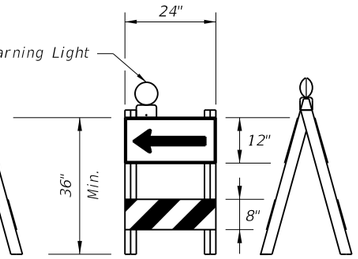

DIRECTION INDICATOR BARRICADE

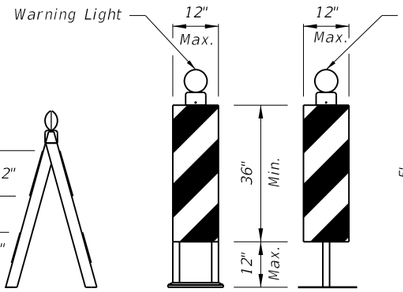

A-FRAME POST MOUNT

VERTICAL PANEL

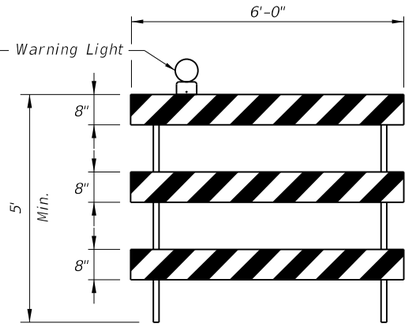

TYPE III BARRICADE

CHANNELIZING AND LIGHTING DEVICE NOTES

1. The details shown on this sheet are for the following purposes:

   (a) For ease of identification and
   (b) To provide information that supplements or supersedes that provided by the MUTCD.

2. The Type III Barricade shall have a unit length of 6'-0" only. When barricades of greater lengths are required those lengths shall be in multiples of the 6'-0" unit.

3. No sign panel should be mounted on any channelizing device unless the channelizing device/sign combination was found to be crashworthy and the sign panel is mounted in accordance with the vendor drawing for the channelizing device shown on the QPL.

4. During hours of darkness, warning lights shall be used on LCDs, drums, vertical panels, Type I, Type II, Type III, and direction indicator barricades in accordance with 'Warning Lights' in Index No. 600.

5. Ballast shall not be placed on top rails or any striped rails or higher than 13" above the driving surface.

6. The direction indicator barricade may be used in tapers and transitions where specific directional guidance to drivers is necessary. If used, direction indicator barricades shall be used in series to direct the driver through the transition and into the intended travel lane.

7. The splicing of sheeting is not permitted on either channelizing devices or MOT signs.

8. For rails less than 3'-0" long, 4" stripes shall be used.

9. Cones shall:

   a. Be used only in active work zones where workers are present.
   b. Not exceed 2 miles in length of use at any one time.
   c. Be reflectorized as per the MUTCD with Department approved reflective collars when used at night.

10. Spacing for longitudinal channelizing devices when placed singly shall be the same as Type I or Type II barricades or drums.

11. For longitudinal channelizing devices (LCDs) less than 32" in height, the LCD shall be supplemented with approved fixed (surface mounted) channelizing devices (tubular markers, vertical panels, etc.) along the run of the LCD, at the ends, at 50' centers on tangents, and 25' centers on radii. The cost of the fixed supplemented channelizing devices shall be included in the cost of the LCD. LCDs less than 32" in height shall not be used for speeds greater than 45 mph.

12. For pedestrian longitudinal channelizing devices, the device shall have a minimum of 8" continuous detectable edging above the walkway. A gap not exceeding a height of 2" is allowed to facilitate drainage. The top surface of the device shall be a minimum height of 32" and have smooth connection points between the devices to facilitate hand trailing. The bottom and the top surface of the device shall be in the same vertical plane. If pedestrian drop-off protection is required, the device shall have a footprint or offset of at least 2', otherwise the device must be at least 42" in height above the walkway and be anchored or ballasted to withstand a 200 lb lateral point load at the top of the device.

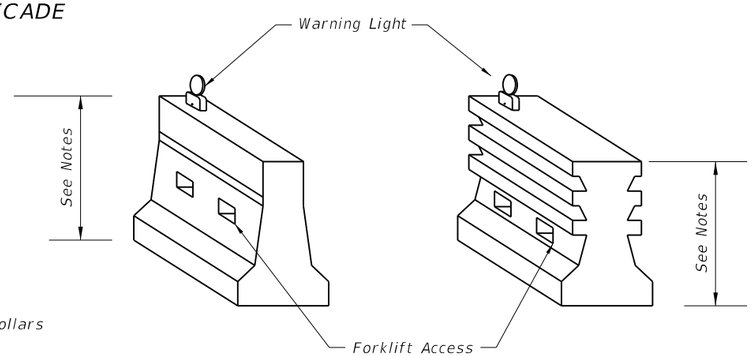

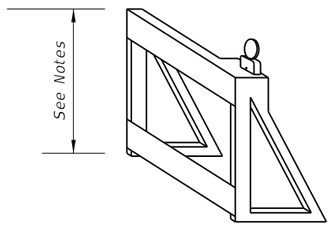

LONGITUDINAL CHANNELIZING DEVICE

IDENTIFICATIONS - CHANNELIZING AND LIGHTING DEVICES

LAST REVISION	REVISION	DESCRIPTION:		FDOT DESIGN STANDARDS 2013	GENERAL INFORMATION FOR TRAFFIC CONTROL THROUGH WORK ZONES	INDEX NO.	SHEET NO.
07/01/12						600	12

C:\d\projects\standards\roadway\00600-s\00600-12.dgn rd960rh 2:07:43 PM 6/28/2012

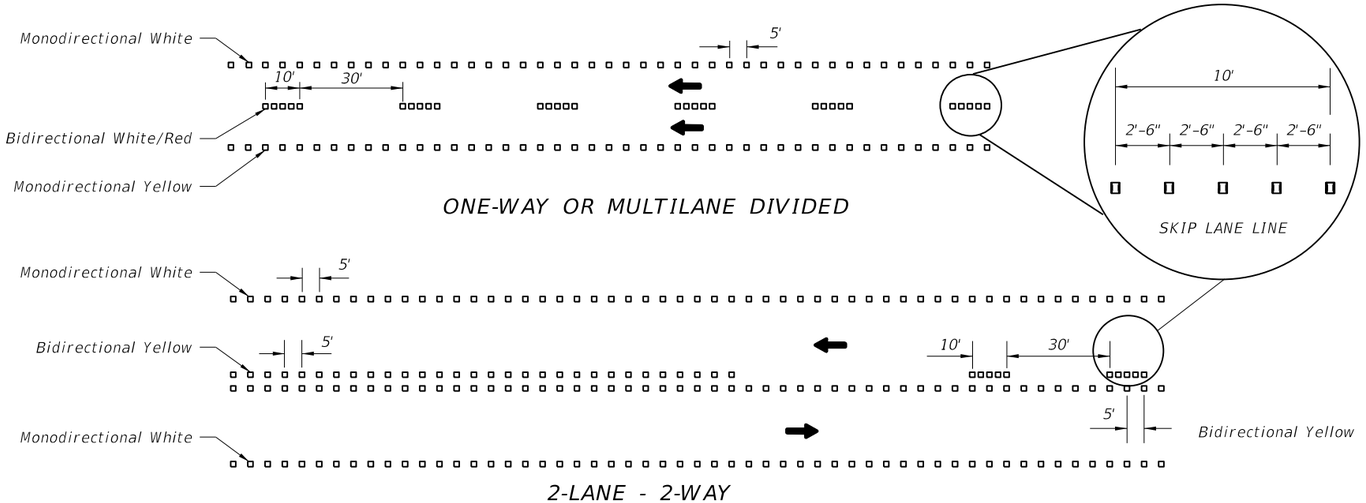

TEMPORARY SUBSTITUTION OF RPM'S FOR PAINT OR REMOVABLE TAPE

1. Paint or removable tape are the required work zone markings and shall be placed in accordance with the plans and specifications. If these work zone markings can not be placed due to weather restrictions identified in the appropriate specification, temporary substitution of RPM's for work zone markings will be allowed until the weather condition permits the placement of appropriate work zone marking. Temporary substitution of RPM's for work zone markings will be allowed for equipment malfunction, placement of the appropriate work zone marking shall be made within 3 days, or sooner if possible. When RPM's are used as a temporary substitution for work zone markings the following shall apply:

   a. Lane widths identified in the plans must be maintained. Placement of RPM's should consider where work zone markings will be placed as soon as conditions allow. If the RPM's can not be placed so that the lane width is maintained after the placement of the work zone markings, the conflicting RPM's must be removed.

   b. The color of the RPM body and the reflective face shall conform to the color of the marking for which they substitute.

   c. In work zones, CLASS A, B or D RPM's may be used to form lane lines, edge lines and temporary gore areas as a temporary substitute for paint or removable tape at the spacing shown above. Where the RPM's will be used for five (5) days or less, CLASS E RPM's may be used.

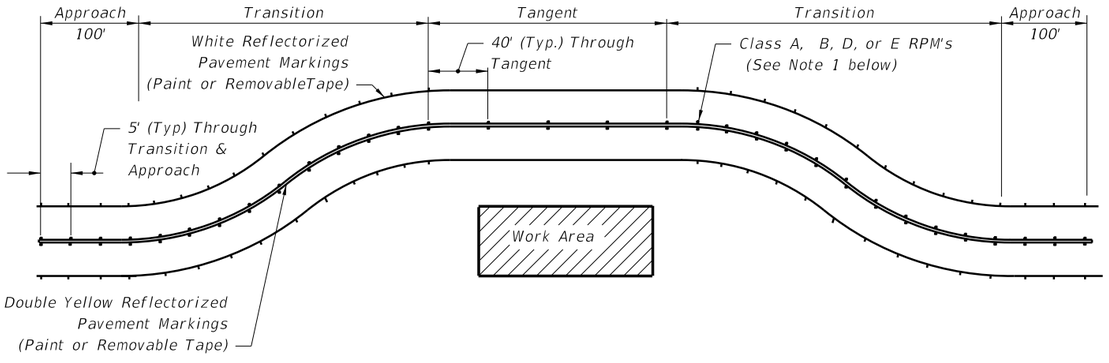

USE OF RPMS TO SUPPLEMENT PAINT OR REMOVABLE TAPE IN WORK ZONES

1. RPM's shall be installed as a supplement to:
   a. All lane lines.
   b. Edge lines in transition & approach areas.
   c. Edge lines of gore areas.
2. Placement of RPM's should be as shown in Index No. 17352 with the following exceptions:
   RPM's shall be placed at 5 feet center to center in approach and transition areas.
   Class D markers be placed at a maximum spacing of 5 feet center to center.

RPM CLASS	APPLICATION FOR REFLECTIVE PAVEMENT MARKERS
A	Work Zone Applications Only, For Traffic And Nontraffic Areas.
B	Permanent Application In Traffic And Nontraffic Areas Or Can Be Used In Work Zone Applications For Traffic And Nontraffic Areas.
D	Work Zone Application Only, For Traffic And Nontraffic Areas.
E	Temporary Work Zone Application Only, Not Exceeding Five (5) Continuous Days, For Traffic And Nontraffic Areas.

NOTES FOR REFLECTIVE PAVEMENT MARKERS

1. The color of the raised pavement marker under both day and night conditions shall conform to the color of the marking for which they serve as a positioning guide, or for which they supplement or substitute.

2. To provide contrast on concrete pavement, or light asphalt, the five (5) white RPM's shall be followed by five black RPM's. The spacing between RPM's shall be 2'-6". Black RPM's will not be required for contrast with yellow RPM's.

3. RPM's used to supplement lane lines are to be paid for as Reflective Pavement Marker (Temporary), EA. RPM's used as a temporary substitute for paint or removable tape due to weather restrictions are to be paid for as Reflective Pavement Marker (Temporary), EA. RPM's used as a temporary substitute for paint or removable tape due to equipment malfunction are to be placed at the Contractor's expense.

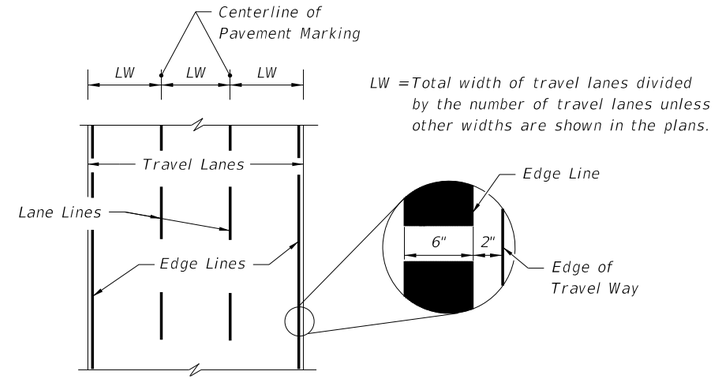

PLACEMENT OF PAVEMENT MARKINGS

PAVEMENT MARKINGS

C:\d\projects\standards\roadway\00600-s\00600-13.dgn
rd960rh
2:07:45 PM
6/28/2012

LAST REVISION	REVISION	DESCRIPTION:			INDEX NO.	SHEET NO.
07/01/09			FDOT DESIGN STANDARDS 2013	GENERAL INFORMATION FOR TRAFFIC CONTROL THROUGH WORK ZONES	600	13

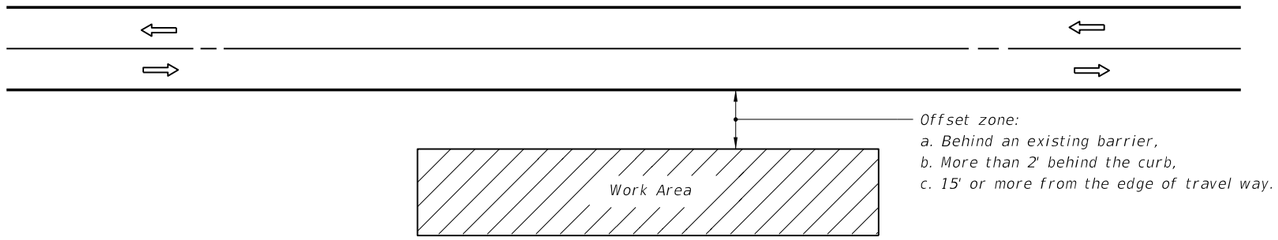

SYMBOLS

Work Area

Lane Identification + Direction of Traffic

GENERAL NOTES

1. If the work operation (excluding establishing and terminating the work area) requires that two or more work vehicles cross the offset zone in any one hour, traffic control will be in conformance with Index No. 602.
2. No special signing is required.
3. When a side road intersects the highway within the work area, additional TTC devices shall be placed in accordance with other applicable TCZ Indexes.
4. When construction activities encroach on a sidewalk refer to Index No. 660.
5. For general TCZ requirements and additional information, refer to Index No. 600.

CONDITIONS

WHERE ANY VEHICLE, EQUIPMENT, WORKERS AND THEIR ACTIVITIES ARE BEHIND AN EXISTING BARRIER, MORE THAN 2' BEHIND THE CURB, OR 15' OR MORE FROM THE EDGE OF TRAVEL WAY.

C:\d\projects\standards\roadway\00600-s\00601-01.dgn
6/28/2012 2:07:48 PM rd960rh

LAST REVISION	REVISION	DESCRIPTION:		FDOT DESIGN STANDARDS 2013	TWO-LANE, TWO-WAY, WORK OUTSIDE SHOULDER	INDEX NO.	SHEET NO.
07/01/05						601	1

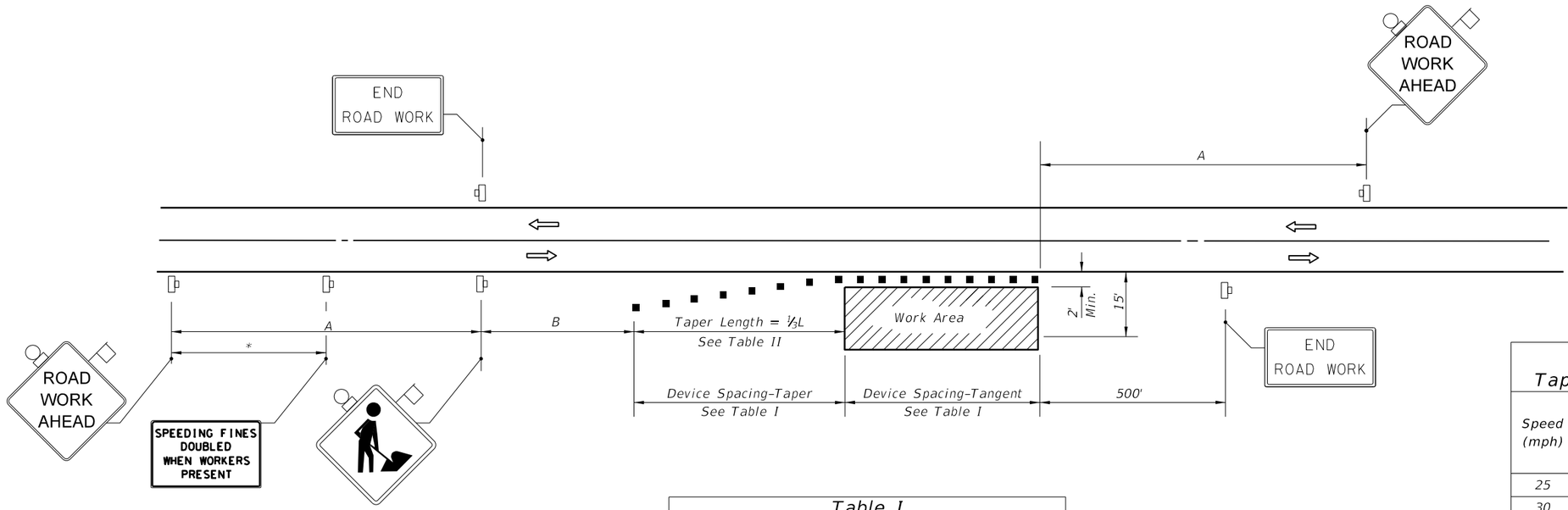

Table I
Device Spacing

Speed (mph)	Max. Distance Between Devices (ft.)			
	Cones or Tubular Markers		Type I or Type II Barricades or Vertical Panels or Drums	
	Taper	Tangent	Taper	Tangent
25	25	50	25	50
30 to 45	25	50	30	50
50 to 70	25	50	50	100

Table II
Taper Length - Shoulder

Speed (mph)	1/3L (ft)			Notes
	8' Shldr.	10' Shldr.	12' Shldr.	
25	28	35	42	$L=\frac{WS^2}{60}$
30	40	50	60	
35	55	68	82	
40	72	90	107	
45	120	150	180	L=WS
50	133	167	200	
55	147	183	220	
60	160	200	240	
65	173	217	260	
70	187	233	280	

8' minimum shoulder width

1/3L = Length of shoulder taper in feet

W = Width of total shoulder in feet (combined paved and unpaved width)

S = Posted speed limit (mph)

DISTANCE BETWEEN SIGNS

Speed	Spacing (ft.)	
	A	B
40 mph or less	200	200
45 mph	350	350
50 mph or greater	500	500

*Midway between signs.

SYMBOLS

- Work Area
- Sign With 18" x 18" (Min.) Orange Flag And Type B Light
- Channelizing Device (See Index No. 600)
- Work Zone Sign
- Lane Identification + Direction of Traffic

GENERAL NOTES

1. When four or more work vehicles enter the through traffic lanes in a one hour period or less (excluding establishing and terminating the work area), the advanced FLAGGER sign shall be substituted for the WORKERS sign. For location of flaggers and FLAGGER signs, see Index No. 603.
2. SHOULDER WORK sign may be used as an alternate to the WORKER symbol sign only on the side where the shoulder work is being performed.
3. When a side road intersects the highway within the TTC zone, additional TTC devices shall be placed in accordance with other applicable TCZ Indexes.
4. For general TCZ requirements and additional information, refer to Index No. 600.

DURATION NOTES

1. Signs and channelizing devices may be omitted if all of the following conditions are met:
   a. Work operations are 60 minutes or less.
   b. Vehicles in the work area have high-intensity, rotating, flashing, oscillating, or strobe lights operating.

CONDITIONS

WHERE ANY VEHICLE, EQUIPMENT, WORKERS OR THEIR ACTIVITIES ENCROACH THE AREA CLOSER THAN 15' BUT NOT CLOSER THAN 2' TO THE EDGE OF TRAVEL WAY.

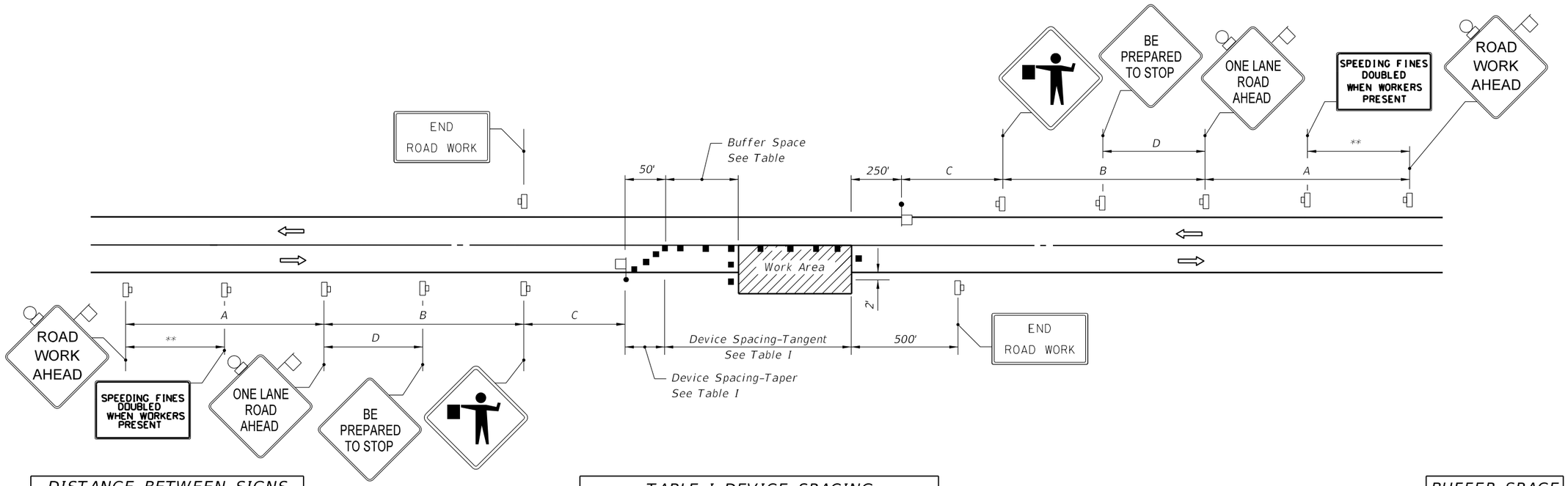

DISTANCE BETWEEN SIGNS

Speed (mph)	Spacing (ft.)			
	A	B	C	D
40 or less	200	200	200	100
45	350	350	350	175
50	500	500	500	250
55 or greater	2640	1640	1000	500

* The ROAD WORK 1 MILE sign may be used as an alternate to the ROAD WORK AHEAD sign.

** 500' beyond the ROAD WORK AHEAD sign or midway between signs whichever is less.

*** BE PREPARED TO STOP sign may be omitted for speeds of 45 MPH or less.

SYMBOLS

- Work Area
- Sign With 18" x 18" (Min.) Orange Flag And Type B Light
- Channelizing Device (See Index No. 600)
- Work Zone Sign
- Flagger
- Automated Flagger Assistance Devices (AFAD), With Gate
- Lane Identification + Direction of Traffic

TABLE I DEVICE SPACING

Speed (mph)	Max. Distance Between Devices (ft.)			
	Cones or Tubular Markers		Type I or Type II Barricades or Vertical Panels or Drums	
	Taper	Tangent	Taper	Tangent
25 to 45	20	50	20	50
50 to 70	20	50	20	100

GENERAL NOTES

1. Work operations shall be confined to one traffic lane, leaving the opposite lane open to traffic.

2. Additional one-way control may be effected by the following means:
   1. Flag-carrying vehicle;
   2. Official vehicle;
   3. Pilot vehicles;
   4. Traffic signals.

   When flaggers are the sole means of one-way control, the flaggers shall be in sight of each other or in direct communication at all times.

3. The ONE-LANE ROAD signs are to be fully covered and the FLAGGER signs either removed or fully covered when no work is being performed and the highway is open to two-way traffic.

4. When a side road intersects the highway within the TTC zone, additional TTC devices shall be placed in accordance with other applicable TCZ Indexes.

5. The two channelizing devices directly in front of the work area and the one channelizing device directly at the end of the work area may be omitted provided vehicles in the work area have high-intensity rotating, flashing, oscillating, or strobe lights operating.

6. For general TCZ requirements and additional information, refer to Index No. 600.

DURATION NOTES

1. ROAD WORK AHEAD and the BE PREPARED TO STOP signs may be omitted if all of the following conditions are met:
   a. Work operations are 60 minutes or less.
   b. Speed limit is 45 mph or less.
   c. No sight obstructions to vehicles approaching the work area for a distance equal to the buffer space.
   d. Vehicles in the work area have high-intensity, rotating, flashing, oscillating, or strobe lights operating.
   e. Volume and complexity of the roadway has been considered.

BUFFER SPACE

Speed (mph)	Dist. (ft.)
25	155
30	200
35	250
40	305
45	360
50	425
55	495
60	570
65	645
70	730

When Buffer Space cannot be attained due to geometric constraints, the greatest attainable length shall be used, but not less than 200 ft.

CONDITIONS

WHERE ANY VEHICLE, EQUIPMENT, WORKERS OR THEIR ACTIVITIES ENCROACH THE AREA BETWEEN THE CENTERLINE AND A LINE 2' OUTSIDE THE EDGE OF TRAVEL WAY.

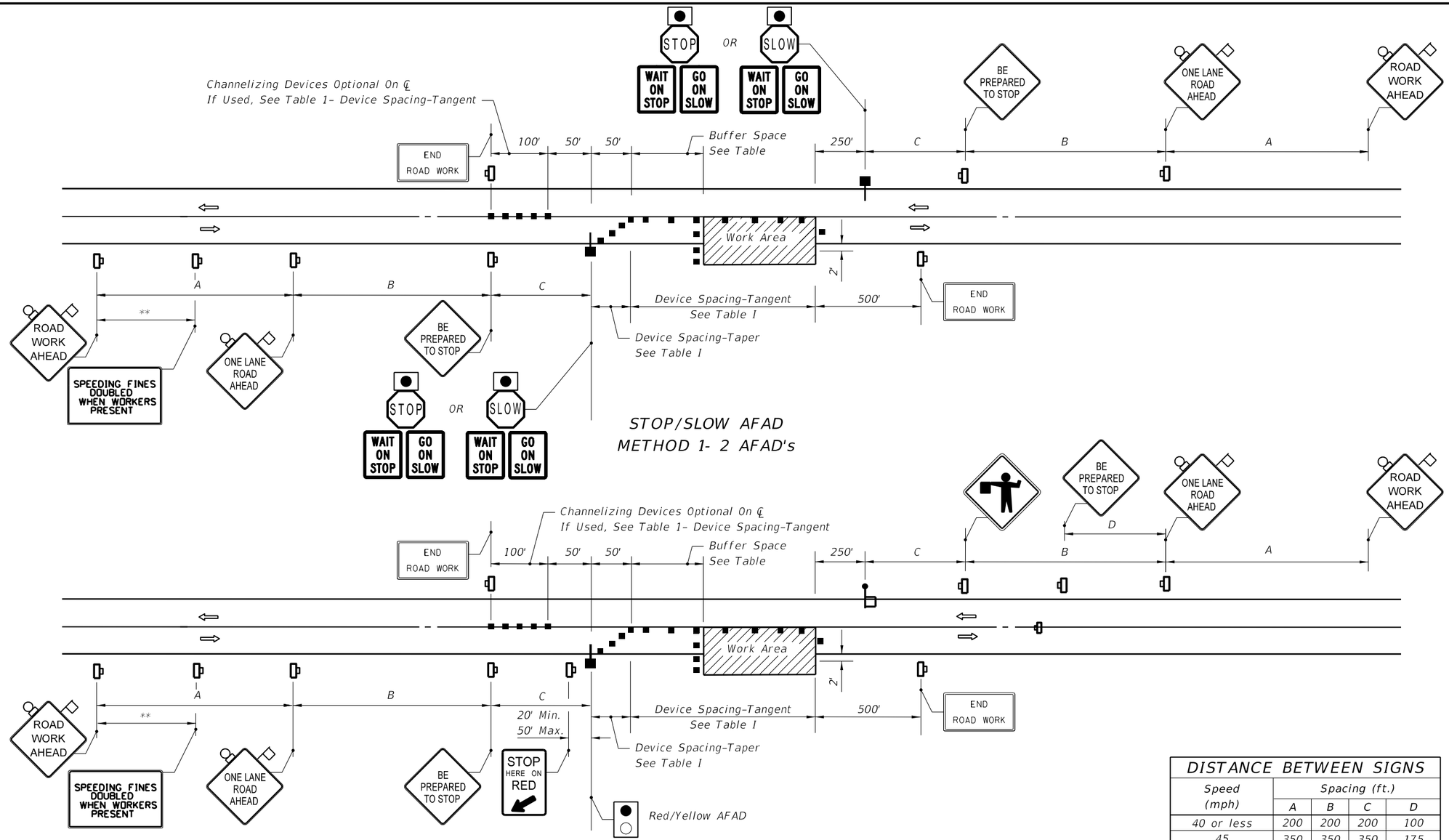

STOP/SLOW AFAD
METHOD 1- 2 AFAD's

RED/YELLOW AFAD
METHOD 2- 1 AFAD AND A FLAGGER

DISTANCE BETWEEN SIGNS				
Speed (mph)	Spacing (ft.)			
	A	B	C	D
40 or less	200	200	200	100
45	350	350	350	175
50	500	500	500	250
55 or greater	2640	1640	1000	500

* (See Sheet 1 Notes)
** (See Sheet 1 Notes)

AUTOMATED FLAGGER ASSISTANCE DEVICES (AFAD) NOTES

1. AFAD's shall only be used in situations where there is only one lane of approaching traffic in the direction to be controlled.
2. When used at nighttime, the AFAD flagging station shall be illuminated.
3. When the AFAD is not in use, it shall be moved outside the clear zone or be shielded by a barrier or crash cushion and the signs associated with the AFAD shall be removed or covered.
4. Duration Notes shown on sheet 1 of 2 do not apply when AFAD are used.
5. Only qualified flaggers who have been trained in the operation of the AFAD may operate the AFAD. When in use, each AFAD must be in view of and attended at all times by the flagger operating the device. Use two flaggers and one of the following methods in the deployment of AFAD:
   Method 1: Place an AFAD at each end of the temporary traffic control zone.
   Method 2: Place an AFAD at one end of the temporary traffic control zone and a flagger at the opposite end.

A single flagger may simultaneously operate two AFAD (Method 1) or may operate a single AFAD on one end of the temporary traffic control zone while being the flagger at the opposite end of the temporary traffic control zone (Method 2) if all four of the following conditions are present:

a. The flagger has an unobstructed view of the AFAD(s);
b. The flagger has an unobstructed view of approaching traffic in both directions; and
c. For Method 1, the AFAD's are less than 800 ft apart. For Method 2, the AFAD and the flagger are less than 800 ft apart.
d. Ensure two trained flaggers are available on-site to provide normal flagging operations should an AFAD malfunction.

C:\d_projects\standards\roadway\00600-s\00603-02.dgn rd960rh 2:07:54 PM 6/28/2012

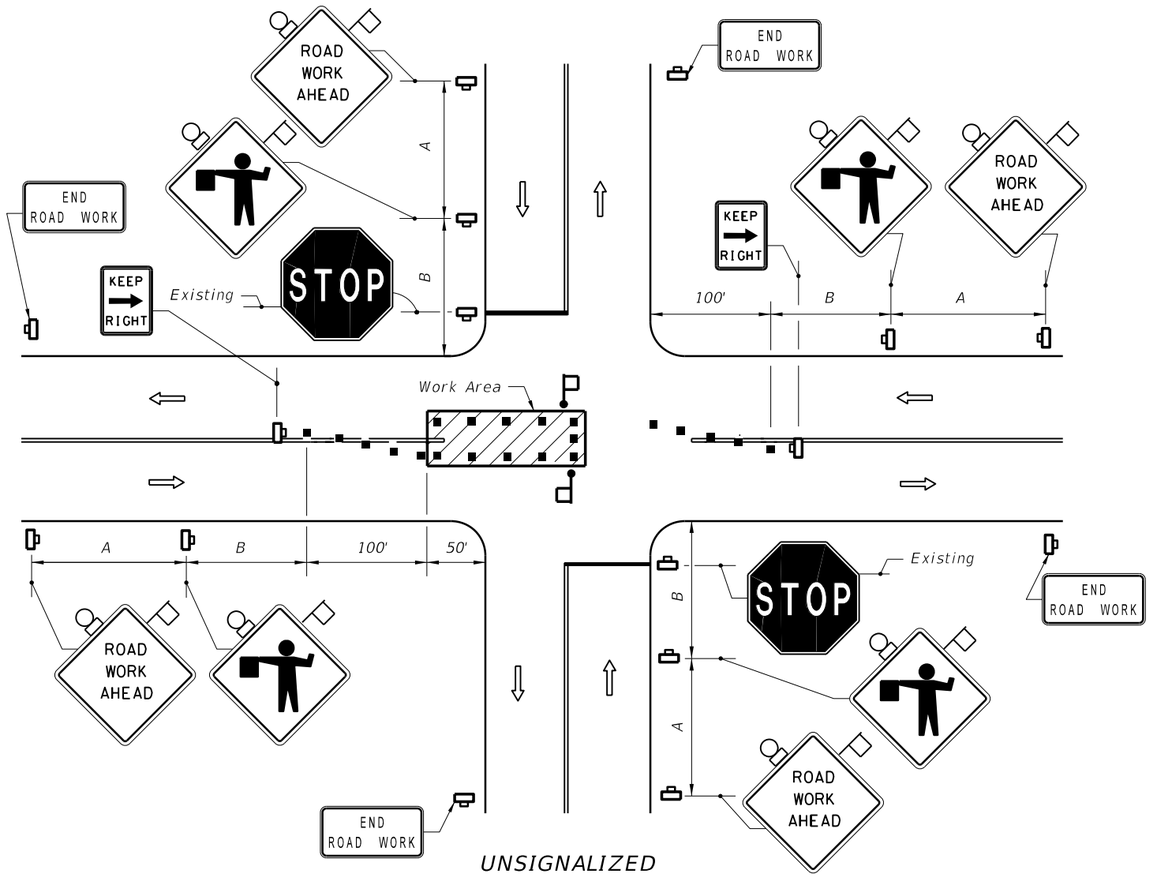

UNSIGNALIZED

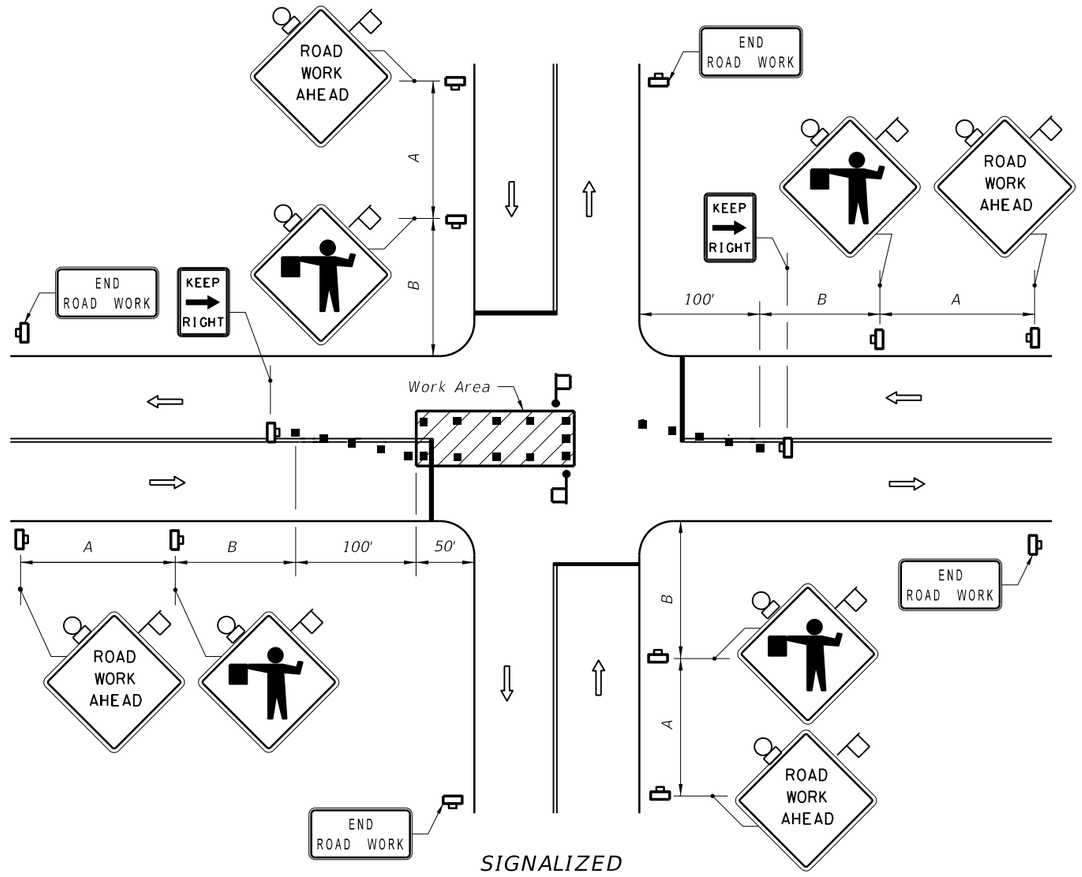

SIGNALIZED

SYMBOLS

- Work Area
- Sign With 18" x 18" (Min.) Orange Flag And Type B Light
- Channelizing Device (See Index No. 600)
- Work Zone Sign
- Flagger
- Stop Bar
- Lane Identification + Direction of Traffic

GENERAL NOTES

1. The FLAGGER legend sign may be substituted for the symbol sign.
2. When vehicles in a parking zone block the line of sight to TCZ signs, the signs shall be post mounted and located in accordance with Index No. 17302.
3. If the work space extends across a crosswalk, the crosswalk should be closed using the information in Index No. 660.
4. Flaggers shall be located where they can control more than one direction of traffic.

   Flaggers shall be in sight of each other or in direct communication at all times.
5. Maximum spacing between channelizing devices shall be not greater than 20'.
6. Temporary signal phasing modifications are to be approved by the District Traffic Operations Engineer prior to the beginning of work.
7. For general TCZ requirements and additional information, refer to Index No. 600.

DURATION NOTES

1. ROAD WORK AHEAD AND END ROAD WORK sign may be omitted if all of the following conditions are met:
   a. Work operations are 60 minutes or less.
   b. Speed is 45 mph or less.
   c. No sight obstructions to vehicles approaching the work area for a distance equal to A plus B.
   d. Vehicles in the work area have high-intensity, rotating, flashing, oscillating, or strobe lights operating.
   e. Volume and complexity of the roadway has been considered.

DISTANCE BETWEEN SIGNS

Speed	Spacing (ft.)	
	A	B
40 mph or less	200	200
45 mph	350	350

CONDITIONS

WHERE ANY VEHICLE, EQUIPMENT, WORKERS OR THEIR ACTIVITIES ENCROACH ON THE PAVEMENT REQUIRING THE CLOSURE OF A PORTION OF ONE OR MORE TRAFFIC LANES IN AN INTERSECTION.

C:\d\projects\standards\roadway\00600-s\00604-01.dgn
rd960rh
2:07:56 PM
6/28/2012

LAST REVISION	REVISION	DESCRIPTION:			INDEX NO.	SHEET NO.
07/01/09			FDOT DESIGN STANDARDS 2013	TWO-LANE, TWO-WAY, WORK IN INTERSECTION	604	1

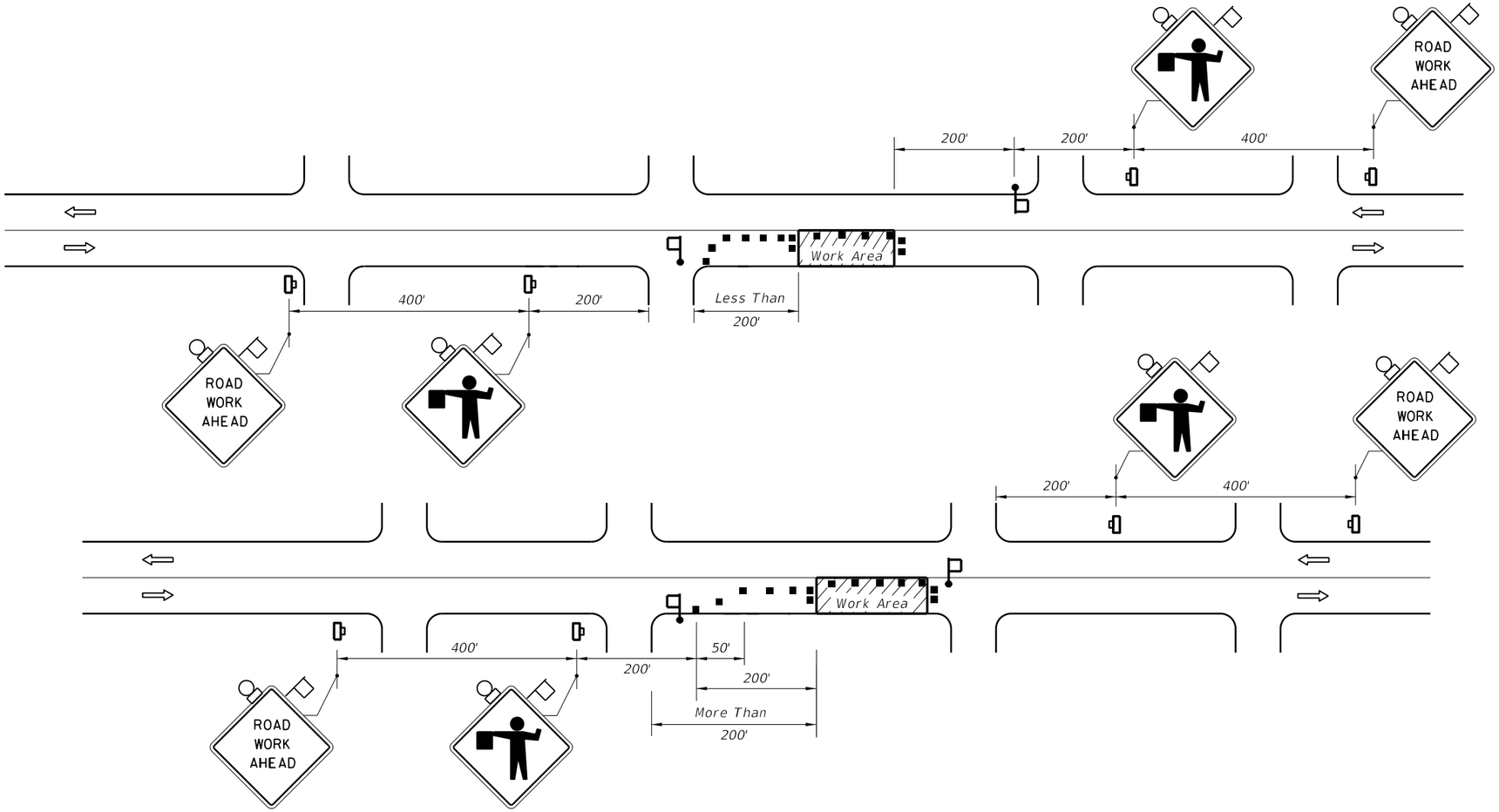

CONDITIONS

WHERE ANY VEHICLE, EQUIPMENT, WORKERS OR THEIR ACTIVITIES ENCROACH ON THE PAVEMENT REQUIRING THE CLOSURE OF ONE TRAFFIC LANE, FOR WORK AREAS LESS THAN 200' DOWNSTREAM FROM AN INTERSECTION FOR A PERIOD OF MORE THAN 60 MINUTES.

CONDITIONS

WHERE ANY VEHICLE, EQUIPMENT, WORKERS OR THEIR ACTIVITIES ENCROACH ON THE PAVEMENT REQUIRING THE CLOSURE OF ONE TRAFFIC LANE, FOR WORK AREAS 200' OR MORE DOWNSTREAM FROM AN INTERSECTION FOR A PERIOD OF MORE THAN 60 MINUTES.

SYMBOLS

- *Work Area*
- *Sign With 18" x 18" (Min.) Orange Flag And Type B Light*
- *Channelizing Device (See Index No. 600)*
- *Work Zone Sign*
- *Flagger*
- *Lane Identification + Direction of Traffic*

GENERAL NOTES

1. *Work operations shall be confined to one travel lane, leaving the opposing travel lane open to traffic.*
2. *When vehicles in a parking zone block the line of sight to TCZ signs or when TCZ signs encroach on a normal pedestrian walkway, the signs shall be post mounted and located in accordance with Index No. 17302.*
3. *If work area is confined to an outside auxiliary lane, the work area shall be barricaded and the FLAGGER signs replaced by ROAD WORK AHEAD signs. Flaggers are not required.*
4. *Flaggers shall be in sight of each other or in direct communication at all times.*
5. *The FLAGGER legend sign may be substituted for the symbol sign.*
6. *The maximum spacing between devices shall be no greater than 25.'*
7. *For general TCZ requirements and additional information, refer to Index No. 600.*
8. *The two channelizing devices directly in front and directly at the end of the work area may be omitted provided vehicles in the work area have high-intensity rotating, flashing, oscillating, or strobe lights operating.*

DURATION NOTES

1. *ROAD WORK AHEAD sign may be omitted if all of the following conditions are met:*
   a. *Work operations are 60 minutes or less.*
   b. *Speed is 45 mph or less.*
   c. *No sight obstructions to vehicles approaching the work area for a distance of 600 feet.*
   d. *Vehicles in the work area have high-intensity, rotating, flashing, oscillating, or strobe lights operating.*
   e. *Volume and complexity of the roadway has been considered.*

C:\d\projects\standards\roadway\00600-s\00605-01.dgn
rd960rh
2:07:58 PM
6/28/2012

LAST REVISION	REVISION	DESCRIPTION:		FDOT DESIGN STANDARDS 2013	TWO-LANE, TWO-WAY, WORK NEAR INTERSECTION	INDEX NO.	SHEET NO.
07/01/09			STATE OF FLORIDA DEPARTMENT OF TRANSPORTATION			605	1

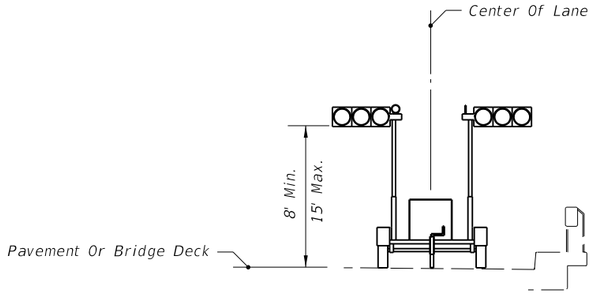

PORTABLE SIGNALS

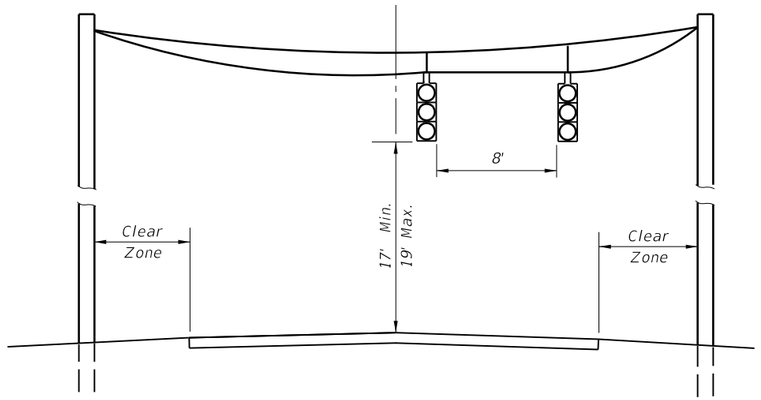

SPAN WIRE SIGNALS

SIGNAL MOUNT DETAILS

SYMBOLS

- Work Area
- Sign With 18" x 18" (Min.) Orange Flag And Type B Light
- Work Zone Sign
- Traffic Signal
- Channelizing Device (See Index No. 600)
- Type III Barricade
- Stop Bar
- Flagger
- Portable Signal
- Lane Identification + Direction of Traffic

GENERAL NOTES

1. Work operations shall be confined to one traffic lane, except for haul road crossings, leaving the opposite lane open to traffic.
2. The installation and timing of signals shall be approved by the District Traffic Operations Engineer prior to signals being placed in operation.

   Where sight distance to the signal is limited, the signals may be mounted on span wire at the discretion of the Engineer.

   The maximum distance between portable traffic signals (receiver/controllers) shall be 0.25 mile; however, in no case shall the distance exceed the maximum distance at which the remote operator (transmitter) can positively and safely operate both portable signals.
3. Flaggers to supplement the signal operator/flagger shall be used when needed to assure safe movements between traffic and operating equipment, as determined by the Engineer.
4. When needed, an additional warning sign may be installed in advance of the ROAD WORK AHEAD sign. The distance between successive signs shall be 500'.
5. The SIGNAL AHEAD legend sign may be substituted for the symbol sign.
6. SIGNAL AHEAD and EQUIPMENT CROSSING AHEAD signs are to be removed or fully covered when no work is being performed and the highway is open to two-way traffic. Type III Barricades shall be in place to block haul road access when the haul road is not in operation and a flagger/signal operator is not on duty, except when the haul road is an existing properly marked road.
7. When a side road intersects the highway within the TTC zone, additional TTC devices shall be placed in accordance with other applicable TCZ Indexes.
8. For general TCZ requirements and additional information, refer to Index No. 600.
9. Span wire signals are to be used only in work zones with workers present, where the contractor can monitor signal operation and maintain traffic with flaggers in the event of a power failure.

CONDITIONS

WHERE ANY VEHICLE, EQUIPMENT, WORKERS OR THEIR ACTIVITIES WILL ENCROACH ON ONE LANE OR MOMENTARILY ENCROACH ON BOTH LANES OF A TWO-LANE TWO-WAY ROADWAY AND TRAFFIC SIGNALS ARE NEEDED.

C:\d\projects\standards\roadway\00600-s\00606-01.dgn
rd960rh
2:08:00 PM
6/28/2012

LAST REVISION	REVISION	DESCRIPTION:				
07/01/09			FDOT DESIGN STANDARDS 2013	TWO-LANE, TWO-WAY, WORK WITHIN THE TRAVEL WAY - SIGNAL CONTROL	INDEX NO. 606	SHEET NO. 1

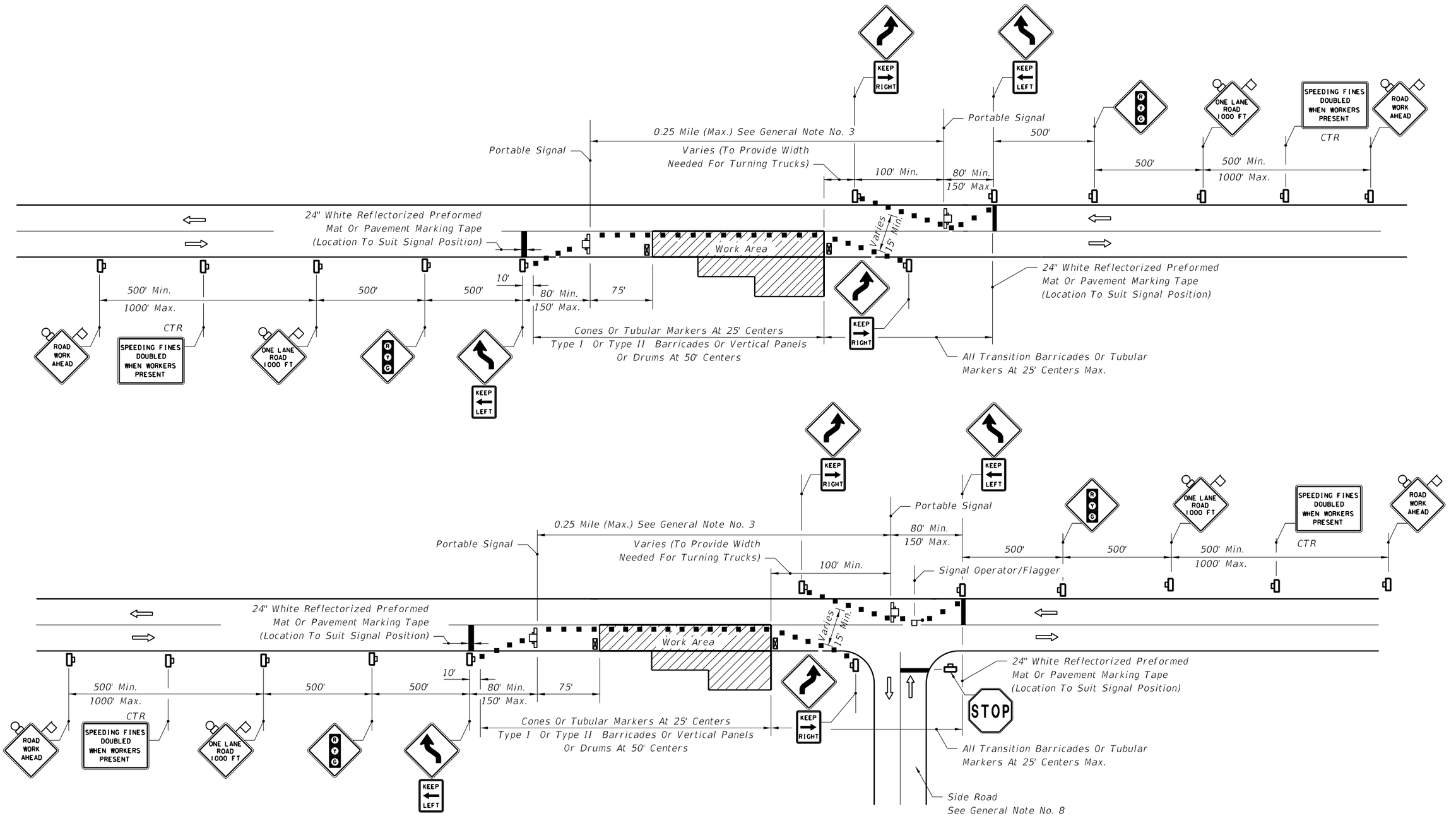

SINGLE LANE CLOSURE • ROADWAY AND BRIDGES ALL LENGTHS

6/28/2012 2:08:02 PM rd960rh C:\d\projects\standards\roadway\00600-s\00606-02.dgn

LAST REVISION	REVISION	DESCRIPTION:		FDOT DESIGN STANDARDS 2013	TWO-LANE, TWO-WAY, WORK WITHIN THE TRAVEL WAY - SIGNAL CONTROL	INDEX NO.	SHEET NO.
07/01/09			STATE OF FLORIDA DEPARTMENT OF TRANSPORTATION			606	2

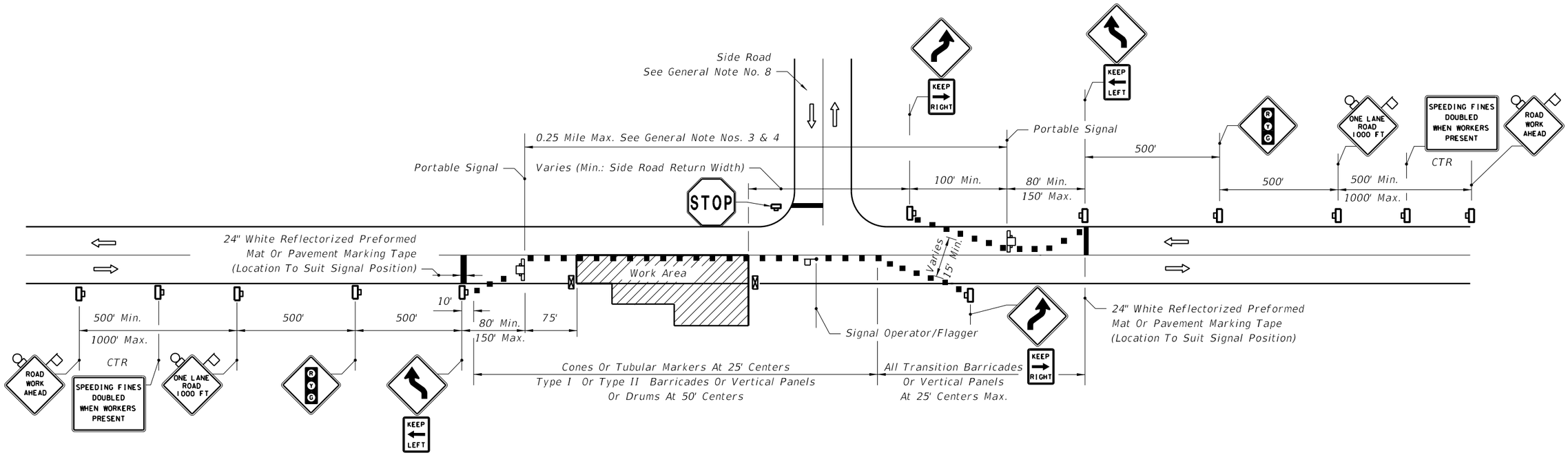

SINGLE LANE CLOSURE • ROADWAY AND BRIDGES ALL LENGTHS

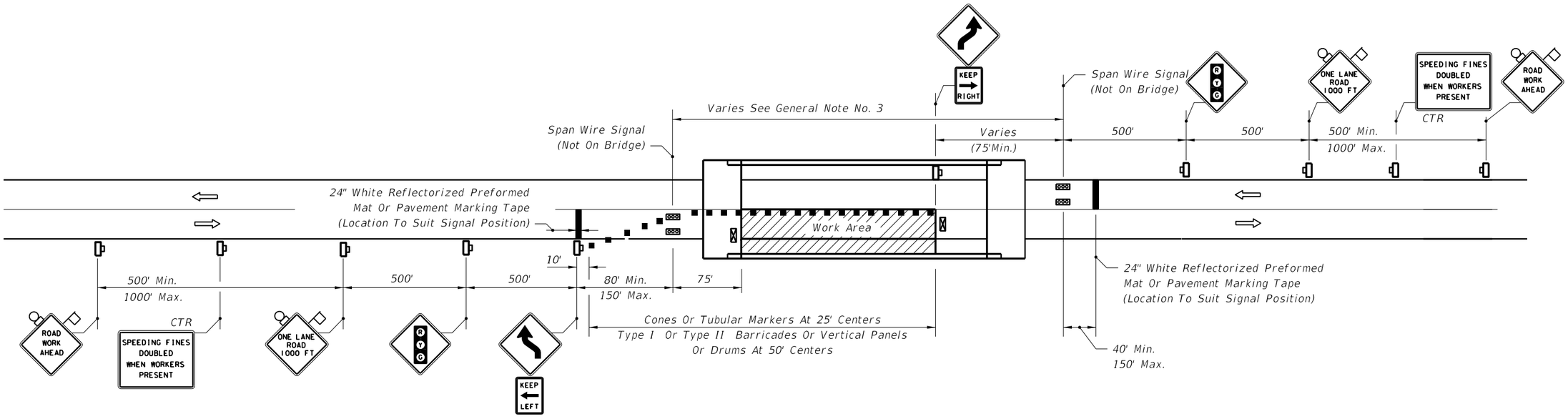

SINGLE LANE CLOSURE • SHORT BRIDGES

C:\d\projects\standards\roadway\00600-s\00606-03.dgn
rd960rh
2:08:04 PM
6/28/2012

LAST REVISION	REVISION	DESCRIPTION:				
07/01/09			FDOT DESIGN STANDARDS 2013	TWO-LANE, TWO-WAY, WORK WITHIN THE TRAVEL WAY - SIGNAL CONTROL	INDEX NO. 606	SHEET NO. 3

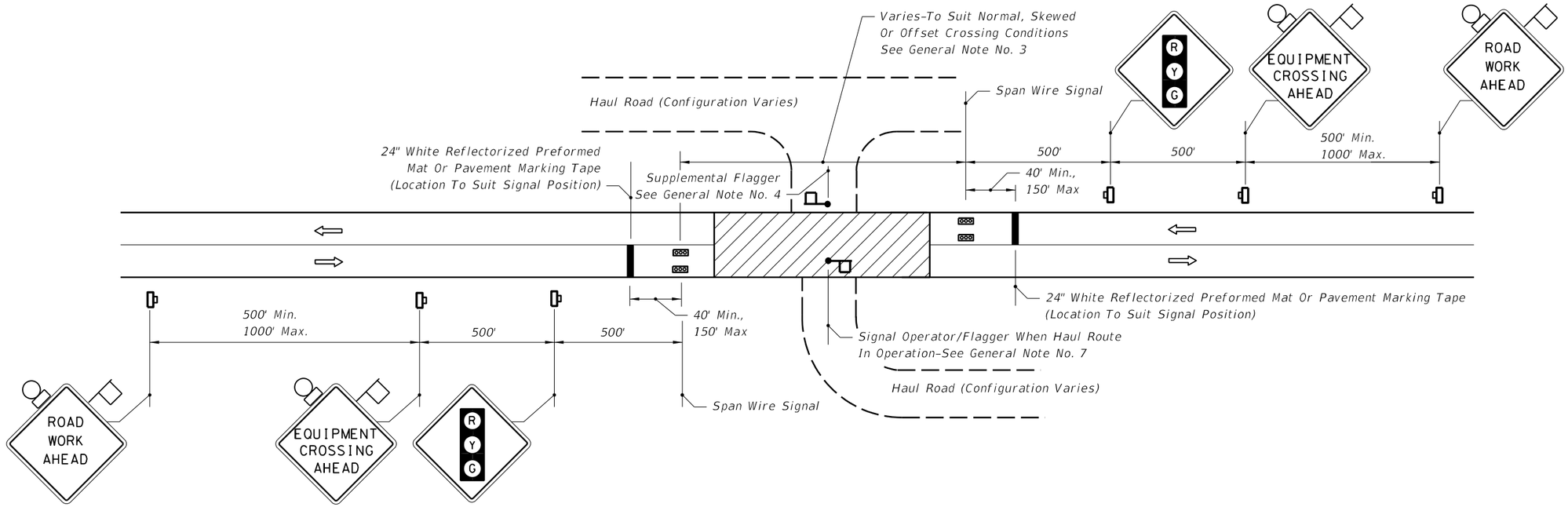

MOMENTARY ROADWAY CLOSURE • HAUL ROUTE CROSSING

C:\d\projects\standards\roadway\00600-s\00606-04.dgn
rd960rh
2:08:06 PM
6/28/2012

LAST REVISION	REVISION	DESCRIPTION:			INDEX NO.	SHEET NO.
07/01/05			FDOT DESIGN STANDARDS 2013	TWO-LANE, TWO-WAY, WORK WITHIN THE TRAVEL WAY - SIGNAL CONTROL	606	4

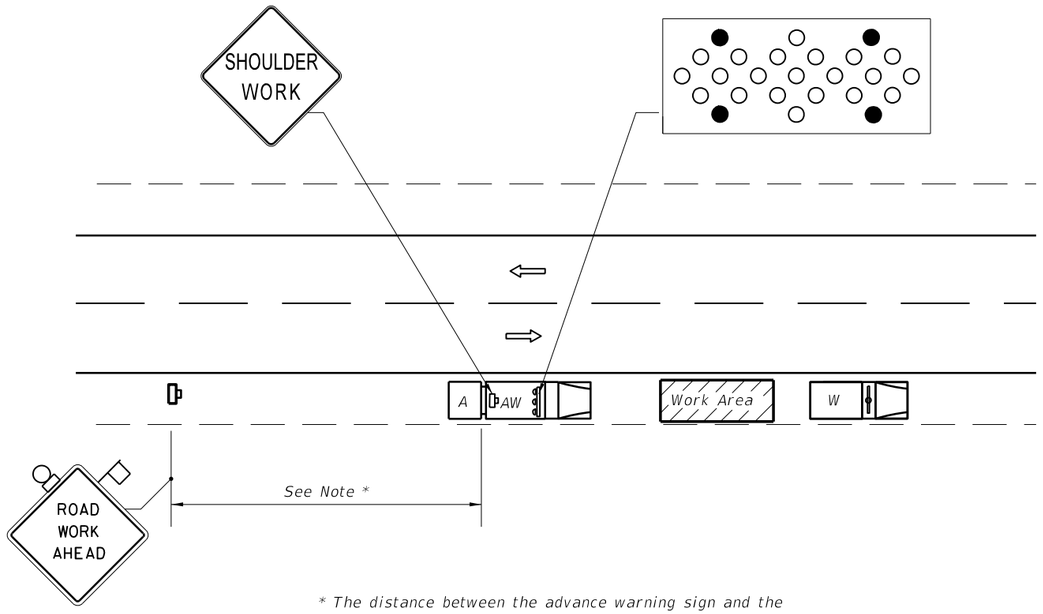

* The distance between the advance warning sign and the work location should not exceed 5 miles.

WORK ON SHOULDER

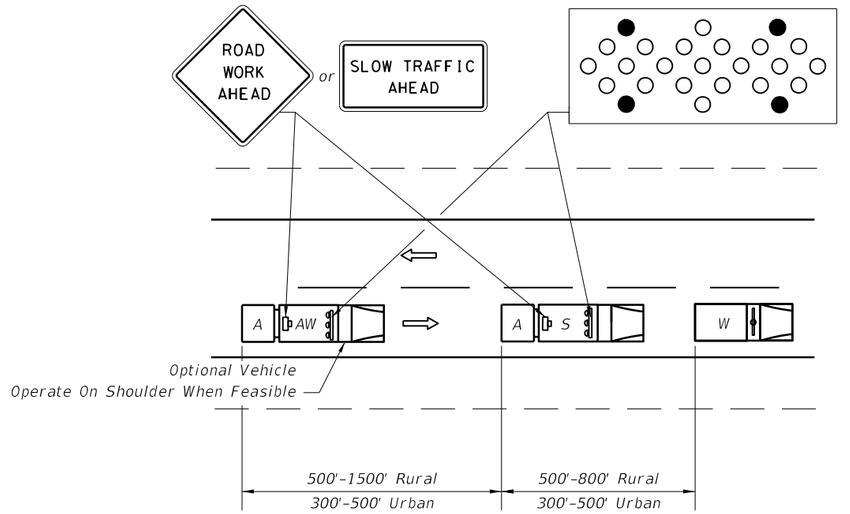

ADVANCE WARNING ARROW BOARD MODE • CAUTION

The Advance Warning Vehicle (Optional) may be used at the direction of the Engineer. If an Advance Warning Vehicle is operated within the travel way, an approved Truck Mounted Attenuator will be required on the Advance Warning Vehicle but not required on the Shadow Vehicle. The Advance Warning Arrow Board and Warning Sign are required on both the Advance Warning and Shadow Vehicles.

WORK IN TRAVEL WAY

SYMBOLS

- Work Area
- Sign With 18" x 18" (Min.) Orange Flag And Type B Light
- Work Zone Sign
- Lane Identification + Direction of Traffic
- W — Work Vehicle With Rotating/Strobe Lights
- X — Shadow (S) Or Advance Warning (AW) Vehicle with Advance Warning Arrow Board and Sign Message
- A — Truck/Trailer Mounted Attenuator (TMA)
- Advanced Warning Arrow Board

GENERAL NOTES

1. Where work activities within 2' of the edge of travel way are incidental (i.e., Mowing, Litter Removal), the Engineer may delete requirements for signs and the advance warning vehicle provided vehicles in the work area have high-intensity rotating, flashing, oscillating, or strobe lights operating.
2. If an arrow board is used, the caution mode shall be used.
3. Shadow and Advance Warning Vehicle shall display rotating/strobe lights.
4. For general TCZ requirements and additional information, refer to Index No. 600.

CONDITIONS

WHERE ANY VEHICLE, EQUIPMENT, WORKERS OR THEIR ACTIVITIES REQUIRE AN INTERMITTENT OR CONTINUOUS MOVING OPERATION.

C:\d\projects\standards\roadway\00600-s\00607-01.dgn
rd960rh
2:08:08 PM
6/28/2012

LAST REVISION	REVISION	DESCRIPTION:		FDOT DESIGN STANDARDS 2013	TWO-LANE, TWO-WAY, MOBILE OPERATION, WORK ON SHOULDER AND WORK WITHIN THE TRAVEL WAY	INDEX NO.	SHEET NO.
07/01/09						607	1

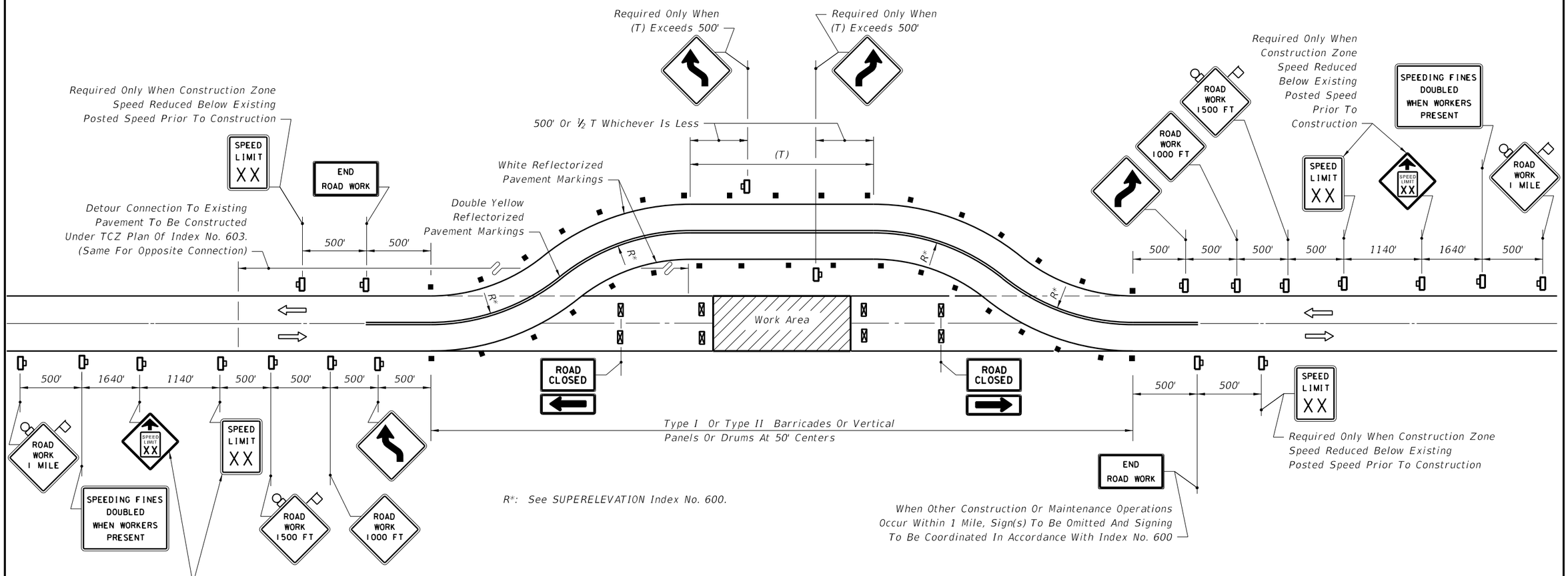

R*: See SUPERELEVATION Index No. 600.

SYMBOLS

- Work Area
- Sign With 18" x 18" (Min.) Orange Flag And Type B Light
- Channelizing Device (See Index No. 600)
- Type III Barricade
- Work Zone Sign
- Lane Identification + Direction of Traffic

GENERAL NOTES

1. For speed sign applications, see Index No. 600.
2. Where the tangent distance (T) exceeds 600', spacing between cones or tubular markers may be increased to 50' or spacing between Type I or Type II barricades, vertical panels or drums may be increased to 100' within limits of the tangent, or post mounted delineators at 50' centers may be substituted for the barricades, vertical panels or drums.
3. On the existing pavement, all existing markings within the realignment which conflict with the revised traffic pattern are to be removed and removable pavement markings used for marking a new centerline and edge lines.
4. Where the tangent distance (T) exceeds 600' and no passing or stopping sight distance restrictions exist, the yellow reflectorized markings used to indicate the centerline of the traveled way may be replaced with yellow reflectorized markings in a broken pattern. For raised pavement marker application see Index No. 600 and Index No. 17352.
5. When a side road intersects the highway within the TTC zone, additional TTC devices shall be placed in accordance with other applicable TCZ Indexes.
6. If temporary structures are required on the diversion, traffic control will be in conformance with Index No. 650.
7. For general TCZ requirements and additional information, refer to Index Nos. 600 and 17352.
8. If posted speed for Work Zone is 45 mph or less, use "ROAD WORK ½ MILE" and space accordingly.

CONDITIONS

WHERE ANY VEHICLE, EQUIPMENT, WORKERS OR THEIR ACTIVITIES REQUIRE THE CLOSURE OF BOTH LANES AND A TEMPORARY DIVERSION IS CONSTRUCTED.

C:\d\projects\standards\roadway\00600-s\00608-01.dgn
rd960rh
2:08:10 PM
6/28/2012

LAST REVISION	REVISION	DESCRIPTION:				
07/01/09			FDOT DESIGN STANDARDS 2013	TWO-LANE, TWO-WAY TEMPORARY DIVERSION CONNECTION	INDEX NO. 608	SHEET NO. 1

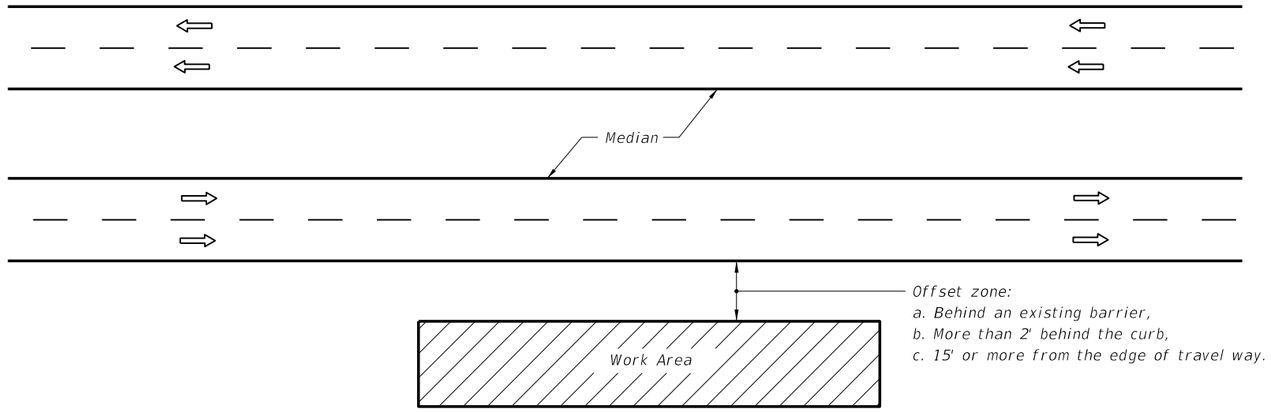

GENERAL NOTES

1. If the work operation (excluding establishing and terminating the work area), requires that two or more work vehicles cross the offset zone in any one hour, traffic control will be in accordance with Index No. 612.
2. No special signing is required.
3. This index also applies when work is being performed on a multilane undivided highway.
4. This index also applies to work performed in the median behind an existing barrier or more than 15' from the edge of travel way, both roadways. Work performed in the median behind curb and gutter shall be in accordance with Index No. 612.
5. When a side road intersects the highway within the work area, additional traffic control devices shall be placed in accordance with other applicable TCZ Indexes.
6. When construction activities encroach on a sidewalk, refer to Index No. 660.
7. For general TCZ requirements and additional information, refer to Index No. 600.

SYMBOLS

Work Area

Lane Identification + Direction of Traffic

CONDITIONS

WHERE ANY VEHICLE, EQUIPMENT, WORKERS AND THEIR ACTIVITIES ARE BEHIND AN EXISTING BARRIER, MORE THAN 2' BEHIND THE CURB, OR 15' OR MORE FROM THE EDGE OF TRAVEL WAY.

C:\d\projects\standards\roadway\00600-s\00611-01.dgn
rd960rh
2:08:12 PM
6/28/2012

LAST REVISION	REVISION	DESCRIPTION:		FDOT DESIGN STANDARDS 2013	MULTILANE WORK OUTSIDE SHOULDER	INDEX NO.	SHEET NO.
07/01/05						611	1

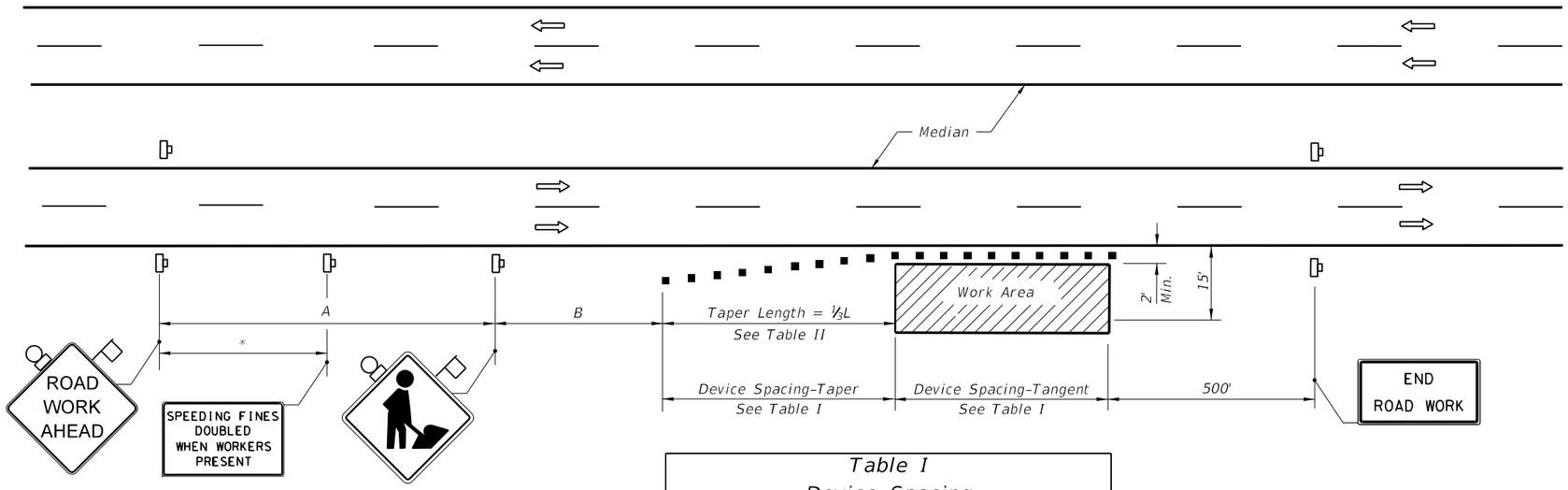

DISTANCE BETWEEN SIGNS		
Speed	Spacing (ft.)	
	A	B
40 mph or less	200	200
45 mph	350	350
50 mph or greater	500	500

*500' beyond the ROAD WORK AHEAD sign or midway between signs whichever is less.

Table I Device Spacing				
Speed (mph)	Max. Distance Between Devices (ft.)			
	Cones or Tubular Markers		Type I or Type II Barricades or Vertical Panels or Drums	
	Taper	Tangent	Taper	Tangent
25	25	50	25	50
30 to 45	25	50	30	50
50 to 70	25	50	50	100

Table II Taper Length - Shoulder				
Speed (mph)	⅓L (ft.)			Notes
	8' Shldr.	10' Shldr.	12' Shldr.	
25	28	35	42	$L=\frac{WS^2}{60}$
30	40	50	60	
35	55	68	82	
40	72	90	107	
45	120	150	180	L=WS
50	133	167	200	
55	147	183	220	
60	160	200	240	
65	173	217	260	
70	187	233	280	

8' minimum shoulder width.

⅓L = Length of shoulder taper in feet

W = Width of total shoulder in feet (combined paved and unpaved width)

S = Posted speed limit (mph)

SYMBOLS

- Work Area
- Sign With 18" X 18" (Min.) Orange Flag And Type B Light
- Channelizing Device (See Index No. 600)
- Work Zone Sign
- Lane Identification + Direction of Traffic

GENERAL NOTES

1. If the work operation encroaches on the through traffic lanes or when four or more work vehicles enter the through traffic lanes in a one hour period (excluding establishing and terminating the work area), a flagger shall be provided and a FLAGGER sign shall be substituted for the WORKERS sign. The flagger shall be positioned at the point of vehicle entry or departure from the work area.
2. This TCZ plan also applies to work performed in the median more than 2' but less than 15' from the edge of travelway.
3. When work is being performed on a multilane undivided roadway the signs normally mounted in the median (as shown) shall be omitted.
4. WORKERS signs to be removed or fully covered when no work is being performed.
5. SHOULDER WORK sign may be used as an alternate to the WORKER symbol sign.
6. When a side road intersects the highway within the TTC zone, additional TTC devices shall be placed in accordance with other applicable TCZ Indexes.
7. For general TCZ requirements and additional information, refer to Index No. 600.

DURATION NOTES

1. Signs and channelizing devices may be omitted if all of the following conditions are met:
   a. Work operations are 60 minutes or less.
   b. Vehicles in the work area have high-intensity, rotating, flashing, oscillating, or strobe lights operating.

CONDITIONS

WHERE ANY VEHICLE, EQUIPMENT, WORKERS OR THEIR ACTIVITIES ENCROACH THE AREA CLOSER THAN 15' BUT NOT CLOSER THAN 2' TO THE EDGE OF TRAVEL WAY.

C:\d\projects\standards\roadway\00600-s\00612-01.dgn
rd960rh
2:08:14 PM
6/28/2012

LAST REVISION	REVISION	DESCRIPTION:				
07/01/07			FDOT DESIGN STANDARDS 2013	MULTILANE, WORK ON SHOULDER	INDEX NO. 612	SHEET NO. 1

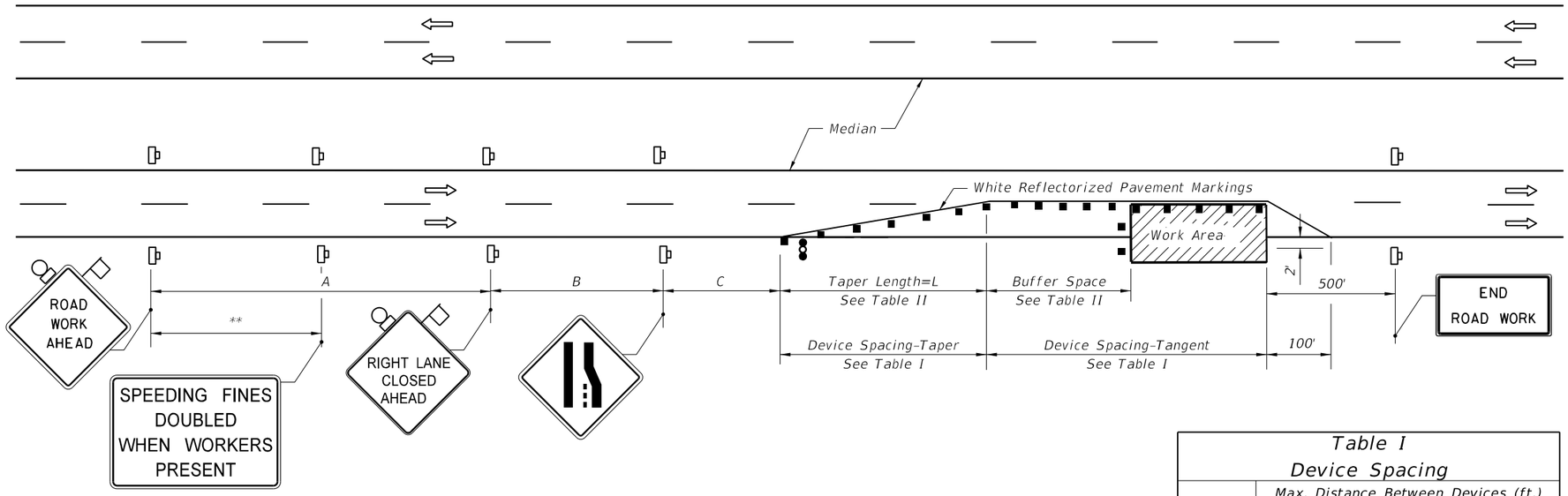

Table II
Buffer Space and Taper Length

Speed (mph)	Buffer Space	Taper Length (12' Lateral Transition)	
	Dist. (ft.)	L (ft.)	Notes (Merge)
25	155	125	$L = \frac{WS^2}{60}$
30	200	180	
35	250	245	
40	305	320	
45	360	540	L = WS
50	425	600	
55	495	660	
60	570	720	
65	645	780	
70	730	840	

When Buffer Space cannot be attained due to geometric constraints, the greatest attainable length shall be used, but not less than 200 ft.

For lateral transitions other than 12', use
Where:

L = Length of taper in feet
W = Width of lateral transition in feet
S = Posted speed limit (mph)

Table I
Device Spacing

Speed (mph)	Max. Distance Between Devices (ft.)			
	Cones or Tubular Markers		Type I or Type II Barricades or Vertical Panels or Drums	
	Taper	Tangent	Taper	Tangent
25	25	50	25	50
30 to 45	25	50	30	50
50 to 70	25	50	50	100

DISTANCE BETWEEN SIGNS

Speed	Spacing (ft.)		
	A	B	C
40 mph or less	200	200	200
45 mph	350	350	350
50 mph	500	500	500
*55 mph or greater	2640	1640	1000

* The ROAD WORK 1 MILE sign may be used as an alternate to the ROAD WORK AHEAD sign and the RIGHT LANE CLOSED ½ MILE sign may be used as an alternate to the RIGHT LANE CLOSED AHEAD sign.

** 500' beyond the ROAD WORK AHEAD sign or midway between signs whichever is less.

SYMBOLS

- Work Area
- Sign With 18"x 18" (Min.) Orange Flag And Type B Light
- Channelizing Device (See Index No. 600)
- Work Zone Sign
- Advance Warning Arrow Board

GENERAL NOTES

1. Work operations shall be confined to one traffic lane, leaving the adjacent lane open to traffic.
2. On undivided highways the median signs as shown are to be omitted.
3. When work is performed in the median lane on divided highways, the channelizing device plan is inverted and left lane closed and lane ends signs substituted for the right lane closed and lane end signs.

   The same applies to undivided highways with the following exceptions:
   a. Work shall be confined within one median lane.
   b. Additional barricades, cones, or drums shall be placed along the centerline abutting the work area and across the trailing end of the work area.

   When work on undivided highways occurs across the centerline so as to encroach on both median lanes, the inverted plan is applied to the approach of both roadways.
4. Signs and traffic control devices are to be modified in accordance with INTERMITTENT WORK STOPPAGE details (sheet 2 of 2) when no work is being performed and the highway is open to traffic.
5. The two channelizing devices directly in front of the work area may be omitted provided vehicles in the work area have high-intensity rotating, flashing, oscillating, or strobe lights operating.
6. When paved shoulders having a width of 8 ft. or more are closed, channelizing devices shall be used to close the shoulder in advance of the merging taper to direct vehicular traffic to remain within the travel way. See Index No. 612 for shoulder taper formulas.
7. When a side road intersects the highway within the TTC zone, additional TTC devices shall be placed in accordance with other applicable TCZ Indexes.
8. This TCZ plan does not apply when work is being performed in the middle lane(s) of a six or more lane highway. See Index No. 614.
9. For general TCZ requirements and additional information, refer to Index No. 600.

DURATION NOTES

1. Temporary white edgeline may be omitted for work operations less than 3 consecutive calandar days.
2. For work operations up to approximately 15 minutes, signs, channelizing devices, arrow board, and buffer space may be omitted if all of the following conditions are met:
   a. Speed limit is 45 mph or less.
   b. No sight obstructions to vehicles approaching the work area for a distance equal to the buffer space and the taper length combined.
   c. Volume and complexity of the roadway has been considered.
   d. The closed lane is occupied by a class 5 or larger, medium duty truck(s) with a minimum gross weight vehicle rating (GWVR) of 16,001 lb with high-intensity, rotating, flashing, oscillating, or strobe lights mounted above the cab height and operating.
3. For work operations up to 60 minutes, arrow board and buffer space may be omitted if conditions a, b, and c in DURATION NOTE 2 are met, and vehicles in the work area have high-intensity, rotating, flashing, oscillating, or strobe lights operating.

CONDITIONS

WHERE ANY VEHICLE, EQUIPMENT, WORKERS OR THEIR ACTIVITIES ENCROACH ON THE LANE ADJACENT TO EITHER SHOULDER AND THE AREA 2' OUTSIDE THE EDGE OF TRAVEL WAY.

C:\d\projects\standards\roadway\00600-s\00613-01.dgn
rd960rh
2:08:16 PM
6/28/2012

LAST REVISION	REVISION	DESCRIPTION:				
07/01/09			FDOT DESIGN STANDARDS 2013	MULTILANE, WORK WITHIN TRAVEL WAY MEDIAN OR OUTSIDE LANE	INDEX NO. 613	SHEET NO. 1

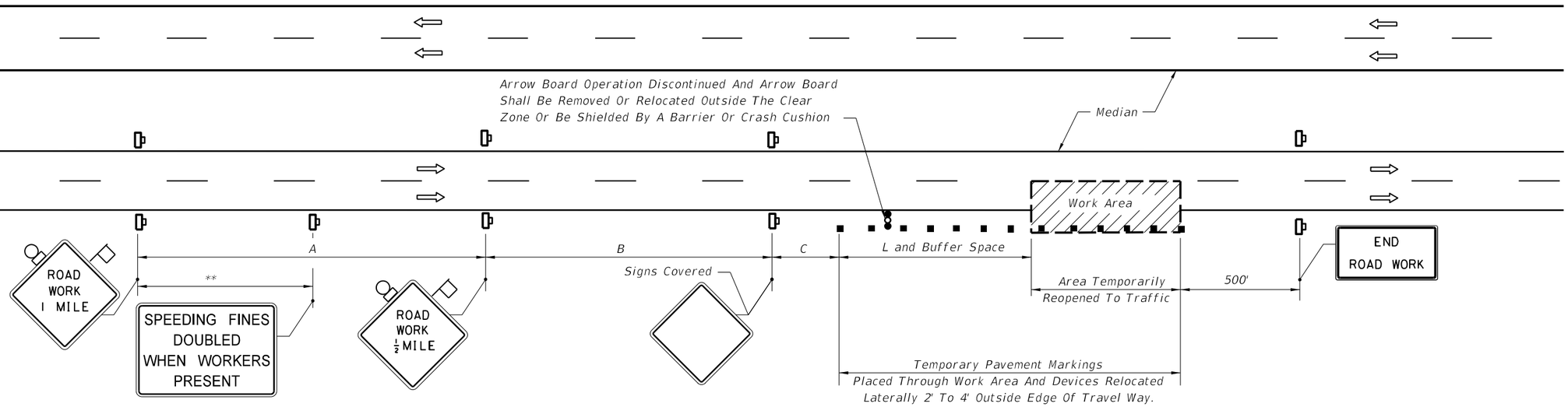

EVEN PAVEMENT

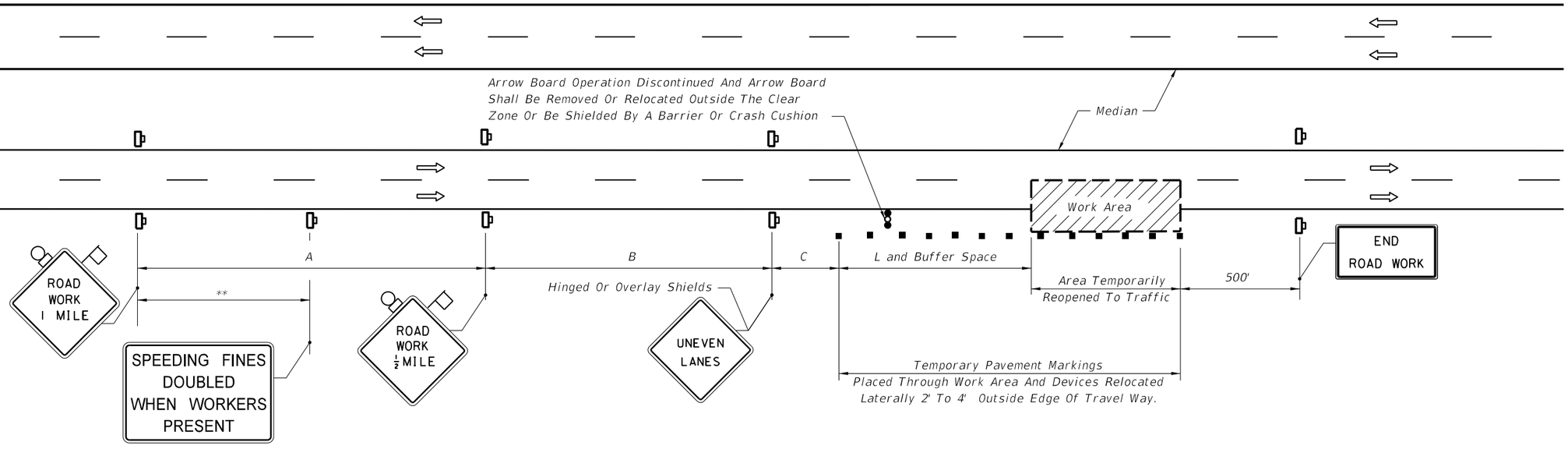

UNEVEN PAVEMENT

INTERMITTENT WORK STOPPAGE - LANE REOPENED TO TRAFFIC

C:\d\projects\standards\roadway\00600-s\00613-02.dgn
rd960rh
2:08:19 PM
6/28/2012

LAST REVISION	REVISION	DESCRIPTION:		FDOT DESIGN STANDARDS 2013	MULTILANE, WORK WITHIN TRAVEL WAY MEDIAN OR OUTSIDE LANE	INDEX NO.	SHEET NO.
07/01/05						613	2

EXISTING POSTED SPEED	PROPOSED WORK ZONE SPEED	REMARKS
MPH	MPH	The 'Proposed Work Zone Speeds' are recommended speeds for the traffic control plan detailed below; however, where the Engineer deems other speeds are appropriate, the applicable speeds are to be shown on the plans.
65	55	
55	45	
45	35	

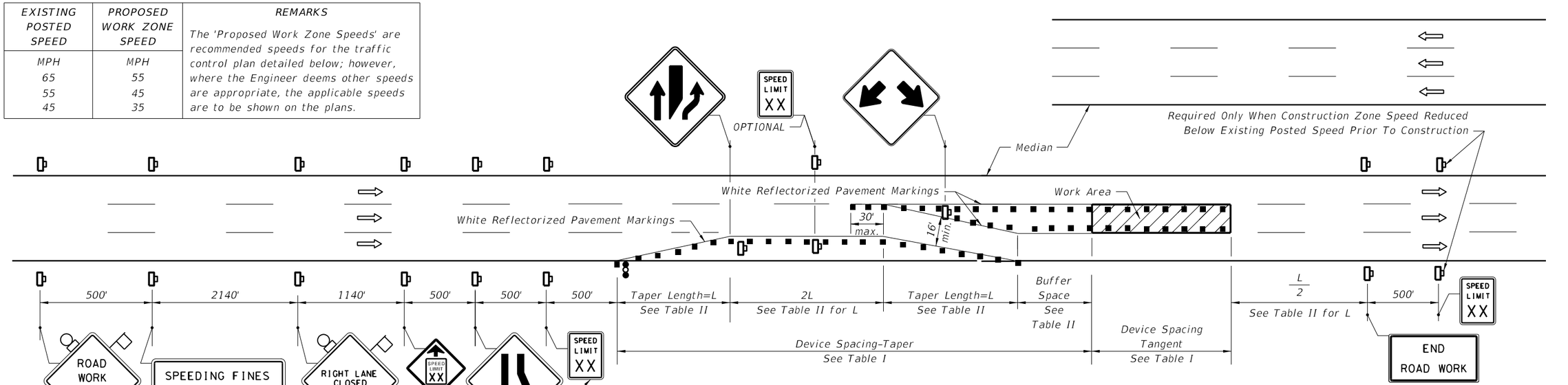

Table I
Device Spacing

Speed (mph)	Max. Distance Between Devices (ft.)			
	Cones or Tubular Markers		Type I or Type II Barricades or Vertical Panels or Drums	
	Taper	Tangent	Taper	Tangent
25	25	50	25	50
30 to 45	25	50	30	50
50 to 70	25	50	50	100

Table II
Buffer Space and Taper Length

Speed (mph)	Buffer Space	Taper Length (12' Lateral Transition)		
	Dist. (ft.)	L (ft.)	Notes (Merge)	
25	155	125	$L = \frac{WS^2}{60}$	
30	200	180		
35	250	245		
40	305	320		
45	360	540	L = WS	
50	425	600		
55	495	660		
60	570	720		
65	645	780		
70	730	840		

When Buffer Space cannot be attained due to geometric constraints, the greatest attainable length shall be used, but not less than 200 ft.

For lateral transitions other than 12', use formula for L shown in the notes column.
Where:
L = Length of taper in feet
W = Width of lateral transition in feet
S = Posted speed limit (mph)

SYMBOLS

- Work Area
- Sign With 18" x 18" (Min.) Orange Flag And Type B Light
- Channelizing Device (See Index No. 600)
- Work Zone Sign
- Advance Warning Arrow Board
- Lane Identification + Direction of Traffic

CONDITION NOTES

1. The RIGHT LANE CLOSED and lane reduction signs are to be removed or fully covered when no work is being performed and the center lane is opened to traffic.
2. For work performed in the median or outside lane, refer to Index No. 613.
3. When the lane closure exceeds a continuous 24 hour period, all existing pavement markings within the realignment which conflict with the revised traffic pattern are to be removed and removable pavement marking used for marking new edge lines and centerline.

GENERAL NOTES

1. When a side road intersects the highway within the TTC zone, additional TTC devices shall be placed in accordance with other applicable TCZ Indexes.
2. For general TCZ requirements and additional information, refer to Index No. 600.

DURATION NOTES

1. Temporary pavement markings may be omitted for work operations less than 3 days.

CONDITIONS

WHERE ANY VEHICLE, EQUIPMENT, WORKERS OR THEIR ACTIVITIES ENCROACH ON ANY PORTION OF A CENTER LANE OF A MULTILANE HIGHWAY, AND TWO DRIVING LANES ARE MAINTAINED ON THE TRAVEL WAY.

C:\d\projects\standards\roadway\00600-s\00614-01.dgn
rd960rh
2:08:21 PM
6/28/2012

LAST REVISION	REVISION	DESCRIPTION:				
07/01/07			FDOT DESIGN STANDARDS 2013	MULTILANE, WORK WITHIN TRAVEL WAY, CENTER LANE	INDEX NO. 614	SHEET NO. 1

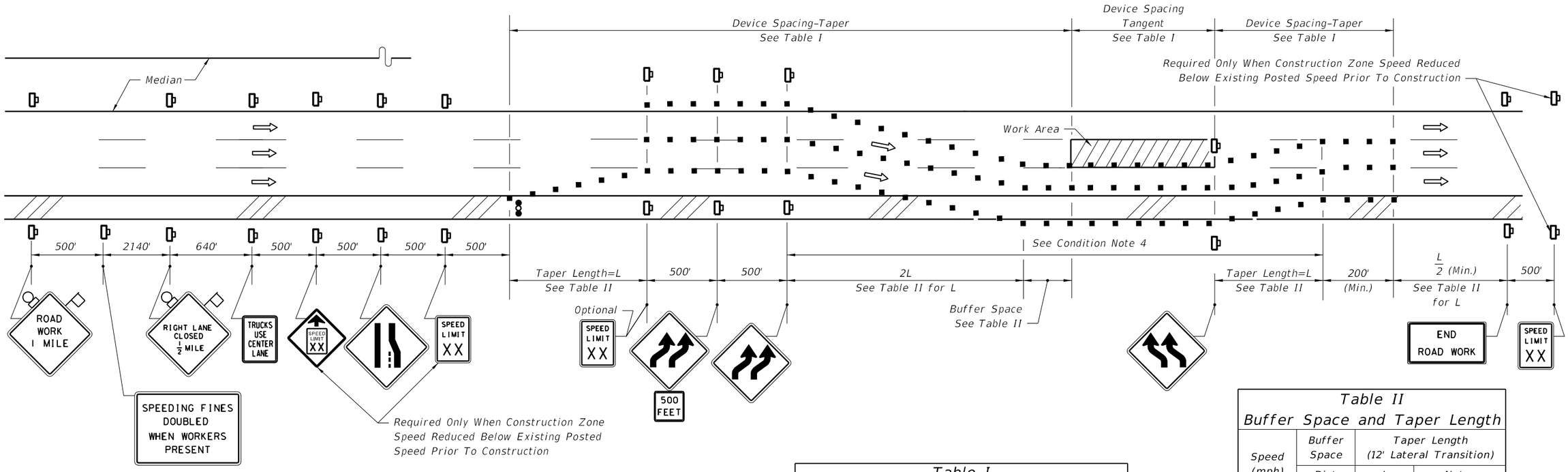

EXISTING POSTED SPEED	PROPOSED WORK ZONE SPEED	REMARKS
MPH	MPH	The 'Proposed Work Zone Speeds' are recommended speeds for the traffic control plan detailed below; however, where the Engineer deems other speeds are appropriate, the applicable speeds.
65	55	
55	45	
45	35	

Table I
Device Spacing

Speed (mph)	Max. Distance Between Devices (ft.)			
	Cones or Tubular Markers		Type I or Type II Barricades or Vertical Panels or Drums	
	Taper	Tangent	Taper	Tangent
25	25	50	25	50
30 to 45	25	50	30	50
50 to 70	25	50	50	100

Table II
Buffer Space and Taper Length

Speed (mph)	Buffer Space	Taper Length (12' Lateral Transition)	
	Dist. (ft)	L (ft)	Notes (Merge)
25	155	125	$L = \frac{WS^2}{60}$
30	200	180	
35	250	245	
40	305	320	
45	360	540	$L = WS$
50	425	600	
55	495	660	
60	570	720	
65	645	780	
70	730	840	

When Buffer Space cannot be attained due to geometric constraints, the greatest attainable length shall be used, but not less than 200 ft.

For lateral transitions other than 12', use formula for L shown in the notes column.
Where:
L = Length of taper in feet
W = Width of lateral transition in feet
S = Posted speed limit (mph)

SYMBOLS

- Work Area
- Sign With 18" x 18" (Min.) Orange Flag And Type B Light
- Channelizing Device (See Index No. 600)
- Work Zone Sign
- Advance Warning Arrow Board

CONDITION NOTES

1. See General Notes, Sheet 1.
2. Length of time that traffic is using shoulder should be minimized. For example, remove lane closure and lane shift at night (unless performing night work) if practical.
3. The RIGHT LANE CLOSED, lane reduction and reverse curve signs are to be removed or fully covered when no work is being performed and the travel way is open to traffic.
4. When the lane closure exceeds a continuous 24 hour period, all existing pavement markings within the realignment which conflict with the revised traffic pattern are to be removed and removable pavement markings used for marking new edge lines and centerlines.
5. For general TCZ requirements and additional information, refer to Index No. 600.

CONDITIONS

WHERE ANY VEHICLE, EQUIPMENT, WORKERS OR THEIR ACTIVITIES ENCROACH ON ANY PORTION OF A CENTER LANE OF A MULTILANE HIGHWAY, AND TWO DRIVING LANES ARE MAINTAINED, AND, THE OUTSIDE SHOULDER PAVEMENT IS TEMPORARILY USED AS A TRAVEL LANE.

C:\d*projects*standards*roadway*00600-s*00614-02.dgn
rd960rh
2:08:23 PM
6/28/2012

LAST REVISION	REVISION	DESCRIPTION:				
07/01/09			FDOT DESIGN STANDARDS 2013	MULTILANE, WORK WITHIN TRAVEL WAY, CENTER LANE	INDEX NO. 614	SHEET NO. 2

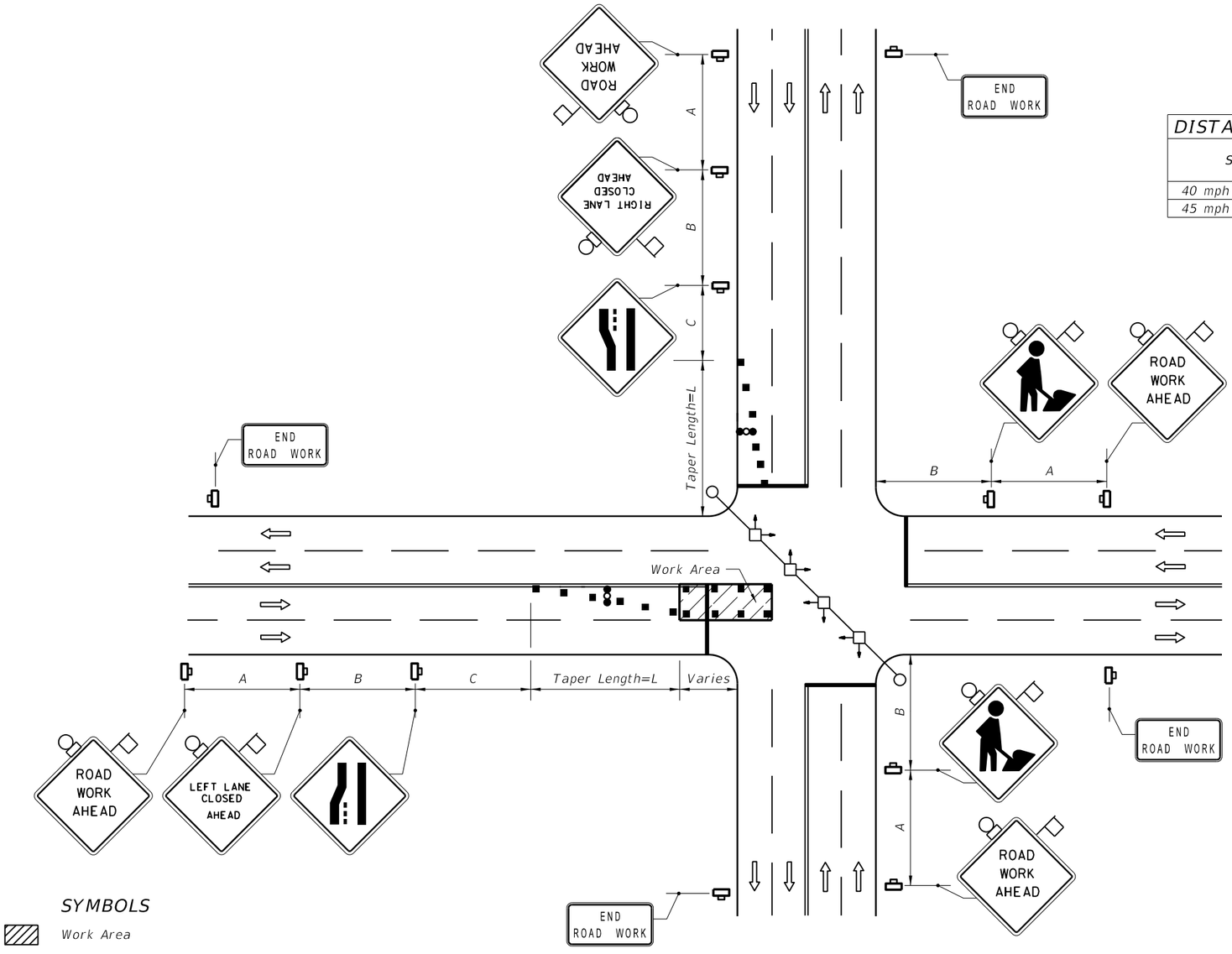

SYMBOLS

- Work Area
- Sign With 18"x 18" (Min.) Orange Flag And Type B Light
- Channelizing Device (See Index No. 600)
- Work Zone Sign
- Stop Bar
- Advance Warning Arrow Board
- Lane Identification + Direction of Traffic

SIGNALIZED

CONDITIONS

WHERE ANY VEHICLE, EQUIPMENT, WORKERS OR THEIR ACTIVITIES ENCROACH ON THE PAVEMENT REQUIRING THE CLOSURE OF AT LEAST ONE MEDIAN TRAFFIC LANE.

DISTANCE BETWEEN SIGNS			
Speed	Spacing (ft.)		
	A	B	C
40 mph or less	200	200	200
45 mph	350	350	350

Table II
Taper Length - Merge (12' Lateral Transition)

Speed (mph)	L (ft.)	Notes (Merge)
25	125	$L = \frac{WS^2}{60}$
30	180	
35	245	
40	320	
45	540	L=WS

For lateral transitions other than 12', use formula for L shown in the notes column. Where:
L = Length of taper in feet
W = Width of lateral transition in feet
S = Posted speed limit (mph)

GENERAL NOTES

1. The WORKERS legend sign may be substituted for the symbol sign.
2. When vehicles in a parking zone block the line of sight to TCZ signs, the signs shall be post mounted and located in accordance with Index No. 17302.
3. If the work space extends across a crosswalk, the crosswalk should be closed using the information in Index No. 660.
4. Dual signs are required for divided roadways.
5. Maximum spacing between barricades, vertical panels, cones, tubular markers and drums shall not be greater than 25'.
6. Temporary signal phasing modifications are to be approved by the District Traffic Operations Engineer prior to the beginning of work.
7. For general TCZ requirements and additional information, refer to Index No. 600.

DURATION NOTES

1. Signs and arrow board may be omitted if all of the following conditions are met:
   a. Work operations are 60 minutes or less.
   b. Speed is 45 mph or less.
   c. No sight obstructions to vehicles approaching the work area for a distance equal to twice the taper length.
   d. Vehicles in the work area have high-intensity, rotating, flashing, oscillating, or strobe lights operating.
   e. Volume and complexity of the roadway has been considered.

C:\d\projects\standards\roadway\00600-s\00615-01.dgn
rd960rh
2:08:25 PM
6/28/2012

LAST REVISION	REVISION	DESCRIPTION:		FDOT DESIGN STANDARDS 2013	MULTILANE WORK IN INTERSECTION	INDEX NO.	SHEET NO.
07/01/12						615	1

GENERAL NOTES

1. Work operations shall be confined to either one lane, or lane combinations as follows:

   a. Outside travel lane;
   b. Outside auxiliary lane;
   c. Outside travel lane and adjoining auxiliary lane;
   d. Inside travel lane △;
   e. Inside auxiliary lane △;
   f. Inside travel lane and adjoining auxiliary lane △
   △ See Sheet 3

   If the work area is confined to an auxiliary lane the work area shall be barricaded and the RIGHT (LEFT) LANE CLOSED AHEAD signs replaced by ROAD WORK AHEAD signs, and the merge symbol signs eliminated.

2. When vehicles in a parking zone block the line of sight to TCZ signs, the signs shall be post mounted and located in accordance with Index No. 17302.

3. If the work space extends across a crosswalk, the crosswalk should be closed using the information in Index No. 660.

4. Signs are required on the median side for divided highways.

5. The two channelizing devices directly in front and directly at the end of the work area may be omitted provided vehicles in the work area have high-intensity rotating, flashing, oscillating, or strobe lights operating.

6. For general TCZ requirements and additional information, refer to Index No. 600.

DURATION NOTES

1. For work operations up to approximately 15 minutes, signs, channelizing devices, and arrow board may be omitted if all of the following conditions are met:

   a. Speed limit is 45 mph or less.
   b. No sight obstructions to vehicles approaching the work area for a distance equal to twice the taper length.
   c. Volume and complexity of the roadway has been considered.
   d. The closed lane is occupied by a class 5 or larger, medium duty truck(s) with a minimum gross weight vehicle rating (GWVR) of 16,001 lb with high-intensity, rotating, flashing, oscillating, or strobe lights mounted above the cab height and operating.

2. For work operations up to 60 minutes, the arrow board may be omitted if conditions a, b, and c in DURATION NOTE 1 are met, and vehicles in the work area have high-intensity, rotating, flashing, oscillating, or strobe lights operating.

SYMBOLS

- Work Area
- Sign With 18" x 18" (Min.) Orange Flag And Type B Light
- Work Zone Sign
- Advance Warning Arrow Board
- Type III Barricade
- Channelizing Device (See Index No. 600)
- Lane Identification + Direction of Traffic

C:\d\projects\standards\roadway\00600-s\00616-01.dgn
rd960rh
2:08:27 PM
6/28/2012

LAST REVISION	REVISION	DESCRIPTION:			INDEX NO.	SHEET NO.
07/01/09			FDOT DESIGN STANDARDS 2013	MULTILANE, WORK NEAR INTERSECTION MEDIAN OR OUTSIDE LANE	616	1

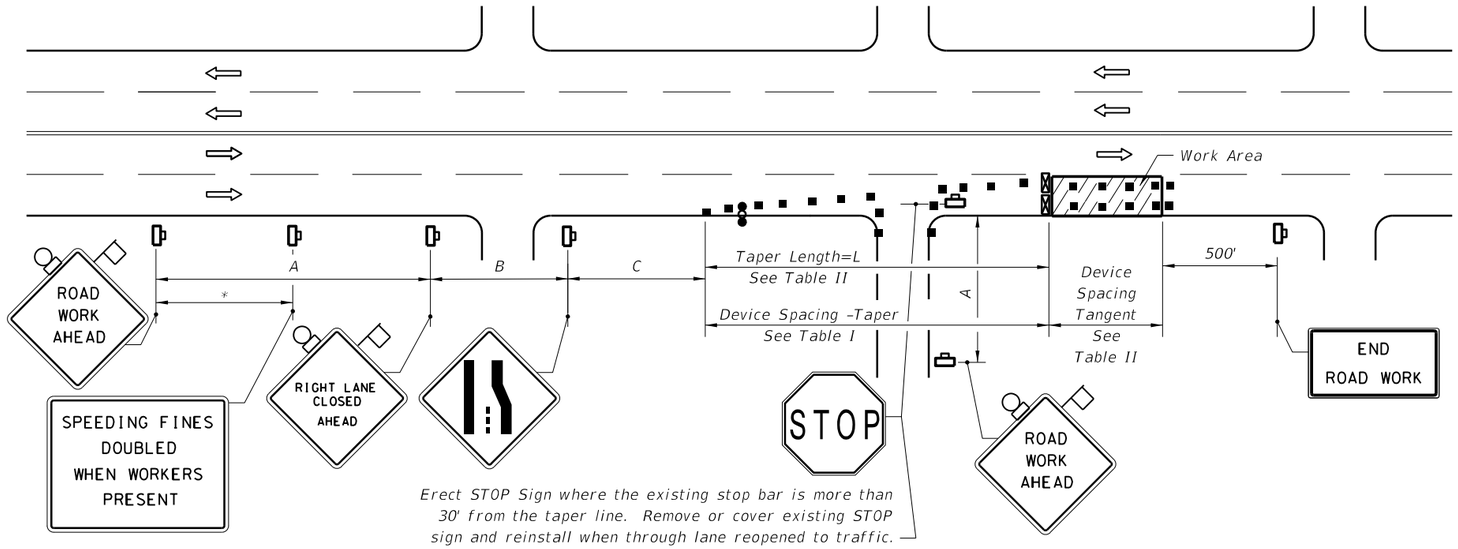

RIGHT LANE CLOSED ON FAR SIDE OF MINOR SIDESTREET

DISTANCE BETWEEN SIGNS			
Speed	Spacing (ft.)		
	A	B	C
40 mph or less	200	200	200
45 mph	350	350	350

* 500' beyond the ROAD WORK AHEAD sign or midway between signs whichever is less.

Table I Device Spacing				
Speed (mph)	Max. Distance Between Devices (ft.)			
	Cones or Tubular Markers		Type I or Type II Barricades or Vertical Panels or Drums	
	Taper	Tangent	Taper	Tangent
25	25	50	25	50
30 to 45	25	50	30	50

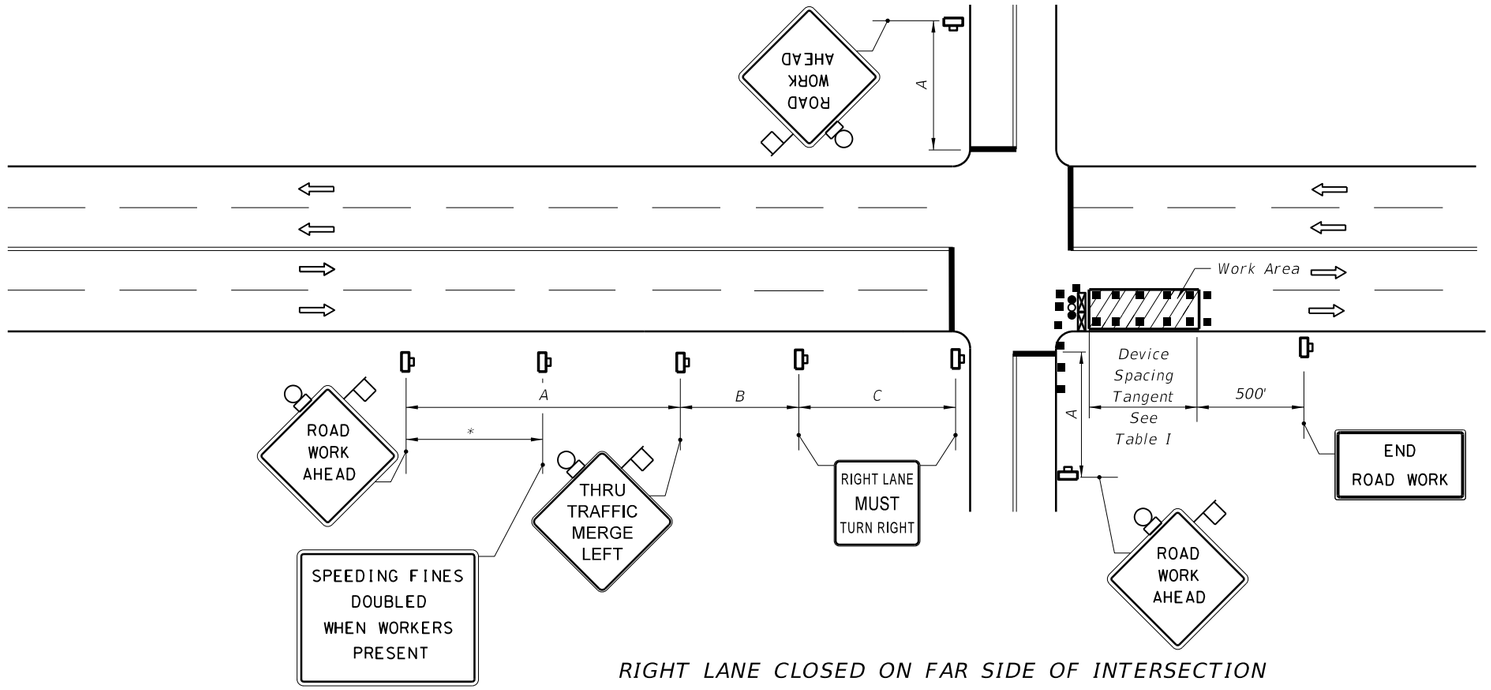

RIGHT LANE CLOSED ON FAR SIDE OF INTERSECTION WITH SIGNIFICANT RIGHT TURNING MOVEMENTS

Table II Taper Length - Merge (12' Lateral Transition)		
Speed (mph)	L (ft)	Notes (Merge)
25	125	$L = \frac{WS^2}{60}$
30	180	
35	245	
40	320	
45	540	L=WS

For lateral transitions other than 12', use formula for L shown in the notes column. Where:
L = Length of taper in feet
W = Width of lateral transition in feet
S = Posted speed limit (mph)

1. *The normal procedure is to close on the near side of the intersection any lane that is not carried through the intersection. However, when this results in the closure of a right lane having significant right turning movements, then the right lane may be restricted to right turns only as shown in this detail.*
2. *For intersection approaches reduced to a single lane, left turning movements may be prohibited to maintain capacity for through vehicular traffic.*

6/28/2012 2:08:29 PM rd960rh C:\d\projects\standards\roadway\00600-s\00616-02.dgn

LAST REVISION	REVISION	DESCRIPTION:		FDOT DESIGN STANDARDS 2013	MULTILANE, WORK NEAR INTERSECTION MEDIAN OR OUTSIDE LANE	INDEX NO.	SHEET NO.
07/01/09						616	2

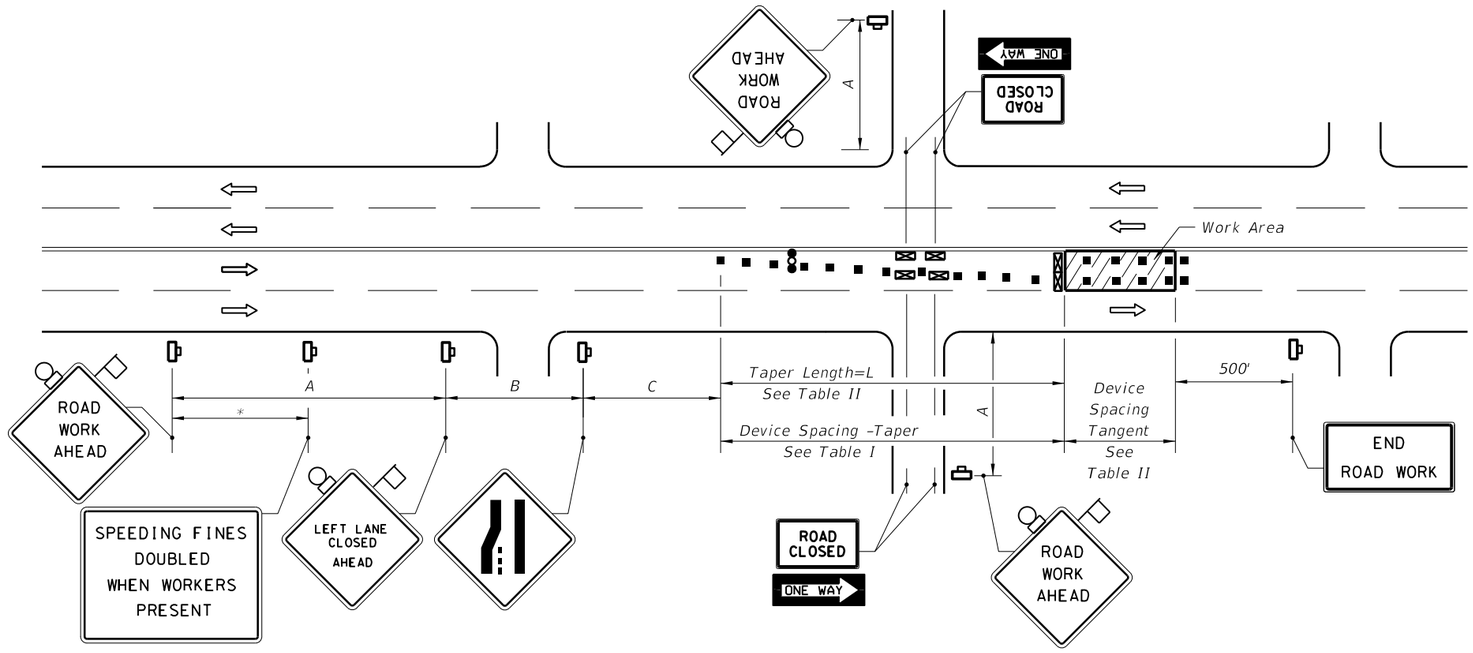

LEFT LANE CLOSED ON FAR SIDE OF MINOR SIDESTREET - RESTRICTED TURNING MOVEMENTS

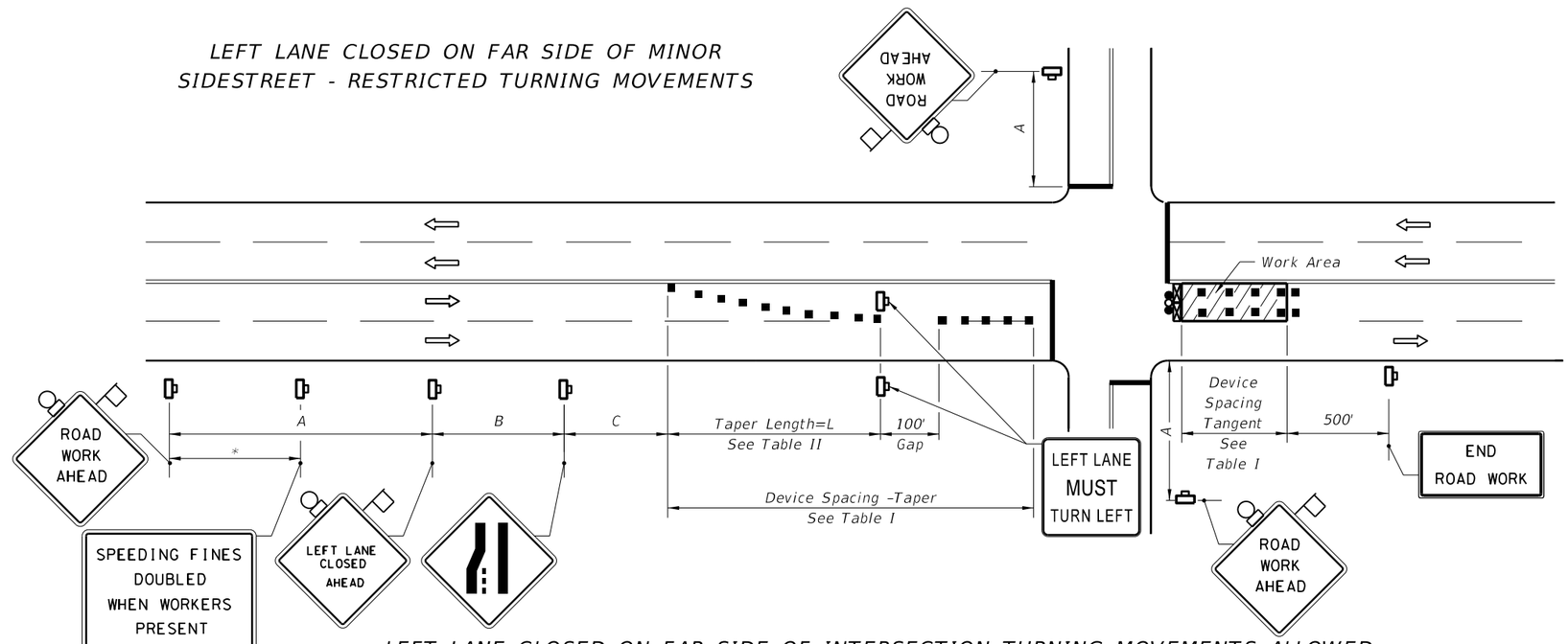

LEFT LANE CLOSED ON FAR SIDE OF INTERSECTION TURNING MOVEMENTS ALLOWED

1. The normal procedure is to close on the near side of the intersection any lane that is not carried through the intersection. However, when this results in the closure of a left lane having significant left turning movements, then the left lane may be reopened as a turn bay for left turns only as show in this detail.

DISTANCE BETWEEN SIGNS			
Speed	Spacing (ft.)		
	A	B	C
40 mph or less	200	200	200
45 mph	350	350	350

* 500' beyond the ROAD WORK AHEAD sign or midway between signs whichever is less.

Table I Device Spacing				
Speed (mph)	Max. Distance Between Devices (ft.)			
	Cones or Tubular Markers		Type I or Type II Barricades or Vertical Panels or Drums	
	Taper	Tangent	Taper	Tangent
25	25	50	25	50
30 to 45	25	50	30	50

Table II Taper Length - Merge (12' Lateral Transition)		
Speed (mph)	L (ft.)	Notes (Merge)
25	125	$L = \frac{WS^2}{60}$
30	180	
35	245	
40	320	
45	540	L = WS

For lateral transitions other than 12', use formula for L shown in the notes column. Where:
L = Length of taper in feet
W = Width of lateral transition in feet
S = Posted speed limit (mph)

C:\d\projects\standards\roadway\00600-s\00616-03.dgn
rd960rh
2:08:31 PM
6/28/2012

LAST REVISION	REVISION	DESCRIPTION:				
07/01/12			FDOT DESIGN STANDARDS 2013	MULTILANE, WORK NEAR INTERSECTION MEDIAN OR OUTSIDE LANE	INDEX NO. 616	SHEET NO. 3

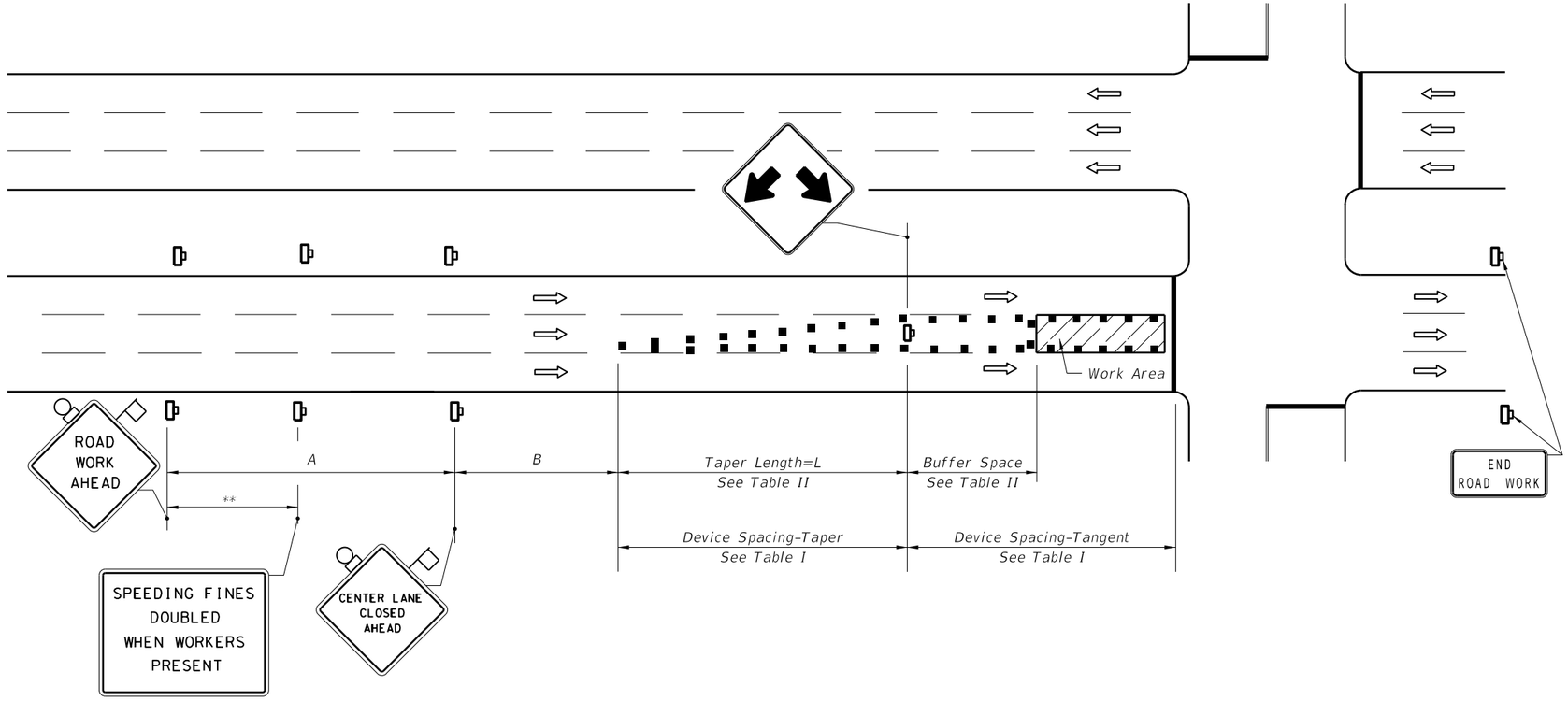

** 500' beyond the ROAD WORK AHEAD sign or midway between signs whichever is less.

DISTANCE BETWEEN SIGNS

Speed	Spacing (ft.)	
	A	B
40 mph or less	200	200
45 mph	350	350

Table I
Device Spacing

Speed (mph)	Max. Distance Between Devices (ft.)			
	Cones or Tubular Markers		Barricades or Vertical Type I or Type II Panels or Drums	
	Taper	Tangent	Taper	Tangent
25	25	50	25	50
30 to 45	25	50	30	50

Table II
Buffer Space and Taper Length

Speed (mph)	Buffer Space	Taper Length (12' Lateral Transition)	
	Dist. (ft.)	L (ft.)	Notes (Merge)
25	155	125	$L = \frac{WS^2}{60}$
30	200	180	
35	250	245	
40	305	320	
45	360	540	L = WS

When Buffer Space cannot be attained due to geometric constraints, the greatest attainable length shall be used, but not less than 200 ft.

For lateral transitions other than 12', use formula for L shown in the notes column.
Where:
L = Length of taper in feet
W = Width of lateral transition in feet
S = Posted speed limit (mph)

SYMBOLS

- Work Area
- Sign With 18" x 18" (Min.) Orange Flag And Type B Light
- Channelizing Device (See Index No. 600)
- Work Zone Sign
- Advance Warning Arrow Board
- Lane Identification + Direction of Traffic

GENERAL NOTES

1. Work operations shall be confined to one center travel lane, leaving the adjacent travel lanes open to traffic.
2. The merging taper shall direct vehicular traffic into either the right or left lane, but not both.
3. When vehicles in a parking zone block the line of sight to TCZ signs, the signs shall be post mounted and located in accordance with Index No. 17302.
4. If the work space extends across a crosswalk, the crosswalk should be closed using the information in Index No. 660.
5. For general TCZ requirements and additional information, refer to Index No. 600.

DURATION NOTES

1. Signs and buffer space may be omitted if all of the following conditions are met:
   a. Work operations are 60 minutes or less.
   b. Speed limit is 45 mph or less.
   c. No sight obstructions to vehicles approaching the work area for a distance equal to the buffer space and the taper length combined.
   d. Vehicles in the work area have high-intensity, rotating, flashing, oscillating, or strobe lights operating.
   e. Volume and complexity of the roadway has been considered.

CONDITIONS

WHERE ANY VEHICLE, EQUIPMENT, WORKERS OR THEIR ACTIVITIES ENCROACH ON THE PAVEMENT REQUIRING THE CLOSURE OF THE CENTER LANE NEAR AN INTERSECTION.

C:\d\projects\standards\roadway\00600-s\00617-01.dgn
rd960rh
2:08:33 PM
6/28/2012

LAST REVISION	REVISION	DESCRIPTION:				
07/01/09			FDOT DESIGN STANDARDS 2013	MULTILANE, WORK IN INTERSECTION CENTER LANE	INDEX NO. 617	SHEET NO. 1

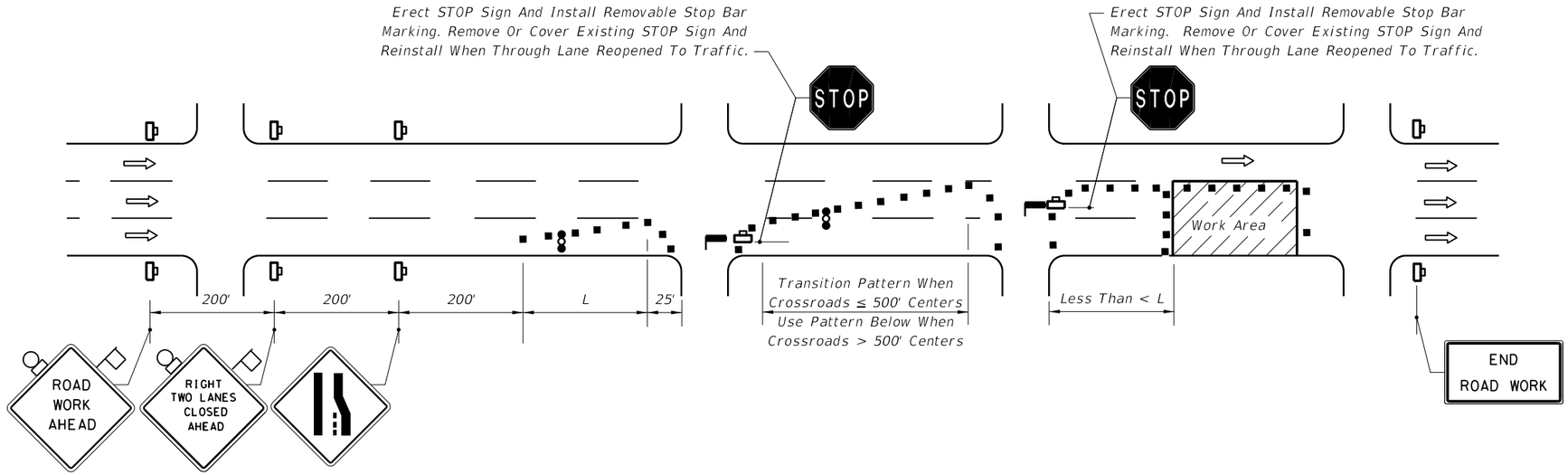

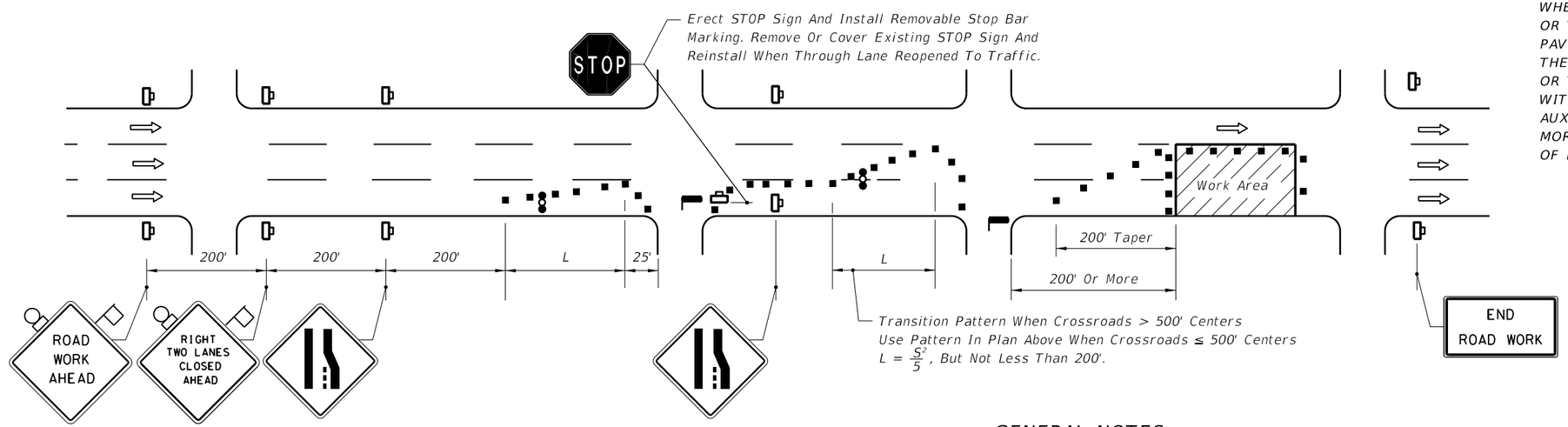

CONDITIONS

WHERE ANY VEHICLE, EQUIPMENT, WORKERS OR THEIR ACTIVITIES ENCROACH ON THE PAVEMENT REQUIRING THE CLOSURE OF EITHER THE OUTSIDE AND CENTER TRAVEL LANES OR THE MEDIAN AND CENTER TRAVEL LANES, WITH OR WITHOUT CLOSURE OF ADJOINING AUXILIARY LANES, FOR WORK AREA LESS THAN 200' FROM INTERSECTION, FOR A PERIOD OF MORE THAN 60 MINUTES.

CONDITIONS

WHERE ANY VEHICLE, EQUIPMENT, WORKERS OR THEIR ACTIVITIES ENCROACH ON THE PAVEMENT REQUIRING THE CLOSURE OF EITHER THE OUTSIDE AND CENTER TRAVEL LANES OR THE MEDIAN AND CENTER TRAVEL LANES, WITH OR WITHOUT CLOSURE OF ADJOINING AUXILIARY LANES, FOR WORK AREA 200' OR MORE FROM INTERSECTION, FOR A PERIOD OF MORE THAN 60 MINUTES.

Table II
Taper Length - Merge (12' Lateral Transition)

Speed (mph)	L (ft.)	Notes (Merge)
25	125	$L = \frac{WS^2}{60}$
30	180	
35	245	
40	320	
45	540	L = WS

For lateral transitions other than 12', use formula for L shown in the notes column. Where:
L = Length of taper in feet
W = Width of lateral transition in feet
S = Posted speed limit (mph)

SYMBOLS

- Work Area
- Sign With 18"x 18" (Min.) Orange Flag And Type B Light
- Channelizing Device (See Index No. 600)
- Work Zone Sign
- Advance Warning Arrow Board
- Stop Bar
- Lane Identification + Direction of Traffic

GENERAL NOTES

1. If the work space extends across a crosswalk, the crosswalk should be closed using the information in Index No. 660.
2. Signs are required on the median side for divided highways.
3. The two channelizing devices directly in front and directly at the end of the work area may be omitted provided vehicles in the work area have high-intensity rotating, flashing, oscillating, or strobe lights operating.
4. Within the lateral transitions, the maximum spacing between cones and tubular markers shall be 25'. Maximum spacing between Type I or Type II barricades or vertical panels or drums shall be based on the speed limit as follows: 15' up to 25 MPH; 30' for 30-40 MPH; 50' for 45 MPH.

   Spacing for devices parallel to the travel lanes shall be 25' centers for cones or tubular markers and 50' centers for Type I or Type II barricades or vertical panels or drums for 250', thereafter, cones or tubular markers at 50' centers and Type I or Type II barricades or vertical panels or drums at 100' centers.
5. For general TCZ requirements and additional information, refer to Index No. 600.

C:\d\projects\standards\roadway\00600-s\00618-01.dgn rd960rh 2:08:35 PM 6/28/2012

LAST REVISION	REVISION	DESCRIPTION:			INDEX NO.	SHEET NO.
07/01/09			FDOT DESIGN STANDARDS 2013	MULTILANE, WORK IN INTERSECTION TWO LANES CLOSED - 45MPH OR LESS	618	1

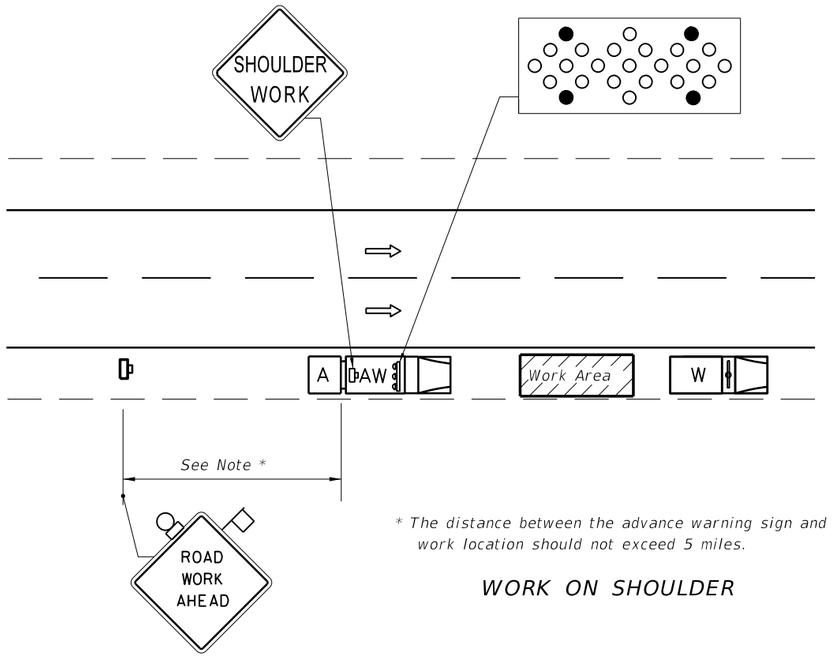

* The distance between the advance warning sign and the work location should not exceed 5 miles.

WORK ON SHOULDER

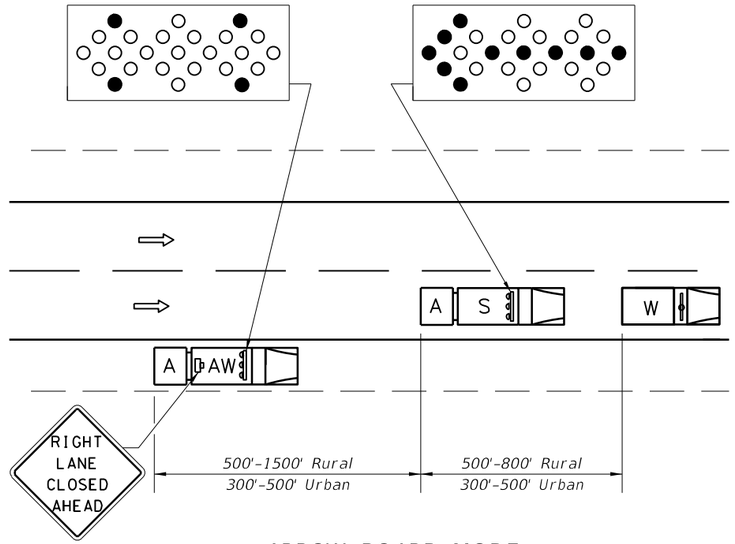

ARROW BOARD MODE
MOVE/MERGE

Where adequate shoulder width is not available, the advance warning vehicle may drive in the lane.

WORK WITHIN TRAVEL LANE

SYMBOLS

- W — Work Vehicle
- S — Shadow (S) Vehicle with Arrow Board
- AW — Advance Warning (AW) Vehicle with Arrow Board and Sign Message or Changeable Message Sign
- A — Truck/Trailer Mounted Attenuator (TMA)
- Lane Identification And Direction Of Traffic
- Arrow Board

GENERAL NOTES

1. These illustrations are representative of general conditions.
2. The figures illustrate closing the right shoulder or right lanes for various lane configurations. When work is required on left side of roadways, the inverted plan is to be applied. The intent of this index is to allow passing on only one side of the work convoy.
3. Arrow boards shall not be obscured by equipment, supplies, signs, or the enclosure.
4. Vehicle-mounted signs shall be mounted with the bottom of the sign at a minimum height of 48 inches above the pavement. Vehicle mounted changeable message signs may be used in lieu of truck mounted static signs. Changeable message signs shall flash alternately to read "Left or Right Lane" or "Two Left or Two Right Lanes", "Closed Ahead", and the arrow symbol. Arrow boards shall not be used with truck mounted changeable message signs. Sign legends shall be covered or turned from view when work is not in progress.
5. On freeway facilities (interstates, toll roads, and expressways), a traffic control officer is required for all nighttime operations for work within the travel lane.
6. If the work vehicle speed exceeds the minimum legal speed limit on limited access facilities and one half the posted speed limit on other facilities, the Engineer may delete requirements for shadow vehicle and attenuator. The work vehicle will be required to have an arrow board and sign message.
7. Where work activities within 2' of the edge of travel way are Incidental (i.e. Mowing, Litter Removal), the Engineer may delete requirements for signs and the advance warning vehicle provided vehicles in the work area have high-intensity rotating, flashing, oscillating, or strobe lights operating.
8. Work, Shadow, and Advance Warning Vehicles shall have high-intensity, rotating, flashing, oscillating, or strobe lights operating.
9. Functional two-way communication is required between all vehicles in the mobile operation convoy.
10. For general TCZ requirements and additional information, refer to Index No. 600.

C:\d\projects\standards\roadway\00600-s\00619-01.dgn
rd960rh
2:08:38 PM
6/28/2012

LAST REVISION	REVISION	DESCRIPTION:		FDOT DESIGN STANDARDS 2013	MULTILANE, MOBILE OPERATIONS WORK ON SHOULDER, WORK WITHIN TRAVEL WAY	INDEX NO.	SHEET NO.
07/01/12						619	1

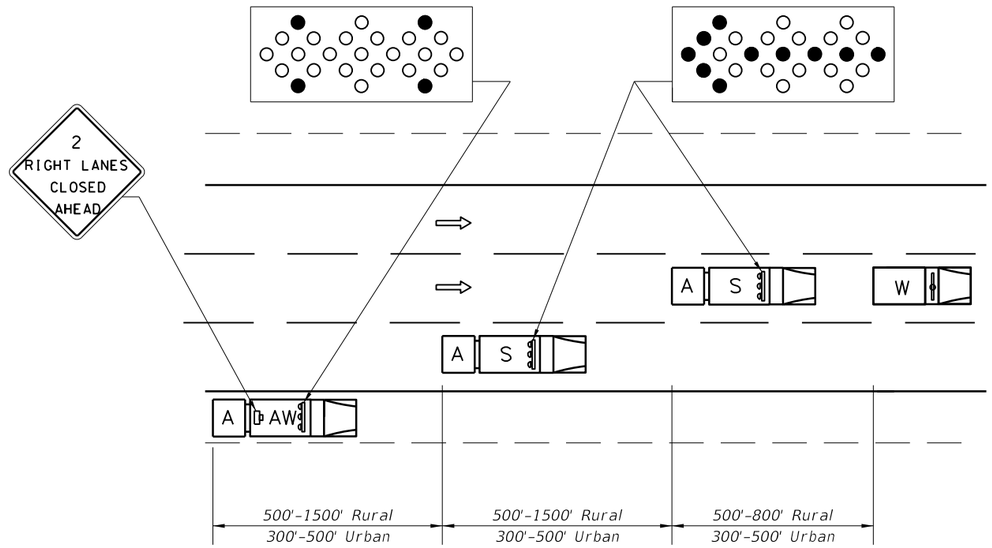

WORK WITHIN TRAVEL WAY, CENTER LANE OR OUTSIDE CENTERLINE

ARROW BOARD MODE
MOVE/MERGE

Where adequate shoulder width is not available, the advance warning vehicle may drive in the lane.

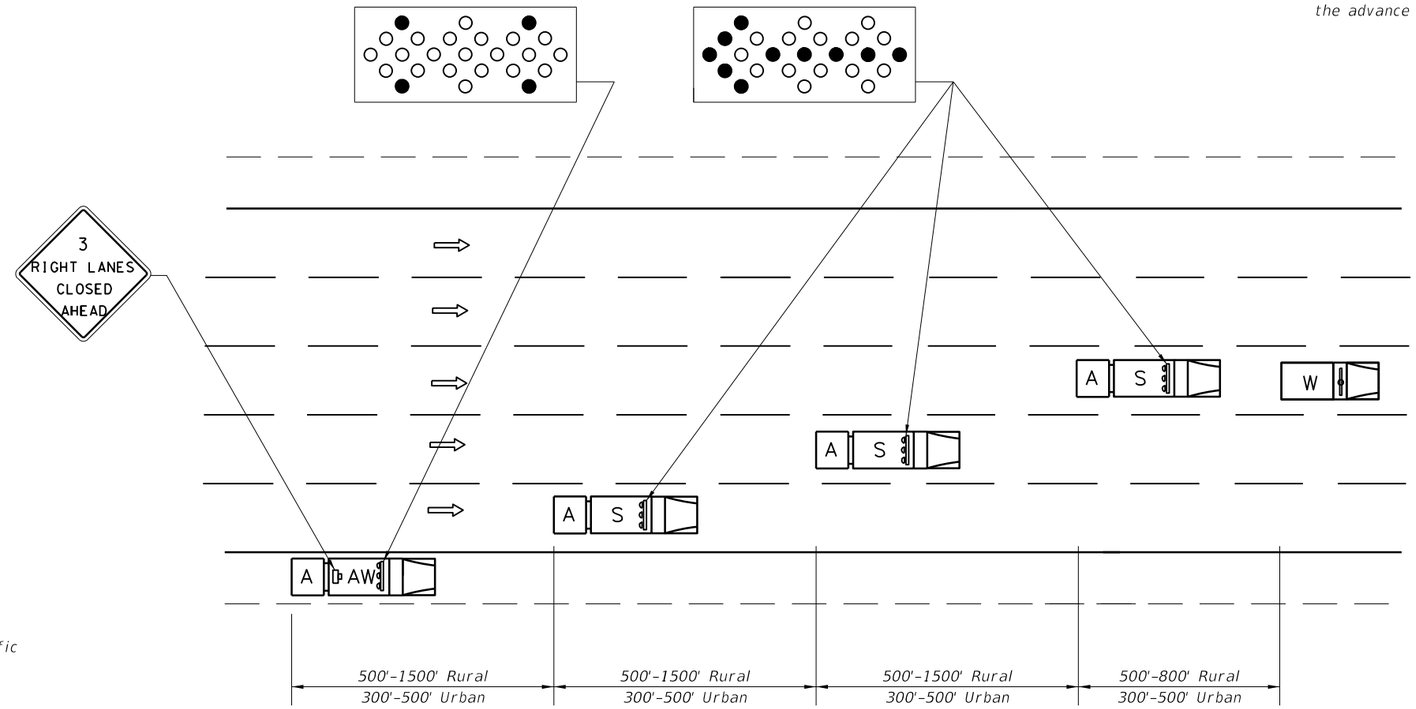

SYMBOLS

- W — *Work Vehicle*
- S — *Shadow (S) Vehicle with Arrow Board*
- AW — *Advance Warning (AW) Vehicle with Arrow Board and Sign Message or Changeable Message Sign*
- A — *Truck/Trailer Mounted Attenuator (TMA)*
- *Lane Identification And Direction Of Traffic*
- *Arrow Board*

WORK WITHIN TRAVEL LANE

LAST REVISION	REVISION	DESCRIPTION:			INDEX NO.	SHEET NO.
07/01/12			FDOT DESIGN STANDARDS 2013	MULTILANE, MOBILE OPERATIONS WORK ON SHOULDER, WORK WITHIN TRAVEL WAY	619	2

C:\d\projects\standards\roadway\00600-s\00619-02.dgn
rd960rh
2:08:40 PM
6/28/2012

GENERAL NOTES

1. TWO-WAY TRAFFIC sign(s) shall be repeated every ¼ mile in each direction, throughout the tangent distance (T).

2. L (min.) = WS for speeds ≥ 45 mph

   $= \frac{WS^2}{60}$ for speeds ≤ 40 mph

   Where:
   W= Width of lateral transition in feet.
   S= Posted speed limit (mph).

3. Where the tangent distance (T) exceeds 250', spacing between Type I or II barricades or vertical panels or drums may be increased to 100' within the limits of the tangent, or post mounted delineators at 50' centers may be substituted for barricades, vertical panels or drums.

4. All existing pavement markings within the realignment which conflict with the revised traffic pattern are to be removed and removable pavement markings used for making new edge lines.

5. When side roads, cross roads or interchanges intersects the highway within the TTC zone, additional TTC devices shall be placed in accordance with other applicable TCZ Indexes.

6. For general TCZ requirements and additional information, refer to Index No. 600.

SCHEME APPLICATIONS

Scheme 1: Restricted Construction Limits.

Scheme 2: Unrestricted Construction Limits And Light To Moderate Traffic.

Scheme 3: Unrestricted Construction Limits And Moderate To Heavy Traffic.

Where: Construction Limits Are The Outward Beginning Or Ending Of Lane Reductions.

Where: Unless A Specific Scheme Is Called For In The Plans, Scheme Selection Shall Be At The Contractor's Option And As Approved By The Engineer.

SYMBOLS

- Work Area
- Sign With 18" x 18" (Min.) Orange Flag And Type B Light
- Channelizing Device (See Index No. 600)
- Work Zone Sign
- Advance Warning Arrow Board
- Lane Identification + Direction of Traffic

CONDITIONS

WHERE ANY VEHICLE, EQUIPMENT, WORKERS OR THEIR ACTIVITIES REQUIRE THE CLOSURE OF ONE ROADWAY AND THE OPPOSING ROADWAY IS CONVERTED TO TEMPORARY TWO-WAY TRAVEL BY WAY OF CROSSOVERS.

C:\d\projects\standards\roadway\00600-s\00620-01.dgn
rd960rh
2:08:42 PM
6/28/2012

LAST REVISION	REVISION	DESCRIPTION:		FDOT DESIGN STANDARDS 2013	MULTILANE, DIVIDED, TEMPORARY DIVERSION CONNECTION	INDEX NO.	SHEET NO.
07/01/09						620	1

BUFFER LENGTH (FEET)		
Construction Zone Speed MPH	X (ft)	Z (ft)
60-70	560	630
55	360	510
≤50	180	380

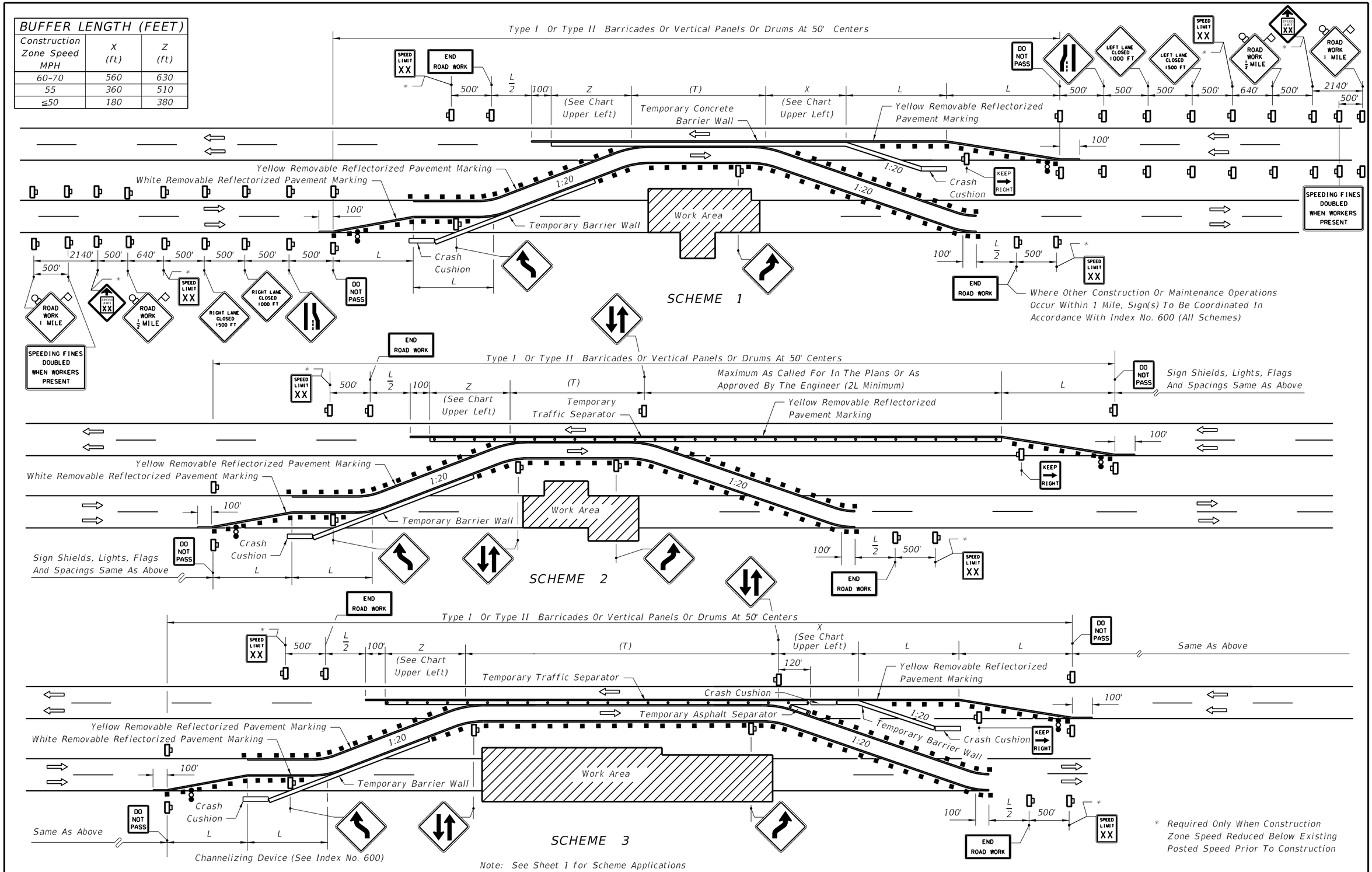

Note: See Sheet 1 for Scheme Applications

LAST REVISION	REVISION	DESCRIPTION:		FDOT DESIGN STANDARDS 2013	MULTILANE, DIVIDED, TEMPORARY DIVERSION CONNECTION	INDEX NO.	SHEET NO.
07/01/09						620	2

C:\d\projects\standards\roadway\00600-s\00620-02.dgn rd960rh 2:08:44 PM 6/28/2012

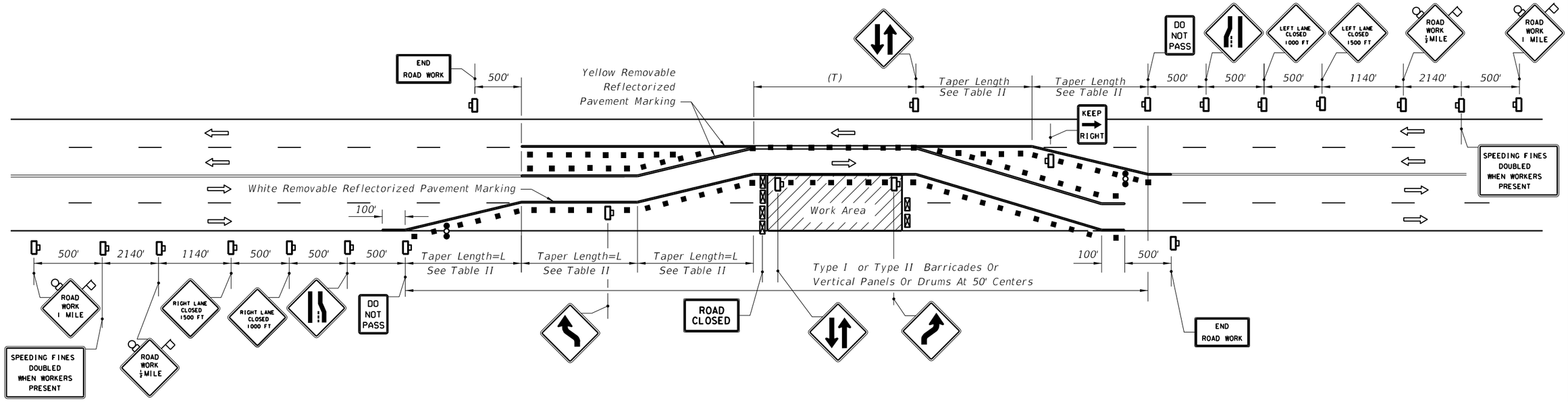

SYMBOLS

- Work Area
- Sign With 18"x 18" (Min.) Orange Flag And Type B Light
- Channelizing Device (See Index No. 600)
- Type III Barricade
- Work Zone Sign
- Advance Warning Arrow Board
- Lane Identification + Direction of Traffic

GENERAL NOTES

1. TWO-WAY TRAFFIC signs shall be repeated every ¼ mile in each direction, through the tangent distance (T).
2. When paved shoulders having a width of 8 ft. or more are closed, channelizing devices shall be used to close the shoulder in advance of the merging taper to direct vehicular traffic to remain within the travel way. See Index No. 612 for shoulder taper formulas.
3. Where the tangent distance (T) exceeds 250', spacing between cones or tubular markers may be increased to 50' or spacing between Type I or Type II barricades or vertical panels or drums may be increased to 100' within the limits of the tangent.
4. This index does not apply when work is being performed in the middle lane(s) of a six or more lane highway. Special maintenance of traffic details will be required.
5. When a side road intersects the highway within the TTC zone, additional TTC devices shall be placed in accordance with other applicable TCZ Indexes.
6. For general TCZ requirements and additional information, refer to Index No. 600.

Table II
Taper Length - Merge
(12' Lateral Transition)

Speed (mph)	L (ft.)	Notes (Merge)
25	125	$L=\frac{WS^2}{60}$
30	180	
35	245	
40	320	
45	540	L=WS
50	600	
55	660	
60	720	
65	780	
70	840	

For lateral transitions other than 12' use formula for L shown in the notes column.
Where:
L = Length of taper in feet
W = Width of lateral transition in feet
S = Posted speed limit (mph)

CONDITIONS

WHERE ANY VEHICLE, EQUIPMENT, WORKERS OR THEIR ACTIVITIES REQUIRE THE CLOSURE OF THE LANES IN ONE DIRECTION AND A DIVERSION IS PROVIDED BY UTILIZING ONE LANE OF THE OPPOSING TRAFFIC LANES.

C:\d\projects\standards\roadway\00600-s\00621-01.dgn
rd960rh
2:08:46 PM
6/28/2012

LAST REVISION	REVISION	DESCRIPTION:		FDOT DESIGN STANDARDS 2013	MULTILANE, UNDIVIDED, TEMPORARY DIVERSION CONNECTION	INDEX NO.	SHEET NO.
07/01/09						621	1

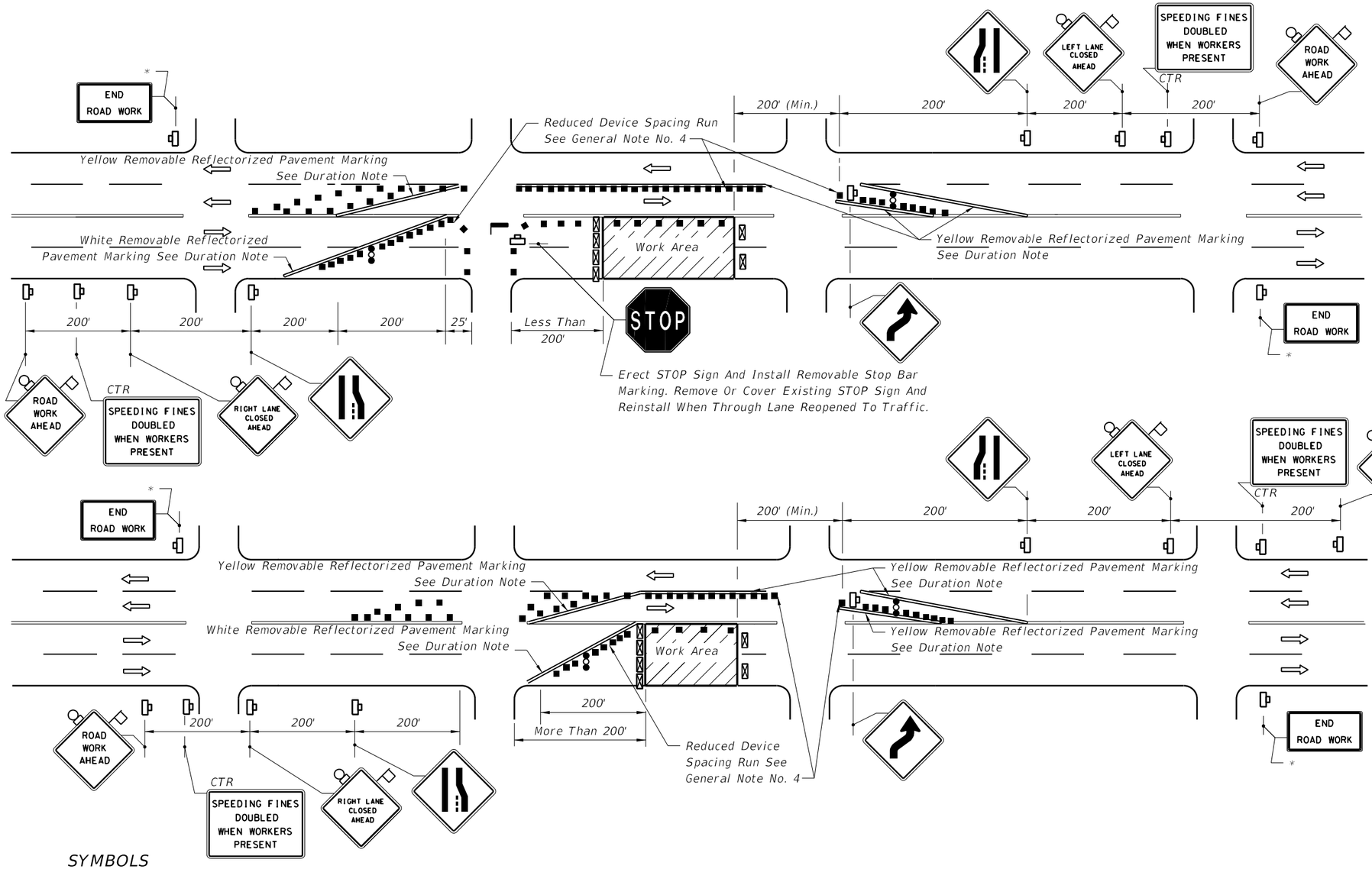

CONDITIONS

WHERE ANY VEHICLE, EQUIPMENT, WORKERS OR THEIR ACTIVITIES ENCROACH ON THE PAVEMENT REQUIRING THE CLOSURE OF TRAFFIC LANES IN ONE DIRECTION AND THE USE OF ONE OPPOSING TRAFFIC LANE TO MAINTAIN TWO-WAY TRAFFIC, FOR WORK AREA LESS THAN 200' FROM INTERSECTION, FOR A PERIOD OF MORE THAN 60 MINUTES.

CONDITIONS

WHERE ANY VEHICLE, EQUIPMENT, WORKERS OR THEIR ACTIVITIES ENCROACH ON THE PAVEMENT REQUIRING THE CLOSURE OF TRAFFIC LANES IN ONE DIRECTION AND THE USE OF ONE OPPOSING TRAFFIC LANE TO MAINTAIN TWO-WAY TRAFFIC, FOR WORK AREA 200' OR MORE FROM INTERSECTION, FOR A PERIOD OF MORE THAN 60 MINUTES.

* *When Other Construction Or Maintenance Operations Occur Within 1 Mile, Sign To Be Omitted And Signing To Be Coordinated In Accordance With Index No. 600.*

SYMBOLS

- *Work Area*
- *Sign With 18" x 18" (Min.) Orange Flag And Type B Light*
- *Channelizing Device (See Index No. 600)*
- *Type III Barricade*
- *Work Zone Sign*
- *Advance Warning Arrow Board*
- *Stop Bar*
- *Lane Identification + Direction of Traffic*

GENERAL NOTES

1. *When vehicles in a parking zone block the line of sight to TCZ signs or when TCZ signs encroach on a normal pedestrian walkway, the signs shall be post mounted and located in accordance with Index No. 17302.*
2. *Dual signs are required for divided roadways.*
3. *Channelizing devices are to be spaced with Type I or Type II barricades or vertical panels or drums at 30' centers in tapers, 50' centers in tangent sections and 15' centers where reduced device spacing runs are identified in the drawing.*
4. *For general TCZ requirements and additional information, refer to Index No. 600.*

DURATION NOTE

Removable reflectorized pavement markings shall be used when closure time exceeds one daylight period.

C:\d\projects\standards\roadway\00600-s\00622-01.dgn
rd960rh
2:08:48 PM
6/28/2012

LAST REVISION	REVISION	DESCRIPTION:				
07/01/09			FDOT DESIGN STANDARDS 2013	MULTILANE WORK NEAR INTERSECTION-TEMPORARY DIVERSION CONNECTION - 35MPH OR LESS	INDEX NO. 622	SHEET NO. 1

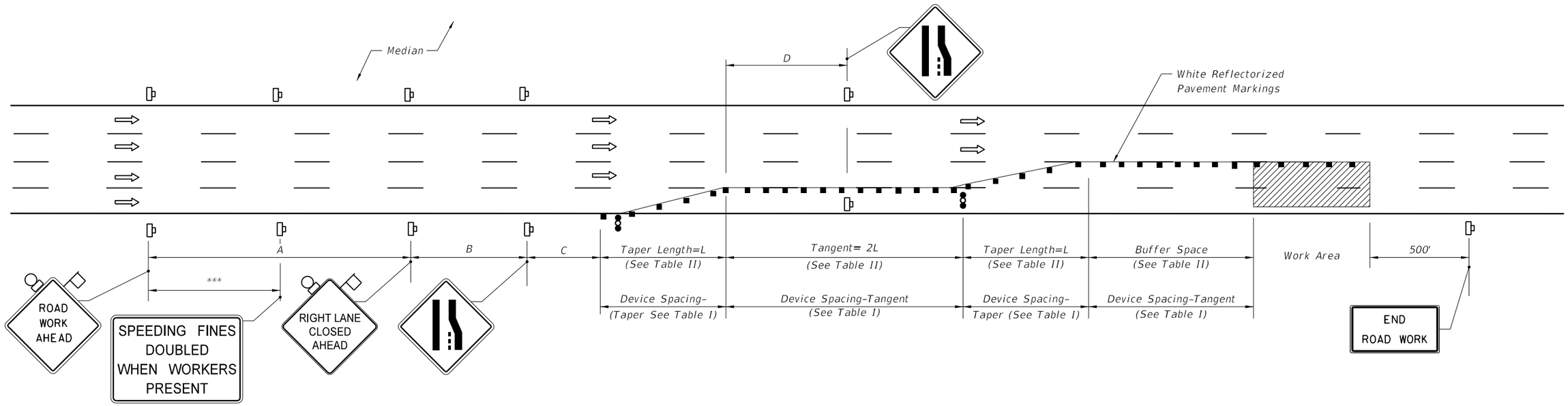

DISTANCE BETWEEN SIGNS				
Speed	Spacing (ft.)			
	A	B	C	D**
40 mph or less	200	200	200	L
45 mph	350	350	350	L
50 mph	500	500	500	L
*55 mph or greater	2640	1640	1000	L

* The ROAD WORK 1 MILE sign may be used as an alternate to the ROAD WORK AHEAD sign MILE sign may be used as an alternate to the RIGHT LANE CLOSED AHEAD sign.

** See Table II for L

*** 500' beyond the ROAD WORK AHEAD sign or midway between signs whichever is less.

Table I Device Spacing				
Speed (mph)	Max. Distance Between Devices (ft.)			
	Cones or Tubular Markers		Type I or Type II Barricades or Vertical Panels or Drums	
	Taper	Tangent	Taper	Tangent
25	25	50	25	50
30 to 45	25	50	30	50
50 to 70	25	50	50	100

Table II Buffer Space and Taper Length				
Speed (mph)	Buffer Space	Taper Length (12' Lateral Transition)		Tangent
	Dist. (ft.)	L (ft.)	Notes (Merge)	2L (ft.)
25	155	125	$L = \frac{WS^2}{60}$	250
30	200	180		360
35	250	245		490
40	305	320		640
45	360	540	L = WS	1080
50	425	600		1200
55	495	660		1320
60	570	720		1440
65	645	780		1560
70	730	840		1680

When Buffer Space cannot be attained due to geometric constraints, the greatest attainable length shall be used, but not less than 200 ft.

For lateral transitions other than 12', use formula for L shown in the notes column.
Where:
L= Length of taper in feet
W= Width of lateral transition in feet
S= Posted speed limit (mph)

GENERAL NOTES

1. Work operations shall be confined to the two outside traffic lanes, leaving the adjacent lane(s) open to traffic.
2. On undivided highways the median signs as shown are to be omitted.
3. When work is performed in the median lane on divided highways, the channelizing device plan is inverted and left lanes closed and lane ends signs substituted for the right lanes closed and lane end signs.
4. When a side road intersects the highway within the TTC zone, additional TTC devices shall be placed in accordance with other applicable TCZ Indexes.
5. For general TCZ requirements and additional information, refer to Index No. 600.
6. When paved shoulders having a width of 8 ft. or more are closed, channelizing devices shall be used to close the shoulder in advance of the merging taper to direct vehicular traffic to remain within the travel way. See Index No. 612 for shoulder taper formulas.

SYMBOLS

- Work Area
- Sign With 18"x 18" (Min.) Orange Flag And Type B Light
- Channelizing Device (See Index No. 600)
- Work Zone Sign
- Advance Warning Arrow Board

DURATION

Temporary white edgeline may be omitted for work operations less than three (3) days.

CONDITIONS

WHERE ANY VEHICLE, EQUIPMENT, WORKERS OR THEIR ACTIVITIES ENCROACH ON THE TWO LANES ADJACENT TO EITHER SHOULDER.

C:\d\projects\standards\roadway\00600-s\00623-01.dgn
rd960rh
2:08:50 PM
6/28/2012

LAST REVISION	REVISION	DESCRIPTION:				
07/01/10			FDOT DESIGN STANDARDS 2013	MULTILANE, WORK WITHIN THE TRAVEL WAY DOUBLE LANE CLOSURE	INDEX NO. 623	SHEET NO. 1

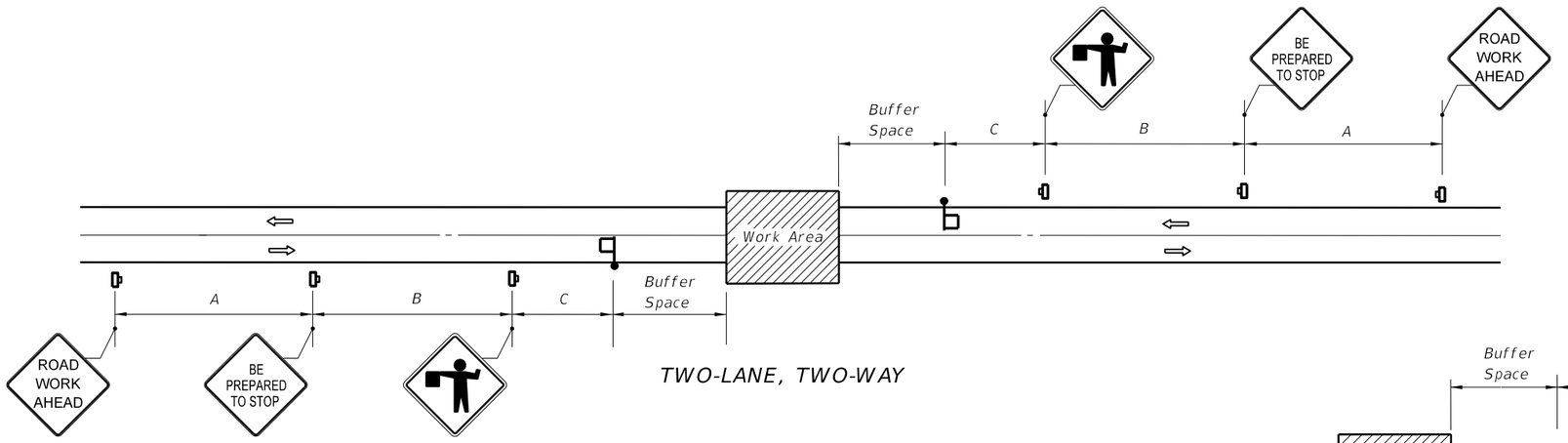

TWO-LANE, TWO-WAY

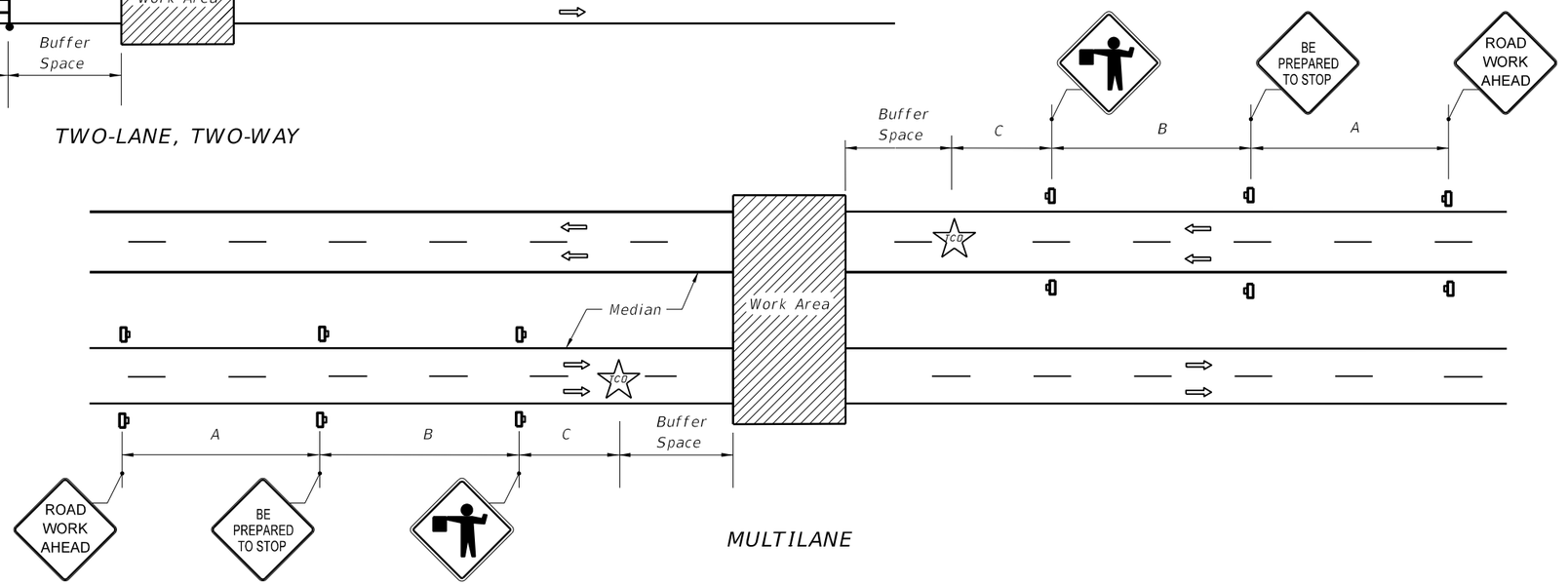

MULTILANE

BUFFER SPACE	
Speed (mph)	Dist. (ft.)
25	155
30	200
35	250
40	305
45	360
50	425
55	495
60	570
65	645

DISTANCE BETWEEN SIGNS			
Speed (mph)	Spacing (ft.)		
	A	B	C
40 or less	200	200	200
45	350	350	350
50 or greater	500	500	500

SYMBOLS

- Work Area
- Sign
- Work Zone Sign
- Flagger
- Traffic Control Officer
- Lane Identification + Direction of Traffic

GENERAL NOTES

1. This Index does not apply to limited access facilities.
2. When a side road intersects the highway within the TTC zone, additional TTC devices shall be placed in accordance with applicable TCZ Indexes.
3. Traffic volume or complexity of the roadway may dictate additional devices, signs, flagmen and/or a traffic control officer.
4. The buffer space may be omitted if there are no sight obstructions to vehicles approaching the Flagger/Officer for distance equal to the buffer space.
5. The BE PREPARED TO STOP sign may be omitted if all of the following conditions are met:
   a. Speed limit is 45 mph or less.
   b. No sight obstructions to vehicles approaching the Flagger/Officer for a distance equal to the buffer space.
   c. Vehicles in the work area have high-intensity, rotating, flashing, oscillating, or strobe lights operating.
6. On undivided highways the median sign as shown are to be omitted.
7. For general TCZ requirements and additional information refer to FDOT Index No. 600.

CONDITIONS

PLANNED CLOSURE NOT EXCEEDING 5 MINUTES.

C:\d\projects\standards\roadway\00600-s\00625-01.dgn
rd960rh
2:08:52 PM
6/28/2012

LAST REVISION	REVISION	DESCRIPTION:				
07/01/09			FDOT DESIGN STANDARDS 2013	TEMPORARY ROAD CLOSURE 5 MINUTES OR LESS	INDEX NO. 625	SHEET NO. 1

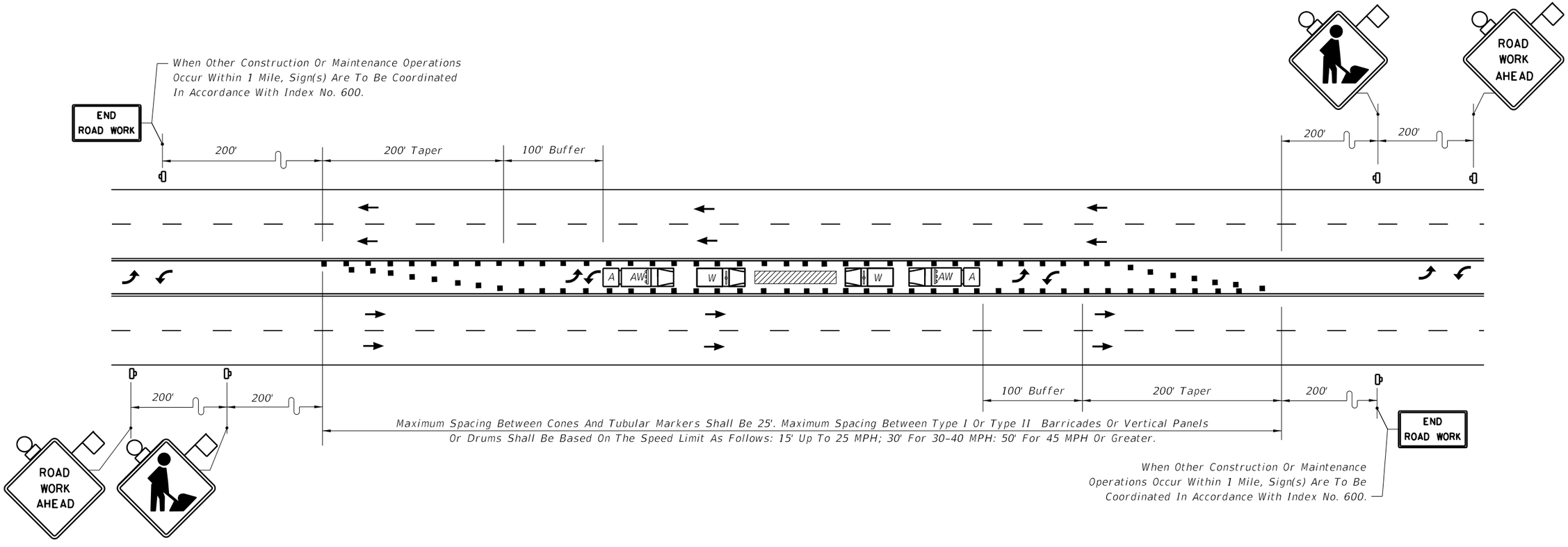

SYMBOLS

- Work Area
- Channelizing Device (See Index No. 600)
- Work Zone Sign
- W — Work Vehicle With Rotating/Strobe Lights
- X — Shadow (S) Or Advance Warning (AW) Vehicle with Advance Warning Arrow Board and Sign Message
- A — Truck/Trailer Mounted Attenuator (TMA)
- Sign With 18" x 18" (Min.) Orange Flag And Type B Light

GENERAL NOTES

1. Work operations shall be confined to two way left turn lane, leaving the adjacent lanes open to traffic.
2. Advance Warning Vehicle will have an Advanced Warning Arrow Board in the Warning Mode.
3. When a side road intersects the highway within the TTC zone, additional TTC devices shall be placed in accordance with other applicable TCZ Indexes.
4. For general TCZ requirements and additional information, refer to Index No. 600.

CONDITIONS

WHERE ANY VEHICLE, EQUIPMENT, WORKERS OR THEIR ACTIVITIES ARE BEING CONDUCTED IN THE TWO WAY LEFT TURN LANE.

LAST REVISION	REVISION	DESCRIPTION:				
07/01/10			FDOT DESIGN STANDARDS 2013	TWO WAY LEFT TURN LANE CLOSURE	INDEX NO. 628	SHEET NO. 1

C:\d\projects\standards\roadway\00600-s\00628-01.dgn
rd960rh
2:09:01 PM
6/28/2012

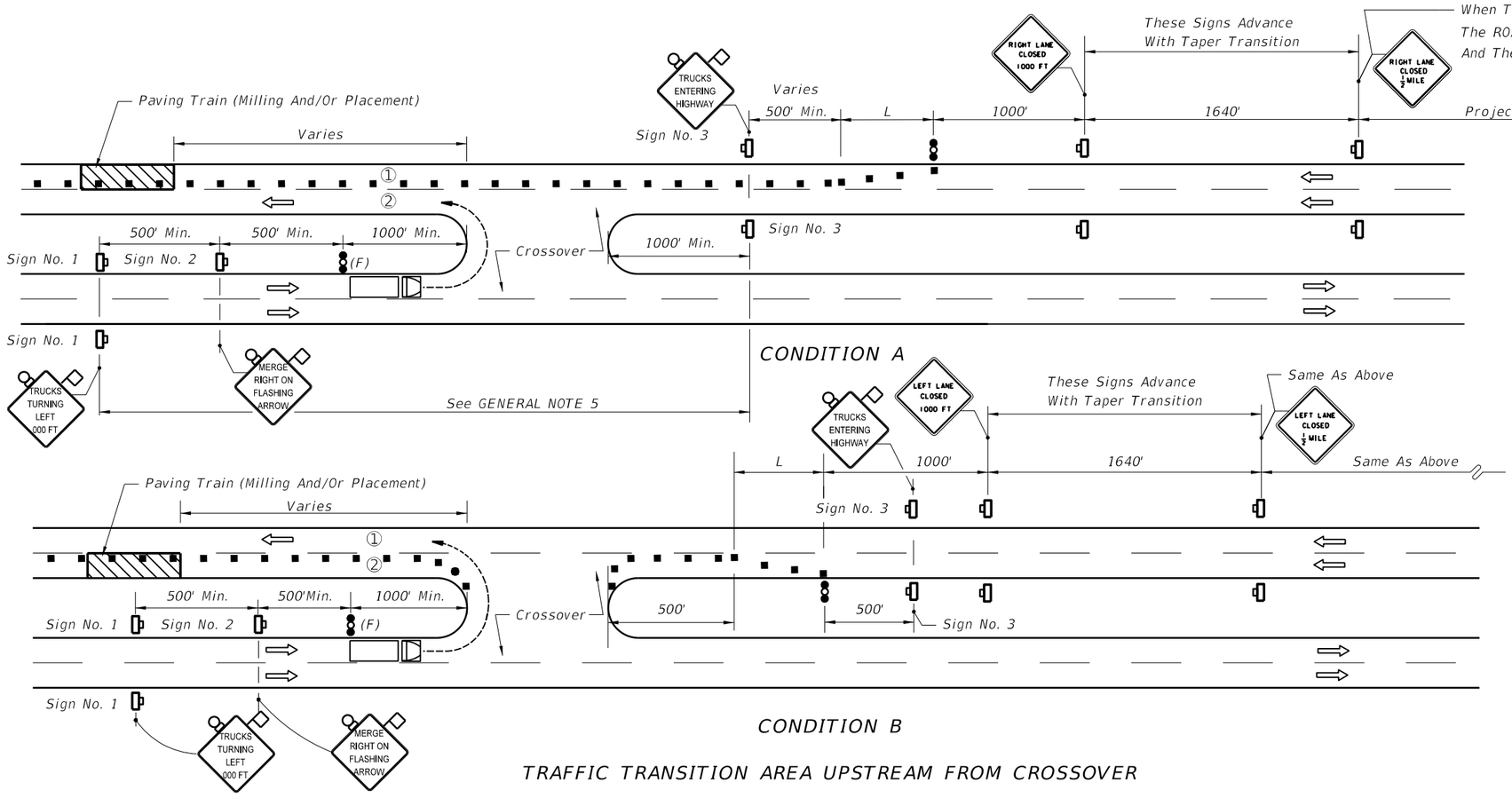

TRAFFIC TRANSITION AREA UPSTREAM FROM CROSSOVER

CASE I

SYMBOLS

- Work Area
- Channelizing Device (See Index No. 600)
- Work Zone Sign
- Sign With 18"x 18" (Min.) Orange Flag And Type B Light
- Advance Warning Arrow Board – Type C (48"x 96")
- (F) Advance Warning Arrow Board – Type C (48"x 96") Trailer Mounted And Actuated By Flagger Upon Approach Of The Work Vehicle
- Work Vehicle
- Lane Number
- Lane Identification + Direction of Traffic

CONDITION A

WHEN THE PAVING TRAIN IS IN LANE ① THE U-TURNING VEHICLE SHALL CAUTIOUSLY TURN INTO LANE ② AND PROCEED IN LANE ② TO THE FRONT OF THE TRAIN.

CONDITION B

WHEN THE PAVING TRAIN IS IN LANE ② THE U-TURNING VEHICLE SHALL CAUTIOUSLY TURN INTO LANE ①, AND PROCEED IN LANE ① TO THE FRONT OF THE PAVING TRAIN.

CONDITION A & B

THE ADVANCE WARNING ARROW BOARDS ARE REQUIRED. UNDER NO CIRCUMSTANCES WILL THE TRAFFIC TRANSITION BE LOCATED WITHIN THE LIMITS OF THE CROSSOVER.

GENERAL NOTES

1. This index does not apply to limited access facilities.

2. When crossovers do not exist, the contractor will construct temporary crossovers in accordance with Index No. 631.

3. L = Length of taper in feet:
   = WS for speeds ≥ 45 mph
   = $\frac{WS^2}{60}$ for speeds ≤ 40 mph

   Where:
   W = Width of lateral transition in feet.
   S = Posted speed limit (mph).

4. Within the lateral transitions, the maximum spacing between cones and tubular markers shall be 25'. Maximum spacing between Type I or Type II barricades or vertical panels or drums shall be based on the speed limit as follows: 15' up to 25 MPH; 30' for 30–40 MPH; 50' for 45 MPH or greater.

   Spacing for devices parallel to the travel lanes shall be 25' centers for cones or tubular markers and 50' for Type I or Type II barricades or vertical panels or drums.

5. For Case I, Condition A, when the median width is too narrow for trucks to make turns into Lane No. 2, Sign Nos. 1, 2, 3 and the Flagger Actuated Advance Warning Arrow Board shall be moved ahead to a crossover in advance of the paving lane taper. Project advance warning signs (not shown) shall be located in advance of the relocated Sign No. 3.

6. For Case II, Conditions A & B, when the median width is too narrow for trucks to make turns into Lane No. 2, Sign Nos. 1, 2, 3 and the Flagger Actuated Advance Warning Arrow Board shall be moved ahead to a crossover in advance of the 'RIGHT LANE CLOSED ½ MILE' sign. Project advance warning signs (not shown) shall be located in advance of the relocated Sign No. 3.

C:\d\projects\standards\roadway\00600-s\00630-01.dgn
rd960rh
2:09:02 PM
6/28/2012

LAST REVISION	REVISION	DESCRIPTION:			INDEX NO.	SHEET NO.
07/01/09			FDOT DESIGN STANDARDS 2013	CROSSOVER FOR PAVING TRAIN OPERATIONS, RURAL	630	1

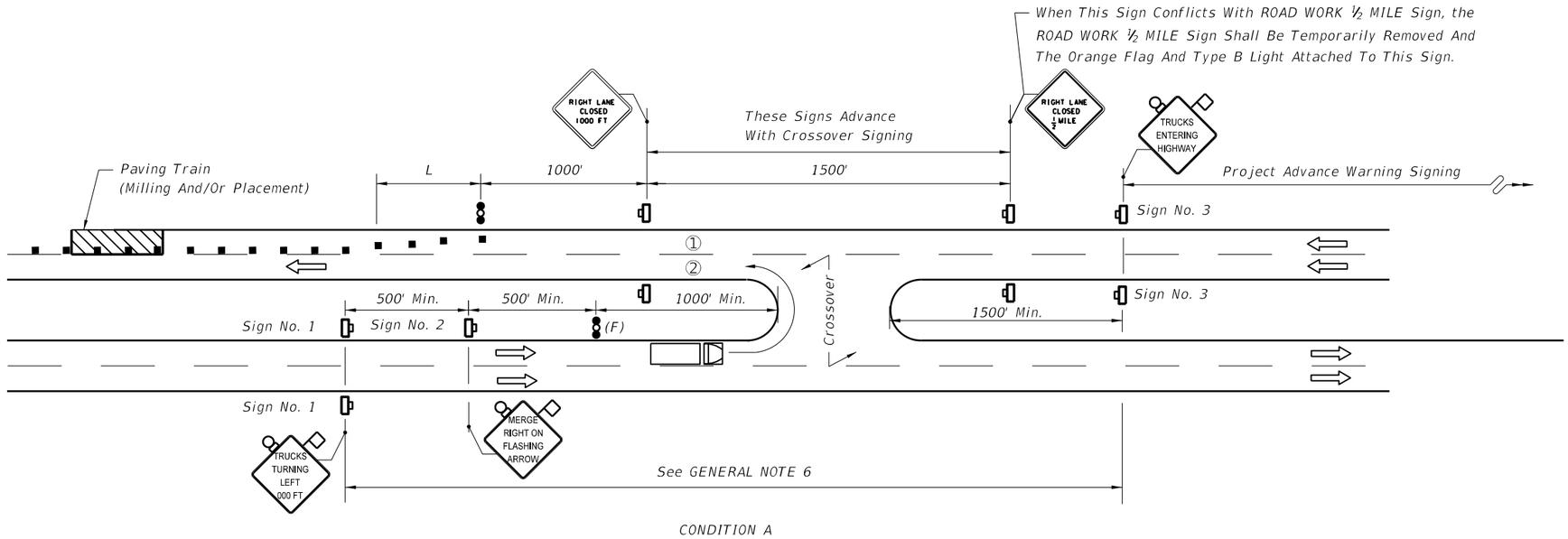

CONDITION A

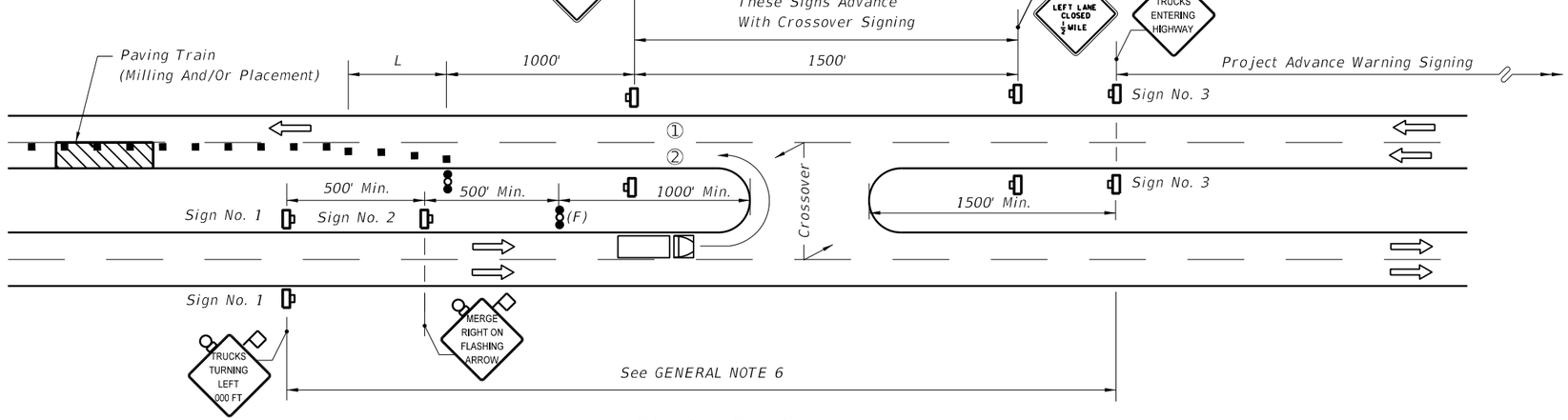

CONDITION B

TRAFFIC TRANSITION AREA DOWNSTREAM FROM CROSSOVER

CASE II

CONDITION A

WHEN THE PAVING TRAIN IS IN LANE ① THE U-TURNING VEHICLE SHALL CAUTIOUSLY TURN INTO LANE ② AND PROCEED IN LANE ② TO THE FRONT OF THE TRAIN.

CONDITION B

WHEN THE PAVING TRAIN IS IN LANE ② THE U-TURNING VEHICLE SHALL TURN INTO LANE ②, CAUTIOUSLY MERGE INTO LANE ① AND PROCEED TO THE FRONT OF THE PAVING TRAIN.

CONDITION A & B

THE ADVANCE WARNING ARROW BOARD IS REQUIRED. UNDER NO CIRCUMSTANCES WILL THE TRAFFIC TRANSITION BE LOCATED WITHIN THE LIMITS OF THE CROSSOVER.

Note: See Sheet 1 for General Notes.

C:\d\projects\standards\roadway\00600-s\00630-02.dgn
rd960rh
2:09:05 PM
6/28/2012

LAST REVISION	REVISION	DESCRIPTION:			INDEX NO.	SHEET NO.
07/01/09			FDOT DESIGN STANDARDS 2013	CROSSOVER FOR PAVING TRAIN OPERATIONS, RURAL	630	2

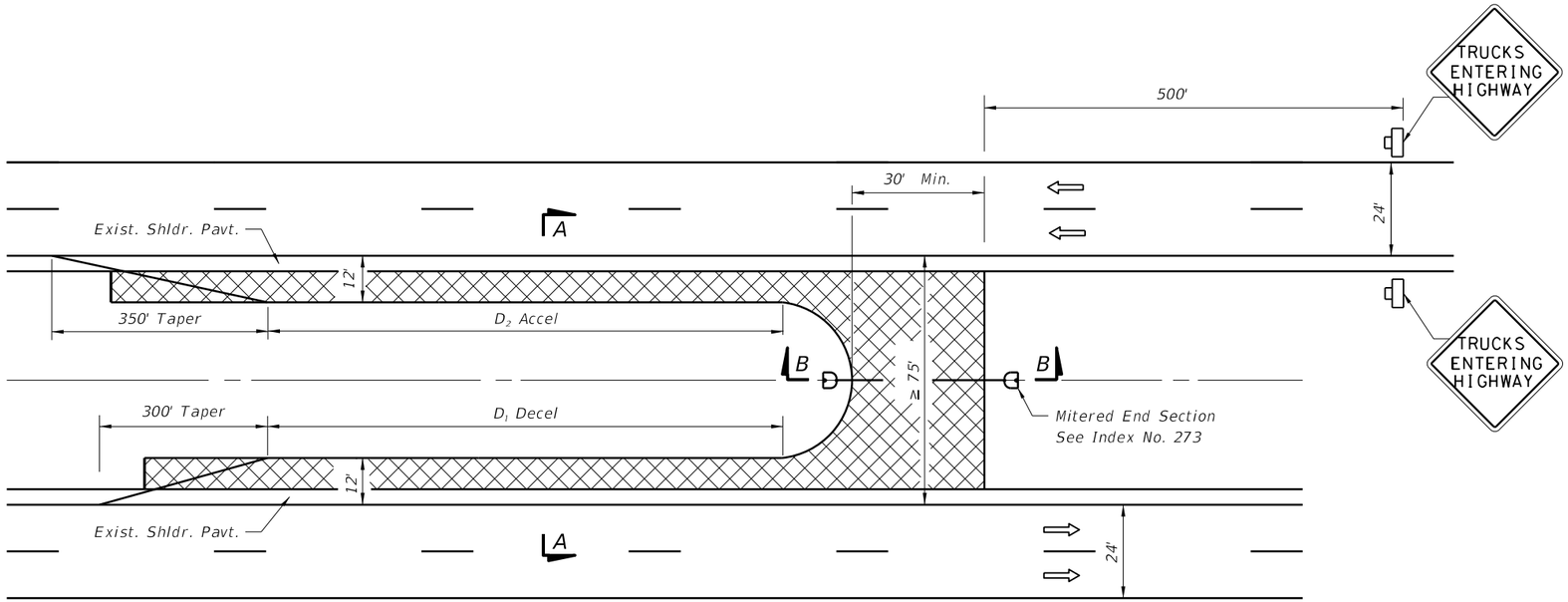

PLAN

LENGTH OF ACCESS LANES (Ft.)		
Grade	D_1	D_2
2% or less	590'	1540'
3 to 4% Upgrade	530'	2310'
3 to 4% Downgrade	710'	925'

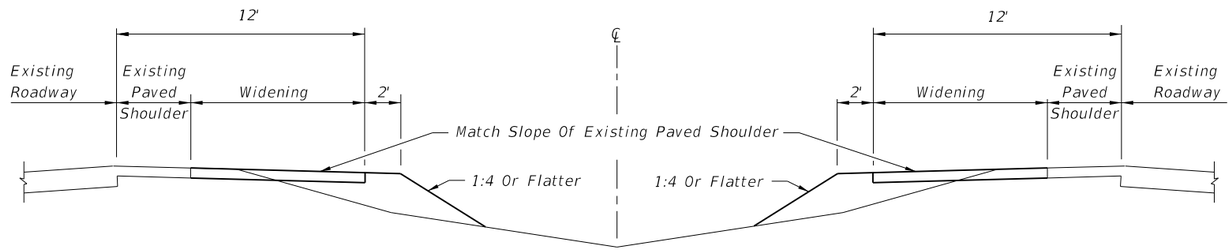

SECTION AA

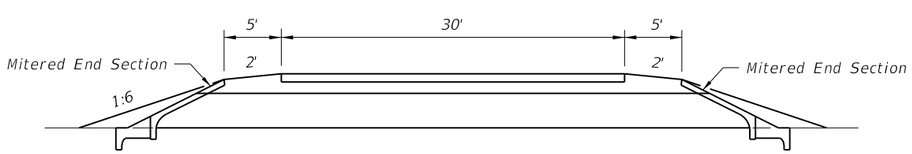

SECTION BB

SYMBOLS

- Work Zone Sign
- Lane Identification + Direction of Traffic
- Temporary Pavement

GENERAL NOTES

1. Temporary median crossovers shall be within the project limits and shall not be used for transporting materials to or from any other project. The acceleration-deceleration surfaces shall be paved. RAP material is acceptable for crossing surfacing.
2. Temporary median crossovers shall be located only in areas having adequate sight distance. On limited access facilities temporary median crossovers shall not be located within 1.5 miles of interchanges nor within 2000 ft. of acceleration-deceleration lanes at rest areas, other access openings or other highway service areas.
3. For paving train operations at permanent crossovers, see Index No. 630.
4. All traffic control devices are to be removed when crossover will not be in use for one hour or longer.
5. Trailer mounted advance warning panel may be used in lieu of advance warning vehicle.
6. When a crossover is no longer needed, all temporary construction shall be immediately removed and the area restored to its original condition.
7. Cost of construction, maintenance, removal and restoration work related to temporary crossovers shall be included in the contract unit price for Maintenance of Traffic, LS.
8. Temporary crossovers on limited access right of way and use of this Index are prohibited unless specifically permitted in the Contract Plans or Special Provisions. When permitted in the Contract Plans or Special Provisions and prior to construction of any temporary crossover, the Contractor must submit, in writing, a request identifying specific locations for approval by the Engineer.

TEMPORARY CROSSOVER FOR MEDIAN WIDTHS ≥ 75'

C:\d\projects\standards\roadway\00600-s\00631-01.dgn
rd960rh
2:09:07 PM
6/28/2012

LAST REVISION	REVISION	DESCRIPTION:		FDOT DESIGN STANDARDS 2013	TEMPORARY CROSSOVER	INDEX NO.	SHEET NO.
07/01/07						631	1

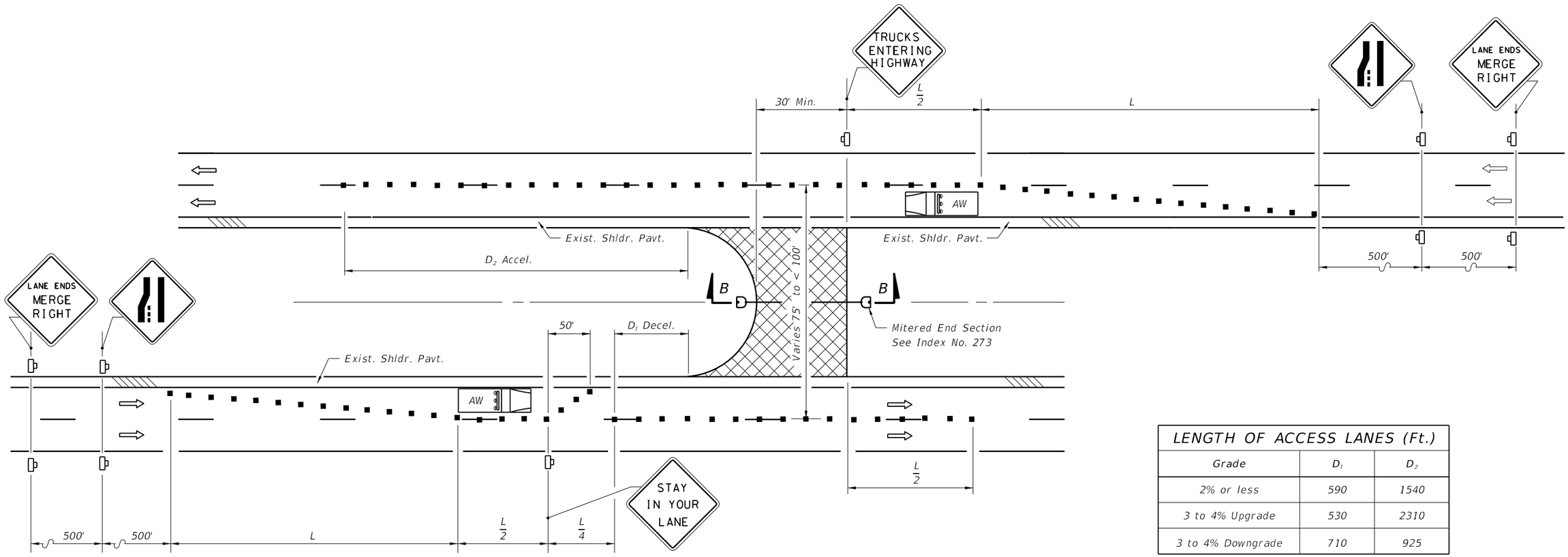

LENGTH OF ACCESS LANES (Ft.)

Grade	D_1	D_2
2% or less	590	1540
3 to 4% Upgrade	530	2310
3 to 4% Downgrade	710	925

SYMBOLS

- Temporary Pavement
- Work Zone Sign
- Channelizing Device (See Index No. 600)
- Advance Warning Vehicle
- Lane Identification + Direction of Traffic

Maximum Spacing Between Cones And Tubular Markers Shall Be 25'

L (Min.) = WS

S = Existing Posted Speed (MPH)

NOTE

1. A lane closure analysis will be required to determine the times of day that this crossover can be in operation.

TEMPORARY CROSSOVER FOR MEDIAN WIDTHS FROM 50' TO < 75'

C:\d\projects\standards\roadway\00600-s\00631-02.dgn
rd960rh
2:09:09 PM
6/28/2012

LAST REVISION	REVISION	DESCRIPTION:			INDEX NO.	SHEET NO.
07/01/09			FDOT DESIGN STANDARDS 2013	TEMPORARY CROSSOVER	631	2

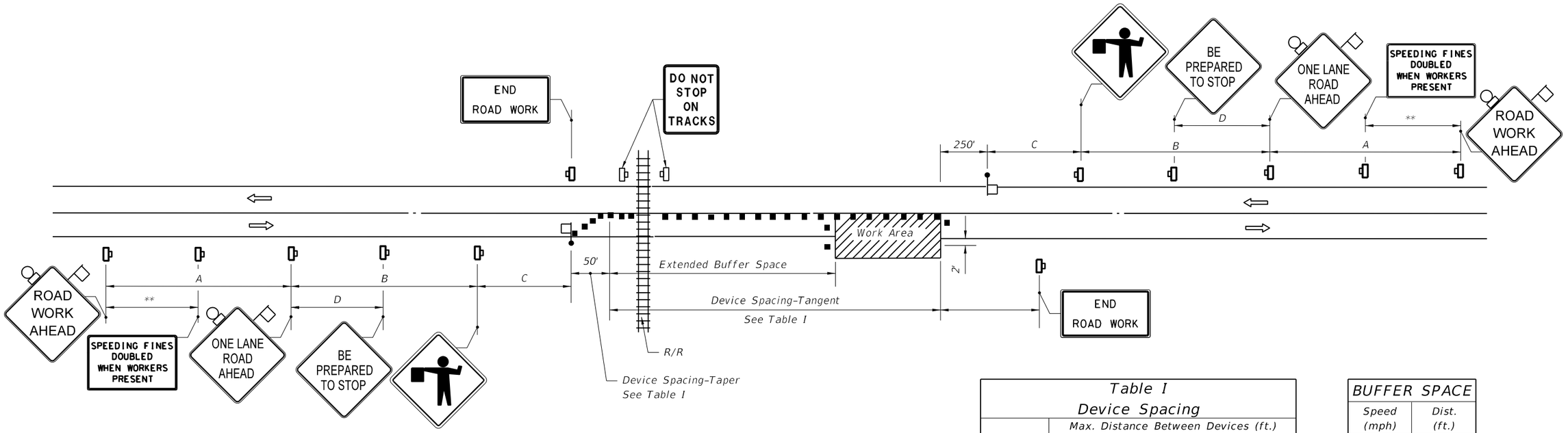

DISTANCE BETWEEN SIGNS

Speed	Spacing (ft.)			
	A	B	C	D ***
40 mph or less	200	200	200	100
45 mph	350	350	350	175
50 mph	500	500	500	250
*55 mph or greater	2640	1640	1000	500

* The ROAD WORK 1 MILE sign may be used as an alternate to the ROAD WORK AHEAD sign.

** 500' beyond the ROAD WORK AHEAD sign or midway between signs whichever is less.

*** BE PREPARED TO STOP sign may be omitted for speeds of 45 MPH or less.

SYMBOLS

- Work Area
- Sign With 18" x 18" (Min.) Orange Flag And Type B Light
- Channelizing Device (See Index No. 600)
- Work Zone Sign
- Flagger
- Lane Identification + Direction of Traffic

GENERAL NOTES

1. Work operations shall be confined to one traffic lane, leaving the opposite lane open to traffic.

2. Additional one-way control may be effected by the following means: (1) Flag-carrying vehicle; (2) Official vehicle; (3) Pilot vehicles; (4) Traffic signals.

   When flaggers are the sole means of one-way control, the flaggers shall be in sight of each other or in direct communication at all times.

3. The ONE-LANE ROAD signs are to be fully covered and the FLAGGER signs either removed or fully covered when no work is being performed and the highway is open to two-way traffic.

4. When a side road intersects the highway within the TTC zone, additional TTC devices shall be placed in accordance with other applicable TCZ Indexes.

5. The two channelizing devices directly in front of the work area and the one channelizing device directly at the end of the work area may be omitted provided vehicles in the work area have high-intensity rotating, flashing, oscillating, or strobe lights operating.

6. Discontinuance of extended buffer space will not occur until the queue length plus 300' is reached.

7. If the queuing of vehicles across active rail tracks cannot be avoided, a uniformed traffic control officer or flagger shall be provided at the highway-rail grade crossing to prevent vehicles from stopping within the highway-rail grade crossing, even if automatic warning devices are in place.

8. For general TCZ requirements and additional information, refer to Index No. 600.

Table I
Device Spacing

Speed (mph)	Max. Distance Between Devices (ft.)			
	Cones or Tubular Markers		Type I or Type II Barricades or Vertical Panels or Drums	
	Taper	Tangent	Taper	Tangent
25 to 45	20	50	20	50
50 to 70	20	50	20	100

DURATION NOTE

1. ROAD WORK AHEAD and the BE PREPARED TO STOP signs may be omitted if all of the following conditions are met:
   a. Work operations are 60 minutes or less.
   b. Speed limit is 45 mph or less.
   c. No sight obstructions to vehicles approaching the work area for a distance equal to the buffer space.
   d. Vehicles in the work area have high-intensity, rotating, flashing, oscillating, or strobe lights operating.
   e. Volume and complexity of the roadway has been considered.
   f. No queuing of vehicles across rail tracks.

BUFFER SPACE

Speed (mph)	Dist. (ft.)
25	155
30	200
35	250
40	305
45	360
50	425
55	495
60	570
65	645
70	730

When Buffer Space cannot be attained due to geometric constraints, the greatest attainable length shall be used, but not less than 200 ft.

CONDITIONS

WHERE ANY VEHICLE, EQUIPMENT, WORKERS OR THEIR ACTIVITIES ENCROACH THE AREA BETWEEN THE CENTERLINE AND A LINE 2' OUTSIDE THE EDGE OF TRAVEL WAY THAT REQUIRES A LANE CLOSURE IN THE VICINITY OF A RAILROAD CROSSING.

C:\d\projects\standards\roadway\00600-s\00635-01.dgn
rd960rh
2:09:11 PM
6/28/2012

LAST REVISION	REVISION	DESCRIPTION:				
07/01/09			FDOT DESIGN STANDARDS 2013	WORK IN VICINITY OF RAILROAD CROSSING	INDEX NO. 635	SHEET NO. 1

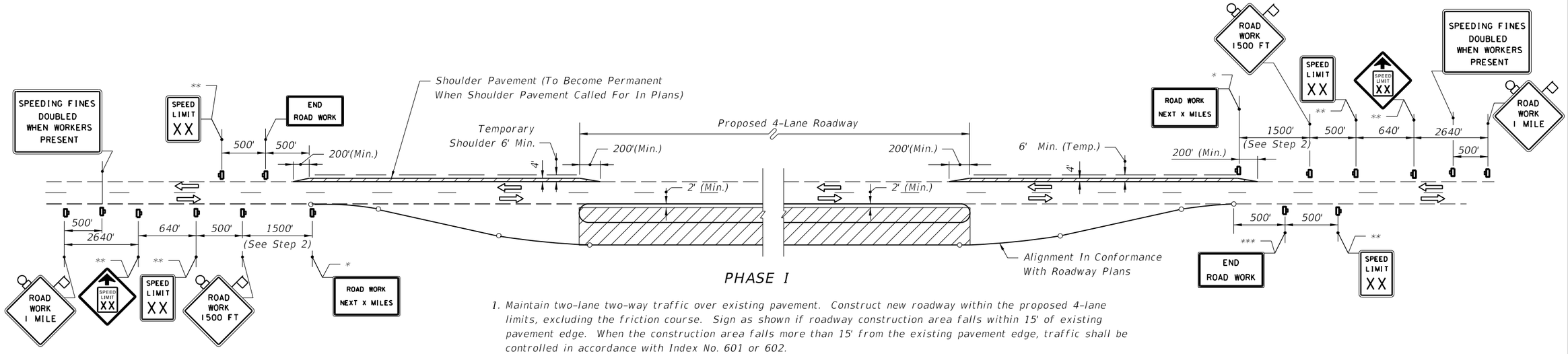

PHASE I

1. Maintain two-lane two-way traffic over existing pavement. Construct new roadway within the proposed 4-lane limits, excluding the friction course. Sign as shown if roadway construction area falls within 15' of existing pavement edge. When the construction area falls more than 15' from the existing pavement edge, traffic shall be controlled in accordance with Index No. 601 or 602.

2. Construct shoulder pavement to provide two-lane two-way traffic over shoulder and existing pavement during Phase II roadway construction. For lane width requirements see Index No. 600. Signing as shown, with the near 1500' zone modified in accordance with Index No. 603, to be in place prior to shoulder pavement construction.

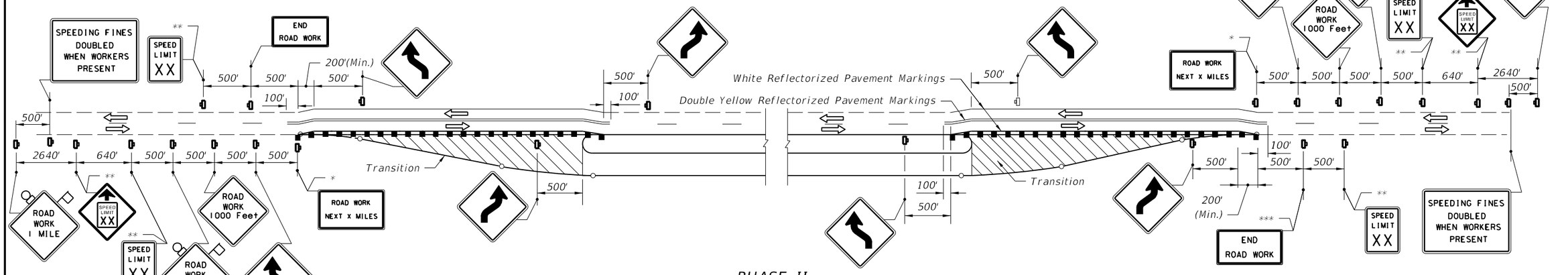

PHASE II

1. Remove existing pavement marking in areas of diversion and remark as shown, install warning devices and resign as shown. Traffic to be controlled in accordance with Index No. 607. For lane width requirements see Index No. 600.

2. Route through traffic to temporary and existing pavement.

3. Construct transitions, excluding friction course.

Note: See Sheet 2 for General Notes.

SYMBOLS

- Sign With 18" x 18" (Min.) Orange Flag And Type B Light
- Channelizing Device (See Index No. 600)
- Work Zone Sign
- Lane Identification + Direction of Traffic

LEGEND

- Phase I Construction
- Phase II Construction
- Phase III Construction

* Required For Projects > 2 Miles

** Required Only When Construction Zone Speed Reduced Below Existing Posted Speed Prior To Construction

*** When Other Construction Or Maintenance Operations Occur Within 1 Mile, Sign(s) To Be Omitted And Signing To Be Coordinated In Accordance With Index No. 600.

C:\d\projects\standards\roadway\00600-s\00640-01.dgn
rd960rh
2:09:13 PM
6/28/2012

LAST REVISION	REVISION	DESCRIPTION:		FDOT DESIGN STANDARDS 2013	CONVERTING TWO LANES TO FOUR LANES DIVIDED, RURAL	INDEX NO.	SHEET NO.
07/01/09						640	1

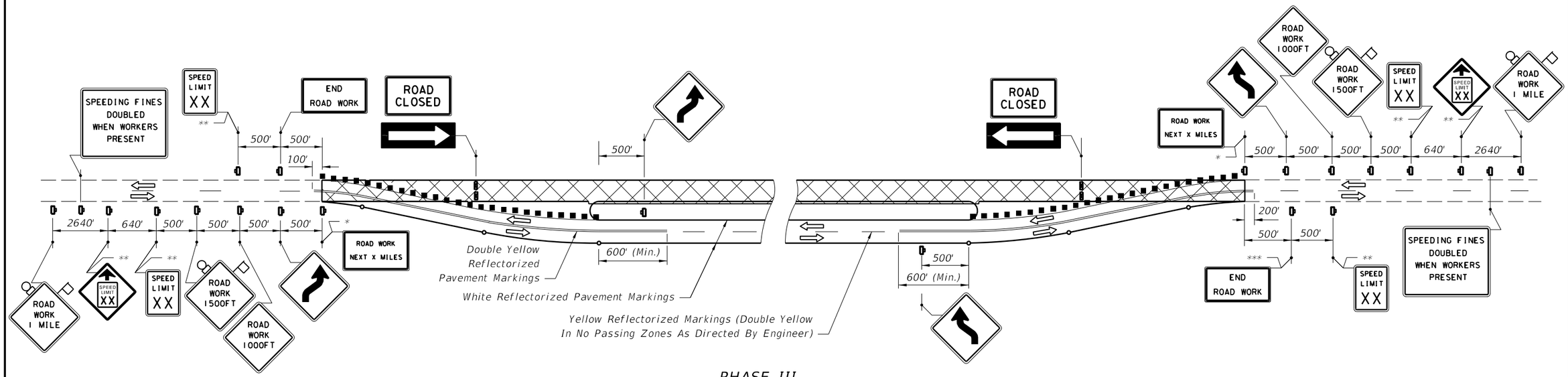

PHASE III

1. Remove temporary marking from the existing pavement and temporary shoulder pavement. Mark pavement, install warning devices and resign as shown. Traffic to be controlled in accordance with Index No. 607. For lane width requirements see Index No. 600.

2. Route through traffic to newly constructed roadway.

3. Resurface or reconstruct existing pavement including required shoulder pavement and friction course.

PHASE IV

1. Reroute through traffic as shown in Phase II. Signing to be as shown in Phase II.

2. Construct friction course over pavement constructed in Phases I and II.

GENERAL NOTES

1. Existing signs and pavement markings that conflict with construction signing and marking shall be obliterated or removed.

2. Lane widths for maintenance of two-way traffic should desirably be equal to lane widths of the existing facility, but lanes shall be not less than 10' in width. When one-lane one-way operations are necessary, a minimum width of 12' shall be maintained and traffic controlled in accordance with Index Nos. 603 and 607. Minimum width for the temporary shoulders is 6'.

3. Within the lateral transitions, the maximum spacing between Type I or Type II barricades or vertical panels or drums shall be based on the speed limit as follows: 15' up to 25 MPH; 30'-40 MPH; 50' for 45 MPH or greater.

   The maximum spacing between warning devices used for delineation between the travel way and construction area is 50' for Type I or Type II barricades or vertical panels or drums.

4. Warning devices shall be in conformance with 'Dropoffs In Work Zones', see Index No. 600.

5. For speed sign applications, see 'Regulatory Speed In Work Zones' Index No. 600.

6. For reflectorized raised pavement marker applications, see 'Pavement Markers' Index No. 600 and Index No. 17352.

7. Additional barricades, signing lighting or other traffic controls shall be provided for limited work areas in accordance with other applicable TCZ Indexes.

8. When a side road intersects the highway within the TTC zone, additional TTC devices shall be placed in accordance with other applicable TCZ Indexes.

9. Provisions approved by the Engineer shall be made for the removal of storm water from the roadway(s) during construction.

10. For general TCZ requirements and additional information, refer to Index No. 600.

* Required For Projects > 2 Miles

** Required Only When Construction Zone Speed Reduced Below Existing Posted Speed Prior To Construction

*** When Other Construction Or Maintenance Operations Occur Within 1 Mile, Sign(s) To Be Omitted And Signing To Be Coordinated In Accordance With Index No. 600.

SYMBOLS

- Sign With 18" x 18" (Min.) Orange Flag And Type B Light
- Channelizing Device (See Index No. 600)
- Type III Barricade
- Work Zone Sign
- Lane Identification + Direction of Traffic

LEGEND

- Phase I Construction
- Phase II Construction
- Phase III Construction

C:\d\projects\standards\roadway\00600-s\00640-02.dgn
rd960rh
2:09:15 PM
6/28/2012

LAST REVISION	REVISION	DESCRIPTION:			INDEX NO.	SHEET NO.
07/01/09			FDOT DESIGN STANDARDS 2013	CONVERTING TWO LANES TO FOUR LANES DIVIDED, RURAL	640	2

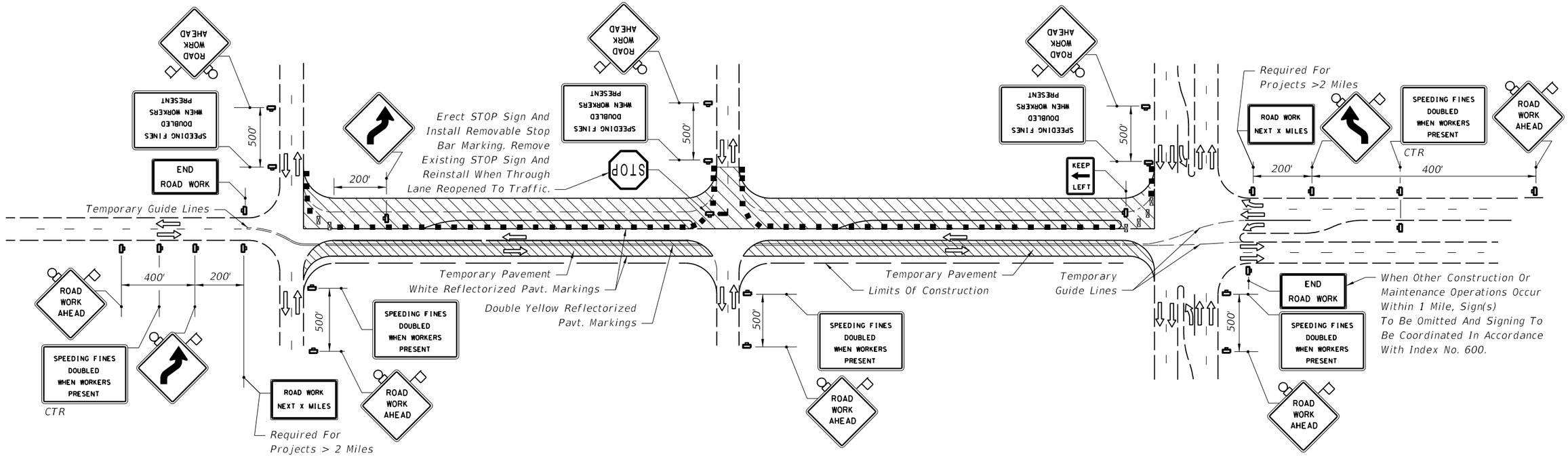

PHASE I

1. Maintain two-lane two-way traffic along existing facility. Install construction signing.
2. Remark existing pavement to facilitate temporary pavement construction. For lane width requirements see Index No. 600.
3. Construct temporary pavement of sufficient width to accommodate two-lane two-way traffic on the temporary pavement and a portion of the existing pavement during Phase I roadway construction. When two-lane two-way traffic can not be maintained during temporary pavement construction one-lane operations shall be maintained in accordance with Index No. 605. Channelizing devices shall be in conformance with 'Drop-Offs in Work Zones' of Index No. 600.
4. Mark the pavement in accordance with the Phase I diagram. Reroute through traffic to the temporary pavement and a portion of the existing pavement. For lane width requirements see Index No. 600.
5. Construct two lanes of the proposed roadway, excluding the friction course. Side street traffic to be maintained. Through and cross traffic to be controlled in accordance with Index Nos. 604, 605 and 615. Barricading shall be in conformance with 'Drop-Offs in Work Zones', Index No. 600. When work extends through an intersection, temporarily reroute the cross traffic to other cross streets. When rerouting is not possible, provide one-lane access (minimum) for two-lane two-way cross streets and one-lane access (minimum) each direction for four-lane two-way cross streets, in accordance with Index Nos. 604, 605 and 615.

SYMBOLS

- Sign With 18" x 18" (Min.) Orange Flag And Type B Light
- Channelizing Device (See Index No. 600)
- Type III Barricade
- Work Zone Sign
- Stop Bar
- Lane Identification + Direction of Traffic

LEGEND

- Phase I Construction
- Phase II Construction
- Phase III Construction

See Sheet 3 for General Notes.

C:\d\projects\standards\roadway\00600-s\00641-01.dgn rd960rh 2:09:17 PM 6/28/2012

LAST REVISION	REVISION	DESCRIPTION:		FDOT DESIGN STANDARDS 2013	CONVERTING TWO LANES TO FOUR LANES DIVIDED, URBAN	INDEX NO.	SHEET NO.
07/01/09						641	1

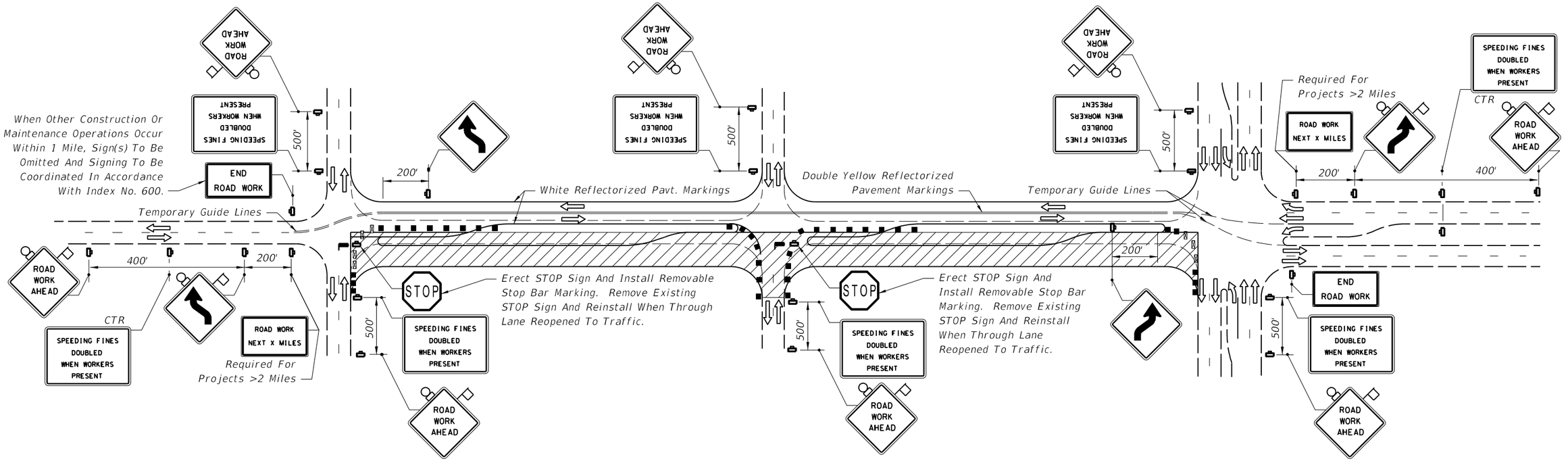

PHASE II

1. Sign and mark Phase I pavement in accordance with the Phase II diagram. For lane width requirements see Index No. 600.
2. Reroute through traffic to Phase I pavement.
3. Complete all Phase II construction, including the friction course. Side street traffic to be maintained. Through and cross traffic to be controlled in accordance with Index Nos. 604, 605 and 615. Channelizing devices shall be in conformance with 'Drop-Offs in Work Zones' of Index No. 600. When work extends through an intersection, temporarily reroute cross traffic to other cross streets. When rerouting is not possible, provide one-lane access (minimum) for two-lane two-way cross streets and one-lane access (minimum) each direction for four-lane two-way cross streets, in accordance with Index Nos. 604, 605 and 615.

SYMBOLS

- Sign With 18" x 18" (Min.) Orange Flag And Type B Light
- Channelizing Device (See Index No. 600)
- Type III Barricade
- Work Zone Sign
- Stop Bar
- Lane Identification + Direction of Traffic

See Sheet 3 for General Notes.

LEGEND

- Phase I Construction
- Phase II Construction
- Phase III Construction

C:\d\projects\standards\roadway\00600-s\00641-02.dgn
rd960rh
2:09:19 PM
6/28/2012

LAST REVISION	REVISION	DESCRIPTION:				
07/01/09			FDOT DESIGN STANDARDS 2013	CONVERTING TWO LANES TO FOUR LANES DIVIDED, URBAN	INDEX NO. 641	SHEET NO. 2

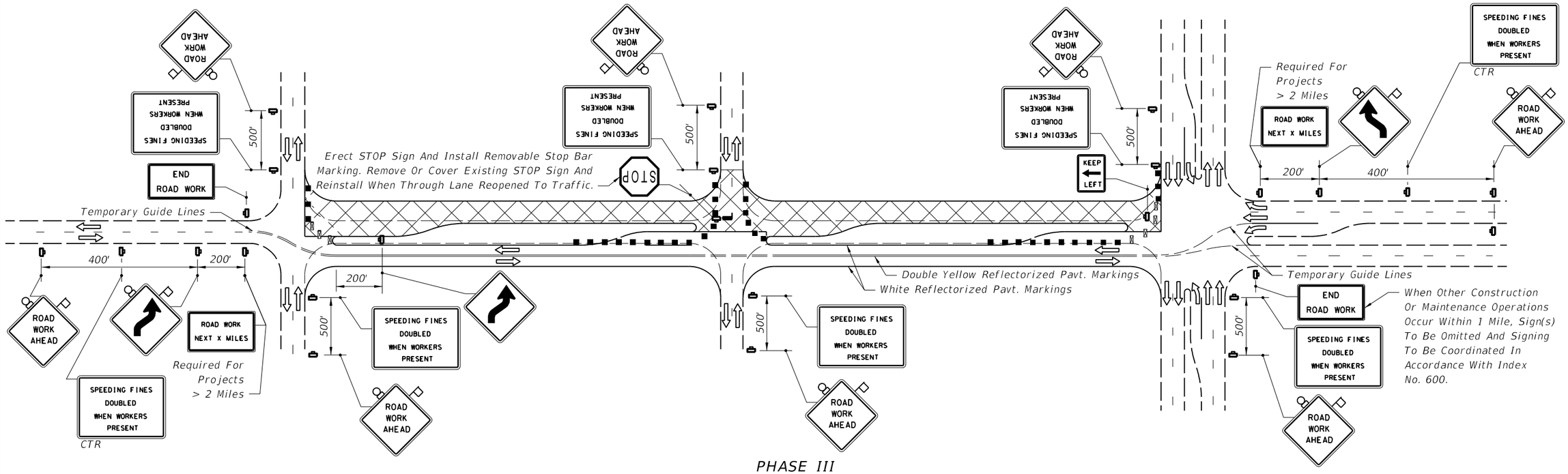

PHASE III

1. Sign and mark Phase II pavement in accordance with the Phase III diagram.
2. Reroute through traffic to Phase II pavement.
3. Construct friction course over Phase I pavement. Side street traffic to be maintained. Through and cross traffic to be controlled in accordance with Index Nos. 604, 605 or 615. When work extends through an intersection, temporarily reroute cross traffic to other cross streets. When rerouting is not possible, provide one-lane access (minimum) for two-lane two-way cross streets and one-lane across (minimum) each direction for four-lane two-way cross streets.

GENERAL NOTES

1. All signing, pavement marking, barricades and warning lights necessary for maintenance of traffic shall conform to Index No. 600.
2. Lane widths for maintenance of two-way traffic should desirably be equal to lane widths of the existing facility, but lanes shall not be less than 10' in width. When one-lane one-way operations are necessary, a minimum width of 12' should be maintained and traffic controlled in accordance with Index Nos. 604, 605 or 615.
3. At signalized intersections, signals shall be directed or relocated as required to the center of relocated lanes.
4. For reflectorized raised pavement marker application, see Index Nos. 600 and 17352.
5. Additional barricades, signing, lighting or other traffic controls for limited work areas shall be provided in accordance with other applicable TCZ Indexes as conditions warrant in each phase.
6. Provisions approved by the Engineer shall be made for the removal of storm water from the roadway(s) during construction.
7. For general TCZ requirements and additional information, refer to Index No. 600.

SYMBOLS

- Sign With 18" x 18" (Min.) Orange Flag And Type B Light
- Channelizing Device (See Index No. 600)
- Type III Barricade
- Work Zone Sign
- Stop Bar
- Lane Identification + Direction of Traffic

LEGEND

- Phase I Construction
- Phase II Construction
- Phase III Construction

C:\d\projects\standards\roadway\00600-s\00641-03.dgn
rd960rh
2:09:21 PM
6/28/2012

LAST REVISION	REVISION	DESCRIPTION:				
07/01/09			FDOT DESIGN STANDARDS 2013	CONVERTING TWO LANES TO FOUR LANES DIVIDED, URBAN	INDEX NO. 641	SHEET NO. 3

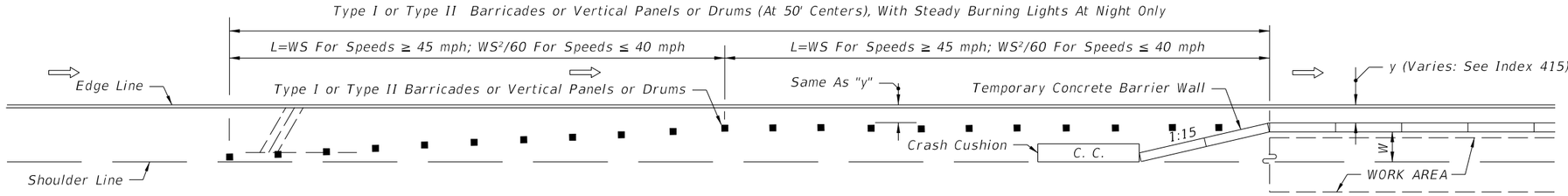

BARRIER AND TRANSITION LOCATED ON PAVED OR UNPAVED SHOULDERS
PLAN SHOWN FOR RIGHT LANE - INVERTED PLAN FOR LEFT LANE

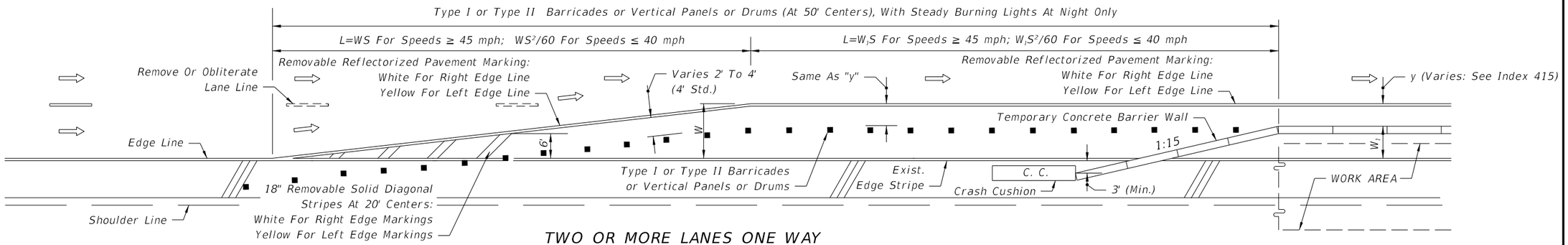

TWO OR MORE LANES ONE WAY
LANE DROP • PLAN SHOWN FOR RIGHT LANE MERGE LEFT - INVERTED PLAN FOR LEFT LANE MERGE RIGHT

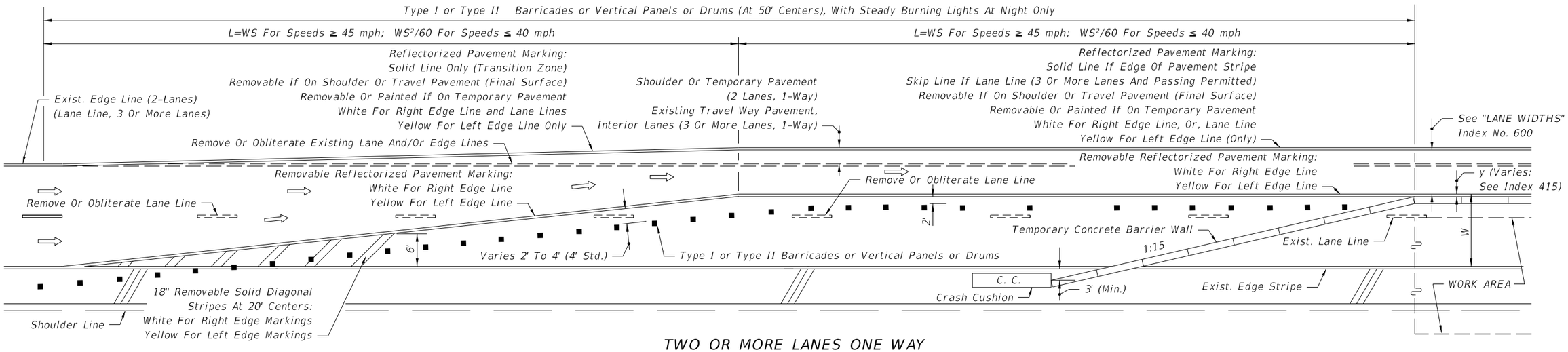

TWO OR MORE LANES ONE WAY
LANE DROP AND LANE SHIFTS - PLAN SHOWN FOR RIGHT LANE MERGE LEFT - INVERTED PLAN FOR LEFT LANE MERGE RIGHT

SYMBOLS

⇨ Lane Identification + Direction of Traffic

■ Channelizing Device (See Index No. 600)

GENERAL NOTES

1. For signing information see the Plans, Specifications, MUTCD and other TCZ Standards.
2. Where W=width of lateral transition in feet, S=posted speed limit.

LAST REVISION	REVISION	DESCRIPTION:			INDEX NO.	SHEET NO.
07/01/12			FDOT DESIGN STANDARDS 2013	TRANSITIONS FOR TEMPORARY CONCRETE BARRIER WALL ON FREEWAY FACILITIES	642	1

C:\d\projects\standards\roadway\00600-s\00642-01.dgn rd960rh 2:09:24 PM 6/28/2012

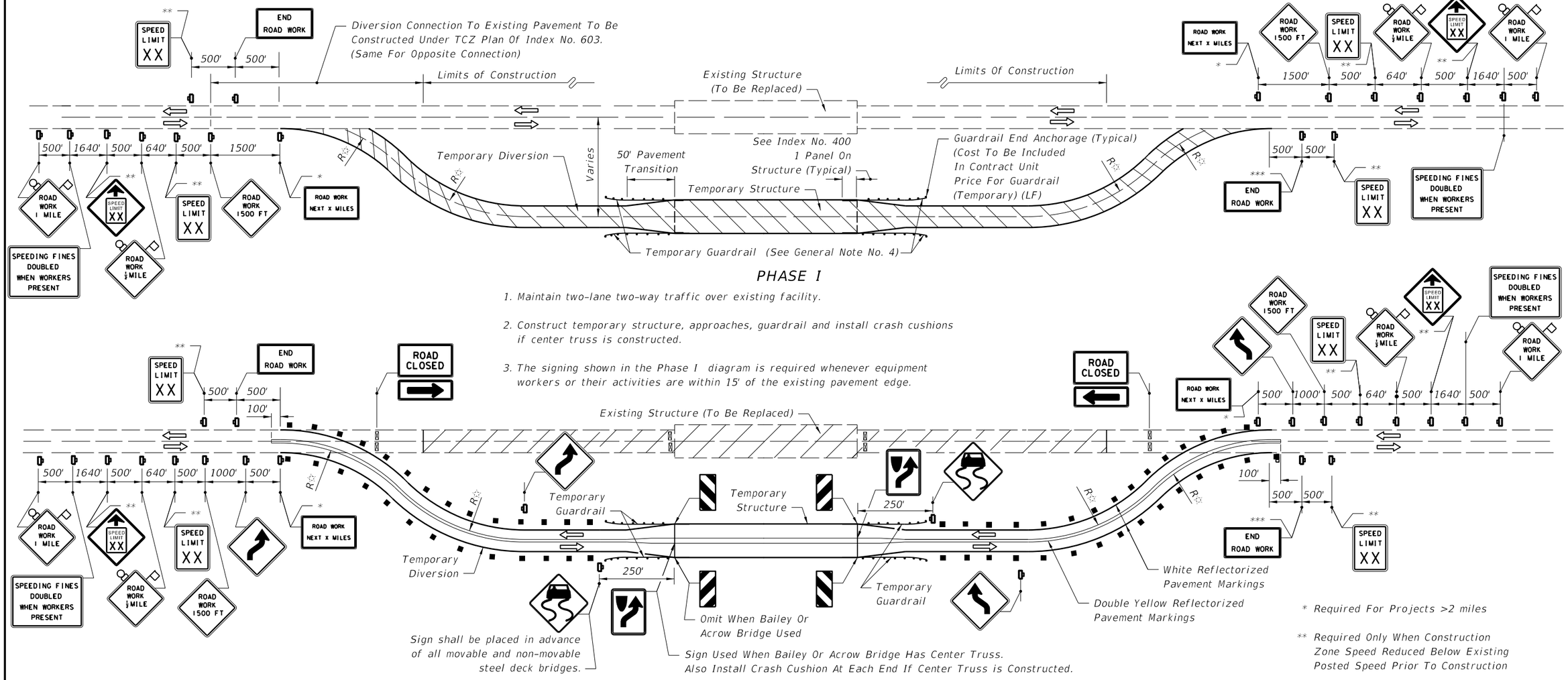

PHASE I

1. Maintain two-lane two-way traffic over existing facility.
2. Construct temporary structure, approaches, guardrail and install crash cushions if center truss is constructed.
3. The signing shown in the Phase I diagram is required whenever equipment workers or their activities are within 15' of the existing pavement edge.

☆ See SUPERELEVATION Index No. 600.

* Required For Projects >2 miles

** Required Only When Construction Zone Speed Reduced Below Existing Posted Speed Prior To Construction

*** When Other Construction Or Maintenance Operations Occur Within 1 Mile, Sign(s) To Be Omitted And Signing To Be Coordinated In Accordance With Index No. 600.

PHASE II

1. Resign and mark as shown in Phase II plan.
2. Reroute traffic to diversion and maintain two-way traffic on diversion. Install Type III barricades.
3. Construct proposed structure and reconstruct or resurface existing approaches.

PHASE III and General Notes (See Sheet 2)

SYMBOLS

- Sign With 18" x 18" (Min.) Orange Flag And Type B Light
- Channelizing Device (See Index No. 600)
- Type III Barricade
- Work Zone Sign
- Lane Identification + Direction of Traffic

LEGEND

- Phase I
- Phase II

C:\d\projects\standards\roadway\00600-s\00650-01.dgn rd960rh 2:09:26 PM 6/28/2012

PHASE III

1. Reroute traffic to final alignment and maintain two-way traffic.

2. Remove all temporary construction items.

GENERAL NOTES

1. All signing, pavement marking, barricades and warning lights necessary for maintenance of traffic shall conform to Index No. 600.

2. For speed sign applications, see Index No. 600.

3. For lane width requirements see Index No. 600. When one-way one-lane operations are necessary, a minimum width of 12' shall be maintained and traffic controlled in accordance with Index Nos. 603, 606 or 607. Minimum width for the diversion shoulders is 6'.

4. Method of attaching temporary guardrail to the diversion structure to be approved by the Engineer. Cost of temporary guardrail systems, including end anchorage assemblies, transitions and attachment to temporary structures, are to be included in the contract unit price for Guardrail (Temporary) LF.

5. Provisions approved by the Engineer shall be made for the removal of storm water from the roadway(s) during construction.

6. Only temporary crash cushions approved by the Department shall be used unless specified devices called for in the plans.

7. Where the temporary structure is not required, the diversion may be constructed in accordance with Index No. 608, unless otherwise stipulated in the plans.

8. For reflective raised pavement marker application, see Index Nos. 600 and 17352.

9. For general TCZ requirements and additional information, refer to Index No. 600.

6/28/2012 2:09:28 PM rd960rh C:\d\projects\standards\roadway\00600-s\00650-02.dgn

BUFFER LENGTH (FEET)		
Construction Zone Speed MPH	X (ft.)	Z (ft.)
60–70	540	550
55	350	430
≤ 50	170	300

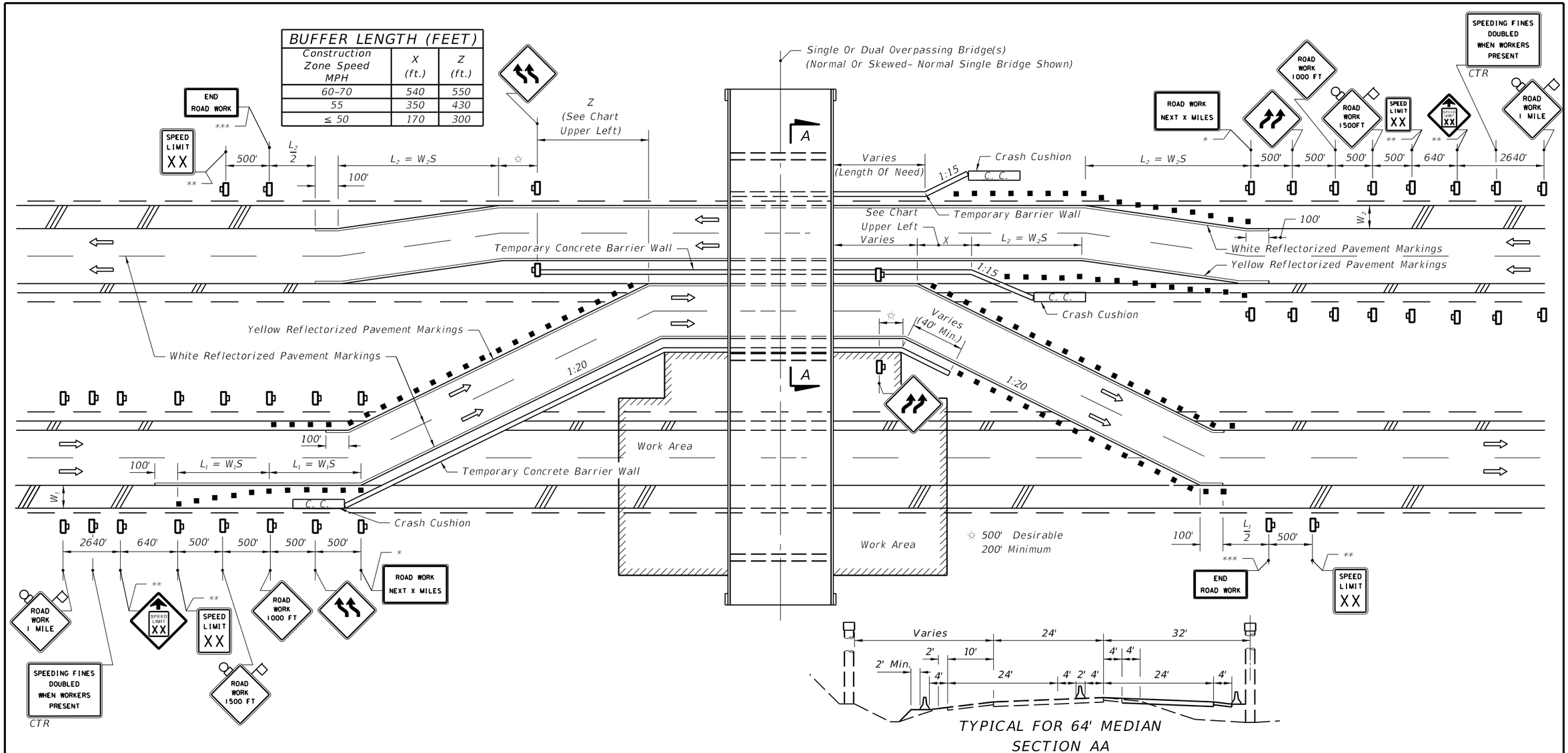

SYMBOLS

- Work Area
- Sign With 18" x 18" (Min.) Orange Flag And Type B Light
- Channelizing Device (See Index No. 600)
- Work Zone Sign
- Lane Identification + Direction of Traffic

GENERAL NOTES

1. S=Posted speed limit (mph).
2. Within the lateral transitions, the maximum spacing between Type I or Type II barricades or vertical panels or drums shall be based on the speed limit as follows: 15' up to 25 MPH; 30' for 30–40 MPH; 50' for 45 MPH or greater. Barricades, vertical panels, and drums shall not be intermixed in lateral transitions.
3. For speed sign applications, see 'Regulatory Speed in Work Zones' Index No. 600.
4. All existing pavement markings within the realignment which conflict with the revised traffic pattern are to be removed and new pavement markings used for marking edge lines and lane lines.
5. When side roads, cross roads or interchanges within the TTC zone, additional TTC devices shall be placed in accordance with other applicable TCZ Indexes
6. For general TCZ requirements and additional information, refer to Index No. 600.

* Required For Projects > 2 miles

** Required Only When Construction Zone Speed Reduced Below Existing Posted Speed Prior To Construction

*** When Other Construction Or Maintenance Operations Occur Within 1 Mile, Sign(s) To Be Omitted And Signing To Be Coordinated In Accordance With Index No. 600.

CONDITIONS

WHERE ANY VEHICLE, EQUIPMENT, WORKERS OR THEIR ACTIVITIES REQUIRE THE CLOSURE OF ONE ROADWAY AND THE OPPOSING ROADWAY IS CONVERTED TO TEMPORARY TWO-WAY TRAVEL BY WAY OF CROSSOVERS.

C:\d\projects\standards\roadway\00600-s\00651-01.dgn
rd960rh
2:09:30 PM
6/28/2012

LAST REVISION	REVISION	DESCRIPTION:			INDEX NO.	SHEET NO.
07/01/12			FDOT DESIGN STANDARDS 2013	MULTILANE DIVIDED, MAINTENANCE AND CONSTRUCTION	651	1

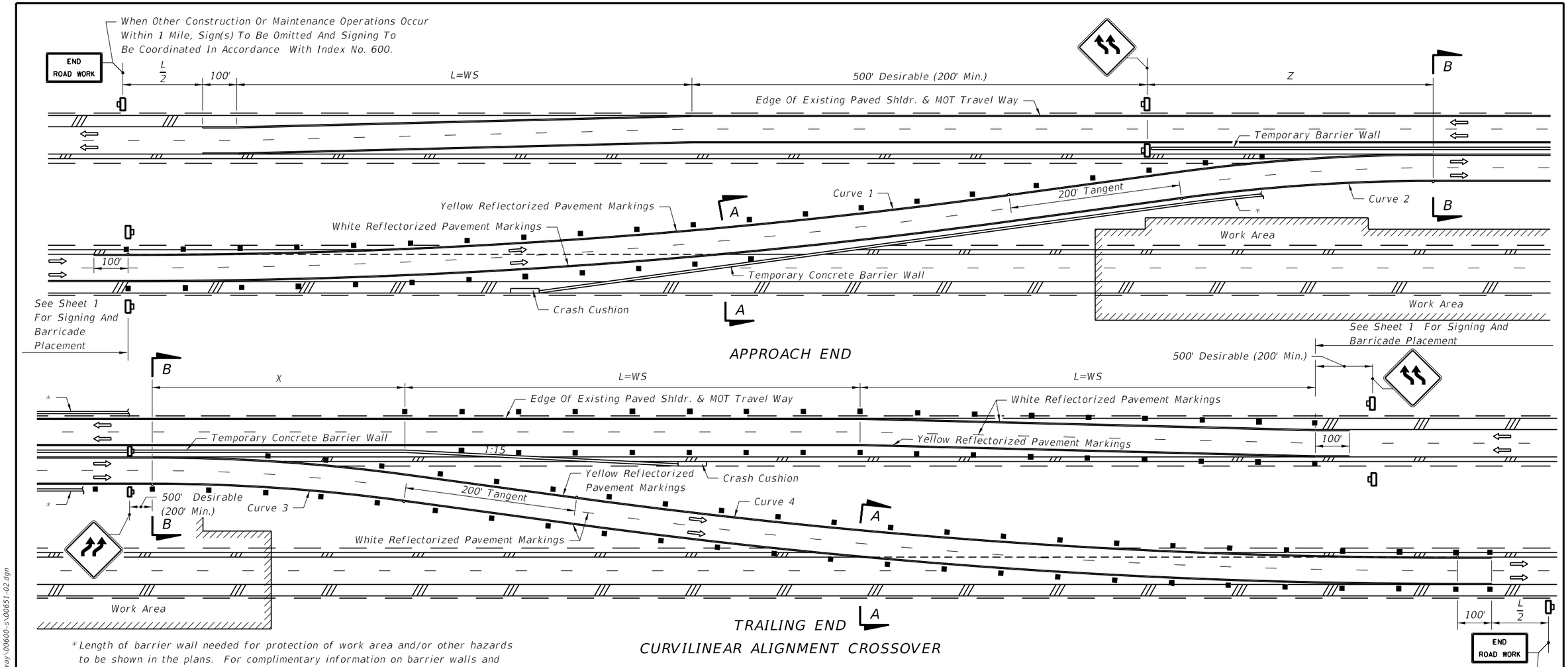

*Length of barrier wall needed for protection of work area and/or other hazards to be shown in the plans. For complimentary information on barrier walls and work area see Sheet 1. See Index No. 600 for clear zone requirements.

BUFFER LENGTH (ft)				
Construction Zone Speed MPH	64' Median		88' Median	
	X	Z	X	Z
70	607	588	582	545
65	581	562	552	514
60	562	543	531	492
55	337	369	330	350
50	201	286	200	276
45	115	164	115	163
40	104	149	104	148
35	91	134	91	132
30	78	118	78	115

MINIMUM RADII FOR NORMAL CROSS SLOPES		
Construction Zone Speed MPH	Minimum Radius (ft) R	
	Curves 1 & 4	Curves 2 & 3
70	22,918 (0° 15')	4,584 (1° 15')
65	22,918 (0° 15')	3,820 (1° 30')
60	22,918 (0° 15')	3,274 (1° 45')
55	11,459 (0° 30')	2,546 (2° 15')
50	11,459 (0° 30')	2,292 (2° 30')
45	1,080 (5° 18')	700 (8° 11')
40	830 (6° 54')	550 (10° 25')
35	620 (9° 14')	410 (13° 58')
30	450 (12° 44')	285 (20° 06')

NOTE: Diversions with speeds of 50 mph or greater are considered high speed facilities; curvature and superelevation criteria for open highway conditions apply.

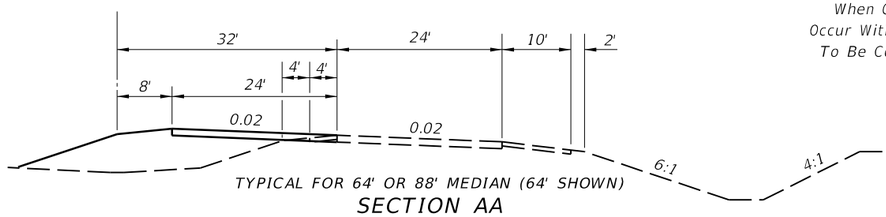

TYPICAL FOR 64' OR 88' MEDIAN (64' SHOWN)

SECTION AA

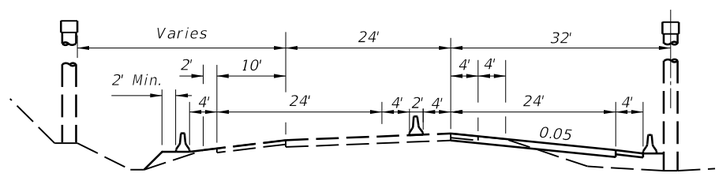

TYPICAL FOR 64' OR 88' MEDIAN (64' SHOWN)
(WITH OR WITHOUT OVERPASSING ROADWAY-OVERPASSING SHOWN)

SECTION BB

When Other Construction Or Maintenance Operations Occur Within 1 Mile, Sign(s) To Be Omitted And Signing To Be Coordinated In Accordance With Index No. 600.

C:\d*\projects\standards\roadway\00600-s\00651-02.dgn rd960rh 2:09:33 PM 6/28/2012

LAST REVISION	REVISION	DESCRIPTION:			INDEX NO.	SHEET NO.
07/01/12			FDOT DESIGN STANDARDS 2013	MULTILANE DIVIDED, MAINTENANCE AND CONSTRUCTION	651	2

TRAFFIC PACING GUIDE

Traffic pacing is a traffic control technique to slow but not stop traffic to facilitate short duration work operations without an elaborate and difficult detour or diversion. Traffic Control Officers pace or slow the traffic to a speed that provides approximately 20–30 minutes to perform the overhead construction. The Department has frequently used this technique for setting bridge beams, overhead sign structures and replacing overhead sign panels.

The traffic pacing begins with approval of the exact date of the activity that shall be made two weeks in advance. The District Public Information Office, the District Traffic Operations Engineer, Local Emergency Management Agencies and Project Personnel shall be notified of the location, date and time. Advance notification to the public shall begin at least one week in advance by using Changeable Message Signs.

The day of the traffic pacing operation, the Changeable Message Sign messages shall be revised to indicate the activity will occur that night or day. The traffic pacing operation begins with a Traffic Control Officer Supervisor at the work site initiating the pacing operation in accordance with pacing details shown on sheet 2. The intent is to keep traffic moving unless there is an emergency.

CHANGEABLE MESSAGE SIGNS
(Typical Placement and Messages)

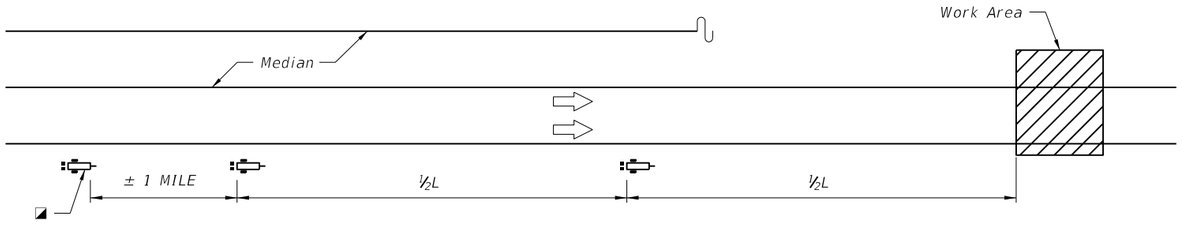

L = Length of Traffic Pacing Operation

Symbols

- ■ *Channelizing Device (See Index No. 600)*
- *Marked Police Vehicle with Flashing Blue Lights*
- *PCMS, Portable Changeable Message Sign*
- ◪ *To be placed the day of pacing operation*
- ⇨ *Lane Identification and Direction of Traffic*

CHANGEABLE MESSAGE SIGN MESSAGE
(MAINLINE AND RAMPS)

ONE WEEK PRIOR TO PACING OPERATION	*EXPECT DELAYS ON*	*MMM DD–DD X AM – X AM*
DURING DAY OF PACING OPERATION	*ROAD WORK TONIGHT*	*EXPECT PERIODIC DELAYS*
DURING PACING OPERATION	*SLOW TRAFFIC AHEAD*	*BE PREPARED TO STOP*

NOTICE

This Index applies to Limited Access Facilities.

This Index represents the minimum requirements for traffic pacing operations on the State Highway System.

A site specific traffic control plan shall be developed for each pacing operation.

TRAFFIC PACING GENERAL NOTES

1. *Install ROAD CLOSED (W20–3) signs approximately 1000' prior to the work area. These signs shall remain covered until the pacing operation begins and covered when the pacing operation has ended.*
2. *Prior to requesting that the traffic control officer supervisor initiate the pacing operation, the contractor shall ensure that the necessary equipment is properly positioned (off the roadway) for the construction activity requiring the traffic pacing operation.*
3. *Truck mounted attenuator(s) with changeable message sign(s) are required to protect workers and/or equipment positioned in a travel lane(s) at the work area during the pacing operation from an errant vehicle. If no workers and/or equipment are positioned in a travel lane(s) at the work area, truck mounted attenuator(s) are not required.*
4. *A traffic control officer supervisor shall be stationed at the work area continuously throughout the pacing operation to insure radio communications between the contractor and/or the project administrator, and all the police vehicles involved in the pacing operation.*
5. *When more than one pacing operation is required in one work period the contractor shall allow sufficient time between pacing operations to permit traffic to return to normal speeds and flow. Additional time may be required between pacing operations to allow traffic to resume normal speeds and flow upstream of the work area as determined by the project administrator or traffic control officer supervisor.*

TRAFFIC CONTROL PLANS OR TECHNICAL SPECIFICATION

1. *The specific activities and locations, along with allowable times of day and days of the week, when pacing will be allowed should be clearly detailed in the traffic control plans or technical specification. If there are specific holiday or special event dates that, due to anticipated traffic congestion, pacing operations should not be allowed, these dates should also be spelled out in plans or specifications. When detailing the specific activities and locations of pacing activities, identify the minimum number of traffic control officers needed for each function and location of the pacing operation. If there are certain work activities that need to be completed prior to the contractor starting the work anticipated during the pacing operation, the activities should be clearly detailed in the plans or technical specification.*
2. *When developing a pacing plan, failsafe "stop points" should be identified for those work operations in which a construction problem could create a condition that could not be immediately cleared. A failsafe stop point is the last safe egress from the highway facility prior to traffic coming upon the work that is being completed during the operation. In the unlikely event that the work is not completed during the time estimated for the pacing, the plans or specification should direct the pacing to not proceed past the failsafe stop point until the highway is cleared. In the event of major construction problem that cannot be immediately cleared, traffic can then be diverted off the facility.*
3. *The traffic control plans or technical specification should require the contractor to submit a pacing plan in advance of the operation. The pacing plan should outline the contractors expected equipment and personnel, outline the operation, and include a contingency plan should any of the contractor's critical equipment break down. If the project includes a damage recovery clause, the traffic control plan or technical specification should be clear that the damage recovery applies to the pacing operation as well.*
4. *Changeable message signs shall be displayed one week prior to work using messages described in the traffic pacing plan. The number and location of changeable message signs shall be called out in the traffic control plans.*

C:\d\projects\standards\roadway\00600-s\00655-01.dgn
rd960rh
2:09:35 PM
6/28/2012

MAINLINE PACING DETAILS
(1 DIRECTION OF FOUR LANE ROADWAY EXAMPLE)

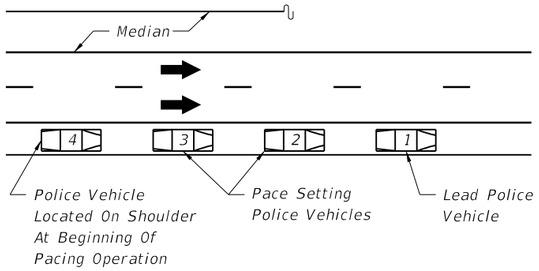

STAGE ONE

1. Four police vehicles located upstream of the work area at the beginning location of the traffic pacing operation with flashing blue lights off.

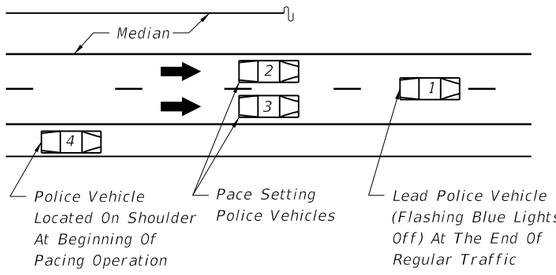

STAGE TWO

1. Once the police vehicles are in place and the traffic control officer supervisor at the work area notifies all officers to begin the traffic pacing operation, the last three police vehicles shall turn on their flashing blue lights. The first three police vehicles shall enter the travel lanes with the second and third police vehicles immediately forming a side by side "pacing operation" of all lanes behind the lead police vehicle (flashing blue lights off).

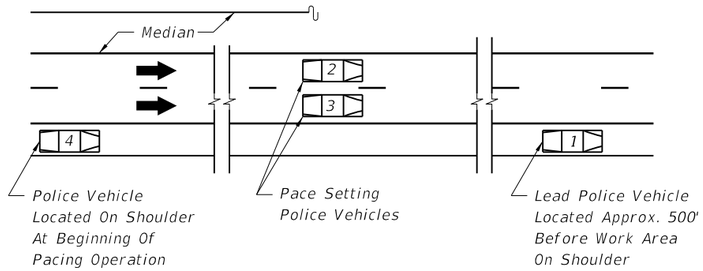

STAGE THREE

1. The two pace setting police vehicles shall begin to slow to the pacing speed (20 mph is preferred, 10 mph minimum), for the duration of the traffic pacing operation.

2. The lead police vehicle (flashing blue lights off) shall match the speed of the last vehicles ahead of the pacing vehicles and continue following traffic until a point approximately 500' in advance of the work area. The lead police vehicle shall then come to a complete stop on the right shoulder and turn on its flashing blue lights. If required, crash truck(s) with rear mounted impact attenuator(s) and changeable message sign(s) shall move into the travel lanes approximately 200 ft. upstream of the work area with the impact attenuators down and operating once traffic has cleared the work area.

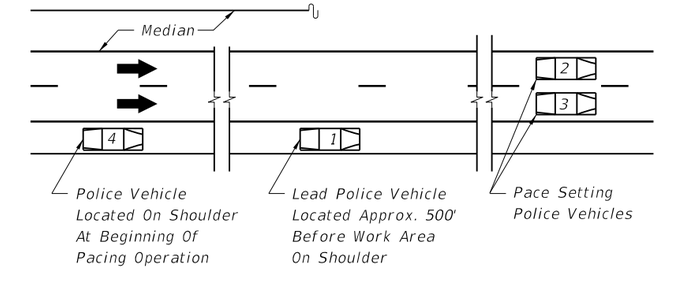

STAGE FOUR

1. When the pace setting police vehicles are within approximately two miles of the work area they shall notify the onsite traffic control officer supervisor who will immediately inform the contractors on site supervisor of their location. Once the contractors on site supervisor has been notified of the pacing vehicles location, the contractor shall begin to clear the travel lanes of all equipment and debris in order to reopen all travel lanes.

2. In case of emergency the pace setting police vehicles shall come to a complete stop once they reach the lead police vehicle. If no emergency is encountered, the crash truck(s) shall be moved from the travel lanes and the two pace setting police vehicles shall clear the work area and immediately move to the right shoulder or an area designated by the traffic control officer supervisor and turn off the flashing blue lights. Once the two pace setting police vehicles pass the work area, the traffic control officer supervisor shall instruct the lead and last police vehicles to turn off their flashing blue lights.

RAMP PACING DETAILS

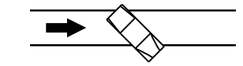

ONE LANE RAMP

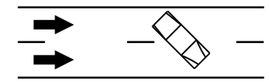

TWO LANE RAMP

RAMP CLOSURE DETAIL

1. Once notified by the on site traffic control officer supervisor to begin the traffic pacing operation each police vehicle at the indicated ramp shall turn their flashing blue lights on and position the vehicle across the ramp lane(s) to close ramp access.

2. Once the pacing operation passes the closed on ramp the police vehicle on the ramp shall turn off the flashing blue lights and move from the ramp lane(s) to allow traffic to enter the mainline pacing operation.

GENERAL NOTES

1. Each Traffic Control Officer shall have a marked vehicle with flashing blue lights, for the pacing operation. The location and number of officers at each location will be as follows:

No. Of Traffic Control Officers With Vehicles	Function	Location
1 min.	Supervisor	Work Area
1 Lead Vehicle	Varies	Mobile operation
1 for each travel lane	Pacing Operation	Mobile operation beginning x miles upstream and terminating at the work area
1 Stationed at the Beginning of Pacing Operation	Advanced Warning to Motorist	Stationed at the Beginning of Pacing Operation
1 for each entrance ramp	Entrance Ramp Roadblocks	One at each of the entrance ramps upstream of the work area

C:\d\projects\standards\roadway\00600-s\00655-02.dgn
rd960rh
2:09:37 PM
6/28/2012

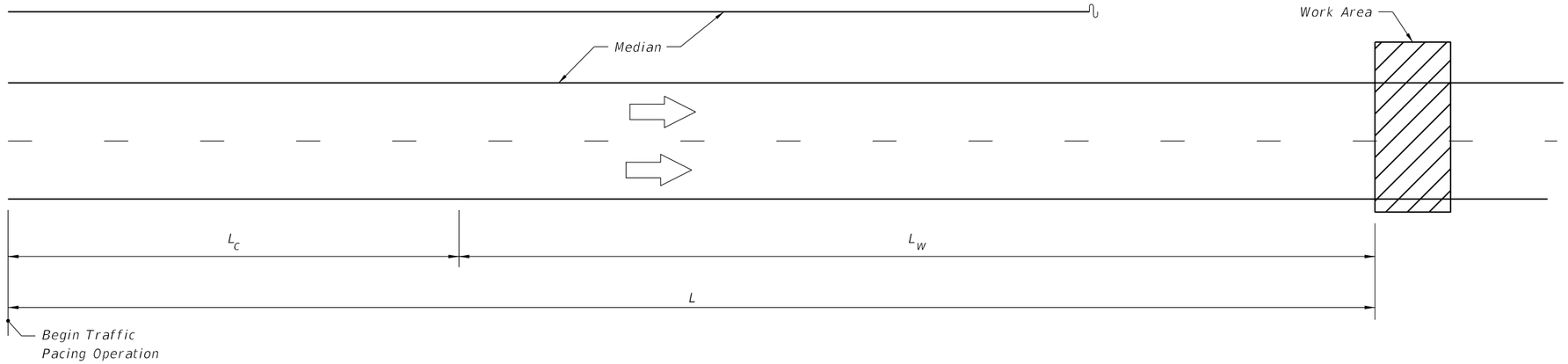

DESIGN CONSIDERATIONS:

The design shall evaluate the actual distance required for the pacing operation based on site specific features such as: roadway geometrics, pacing speeds, regulatory speeds, interchange spacing, work duration, availability of traffic control officers, traffic volumes and maximum queue length.

The starting point of a traffic pacing operation must consider the following factors: the speed of the pacing vehicles, the location of entrance ramps, horizontal and vertical alignment of the facility.

In some instances, it may be necessary to close a lane at the work site to position a crane(s) and the materials to be lifted.

All material to be installed shall be on-site before the traffic pacing operation begins.

It may be necessary to install temporary barrier walls to protect pre-positioned and assembled materials in the right of way.

The minimum speed allowed for a pacing operation is 10 mph with 20 mph the preferred speed.

The maximum allowed work duration is ½ hour (30 min).

The maximum practical pacing operation length is 10 miles.

S_r = Regulatory speed (mph)

S_p = Pacing speed (mph)

t_w = Work duration (min)

L = Total pacing distance in miles

$$L = \frac{t_w}{60} S_p \left(\frac{S_p}{S_r - S_p} + 1 \right)$$

$$L = L_c + L_w$$

L_c = distance paced vehicles must travel before the vehicles at regulatory speed have cleared the work zone

$$L_c = \left(\frac{\frac{t_w}{60} \times S_p^2}{S_r - S_p} \right)$$

L_w = distance paced vehicles travel while work is performed

$$L_w = \left(\frac{t_w}{60} \times S_p \right)$$

F_{HV} = Heavy Vehicle Factor

$$F_{HV} = 1 + \left(\frac{P_t}{100} \times 0.5 \right)$$

P_t = % Trucks

TRAFFIC PACING DISTANCES (L) miles

S_p=20; pcphpl ≤ 1,750

S_r	t_w (min)					
	5	10	15	20	25	30
70	2.3	4.7	7.0	9.3	*	*
65	2.4	4.8	7.2	9.6	*	*
60	2.5	5.0	7.5	10.0	*	*
55	2.6	5.2	7.9	*	*	*
50	2.8	5.6	8.3	*	*	*

* Site Specific design required.

NOTES FOR TABLE:

t_w is the total time allowed for work activity in minutes. This time starts just after the last vehicle traveling at the pre-pacing regulatory speed clears the work area and ends just as the pacing operation reaches the work area. t_w must include the time required to clear the roadway of equipment, materials, and personnel.

Demand volume may not exceed 1,750 pcphpl (passenger cars per hour per lane) without a site specific design. Traffic counts can be obtained from the Office of Planning, or you may need to collect traffic counts. Hourly directional traffic volumes must be converted to pcphpl using the following:

$$pcphpl = \left(\frac{\text{Hourly Directional Volume}}{\text{\# Lanes (each direction)}} \right) \times \text{Heavy Vehicle Factor}$$

For additional guidance for site specific designs refer to the Plans Preparation Manual, Volume 1 Chapter 10.

C:\f\projects\standards\roadway\00600-s\00655-03.dgn
rd960rh
2:09:40 PM
6/28/2012

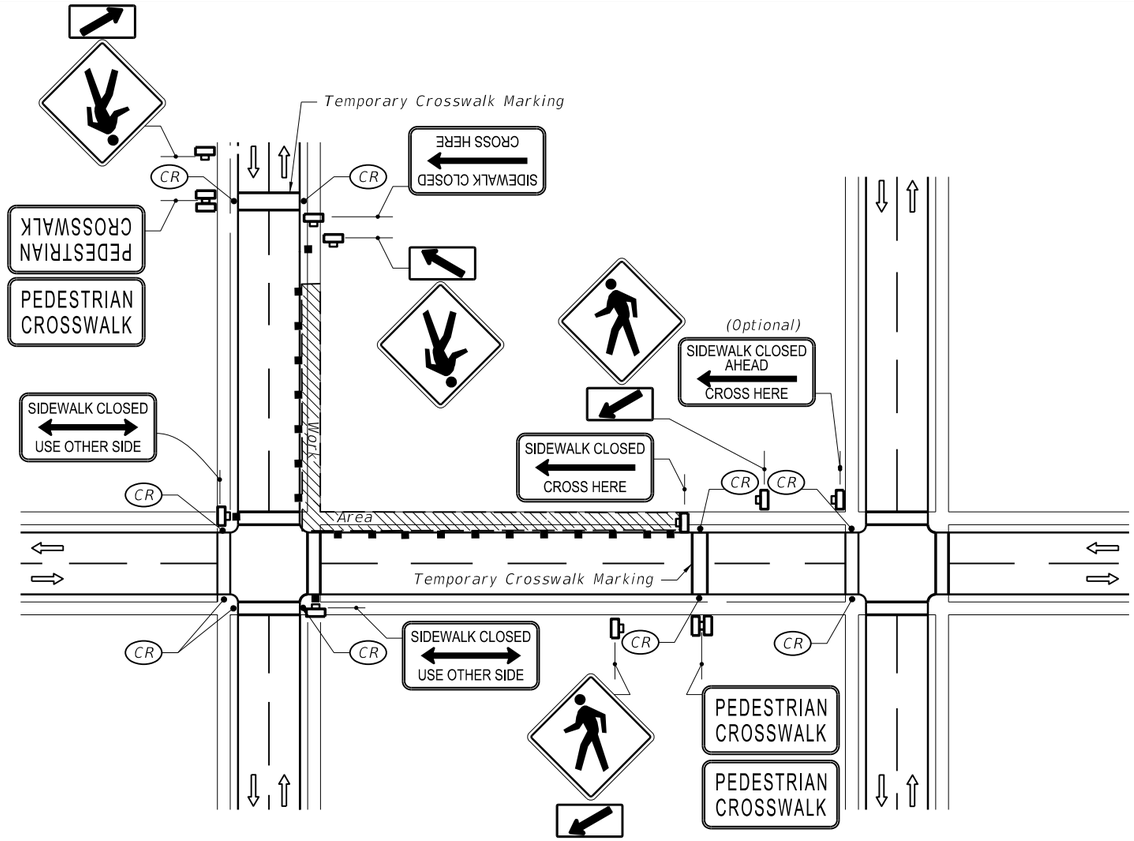

CORNER SIDEWALK CLOSURE WITH TEMPORARY CROSSWALKS

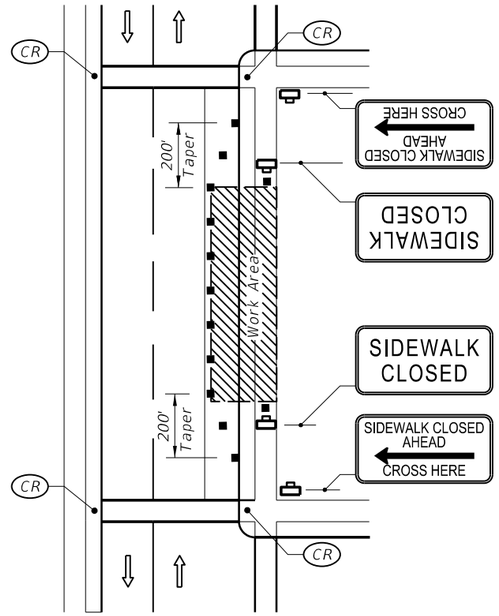

MID-BLOCK SIDEWALK CLOSURE

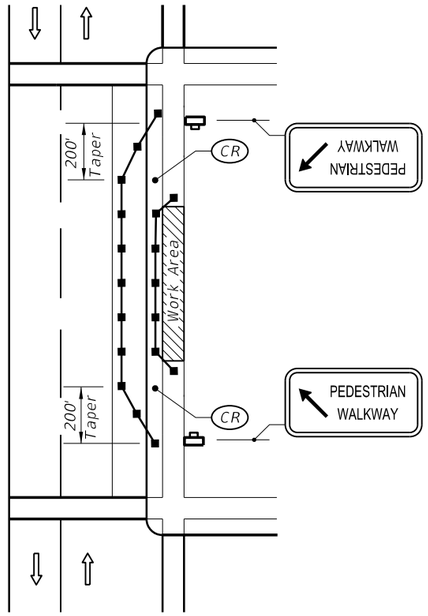

MID-BLOCK SIDEWALK CLOSURE WITH TEMPORARY WALKWAY

SYMBOLS

- Work Area
- Channelizing Device (See Index No. 600)
- Work Zone Sign
- CR — Required Locations For Either Temporary Or Permanent Curb Ramps.
- Lane Identification + Direction of Traffic
- Pedestrian Longitudinal Channelizing Device

GENERAL NOTES

1. Only the signs controlling pedestrian flows are shown. Other work zone signs will be needed to control traffic on the streets.
2. For spacing of traffic control devices and general TCZ requirements refer to Index No. 600. Maximum spacing between barricades, vertical panels, drums or tubular markers shall not be greater than 25'.
3. Street lighting should be considered.
4. For nighttime closures use Type A flashing warning lights on barricades supporting signs and closing sidewalks. Use Type C steady-burn lights on channelizing devices separating the work area from vehicular traffic.
5. Pedestrian traffic signal display controlling closed crosswalks shall be covered or deactivated.
6. Post Mounted Signs located near or adjacent to a sidewalk shall have a 7' minimum clearance from the bottom of sign to the sidewalk.
7. When construction activities involve sidewalks on both sides of the street, efforts should be made to stage the construction so that both sidewalks are not out of service at the same time.
8. In the event that sidewalks on both sides of the street are closed, pedestrians shall be guided around the construction zone.
9. Temporary walkways shall be a minimum of 4' wide with a maximum 0.02 cross slope and a maximum 0.05 running slope between ramps. Temporary walkways less than 5' in width shall provide for a 5' x 5' passing space at intervals not to exceed 200'. Temporary ramps shall meet the requirements for curb ramps specified in Index No. 304. Temporary walkway surfaces and ramps shall be stable, firm, slip resistant, and kept free of any obstructions and hazards such as holes, debris, mud, construction equipment, stored materials, etc.
10. Temporary ramps and temporary crosswalk markings shall be removed with reopening of the sidewalk, unless otherwise noted in the plans. All work and materials associated with constructing temporary curb ramps and temporary crosswalk markings, removal and disposal of temporary curb ramps and temporary crosswalk markings, and restoration to original condition shall be paid for as Maintenance of Traffic, Lump Sum.

CONDITIONS

WHERE ANY VEHICLE, EQUIPMENT WORKERS OR THEIR ACTIVITIES ENCROACH ON THE SIDEWALK FOR A PERIOD OF MORE THAN 60 MINUTES.

C:\d\projects\standards\roadway\00600-s\00660-01.dgn
rd960rh
2:09:42 PM
6/28/2012

LAST REVISION	REVISION	DESCRIPTION:			INDEX NO.	SHEET NO.
07/01/12			FDOT DESIGN STANDARDS 2013	PEDESTRIAN CONTROL FOR CLOSURE OF SIDEWALKS	660	1

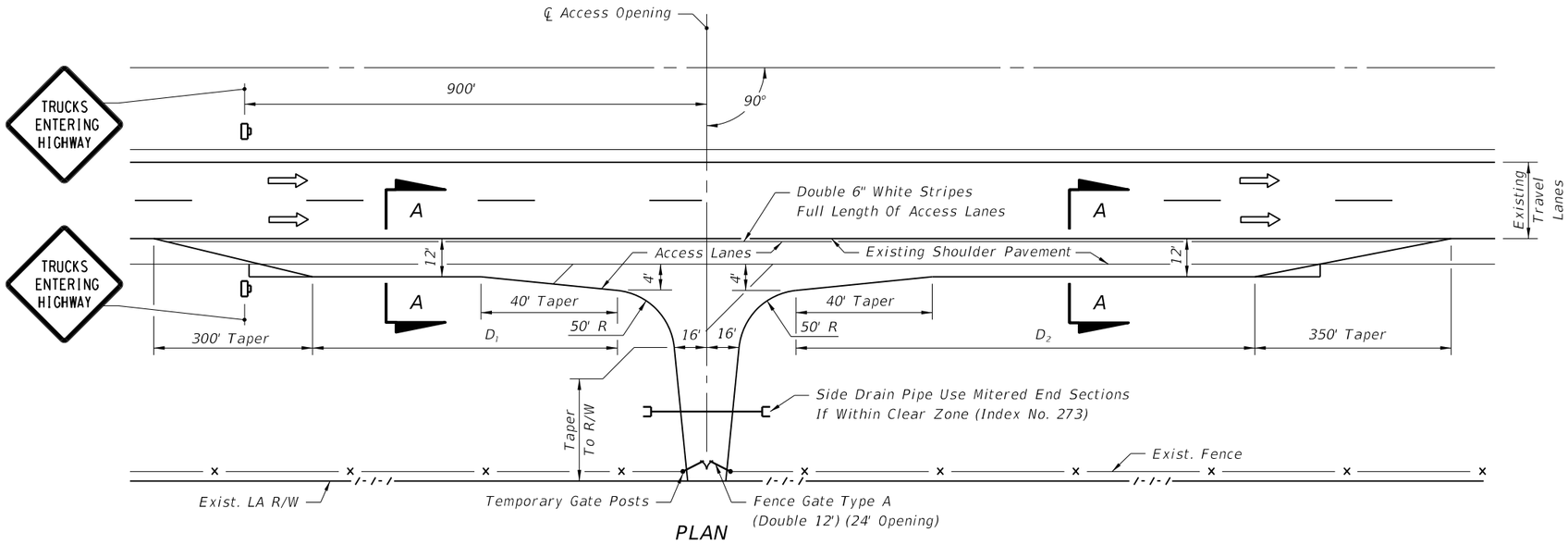

PLAN

LENGTH OF ACCESS LANES (Ft.)		
Grade	D_1	D_2
2% or less	590	1540
3 to 4% Upgrade	530	2310
3 to 4% Downgrade	710	925

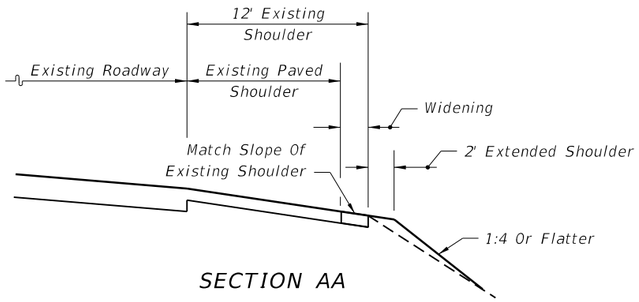

SECTION AA

SYMBOLS

Work Zone Sign

GENERAL NOTES

1. Access openings across limited access right of way and use of this Index are prohibited unless specifically permitted in the Contract Plans or Special Provisions. When permitted in the Contract Plans or Special Provisions and prior to construction of any opening, the Contractor must submit, in writing, a request identifying specific locations for approval by the Engineer.
2. No more than two (2) access openings will be allowed on each project.
3. Access openings shall be located only in areas having adequate sight distance and shall not be located within 1.5 miles of interchanges nor within 2000 ft. of acceleration-deceleration lanes at rest areas, other access openings or other highway service areas.
4. Access openings shall not be constructed directly opposite temporary median crossovers nor within 2000 ft. of temporary median crossovers.
5. Access openings shall be within the project limits and shall not be used for transporting materials to or from any other project. The acceleration-deceleration surfaces shall be paved. RAP material is acceptable for driveway surfacing.
6. Any Motorist Aid Call Boxes affected by the temporary access openings shall be relocated outside the limits of access lanes and remain in use during construction. Upon removal of access lanes, call boxes shall be returned to their previous location. Temporary relocation and restoration of call boxes shall be at the contractor's expense.
7. Access openings in the limited access fence shall have gates which are to be locked during nonwork hours or periods when the access is not in active use.
8. The contractor shall take all precautions necessary to insure against entrance by livestock or unauthorized persons or vehicles.
9. The contractor shall not vary from the plan detail without approval of the Engineer.
10. Gates shall be removed and access opening locations shall be restored to preconstruction condition immediately upon completion of activities utilizing the materials being transported through the openings whether or not the project is completed.
11. Failure to comply with any provision of the access opening plan shall be cause for terminating use of all openings. Upon notification by the Engineer, the contractor shall cease hauling and begin restoration of affected areas. Under this condition expense of removal, restoration and of additional hauling distances shall be borne by the contractor.
12. No guardrail or barrier wall will be removed for access openings.
13. Construction and removal of the access and restoring the area to preconstruction condition shall be included in the cost of Maintenance Of Traffic, LS.

C:\d\projects\standards\roadway\00600-s\00665-01.dgn
rd960rh
2:09:44 PM
6/28/2012

LAST REVISION	REVISION	DESCRIPTION:	FDOT DESIGN STANDARDS 2013	LIMITED ACCESS TEMPORARY OPENING	INDEX NO.	SHEET NO.
07/01/00					665	1

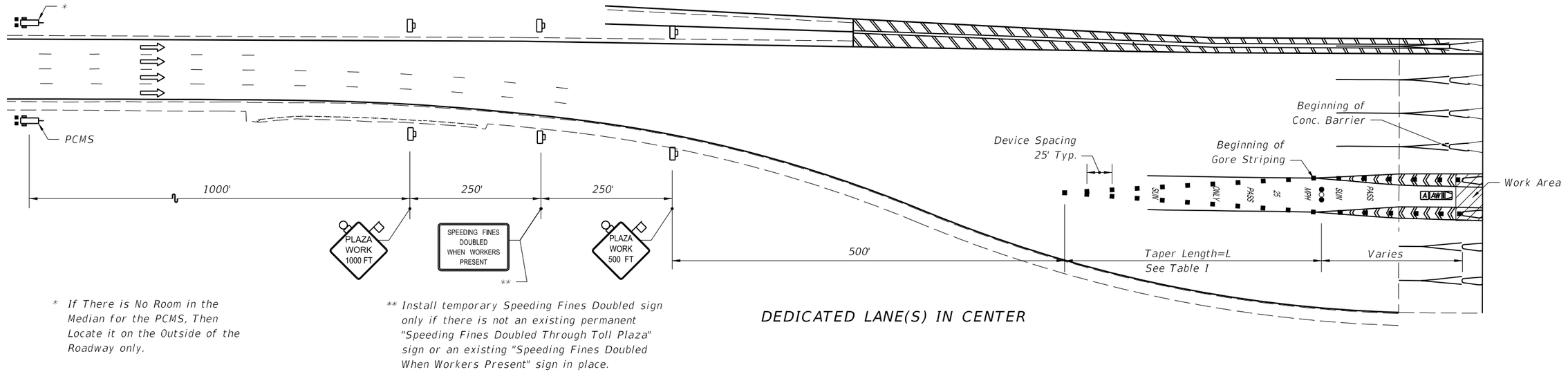

* If There is No Room in the Median for the PCMS, Then Locate it on the Outside of the Roadway only.

** Install temporary Speeding Fines Doubled sign only if there is not an existing permanent "Speeding Fines Doubled Through Toll Plaza" sign or an existing "Speeding Fines Doubled When Workers Present" sign in place.

DEDICATED LANE(S) IN CENTER

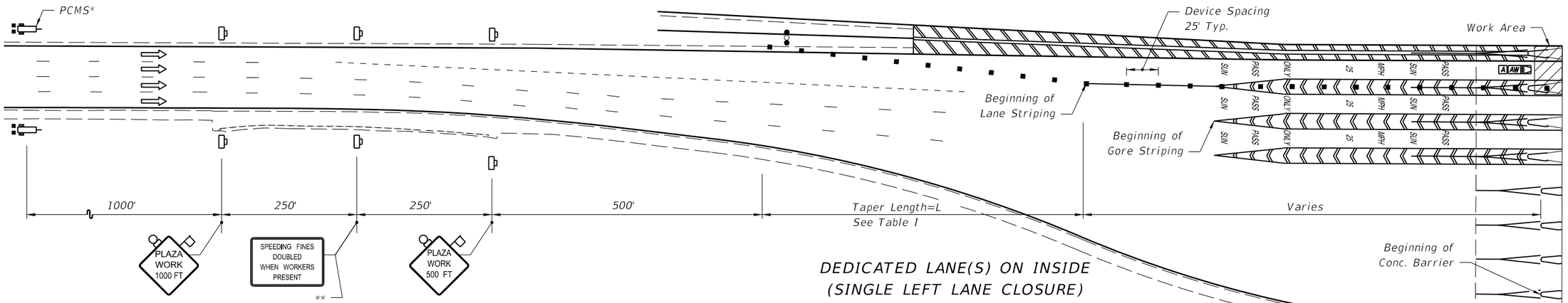

DEDICATED LANE(S) ON INSIDE (SINGLE LEFT LANE CLOSURE)

SYMBOLS

- Work Area
- Sign With 18" x 18" (Min.) Orange Flag And Type B Light
- Channelizing Device (See Index No. 600)
- Work Zone Sign
- Advance Warning Arrow Board
- Lane Identification + Direction of Traffic
- Advance Warning Vehicle Equipped with Advance Warning Arrow Board and Truck/Trailer Mounted Attenuator
- Portable Changeable (Variable) Message Sign

PCMS DISPLAY A

MESSAGE 1: SUNPASS LANE(S) CLOSED — MESSAGE 2: USE CASH LANES

PCMS DISPLAY B

MESSAGE 1: SUNPASS ONLY LANE(S) — MESSAGE 2: CLOSED AT PLAZA

PCMS DISPLAY C

MESSAGE 1: SUNPASS ONLY LANE(S) — MESSAGE 2: KEEP LEFT/RIGHT

Table I - Taper Length (L)

Dedicated Lane Location	Number of Dedicated Lanes	Number of Dedicated Lanes Closed	Taper Length (Feet)	PCMS Display
Center	1	1	200	A
	2	1	200	B
		2	350	A
	3	1	350	B
		2	350	B
		3	350	A
Inside***	1	1	350	A
	2	1	350	C
	3	1	350	C

*** See Index 667 Sheet 2 for Right or Center Inside Dedicated Lane Closed, or Two or More Inside Dedicated Lanes Closed Configurations.

GENERAL NOTES

1. This Plan is to be used at Mainline Plazas Only.
2. This Plan is for Lane Closures that exceed three hours.
3. Plaza canopies which have existing DMS signs on the canopies shall display the message "LANE CLOSED" for the duration of this closure.
4. A truck/trailer mounted attenuator is required.
5. Lane use control lights, signs, or signals over toll lanes shall be switched to the appropriate symbol, message, or correct color prior to the start of any lane closure. They should also be switched at project completion.
6. At least 48 hours prior to any closure, other than emergencies, the plaza manager shall be notified for security and staffing.

DEDICATED LANES

C:\d\projects\standards\roadway\00600-s\00667-01.dgn rd960rh 2:09:46 PM 6/28/2012

LAST REVISION	REVISION	DESCRIPTION:			INDEX NO.	SHEET NO.
07/01/09			FDOT DESIGN STANDARDS 2013	TOLL PLAZA TRAFFIC CONTROL STANDARDS	667	1

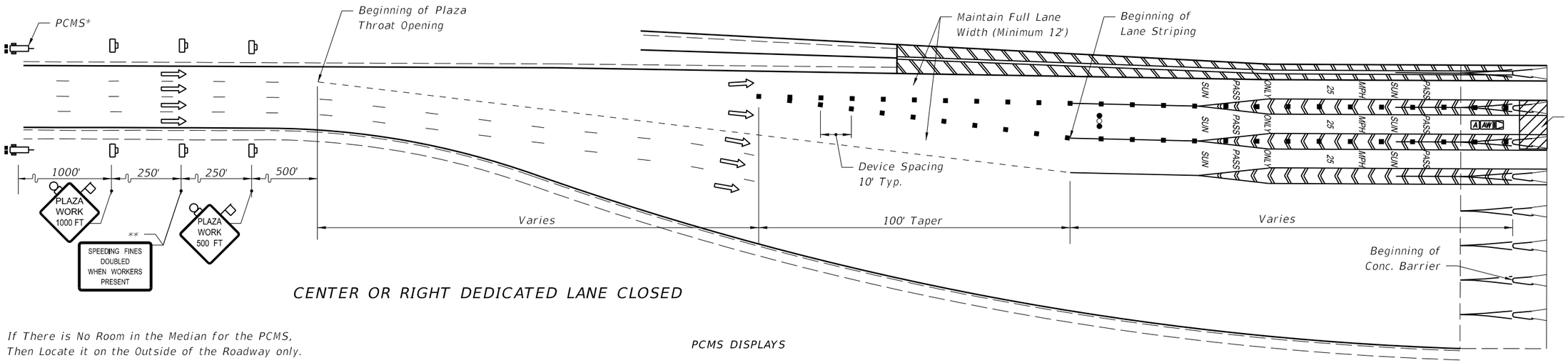

CENTER OR RIGHT DEDICATED LANE CLOSED

* *If There is No Room in the Median for the PCMS, Then Locate it on the Outside of the Roadway only.*

** *Install temporary Speeding Fines Doubled sign only if there is not an existing permanent "Speeding Fines Doubled Through Toll Plaza" sign or an existing "Speeding Fines Doubled When Workers Present" sign in place.*

PCMS DISPLAYS

MESSAGE 1: CENTER SUNPASS LANE	MESSAGE 2: CLOSED AT PLAZA	MESSAGE 1: SUNPASS ONLY LANE(S)	MESSAGE 2: KEEP LEFT

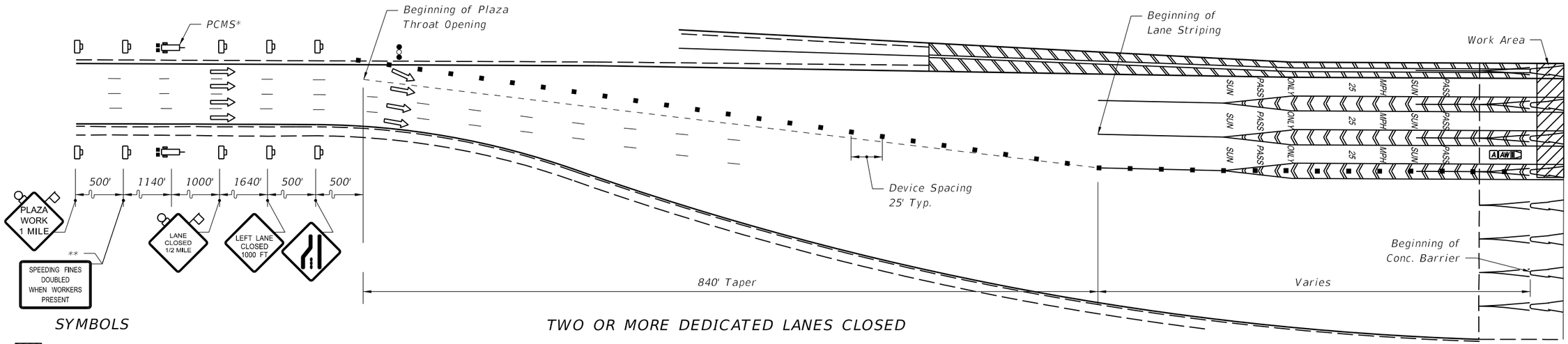

TWO OR MORE DEDICATED LANES CLOSED

SYMBOLS

- Work Area
- Sign With 18" x 18" (Min.) Orange Flag And Type B Light
- Channelizing Device (See Index No. 600)
- Work Zone Sign
- Advance Warning Arrow Board
- Lane Identification + Direction of Traffic
- Advance Warning Vehicle Equipped with Advance Warning Arrow Board and Truck/Trailer Mounted Attenuator
- Portable Changeable (Variable) Message Sign

PCMS DISPLAY

MESSAGE 1: SUNPASS LANES CLOSED	MESSAGE 2: USE CASH LANES

GENERAL NOTES

1. *This Plan is to be used at Mainline Plazas Only.*
2. *This Plan is for Lane Closures that exceed three hours.*
3. *Plaza canopies which have existing DMS signs on the canopies shall display the message "LANE CLOSED" for the duration of this closure.*
4. *A truck/trailer mounted attenuator is required.*
5. *See INDEX 667 sheet 1 for Two or More Inside Dedicated Lanes Single Left Lane Closed Configuration.*
6. *Lane use control lights, signs, or signals over toll lanes shall be switched to the appropriate symbol, message, or correct color prior to the start of any lane closure. They should also be switched at project completion.*
7. *At least 48 hours prior to any closure, other than emergencies, the plaza manager shall be notified for security and staffing.*

INSIDE DEDICATED LANES

C:\d\projects\standards\roadway\00600-s\00667-02.dgn
rd960rh
2:09:48 PM
6/28/2012

LAST REVISION	REVISION	DESCRIPTION:				
07/01/09			FDOT DESIGN STANDARDS 2013	TOLL PLAZA TRAFFIC CONTROL STANDARDS	INDEX NO. 667	SHEET NO. 2

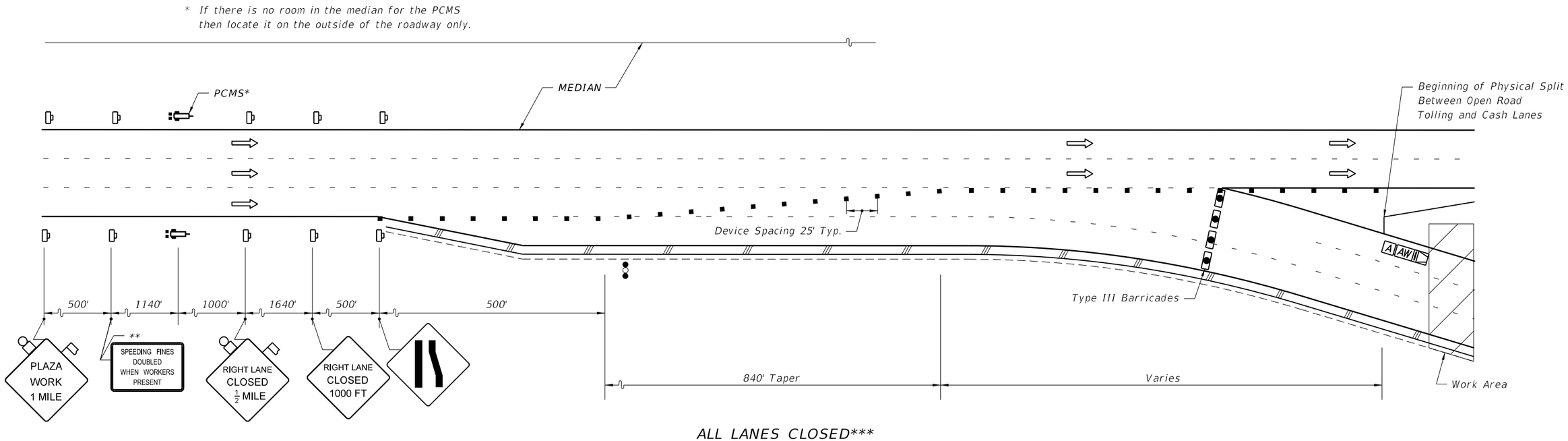

ALL LANES CLOSED***

** Install temporary Speeding Fines Doubled sign only if there is not an existing permanent "Speeding Fines Doubled Through Toll Plaza" sign or an existing "Speeding Fines Doubled When Workers Present" sign in place.

*** Inverted for Inside Open Road Tolling Lanes Configuration

SYMBOLS

- Work Area
- Sign With 18" x 18" (Min.) Orange Flag And Type B Light
- Channelizing Device (See Index No. 600)
- Work Zone Sign
- Advance Warning Arrow Board
- Lane Identification + Direction of Traffic
- Advance Warning Vehicle Equipped with Advance Warning Arrow Board and Truck/Trailer Mounted Attenuator
- Portable Changeable (Variable) Message Sign
- Type III Barricades w/ Flashing Lights and "RAMP CLOSED" sign

PCMS DISPLAYS

PCMS DISPLAY PRIOR TO CLOSURE

MESSAGE 1:	SUNPASS ONLY LANES	MESSAGE 2:	CLOSED "DATE(S)"

PCMS DISPLAY DURING CLOSURE

MESSAGE 1:	SUNPASS LANES CLOSED	MESSAGE 2:	USE CASH LANES

GENERAL NOTES

1. This Plan is to be used at Mainline Plazas Only.
2. This Plan is for lane closures of any time length.
3. Plaza canopies which have existing DMS signs on the canopies shall display the message "LANE CLOSED" for the duration of this closure.
4. For planned lane closure, a portable changeable message sign shall be placed and shall display the message shown at a minimum of one week prior to closure. If planned lane closure is less than one week, place portable changeable message sign immediately using "prior to closure" messages.
5. A truck/trailer mounted attenuator is required.
6. Lane closure configurations applicable to 2 or 3 lane open road tolling plazas.
7. At least 48 hours prior to any closure, other than emergencies, the plaza manager shall be notified for security and staffing.

OUTSIDE OPEN ROAD TOLLING LANES

C:\d\projects\standards\roadway\00600-s\00667-03.dgn
rd960rh
2:09:50 PM
6/28/2012

LAST REVISION	REVISION	DESCRIPTION:		FDOT DESIGN STANDARDS 2013	TOLL PLAZA TRAFFIC CONTROL STANDARDS	INDEX NO.	SHEET NO.
07/01/09						667	3

* If there is no room in the median for the PCMS sign, then locate it on the outside of the roadway only.

** Install temporary Speeding Fines Doubled sign only if there is not an existing permanent "Speeding Fines Doubled Through Toll Plaza" sign or an existing "Speeding Fines Doubled When Workers Present" sign in place.

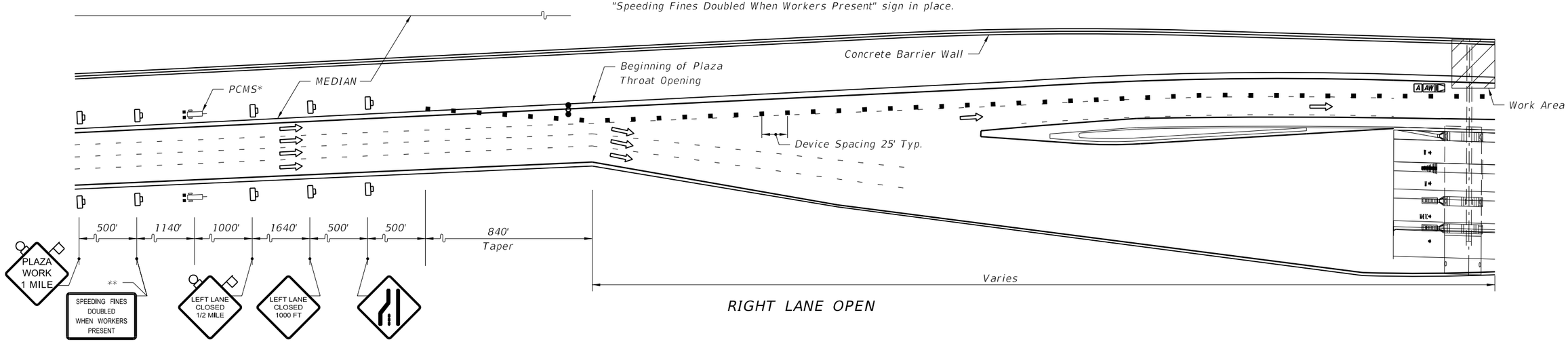

RIGHT LANE OPEN

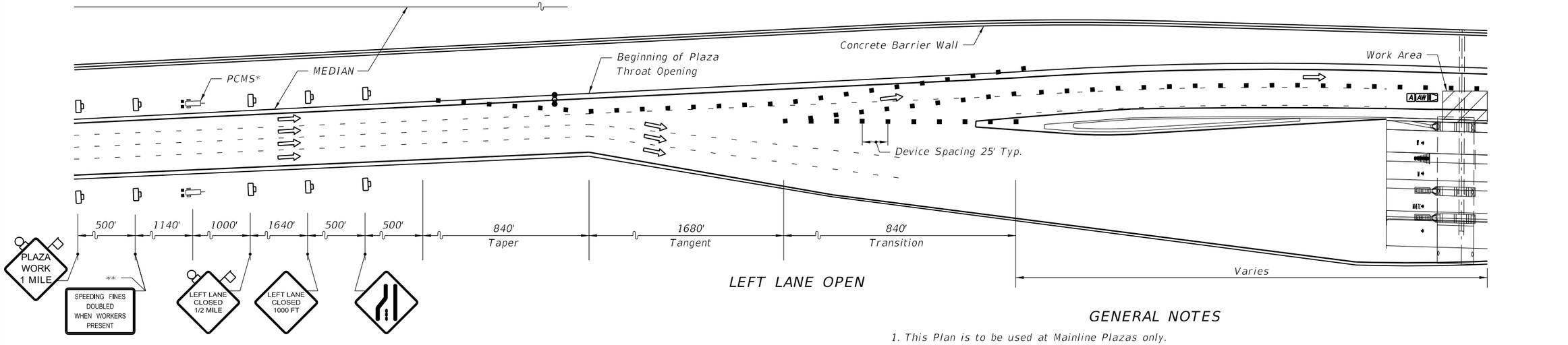

LEFT LANE OPEN

SYMBOLS

- Work Area
- Sign With 18" x 18" (Min.) Orange Flag And Type B Light
- Channelizing Device (See Index No. 600)
- Work Zone Sign
- Advance Warning Arrow Board
- Lane Identification + Direction of Traffic
- Advance Warning Vehicle Equipped with Advance Warning Arrow Board and Truck/Trailer Mounted Attenuator
- Portable Changeable (Variable) Message Sign

PCMS DISPLAYS

PCMS DISPLAY PRIOR TO CLOSURE

Message 1:	ONE SUNPASS ONLY	Message 2:	LANE OPEN "DATE(S)"

PCMS DISPLAY DURING CLOSURE

Message 1:	SUNPASS ONLY LANE	Message 2:	OPEN USE CAUTION

GENERAL NOTES

1. This Plan is to be used at Mainline Plazas only.
2. This Plan is for lane closures of any time length.
3. Plaza canopies which have existing DMS signs on the canopies shall display the message "LANE CLOSED" for the duration of this closure.
4. For planned lane closure, a portable changeable message sign shall be placed and shall display the messages shown at a minimum of one week prior to closure. If planned lane closure is less than one week, place portable changeable message sign immediately using "prior to closure" messages.
5. A truck/trailer mounted attenuator is required.
6. Lane closure configurations applicable to 2 or 3 lane open road tolling plazas.
7. At least 48 hours prior to any closure, other than emergencies, the plaza manager shall be notified for security and staffing.

INSIDE OPEN ROAD TOLLING LANES

LAST REVISION	REVISION	DESCRIPTION:				
07/01/09			FDOT DESIGN STANDARDS 2013	TOLL PLAZA TRAFFIC CONTROL STANDARDS	INDEX NO. 667	SHEET NO. 4

C:\d\projects\standards\roadway\00600-s\00667-04.dgn rd960rh 2:09:52 PM 6/28/2012

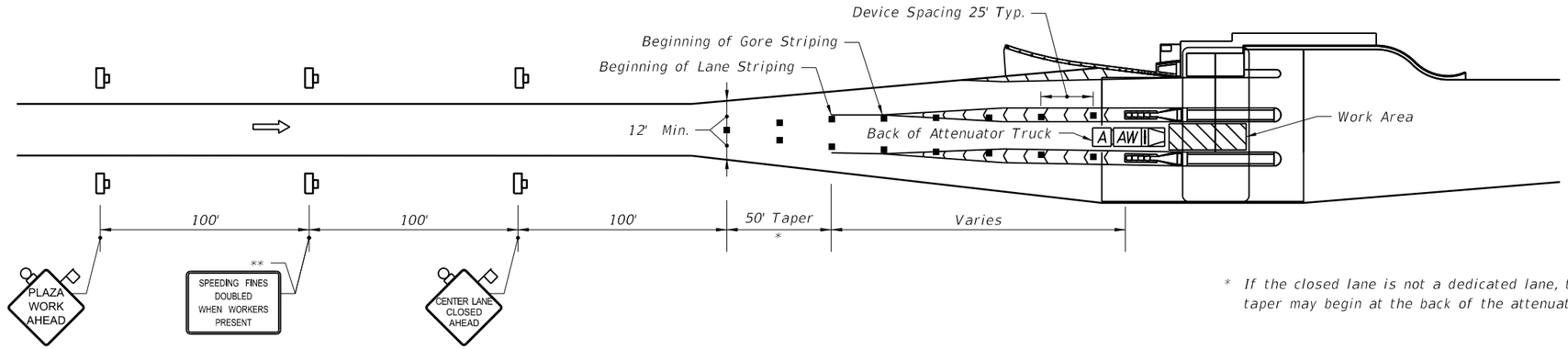

* If the closed lane is not a dedicated lane, the 50' taper may begin at the back of the attenuator truck.

EXHIBIT A

DEDICATED, CASH, OR MIXED-USE LANES IN CENTER - ONE LANE CLOSED
(This same plan can be used for any non-dedicated lane even if they are not in the center of the plaza)

** Install temporary Speeding Fines Doubled sign only if there is not an existing permanent "Speeding Fines Doubled Through Toll Plaza" sign or an existing "Speeding Fines Doubled When Workers Present" sign in place.

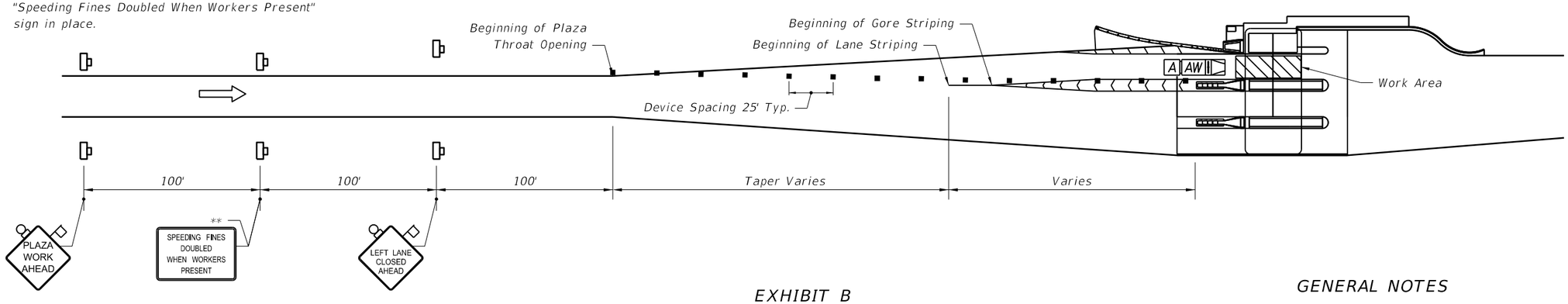

EXHIBIT B

DEDICATED LANE INSIDE OR OUTSIDE - ONE LANE CLOSED
(Outside Lane Closure is a Mirror Image of this Exhibit)

SYMBOLS

- Work Area
- Sign With 18" x 18" (Min.) Orange Flag And Type B Light
- Channelizing Device (See Index No. 600)
- Work Zone Sign
- Lane Identification + Direction of Traffic
- A AW — Advance Warning Vehicle Equipped with Advance Warning Arrow Board and Truck/Trailer Mounted Attenuator

GENERAL NOTES

1. This Plan is for lane closures that exceed three hours.
2. If the closed lane is a dedicated lane, Exhibit A shall be used at Ramp Plazas only. If the closed lane is a cash or mixed-use lane, Exhibit A may be used at Ramp or Mainline Plazas.
3. A truck/trailer mounted attenuator is required.
4. Exhibit B shall be used at Ramp Plazas only.
5. Lane use control lights, signs, or signals over toll lanes shall be switched to the appropriate symbol, message, or correct color prior to the start of any lane closure. They should also be switched at project completion.
6. At least 48 hours prior to any closure, other than emergencies, the plaza manager shall be notified for security and staffing.

MAINLINE PLAZAS & RAMP PLAZAS

LAST REVISION	REVISION	DESCRIPTION:		FDOT DESIGN STANDARDS 2013	TOLL PLAZA TRAFFIC CONTROL STANDARDS	INDEX NO.	SHEET NO.
07/01/09						667	5

C:\d\projects\standards\roadway\00600-s\00667-05.dgn
rd960rh
2:09:54 PM
6/28/2012

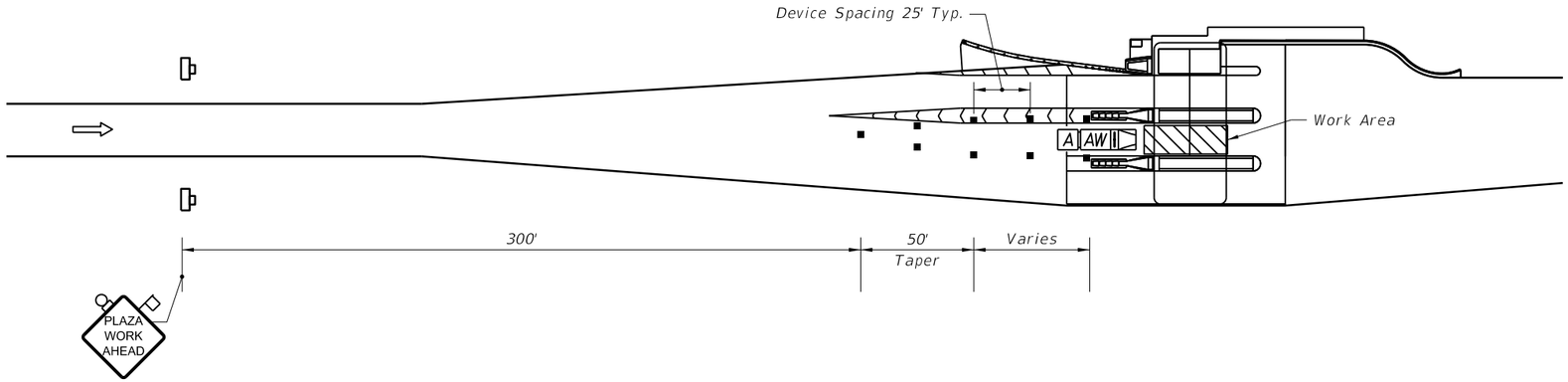

WORK DONE WITHIN TRAVEL LANE - ONE LANE CLOSED

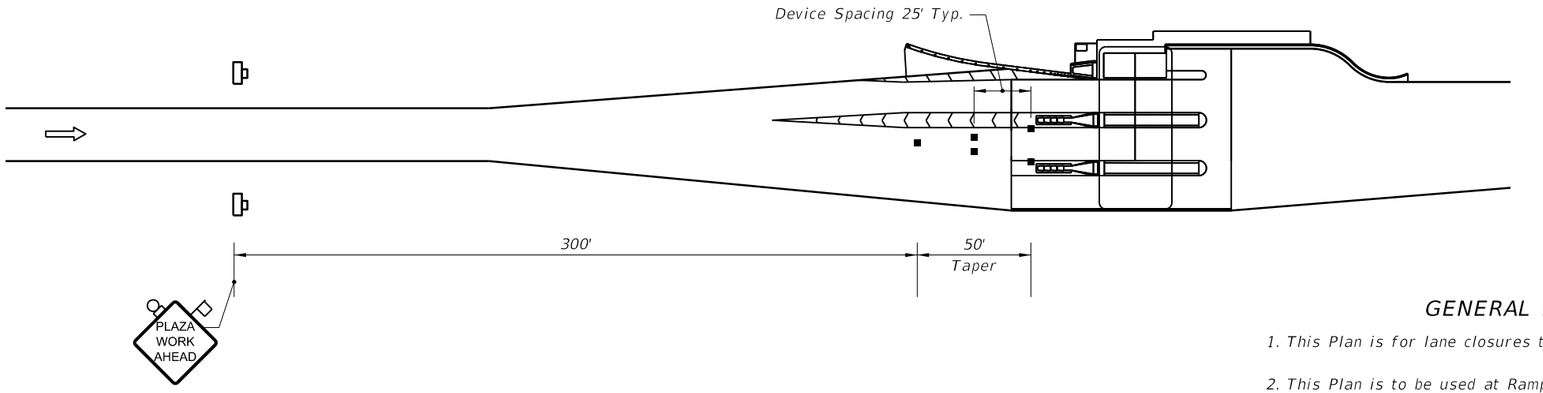

WORK NOT DONE WITHIN TRAVEL LANE - ONE LANE CLOSED

SYMBOLS

- Work Area
- Sign With 18" x 18" (Min.) Orange Flag And Type B Light
- Channelizing Device (See Index No. 600)
- Work Zone Sign
- Lane Identification + Direction of Traffic
- A AW — Advance Warning Vehicle Equipped with Advance Warning Arrow Board and Truck/Trailer Mounted Attenuator

GENERAL NOTES

1. This Plan is for lane closures that are three hours or less.
2. This Plan is to be used at Ramp or Mainline Plazas.
3. This plan can be used for any lane, with appropriate modifications, even if it is not in the center of the Plaza.
4. Lane use control lights, signs, or signals over toll lanes shall be switched to the appropriate symbol, message, or correct color prior to the start of any lane closure. They should also be switched at project completion.
5. At least 48 hours prior to any closure, other than emergencies, the plaza manager shall be notified for security and staffing.
6. A Truck/Trailer Mounted Attenuator is required for all aerial work operations (lift truck). For non-aerial operations, the Truck Mounted Attenuator or additional devices may be required by the Engineer based on the work being performed.

SHORT-TERM CLOSURES

C:\d\projects\standards\roadway\00600-s\00667-06.dgn
rd960rh
2:09:57 PM
6/28/2012

LAST REVISION	REVISION	DESCRIPTION:				
01/01/10			FDOT DESIGN STANDARDS 2013	TOLL PLAZA TRAFFIC CONTROL STANDARDS	INDEX NO. 667	SHEET NO. 6

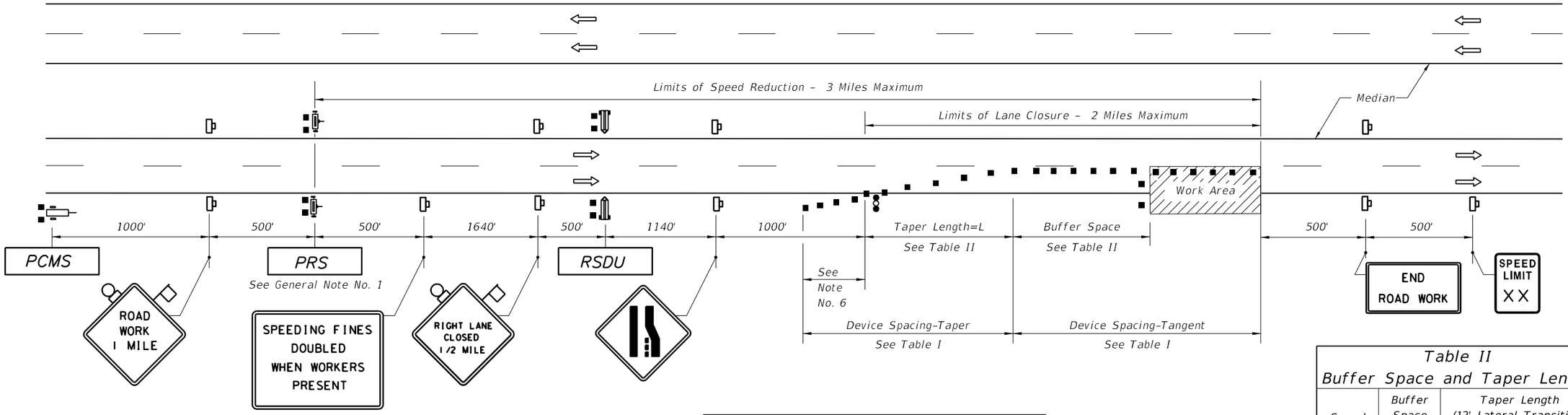

Typical PCMS Display

With speed reduction:
- *Message 1: WORKERS PRESENT AHEAD*
- *Message 2: SPEED REDUCED NEXT 3MI*

Without speed reduction:
- *Message 1: WORKERS PRESENT AHEAD*
- *Message 2: NEXT 3 MILES*

SYMBOLS

- Work Area
- Sign With 18"x 18" (Min.) Orange Flag And Type B Light
- Channelizing Device (See Index No. 600)
- Work Zone Sign
- Advance Warning Arrow Board
- Lane Identification + Direction of Traffic
- (1) PCMS= Portable Changeable(Variable) Message Sign
- (2) PRS= Portable Regulatory Sign– Speed Limit When Flashing
- (2) RSDU= Radar Speed Display Unit

Table I Device Spacing

Speed (mph)	Max. Distance Between Devices (ft.)			
	Cones or Tubular Markers		Type I or Type II Barricades or Vertical Panels or Drums	
	Taper	Tangent	Taper	Tangent
25	25	50	25	50
30 to 45	25	50	30	50
50 to 70	25	50	50	100

GENERAL NOTES

1. At lane closures where workers are present, reduce the posted speed limit (speed limit that existed prior to construction) by 10 MPH using the Portable Regulatory Sign (PRS), but not less than 55 MPH or to a speed warranted by geometric condition, whichever is lower. Taper lengths, buffer space and device spacing shall be selected using the posted speed, not the reduced speed.
2. All Arrow Boards, Portable Changeable Message Signs, Portable Regulatory Signs and Radar Speed Display Trailers, shall be turned off and moved outside the clear zone or be shielded by a barrier or crash cushion when not in use.
3. Work operations shall be confined to one traffic lane, leaving the adjacent lane(s) open to traffic.
4. When work is performed in the median lane on divided highways, the barricading plan is inverted and left lane closed and lane reduction signs substituted for the right lane closed and lane reduction signs.
5. When work is being performed on a multilane undivided roadway, the signs and traffic control devices normally placed in the median (as shown) shall be omitted.
6. When paved shoulders having a width of 8 ft. or more are closed, channelizing devices shall be used to close the shoulder in advance of the merging taper to direct vehicular traffic to remain within the travel way. See Index No. 612 for shoulder taper formulas.
7. For general TCZ requirements and additional information, refer to Index No. 600.

Table II Buffer Space and Taper Length

Speed (mph)	Buffer Space	Taper Length (12' Lateral Transition)	
	Dist. (ft.)	L (ft.)	Notes (Merge)
25	155	125	$L = \frac{WS^2}{60}$
30	200	180	
35	250	245	
40	305	320	
45	360	540	L = WS
50	425	600	
55	495	660	
60	570	720	
65	645	780	
70	730	840	

When Buffer Space cannot be attained due to geometric constraints, the greatest attainable length shall be used, but not less than 200 ft.

For lateral transitions other than 12', use formula for L shown in the notes column.
Where:
L= Length of taper in feet
W= Width of lateral transition in feet
S= Posted speed limit (mph)

CONDITIONS

The MAS shall be used if all the following conditions exist:

MULTILANE FACILITY

POSTED SPEED LIMIT IS 55 MPH OR GREATER

WORK ACTIVITY REQUIRES A LANE CLOSURE FOR MORE THAN 5 DAYS (CONSECUTIVE OR NOT)

WORKERS ARE PRESENT

C:\d\projects\standards\roadway\00600-s\00670-01.dgn
rd960rh
2:09:59 PM
6/28/2012

LAST REVISION	REVISION	DESCRIPTION:				
01/01/11			FDOT DESIGN STANDARDS 2013	MOTORIST AWARENESS SYSTEM	INDEX NO. 670	SHEET NO. 1

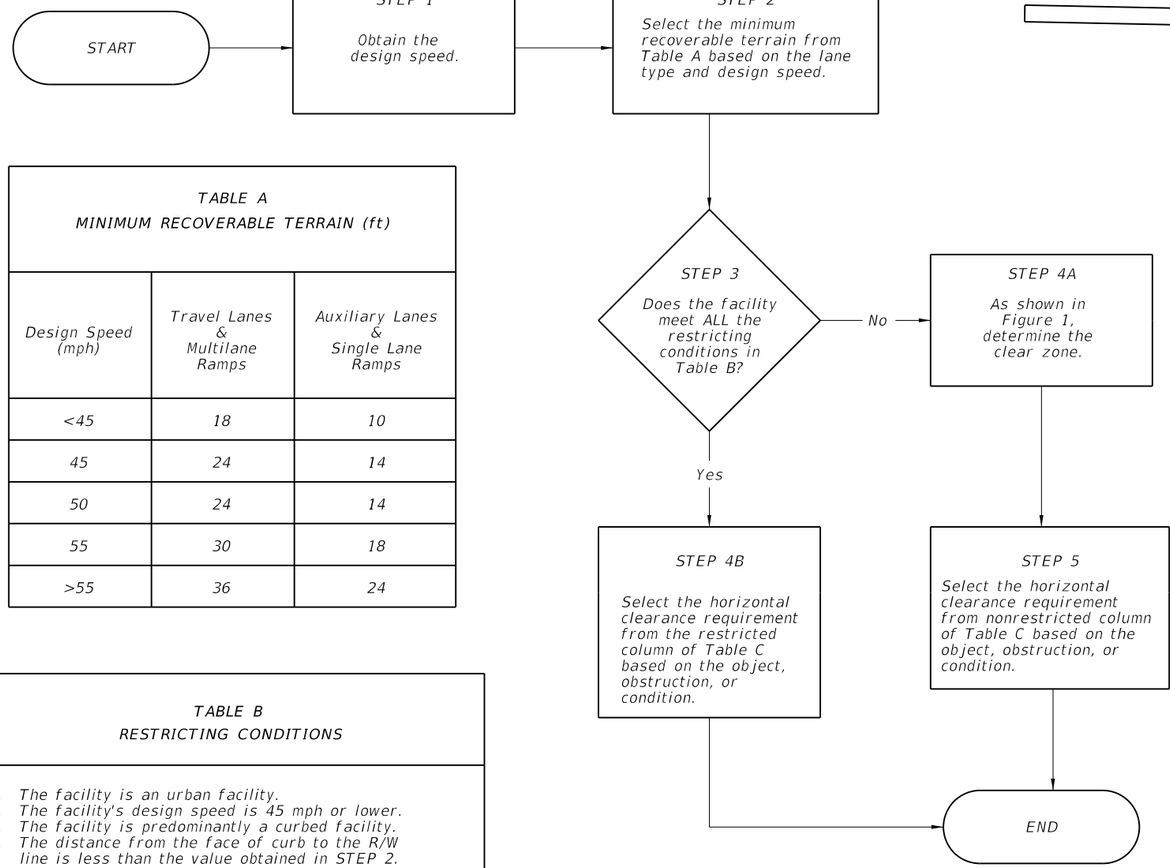

TABLE A MINIMUM RECOVERABLE TERRAIN (ft)		
Design Speed (mph)	Travel Lanes & Multilane Ramps	Auxiliary Lanes & Single Lane Ramps
<45	18	10
45	24	14
50	24	14
55	30	18
>55	36	24

TABLE B RESTRICTING CONDITIONS
1. The facility is an urban facility. 2. The facility's design speed is 45 mph or lower. 3. The facility is predominantly a curbed facility. 4. The distance from the face of curb to the R/W line is less than the value obtained in STEP 2.

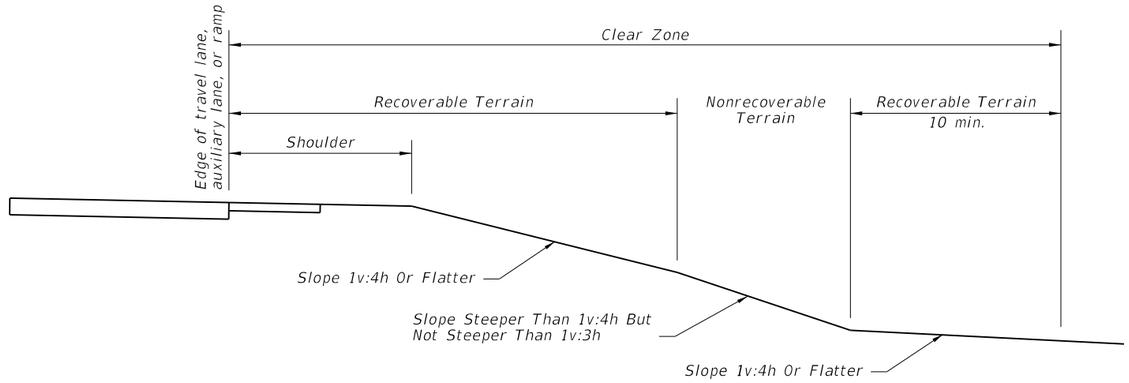

Clear Zone is the relatively flat unobstructed area that is to be provided for safe use by errant vehicles, and must be wide enough so that the sum of all the recoverable terrain within is equal to or greater than the value obtained in STEP 2. Recoverable terrain provided beyond nonrecoverable terrain must be a minimum of 10 feet. Areas beyond nontraversable and hazardous terrain cannot be used as recoverable or nonrecoverable terrain.

Roadside Terrain includes all surfaces along the roadway other than travel lanes, auxiliary lanes, and ramps. For the purpose of establishing clear zones and horizontal clearance requirements, roadside terrain is defined as recoverable, nonrecoverable, non-traversable, and hazardous as follows:

Recoverable when it is safely traversable and on a slope that is 1v:4h or flatter.
Nonrecoverable when it is safely traversable and on a slope that is steeper than 1v:4h but not steeper than 1v:3h.
Nontraversable when it is not safely traversable or on a slope that is steeper than 1v:3h.
Hazardous when a slope is steeper than 1v:3h and deeper than 6 feet as shown in Figure 2.

Horizontal Clearance Requirements are shown in Table C and are the required offsets to an object from a specified point on the roadway.

ROADSIDE TERRAIN
FIGURE 1

PROCESS FOR DETERMINING HORIZONTAL CLEARANCE REQUIREMENTS AND CLEAR ZONES

C:\d\projects\standards\roadway\00700-s\00700-01.dgn
rd960rh
2:10:01 PM
6/28/2012

TABLE C

	Item No.	OBJECTS, OBSTRUCTIONS OR CONDITIONS	HORIZONTAL CLEARANCE REQUIREMENTS	
			Restricted	Nonrestricted
GENERAL	1	Above ground fixed hazards: All roadside objects, obstructions or conditions other than those listed below that exceed 4 inches in height and pose a hazard to errant vehicles and vehicle occupants.	Locate as close to the Right Of Way as practical and not less than 4 feet from face of curb.	Locate outside the clear zone as close to the Right Of Way as practical.
ROADWAY	2	All FDOT approved guardrails, crash cushions, permanent or temporary concrete barriers, and guardrail end terminals.	Locate as shown in the Design Standards.	Locate as shown in the Design Standards.
	3	Drop-off hazards: Any point along a roadside slope steeper than 1v:3h that is deeper than 6 feet below the hinge point. See Figure 2.	Locate the point that is 6 feet below the hinge point no less than 22 feet from the traveled way.	Treat as roadside slopes in accordance with Design Standard 400.
	4	Mailboxes not shown in Design Standard 532.	Not to be used.	Not to be used.
	5	Mailboxes shown in Design Standard 532.	Locate in accordance with Design Standard 532.	Locate in accordance with Design Standard 532.
	6	Trees expected to become greater than 4 inches in diameter measured 6 inches above the ground.	Outside roadways: Locate no less than 4 feet from face of curb in accordance with Design Standard 546. Inside medians: Locate no less than 6 feet from the edge of traffic lane and in accordance with Design Standard 546.	Locate outside the clear zone as close to the Right Of Way as practical and in accordance with Design Standard 546.
	7	Trees not expected to become greater than 4 inches in diameter measured 6 inches above the ground.	Locate in accordance with Design Standard 546.	Locate in accordance with Design Standard 546.
	8	Canals behind guardrail.	Locate no less than 5 feet from the back of the guardrail post.	Locate no less than 5 feet from the back of the guardrail post.
	9	Canals without guardrail.	Locate as close to the Right Of Way as practical and not less than 40 feet from the traveled way.	Design speeds of 50 mph and greater: Locate as close to the Right Of Way as practical and not less than 60 feet from the traveled way. Design speeds less that 50 mph: Locate as close to the Right Of Way as practical and not less than 50 feet from the traveled way.
DRAINAGE	10	Culvert wing wall, endwall, retaining walls and flared end sections less than 6 feet deep.	Locate no less than 4 feet from face of curb.	Locate outside the clear zone.
	11	Culvert wing wall, endwall, retaining walls and flared end sections 6 feet and greater in depth.	Treat as drop-off hazard; See Item No. 3.	Treat as drop-off hazard; See Item No. 3.
	12	Mitered end sections.	Locate as shown in Design Standards 272 and 273.	Locate as shown in Design Standards.
TRAFFIC CONTROL DEVICES	13	Frangible sign supports.	Locate no less than 4 feet from face of curb and in accordance with Design Standard 17302.	Locate in accordance with Design Standard 17302.
	14	Overhead sign supports and other nonfrangible signs.	Locate no less than 4 feet from face of curb.	Locate outside the clear zone.
	15	Signal controller cabinets, signal poles, strain poles and mast arms.	Locate no less than 4 feet from face of curb and not in medians.	Locate outside the clear zone and not in medians.
LIGHTING	16	Conventional lighting (frangible and nonfrangible).	Locate no less than 4 feet from face of curb and not in medians.	Locate 20 feet from travel lanes or 14 feet from auxiliary lanes. Not in medians. May be clear zone width when the clear zone is less than 20 feet.
	17	Highmast lighting.	Not applicable.	Locate outside the clear zone.
STRUCT.	18	Bridge piers and abutments: Above ground vertical structures.	Locate not less than 16 feet from edge of travel lane.	Locate outside the clear zone.
UTILITIES	19	Fire hydrants with bases no higher than 4 inches above the ground.	Locate not less than 2 feet from face of curb.	Locate as close to the Right Of Way as practical.
	20	Utility installations: All above ground fixed objects.	Locate as close to the Right Of Way as practical and not less than 4 feet from face of curb and not in medians.	Locate outside the clear zone as close to the Right Of Way as practical and not in medians and not within limited access facilities. May be placed 4 feet behind the back of shields that have been justified for other reasons.
RAILROADS	21	Railroad crossing traffic control devices.	Locate in accordance with Design Standard 17882.	Locate in accordance with Design Standard 17882.

GENERAL NOTES

1. When shielding an object and sidewalks are present, an unobstructed sidewalk width of at least 4 feet must be provided.
2. When site specific conditions prohibit meeting the horizontal clearance requirements in TABLE C, the object, obstruction or condition must be mitigated, possibly by shielding. Otherwise, the Plans Preparation Manual, Volume 1, Chapters 2, 4, 21 and 25, or the Utility Accommodation Manual must be researched to determine viable alternatives. The minimum requirements in these manuals can only be reduced when a Design Variation or Design Exception has been approved in accordance with Chapter 23 of the Plans Preparation Manual, Volume 1 or a Utility Exception has been approved in accordance with the Utility Accommodation Manual.

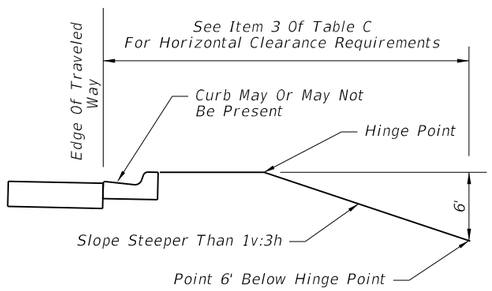

DROP-OFF HAZARDS

FIGURE 2

C:\fdot_projects\standards\roadway\00700-s\00700-02.dgn
6/28/2012 2:10:03 PM rd960rh

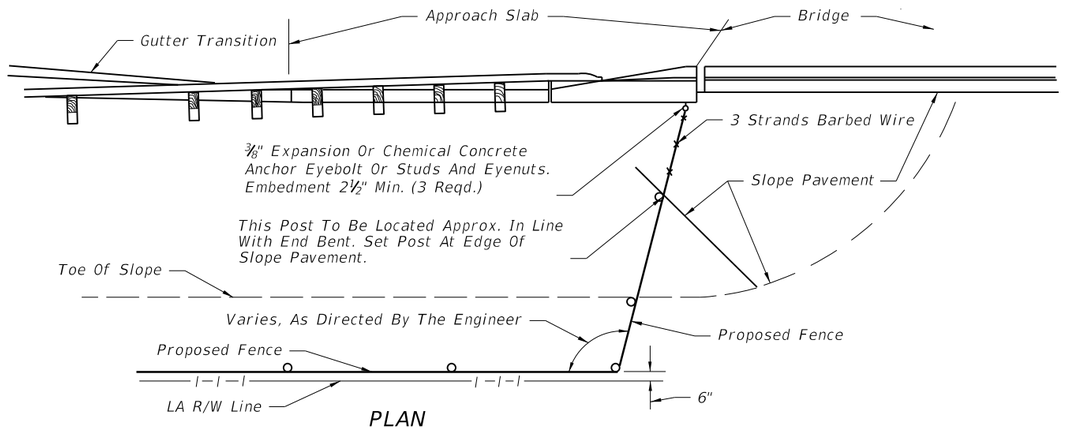

PLAN

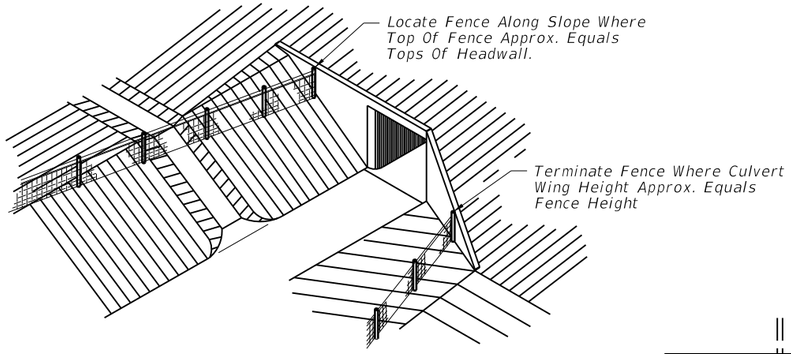

PICTORIAL VIEW

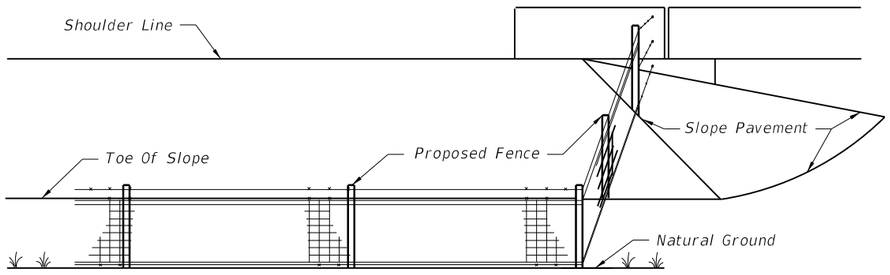

ELEVATION

FENCING TERMINALS AT BRIDGE ENDS
(ROADWAY)

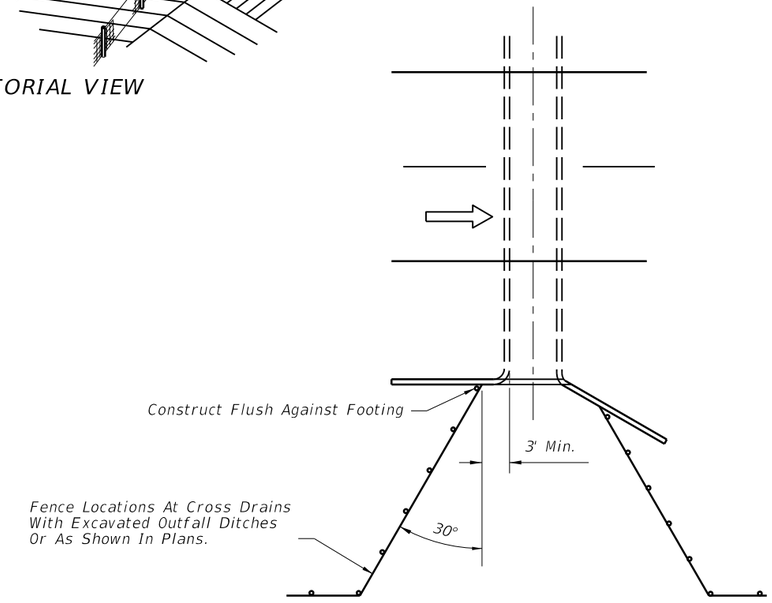

PLAN
(For Heights Of Headwall Greater Than 4')
FENCING TERMINALS AT BOX CULVERTS

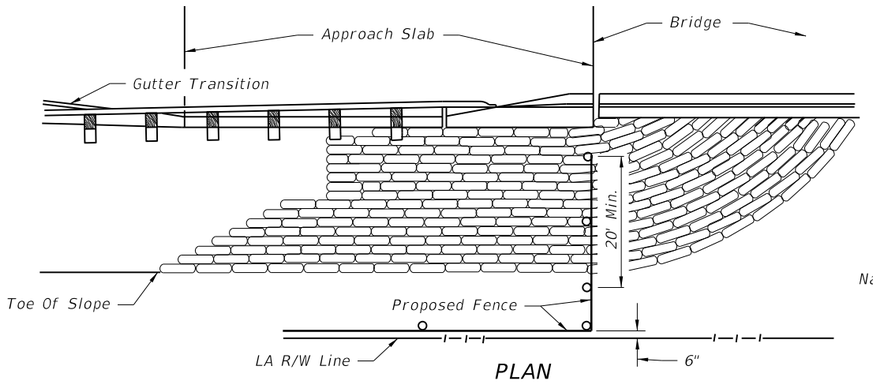

PLAN

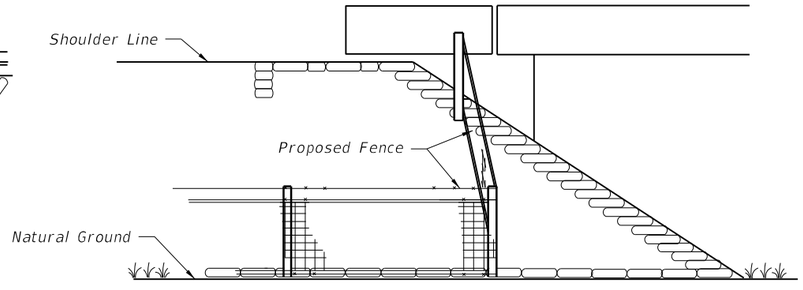

ELEVATION

FENCING TERMINALS AT BRIDGE ENDS
(STREAM CROSSING)

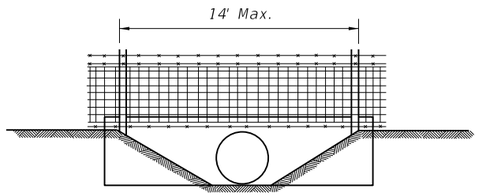

FENCING DETAIL AT CULVERT
(For Heights Of Headwalls 4' Or Less.)

Note: When height of headwall is 4' or less (drainage pipe 36" or less) the fence shall not be tied to the headwall, but shall span the lateral ditch.

LAST REVISION	REVISION	DESCRIPTION:		FDOT DESIGN STANDARDS 2013	FENCE LOCATION	INDEX NO.	SHEET NO.
07/01/05						800	1

6/28/2012 2:10:05 PM rd960rh C:\d\projects\standards\roadway\00800-s\00800-01.dgn

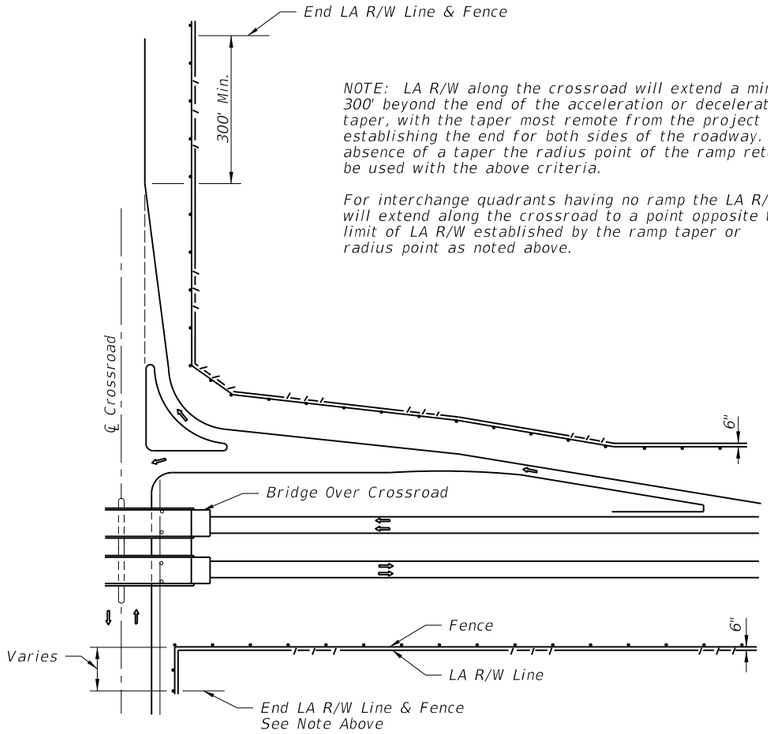

NOTE: LA R/W along the crossroad will extend a minimum 300' beyond the end of the acceleration or deceleration taper, with the taper most remote from the project establishing the end for both sides of the roadway. In the absence of a taper the radius point of the ramp return will be used with the above criteria.

For interchange quadrants having no ramp the LA R/W will extend along the crossroad to a point opposite the limit of LA R/W established by the ramp taper or radius point as noted above.

APPLIES TO BRIDGE OVER CROSSROAD AND CROSSROAD OVER FREEWAY (BRIDGE OVER CROSSROAD SHOWN)

FENCING TERMINALS AT RURAL INTERCHANGES

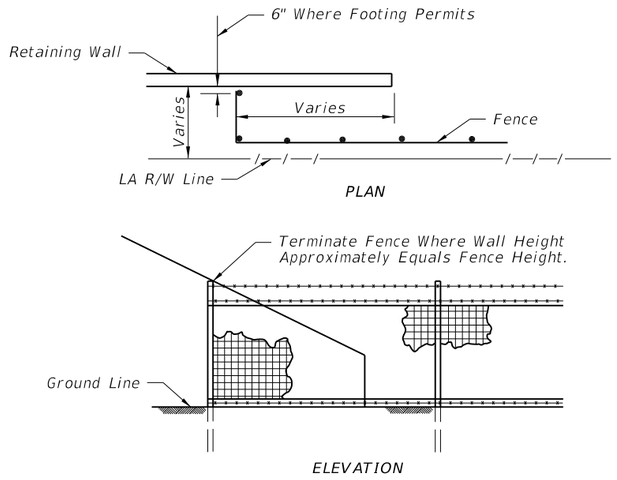

FENCING TERMINALS AT RETAINING WALLS

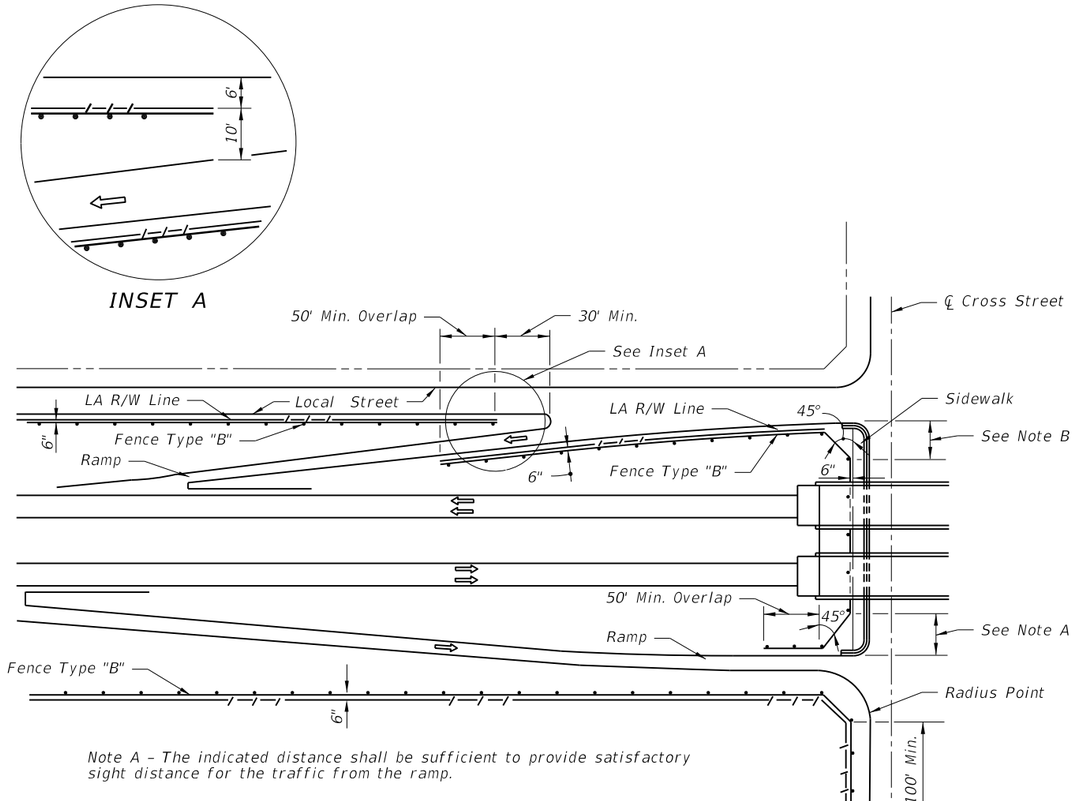

Note A – The indicated distance shall be sufficient to provide satisfactory sight distance for the traffic from the ramp.

Note B – The indicated distance shall be identical to the above noted dimension, if practical.

FENCING TERMINALS AT URBAN INTERCHANGES

LAST REVISION	REVISION	DESCRIPTION:		FDOT DESIGN STANDARDS 2013	FENCE LOCATION	INDEX NO.	SHEET NO.
07/01/05						800	2

6/28/2012 2:10:07 PM rd960rh C:\d\projects\standards\roadway\00800-s\00800-02.dgn

GENERAL NOTES

1. This fence to be provided generally in rural areas. For supplemental information see Section 550 of the FDOT Specifications.

2. Fabric shall be woven wire, either galvanized steel, meeting the requirements of ASTM A116, No. 9 Grade 60, Design Number 1047–6–9, with Class 3 zinc coating; No. 12 ½ Grade 175, Design Number 1047–6–12 ½, with a 10 ½ gage top and bottom wire and with Class 3 zinc coating; or aluminum coated steel, meeting the requirements of ASTM A584, No. 9 Farm, Design Number 1047–6–9, with a minimum coating weight of 0.40 oz./ft.^{2}. For additional information see payment note below.

3. Fence shall be installed with wire side to private property except on horizontal curves greater than 3° the fence shall be installed so as to pull against all posts.

4. Posts may be either timber, steel, recycled plastic or concrete. Unless a specific post material is called for in the plans, the Contractor may elect to use either a single material or a combination of timber, steel, recycled plastic or concrete materials. Line posts of one material may be used with corner, pull and end post assemblies of a different material. Line posts of only one optional material and pull post assemblies of only one optional material will be permitted between corner and end post assemblies. Within individual corner and end post assemblies only one optional material will be permitted.

5. Timber posts shall meet the material requirements of Specification Section 954. Timber line posts are to be minimum 4" diameter. Timber corner, pull, approach and end posts are to be a minimum 5" diameter. Timber braces are to be minimum 4" diameter.
   (A) Staples for line posts to be 1¼" minimum length; for approach, corner and pull posts 1½" minimum length. At approach, corner and pull posts, staple every line wire. At line posts, staple every line wire in top half and alternate line wires in bottom half. Staples shall be driven diagonally across the line wire with the points in separate grains.
   (B) Connections between timber posts and braces to be provided by dowels as shown in fastener details.
   (C) Wire to be wrapped and tied, as shown in the splice details, at the following locations:
   (a) All end posts, (b) Corner post, including the assemblies at vertical breaks of 15° or more and
   (c) Pull posts where the wire is not spliced and pulled through the assembly; see General Note 18.

6. Steel posts and braces shall be standard steel posts, galvanized at the rate of 2 oz./ft.^{2}, together with necessary hardware and wire clamps and meeting the following requirements:
   (A) Line posts: 8' long; 1.33 lbs./ft.; roll formed studding; anchor plate attached (23 in.^{2}).
   (B) Approach posts: 2½"x2½"x¼" angles, 8' long; fabricated for attaching brace; with necessary hardware, clamps, etc.
   (C) Pull, end and corner posts: 2½"x2½"x¼" angles, 8' long; fabricated for attaching brace; with necessary hardware, clamps, etc.
   (D) Braces: 2"x2"x¼" angles with necessary hardware and fabricated for attaching to post.
   (E) The pull, corner, approach and end posts are to be set in concrete as per detail. (Also see General Note No. 15)

7. Recycled plastic posts shall meet the following material requirements: Line posts shall have a minimum section of 4" round or 4" square. Plastic posts shall not be used as corner, pull, end or approach posts unless such use is specifically detailed in the plans. The straightness of the post shall comply with 954–5 for timber post. The flexural strength shall meet the requirements of the latest edition of the Southern Pine Inspection Bureau's Standard Grading Rules for Southern Pine Lumber for No. 2SR Stress Rated Grade Timber. Plastic posts can be set by either digging and tamped backfill or by driving into full depth preformed holes ¼" to ½" smaller than cross section of post. Staples for fabric and barbed wire connection to plastic line posts shall be the same size, count and location as that for timber posts.

8. The Contractor, at his option, may use any suitable precast or prestressed concrete posts; however, approval by the Engineer, of posts not shown on this index, will be required prior to construction of the fence. Precast posts shall be Class I concrete. Prestressed posts shall be Class III concrete. Lengths of concrete post to be as indicated for timber posts.

9. Aluminum post, braces and accessory framing hardware shall not be used unless the plans specifically detail their application or the Engineer specifically approves their incorporation in fence construction or repair. Aluminum framed gates are permitted as described in General Note 19.

10. The woven wire shall be attached to steel and concrete posts by a minimum of five tie wires. The single wire ties shall be applied to the top, bottom and three intermittent line wires. The ends of each tie wire shall have a minimum of two tight turns around the line wire. Tie wires shall be steel wire not less than 0.120" diameter, zinc coating Class 3, soft temper, in accordance with ASTM A641.

11. Steel Barbed Wire can be either of the following types:
   Type I: This type shall conform to the requirements of ASTM A121, with two strands of 12½ gage wire; four–point barbs, wire size 14 gage, twisted around both line wires; and, Class 3 coating, Design No. 12–4–5–14R.
   Type IIA: This type same as Type I except the two strand wires are twisted in alternating directions between consecutive barbs.
   Type IIB: This type shall conform to the requirements of ASTM A121 with two strands of 15 ½ gage high tensile wire; four–point barbs, wire size 16 ½ gage twisted around both line wires; and Class 3 coating, Design No. 15–4–5–16R.
   Aluminum Barbed Wire shall be fabricated of two strands of 0.110–inch wire with 0.08–inch diameter four–point barbs spaced at approximately 5½", and at a maximum spacing of 6". The wire for the strands and for the barbs shall be of ASTM B211M Alloy 5052–H38 or equal.

12. The woven wire shall be stretched only until one–half the tension curl has been pulled out of the line wires.

13. Posts to be set by driving or digging. If by digging, the posts shall be set at the center of the hole and the soil tamped securely on all sides.

14. Longer posts than those indicated above may be required by the plans or for deeper installations.

15. Concrete bases for angular steel posts (pull, corner, end and approach) shall be Class NS as specified in Section 347. Materials for Class NS concrete may be proportioned by volume and/or by weight.

16. Pull post assemblies shall be installed at approximately 330' centers except that this maximum interval may be reduced by the Engineer on curves where the radius is less than 3°.

17. Corner post assemblies are to be installed at all horizontal and vertical breaks in fence of 15° or more.

18. A maximum length of 1320' of wire may be installed as a unit. For pulls through a pull post assembly the fabric shall be spliced by crimping sleeves only. Pulls through a corner post assembly will not be permitted.

19. Unless otherwise called for in the plans gates shall be commercially available metal swing gates assembled and installed in accordance with the manufacturer's specifications as approved by the Engineer. Chain link swing gates in accordance with Index No. 802 may be substituted for metal swing gates as approved by the Engineer. Gate size is full opening width whether single leaf or double leaves. Payment for gates shall include the gate, single or double, all necessary hardware for installation and any additional length and/or size for posts at the opening. Gates shall be paid for under the contract unit price for Fence Gates, EA.

20. For construction purposes, assemblies are defined as follows: End post assemblies shall consist of: one end post, one approach post, two braces, four diagonal tension wires and all necessary fittings and hardware. Pull post assemblies shall consist of: one pull post, two braces, four diagonal tension wires and necessary fittings and hardware. Corner post assemblies shall consist of: one corner post, two approach posts, four braces, eight diagonal tension wires and all necessary fittings and hardware.

21. All posts, braces, tension wires, fabric, tie wires, Class NS concrete, and all miscellaneous fittings and hardware to be included in the cost for Fencing, LF. Fencing shall be inclusive of the lengths of pull, end and corner post assemblies, but exclusive of gate widths.

C:\d\projects\standards\roadway\00800–s\00801–01.dgn
rd960rh
2:10:09 PM
6/28/2012

LAST REVISION	REVISION	DESCRIPTION:				
07/01/12			FDOT DESIGN STANDARDS 2013	FENCE TYPE A	INDEX NO. 801	SHEET NO. 1

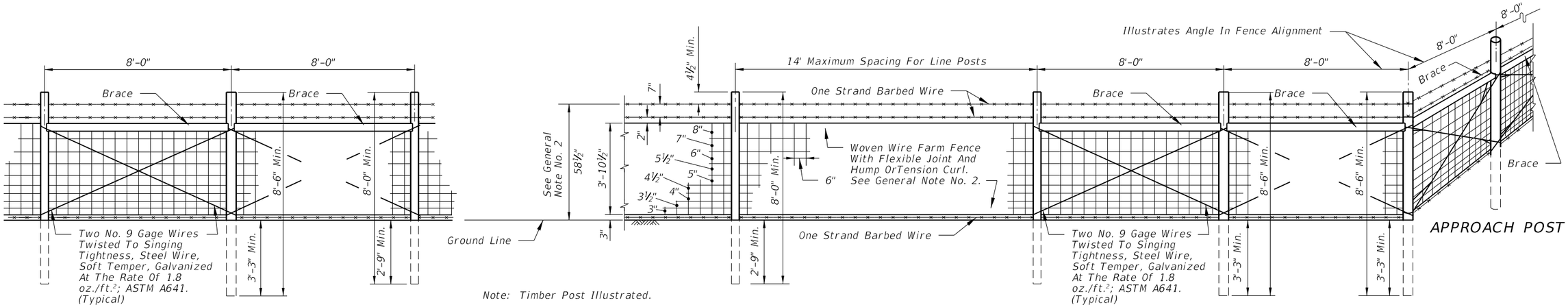

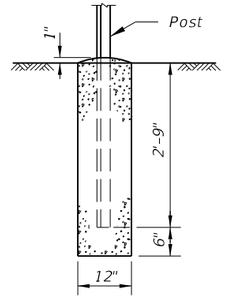

(Pull, Corner, End And Approach Posts)

CONCRETE BASE FOR ANGULAR STEEL POST

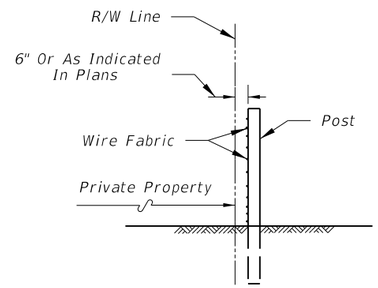

FENCE POSITION AT LOCATIONS WITHOUT FRONTAGE ROADS

(REFER TO DETAIL PLANS FOR FENCE POSITION AT LOCATIONS WITH FRONTAGE ROADS)

DESIGN NOTE

This index details fencing that is constructed with farm fabric 46½" (47" nominal) in height and with specific ground clearance and specific barbed wire spacings. For fencing of different height or installation details, the fence shall be fully detailed in the Contract plans.

6/28/2012 2:10:12 PM rd960rh C:\d\projects\standards\roadway\00800-s\00801-02.dgn

LAST REVISION	REVISION	DESCRIPTION:		FDOT DESIGN STANDARDS 2013	FENCE TYPE A	INDEX NO.	SHEET NO.
07/01/07						801	2

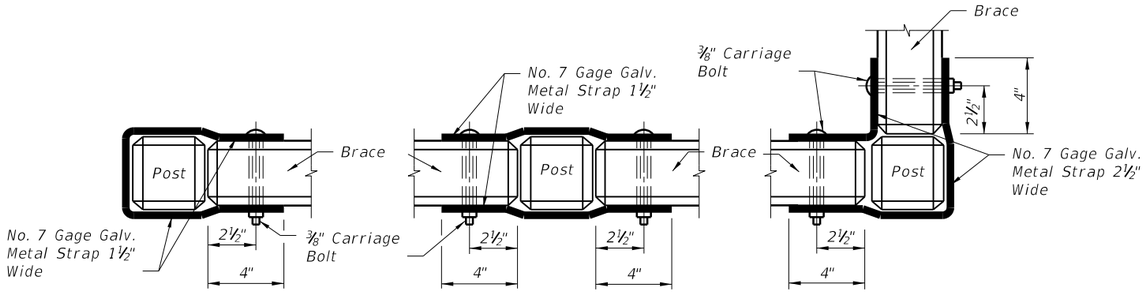

BRACE AND POST

BRACE TO BRACE ON LINE

BRACE TO BRACE AT CORNER

FASTENER FOR CONCRETE POST AND BRACES

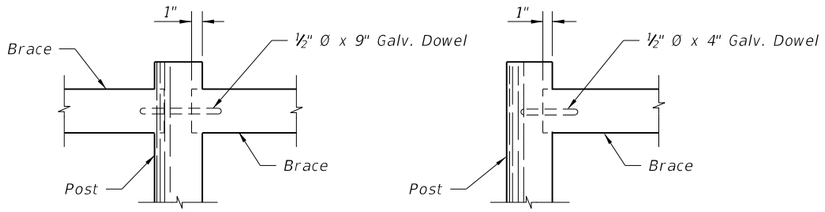

FASTENER FOR TIMBER POST AND BRACE

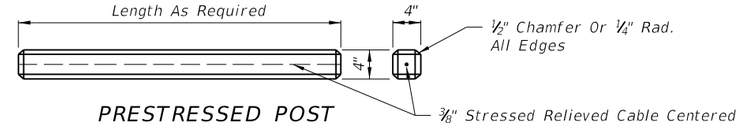

PRESTRESSED POST

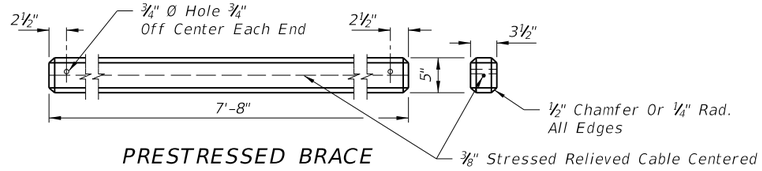

PRESTRESSED BRACE

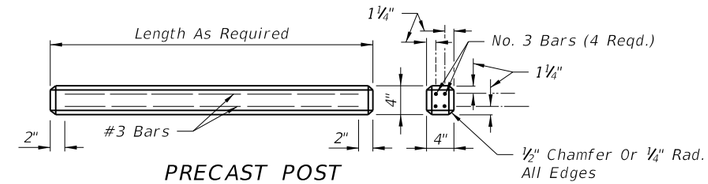

PRECAST POST

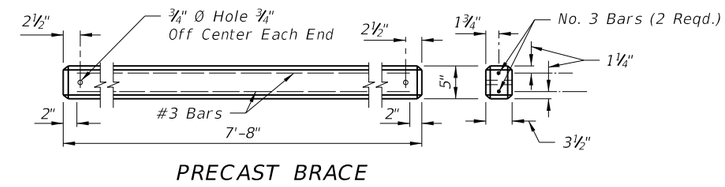

PRECAST BRACE

ALTERNATE CONCRETE POSTS AND BRACES

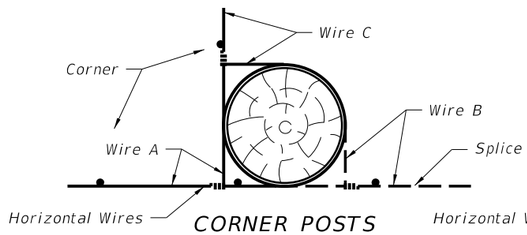

CORNER POSTS

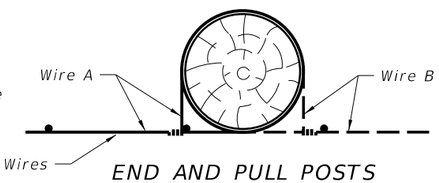

END AND PULL POSTS

Each horizontal wire to be wrapped around corner, end and pull posts and tied to same wire. See General Notes 5 and 17. Timber post illustrated. These methods also apply to steel and concrete post illustrations.

SPLICES

6/28/2012 2:10:14 PM rd960rh C:\d\projects\standards\roadway\00800-s\00801-03.dgn

LAST REVISION	REVISION	DESCRIPTION:		FDOT DESIGN STANDARDS 2013	FENCE TYPE A	INDEX NO.	SHEET NO.
07/01/05						801	3

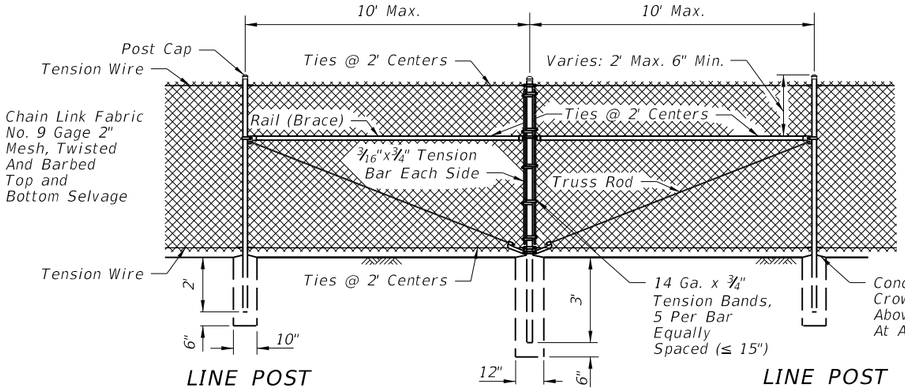

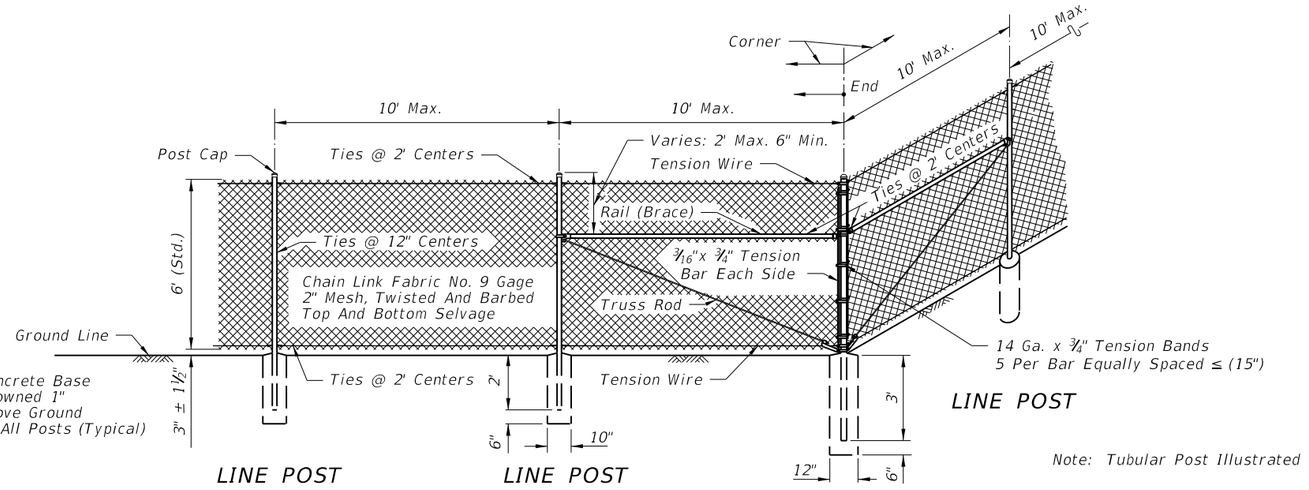

Note: Tubular Post Illustrated

GENERAL NOTES

1. This fence to be used generally in urban areas.

2. For supplemental information refer to Section 550 of FDOT Standard Specifications.

3. Chain link fabric, post, truss rods, tension wires, tie wires, stretcher bars, gates and all miscellaneous fittings and hardware shall meet the requirements of AASHTO and ASTM signify current reference.

4. Fence Component Options:

   A. Line post options:

   (1) Galvanized steel pipe, Schedule 40– 1½" nominal dia. zinc galvanized at the rate of 1.8 oz./ft².: ASTM A53 Table 2 (Grade A or B), ASTM F1083, and AASHTO M111.
   (2) Aluminum coated steel pipe: ASTM A53, Table 2 (Grade A or B): Schedule 40– 1½" nominal dia., 1.90" OD; coated at the rate 0.40 oz./ft.: AASHTO M111.
   (3) Aluminum alloy pipe– 2" nominal dia.: ASTM B241 or B221, Alloy 6063, T6.
   (4) Steel H–Beam– 1⅞"x 1⅝": Zinc Galv. 1.8 oz./ft.: AASHTO M111 and Detail.
   (5) Aluminum alloy H–Beam– 1⅞"X 1⅝" Detail.
   (6) Steel C– 1⅞"X 1⅝": Galv.: 1.8 oz/ft. zinc: AASHTO M111; OR , 0.9 oz./ft². zinc–5% aluminum–mischmetal: ASTM F1043 and Detail.
   (7) Resistance welded steel pipe; 50,000 psi min. yield strength ASTM A569/A569M, A653/A653M or undepleted stock of discontinued A446/A446M base materials; ASTM F669 Group IV (Alternative Design); fence industry 2" OD, 1½" NPS, 1.900" dec. equiv., 0.120" min. wall thick. and min. wt. 2.28 lb./ft.; with ASTM F1043 metric equivalent internal coating Types A, B, C or D and external coating Types A, B, or C; the chromate conversion coating of external Type B shall have a thickness of 15µg/in². min. and the polymer film topcoat shall have a thickness of 0.0003" min.; internal and external coatings are not restricted to the combinations of Table 2, ASTM F1043.

   B. Corner, end, and pull post options:

   (1) Galvanized steel pipe, Schedule 40– 2" nominal dia. zinc galvanized at the rate of 1.8 oz./ft².: ASTM A53 Table X 2, ASTM F1083, and AASHTO M111.
   (2) Aluminum coated steel pipe: ASTM A53 steel, X 2 Tables: Schedule 40; 2" nominal dia., 2.375" OD; coated at the rate 0.40 oz./ft.: AASHTO M111.
   (3) Aluminum alloy pipe– 2½" nominal dia.: ASTM B241 or B221, Alloy 6063,T6.
   (4) Resistance welded steel pipe; 50,000 psi min. yield strength ASTM A569/A569M, A653/A653M or undepleted stock of discontinued A446/A446M base materials; ASTM F669 Group IV (Alternative Design); fence industry 2½" OD, 2" NPS, 2.375" dec. equiv., 0.130"min. wall thick. and min. wt. 3.117 lb./ft.; with ASTM F1043 metric equivalent internal coating Types A, B, C or D and external coating Types A, B, or C; the chromate conversion coating of external Type B shall have a thickness of 15µg/in². min. and the polymer film topcoat shall have a thickness of 0.0003" min.; internal and external coatings are not restricted to the combinations of Table 2, ASTM F1043.

   C. Rail options:

   (1) Galvanized steel pipe, Schedule 40– 1¼" nominal dia. zinc galvanized at the rate of 1.8 oz./ft².: ASTM A53 Table X 2, ASTM F1083, and AASHTO M111.
   (2) Aluminum coated steel pipe; ASTM A53 steel, X 2 Tables Schedule 40; 1¼" nominal dia., 1.660" OD; coated at the rate 0.40 oz./ft.: AASHTO M111.
   (3) Aluminum alloy pipe– 1¼" nominal dia.: ASTM B241 or B221, Alloy 6063, T6.
   (4) Resistance welded steel pipe; 50,000 psi min. yeild strength ASTM A569/A569M, A653/A653M or undepleted stock of discontinued A446/A446M base materials; ASTM F669 Group IV (Alternative Design); fence industry 1⅞" OD, 1¼" NPS, 1.660" dec. equiv., 0.111" min. wall thick. and min. wt. 1.836 lb./ft.; with ASTM F1043 metric equivalent internal coating Types A, B, C or D and external coating Types A, B, or C; the chromate conversion coating of external Type B shall have a thickness of 15µg/in². min. and the polymer film topcoat shall have a thickness of 0.0003" min.; internal and external coatings are not restricted to the combinations of Table 2, ASTM F1043.

   D. Chain link fabric options (2" mesh with twisted and barbed selvage top and bottom for all options except as described in Note No. 10):

   (1) AASHTO M181 Type I – Zinc Coated Steel, No. 9 gage (coated wire diameter), coated at the rate of 1.8 oz/ft². (M181 Class D 2.0 oz./ft². modified to 1.8 oz./ft².).
   (2) AASHTO M181 Type II –Aluminum Coated Steel, No. 9 gage (coated wire diameter), coated at the rate of 0.40 oz./ft².
   (3) AASHTO M181 Type IV– Polyvinyl Chloride (PVC) Coated Steel, No. 9 guage (coated core wire diameter), core wire–zinc coated steel. PVC coating: M181 Class A (either extruded or extruded and bonded) or Class B (bonded). See table right. Unless the plans call for M181 standard colors medium green, dark green or black the coating color shall be soft gray matching that of No. 36622 of Federal Standard 595a.

   E. Tension wire options:

   (1) Steel wire No. 7 gage zinc galvanized at the rate of 1.2 oz./ft².: AASHTO M181.
   (2) Aluminum alloy wire with a diameter of 0.1875" or larger conforming to the requirements of ASTM B211, Alloy 5056 Temper H38, or, Alclad Alloy 5056 Temper H192.
   (3) Aluminum coated steel wire No.7 gage coated at the rate of 0.040 oz./ft².: AASHTO M181.

   F. Tie wire and hog ring options:

   (1) Steel wire No.9 gage zinc galvanized at the rate of 1.2 oz./ft².
   (2) Aluminum alloy wire with a diameter of 0.1443" or larger conforming to the requirements of ASTM B211, Alloy 5056 Temper H38, or, Alclad Alloy 5056 Temper H192.
   (3) Aluminum coated steel wire No. 7 gage coated at the rate of 0.040 oz./ft².

6/28/2012 2:10:16 PM rd960rh C:\d\projects\standards\roadway\00800-s\00802-01.dgn

LAST REVISION	REVISION	DESCRIPTION:			INDEX NO.	SHEET NO.
07/01/09			FDOT DESIGN STANDARDS 2013	FENCE TYPE B	802	1

GENERAL NOTES CONTINUED

5. Unless a specific material is called for in the plans the Contractor may elect to use either a single type of material or a combination of material types from the component options listed in note 4. Combinations of optional materials are restricted as follows:
   (a) Only one fabric optional material will be permitted betweencorner and/or end post assemblies.
   (b) Only one line post optional material will be permitted between corner and/or end post assemblies.
   (c) Pull post assemblies shall be optional materials identical to either the linepost optional material or the corner and end post assembly optional material; but, pull post assemblies shall be the same optional material between any set of corner and/or end post assemblies.

6. Concrete for bases shall be Class NS concrete as specified in Section 347 of the Standard Specifications or a packaged, dry material meeting the requirements of a concrete under ASTM C-387. Materials for Class NS concrete may be proportioned by volume and/or by weight.

7. Line post shall be 8'-6" long (Standard). Line post are to be set in concrete as described above or by the following methods:
   (a) In accordance with special details and/or as specifically described in the contract plans and specifications.
   (b) In accordance with ASTM F567 Subsections 5.4 through 5.10 as approved by the Engineer. Line post installed in accordance with Section 5.8 shall be 9'-6" long.
   (c) Post mounted on concrete structure or solid rock shall be mounted in accordance with the base plate detail "Fence Mounting On Concrete Endwalls And Retaining Wall", Sheet 3; or, by embedment in accordance with ASTM F567 Subsection 5.5.

   End, pull and corner post assemblies shall be in concrete as detailed above for all soil conditions other than solid rock. Post within assemblies that are located on concrete structures or solid rock shall be set by base plate or by embedment as prescribed under (b) above for line post.

   Line and assembly post set in concrete bases shall be set an additional 3" in depth for each 1' of fence height greater than 6'.

8. Pull post shall be used at breaks in vertical grades of 15° or more, or at approximately 350' centers except that this maximum interval may be reduced by the Engineer on curves where the curve is greater than 3°.

9. Corner post are to be installed at all horizontal breaks in fence at 15° or more and as required at vertical breaks over 15° as determined by the Engineer.

10. When fence has an installed top of fabric height less than 6' knuckled top and bottom selvages shall be used unless the plans specifically identify locations for twisted selvage fabrics.

11. Unless sliding gates or special gates are called for in the plans, all gates shall be chain link swing gates meeting the material requirements described and as approved by the Engineer. Payment shall include the gates, single or double, all necessary hardware for installation and any additional length and/or size for posts at the opening. Gates shall be paid for under the contract unit price for Fence Gates, EA.

12. For construction purposes corner post assemblies shall consist of one corner post, two braces, two truss rods, and all necessary fittings and hardware as detailed. End post assemblies shall consist of one end post, one brace, one truss rod and all necessary fittings and hardware as detailed.

13. All post, tension wires, chain link fabric, tie wires, Class NS concrete, and all miscellaneous fittings and hardware to be included in the cost for Fencing, LF.

TYPE IV VINYL COATED FABRIC								
AASHTO M181 Table 4 Redefined As Follows								
Specified Diameter Of Metallic Coated Core Wire			Minimum Weight Of Zinc Coating		PVC Thickness Range			
					M181 Class A (Extruded Or Extruded And Bonded Coating)		M181 Class B (Bonded Coating)	
in.	mm	gage	oz./ft².	g/m²	in.	mm	in.	mm
0.148	3.77	9	0.30	92	0.015 to 0.025	0.38 to 0.64	0.006 to 0.010	0.15 to 0.25

DESIGN NOTE

This index details fencing that is constructed with chain link fabric 6' (nominal) in height and with specific ground clearance.
For fencing of different height or installation details, the fence shall be fully detailed in the Contract plans.

6/28/2012 2:10:18 PM rd960rh C:\d\projects\standards\roadway\00800-s\00802-02.dgn

LAST REVISION	REVISION	DESCRIPTION:		FDOT DESIGN STANDARDS 2013	FENCE TYPE B	INDEX NO.	SHEET NO.
07/01/09						802	2

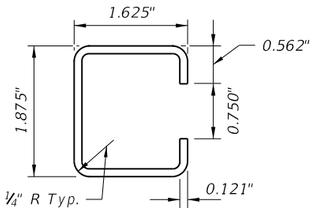

Galv. Wt. Per. Ft.= 2.34# ±5%
Yield PSI (Min.) 45,000

STANDARD WALL

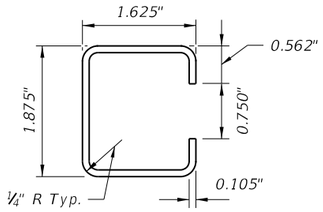

Galv. Wt. Per. Ft.= 1.85# ±5%
Yield PSI (Min.) 45,000

THINWALL

OPTIONAL "C" LINE POST

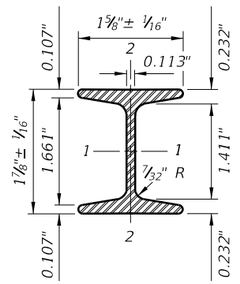

	STEEL	ALUMINUM
Area (Sq. In.)	724	724
Weight (Lb./Ft.)	2.72 ± 5% (Galv.)	0.91 ± 5%
Surface Area (SF/Ft.)	0.776	0.776
Tensile Strength (psi Min.)	80,000	30,000
Yielding Point (psi Min.)	48,000	25,000

	Axes 1–1	2–2	Axes 1–1	2–2
Moment Of Inertia	0.428	0.101	0.428	0.101
Section Modulus	0.456	0.124	0.456	0.124
Rad. Of Gyration	0.779	0.373	0.779	0.373

OPTIONAL 1⅞"x 1⅝" H-BEAM LINE POST

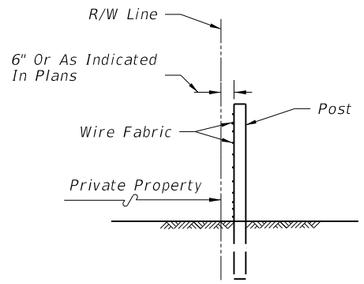

FENCE POSITION AT LOCATIONS WITHOUT FRONTAGE ROADS

(REFER TO DETAIL PLANS FOR FENCE POSITION AT LOCATIONS WITH FRONTAGE ROADS)

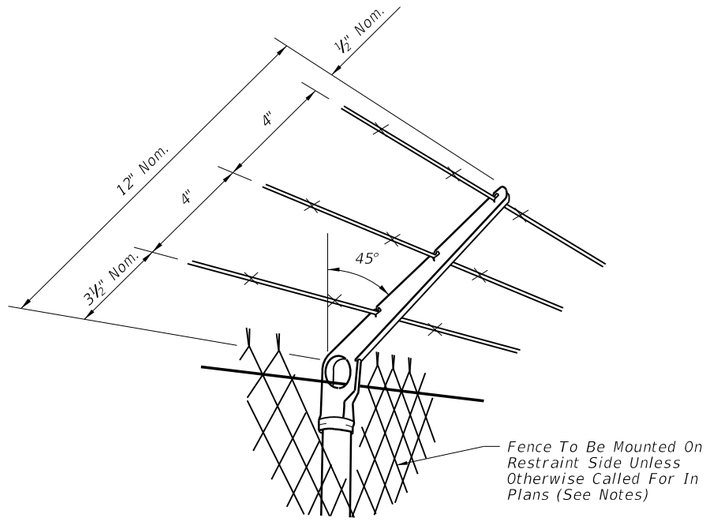

NOTES

Attachments to be used only when called for in the plans. Attachments to extend in direction of restraint. Unless otherwise called for in plans, direction of restraint will be as follows:

(a.) Outward on limited access right of way line.
(b.) Outward on controlled access right of way line.
(c.) Outward from utilities and hazardous facilities located within highway right of way.
(d.) Outward from lateral ditches, outfalls, retention basins, canals, borrow areas and similar support facilities.
(e.) Inward on pedestrian ways.

The cap-arm shall be designed to provide a drive fit over the top of posts and to exclude moisture in posts with tubular sections.

BARB WIRE ATTACHMENT

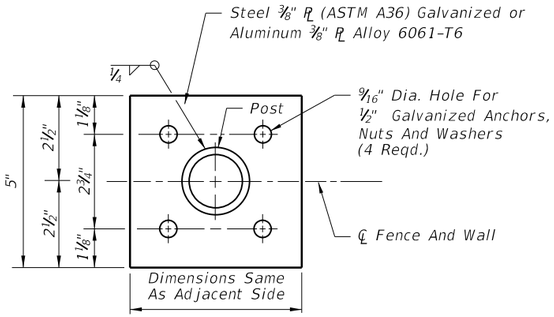

TOP VIEW
FOUR ANCHOR PLATE OPTION

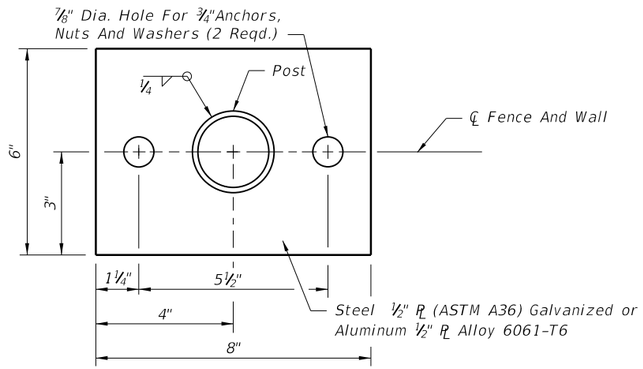

TOP VIEW
TWO ANCHOR PLATE OPTION

BASE PLATE AND ANCHOR NOTES:

1. Base plate identical for line, pull, end and corner posts and shall be considered an integral part of the respective posts for basis of payment.
2. Post to be plumbed by grout shim under base plate.
3. Anchors (Galvanized Steel):
   12" Cast In Place, 10½" Embedment: Headed Bolts, U-Bolts or Cluster Plates.
   8" Adhesive Anchors, 6" Min. Embedment.* *Adhesive anchors shall be headless anchor bolts set in drilled holes with an Adhesive Material System in accordance with Specification Sections 416 and 937; drilled holes shall be ⅛" larger in diameter than the anchor bolt.
   Expansion Bolts Not Permitted.

FENCE MOUNTING ON CONCRETE ENDWALL AND RETAINING WALLS

6/28/2012 2:10:20 PM rd960rh C:\d\projects\standards\roadway\00800-s\00802-03.dgn

LAST REVISION	REVISION	DESCRIPTION:		INDEX NO.	SHEET NO.
07/01/09			FDOT DESIGN STANDARDS 2013	802	3

FENCE TYPE B

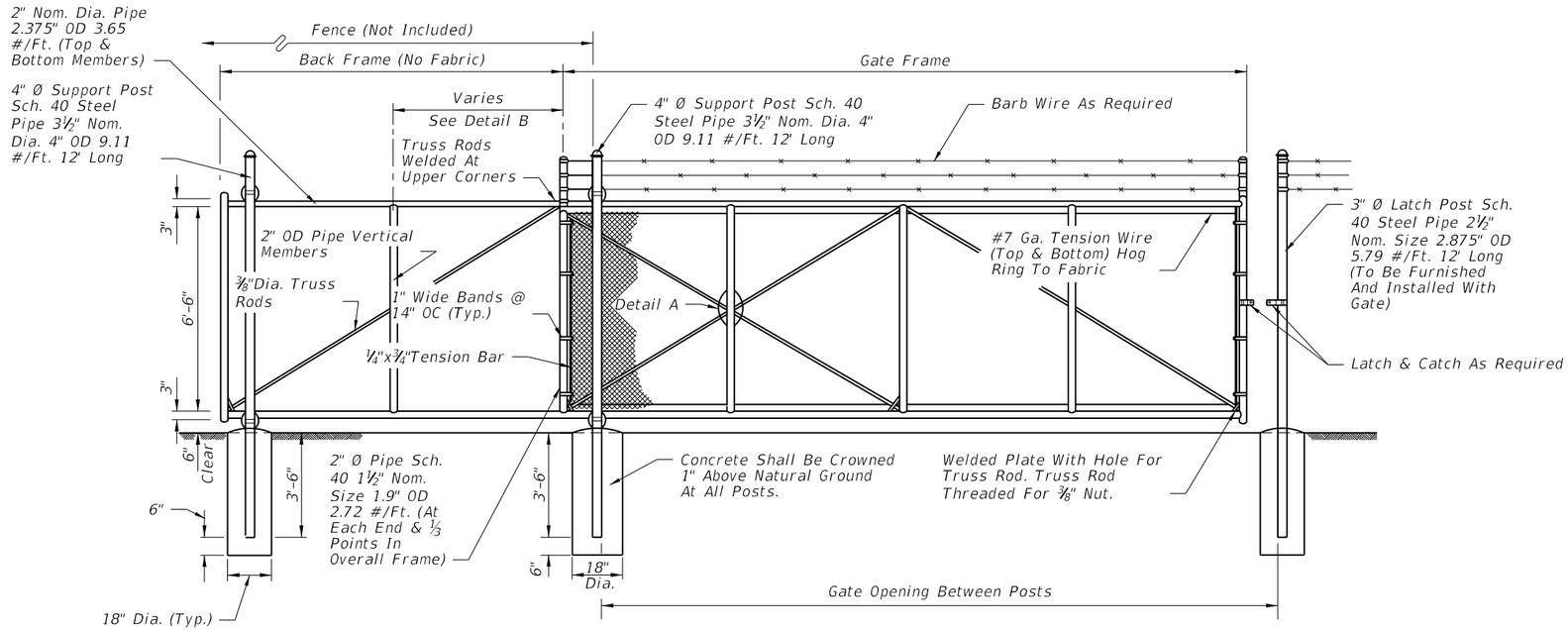

FRONT ELEVATION

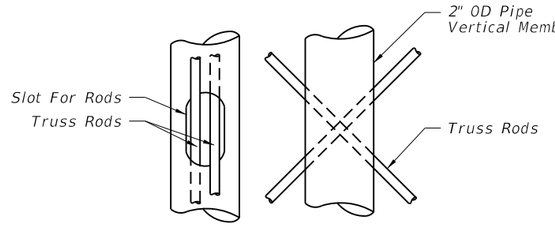

DETAIL A

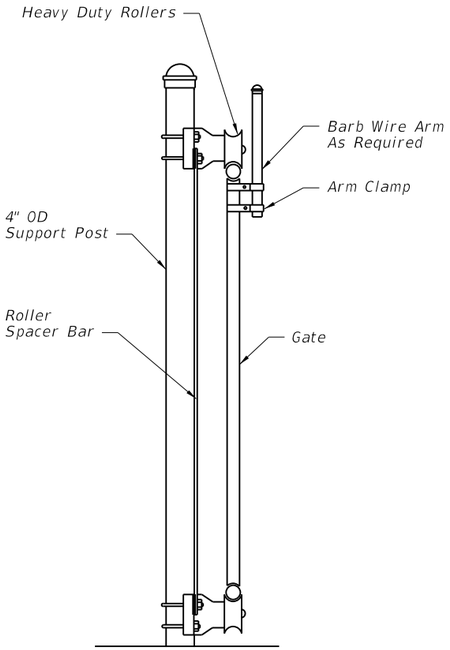

SUPPORT POST DETAIL

GATE OPENING	GATE FRAME	BACK FRAME
12'	12'-3"	6'
16'	16'-3"	8'
20'	20'-3"	10'
24'	24'-3"	12'

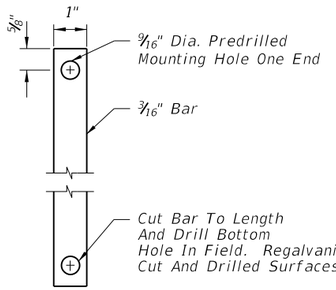

ROLLER SPACER BAR

GENERAL NOTES

1. Extruded, rolled or formed components that provide equal strength and stability may be used in lieu of the pipe components shown; and, internal rollers may be used in lieu of the external roller units shown.

   Gate components shall meet or exceed the protective coatings specified on Index No. 802.

2. Steel gate frame shall be fabricated prior to galvanizing, except that truss rods may be fabricated following frame galvanizing provided surfaces damaged during welding are galvanized in accordance with Section 24 of AASHTO M36; or, fabricated from pipe components with protective coating meeting the requirements of Index No. 802 that are tolerant of welding (low burn back), and a protective coating applied to the weld and damaged pipe surfaces that is equivalent to the protective coating of the fabricated pipe stock.

3. All fabric shall be knuckled top and bottom selvages.

4. Concrete for bases shall be either Class NS concrete as specified in Section 347 of the Standard Specifications or a packaged, dry material meeting the requirements of a concrete under ASTM C-387. Materials for Class NS concrete may be proportioned by volume and/or by weight.

5. Cost of all gate components shall be included in the contract unit price for Sliding Fence Gate (Cantilever), EA.

TYPICAL FRAME – 24' Opening

TYPICAL FRAME – 12', 16' & 20' Opening

DETAIL B

C:\d\projects\standards\roadway\00800-s\00803-01.dgn
rd960rh
2:10:22 PM
6/28/2012

LAST REVISION	REVISION	DESCRIPTION:				
01/01/12			FDOT DESIGN STANDARDS 2013	CANTILEVER SLIDE GATE TYPE B FENCE	INDEX NO. 803	SHEET NO. 1

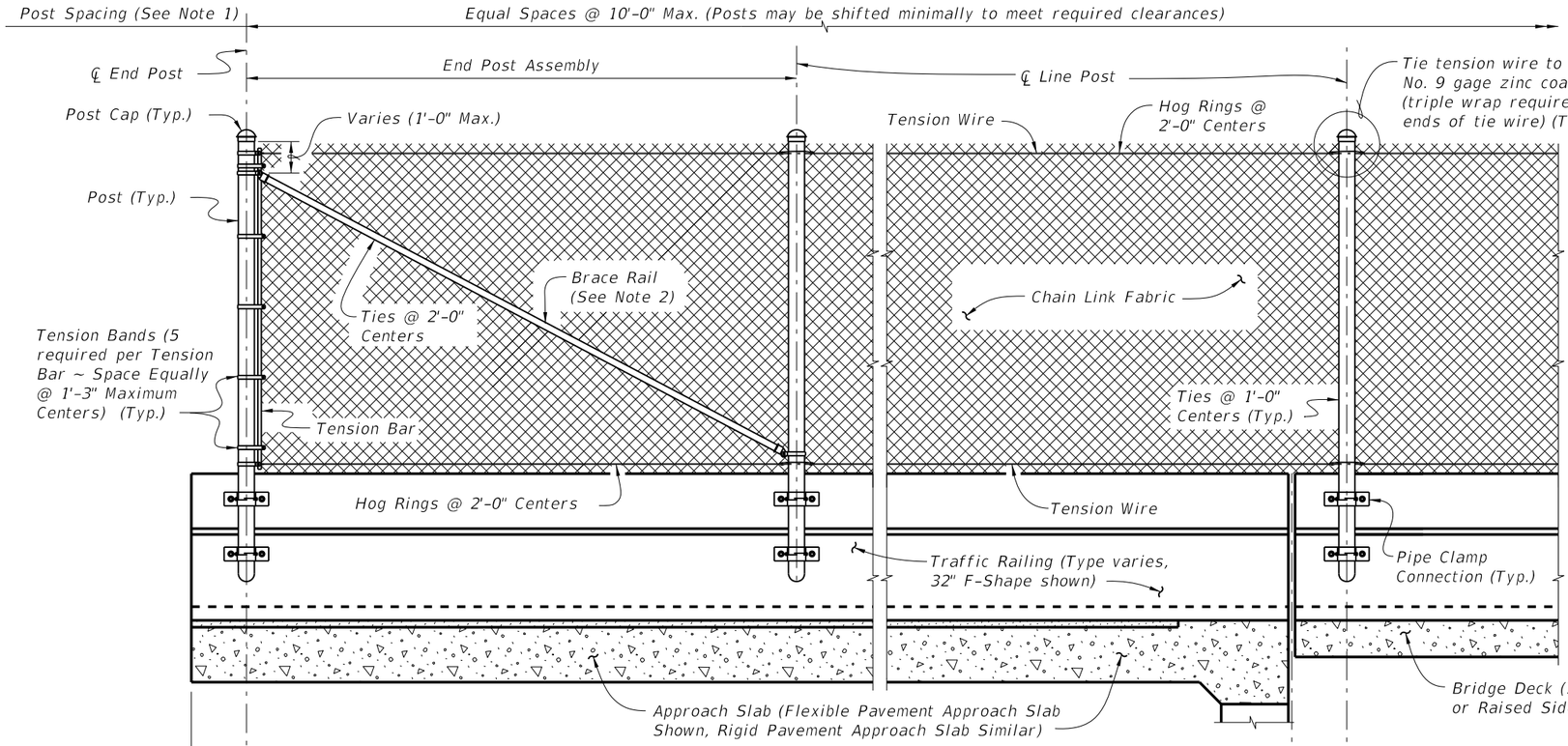

ELEVATION OF OUTSIDE FACE OF RAILING
(Traffic Railing Shown, Concrete Parapet Similar (See Note 3))

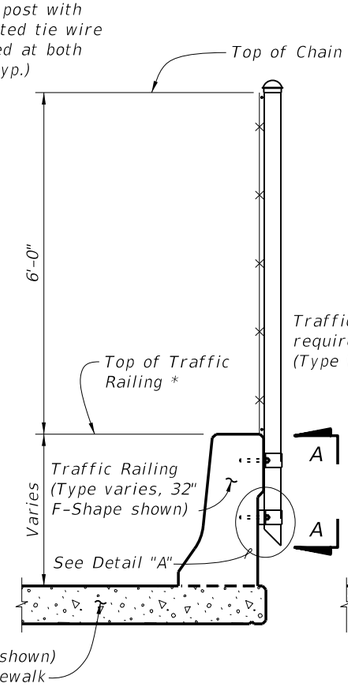

TYPICAL SECTION ON TRAFFIC RAILING BARRIER

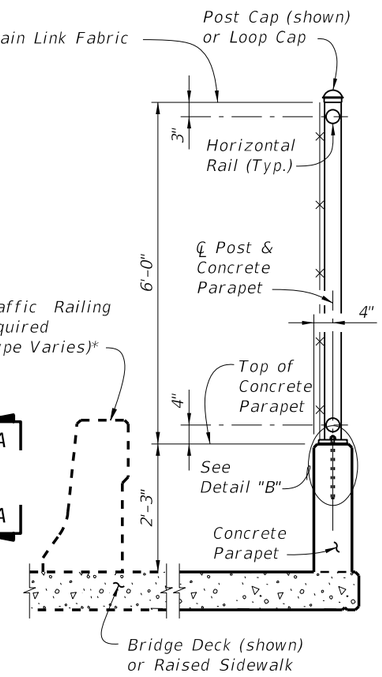

TYPICAL SECTION ON CONCRETE PARAPET

NOTES:
1. A Pull Post Assembly is required at maximum intervals of 500'-0". See Sheet Nos. 3 of 4.
2. Brace rails are only required for vertical fence installations on Traffic Railing.
3. Provide horizontal rails for vertical fence installations on Concrete Parapets in lieu of tension wire. Locate horizontal rails as shown in the Typical Section for Concrete Parapets at right.

* Fencing shall not anchor to the top of Traffic Railings.

FENCING NOTES

FENCE INSTALLATION:
Install posts plumb (within a tolerance of ± 1½"). Use shim plates as required to achieve plumb. The required quantity and thickness of shim plates will be determined in the field. Install chain link fence in accordance with ASTM F 567 as applicable.

TRAFFIC RAILING DETAILS:
See Superstructure Sheets for Traffic Railing Barrier details.

CONCRETE PARAPET DETAILS:
See Index No. 820 – Pedestrian/Bicycle Railing for Concrete Parapet details. Provide fencing in lieu of aluminum bullet railing as shown on Index No. 820.

LIMITS OF FENCING:
Limits of fencing are from begin of approach slab at Begin Bridge to end of approach slab at End Bridge, unless otherwise shown in the plans.

PAYMENT:
Payment will be made under Fencing, Type R. Payment includes posts, horizontal and expansion rails, brace rails and bands, rail ends, combination rail ends, boulevard clamps, chain link fabric, tension wire, ties, hog rings, tension bars and bands, post and loop caps, pipe clamps, base plates, anchor rods, bolts, nuts, washers, shim plates, spacers, neoprene pads, miscellaneous fence fittings and hardware and all incidental materials and labor required to complete installation of the fence.

CROSS REFERENCE:
For Table of Fence Components, Table of Post Attachment Components, View A-A and Detail "A" see Sheet No. 2.
For Pull Post Assembly Detail for Traffic Railing Barriers see Sheet No. 3.
For Pull Post Assembly Detail for Concrete Parapets and Detail "B" see Sheet No. 4.

C:\d\projects\standards\structures\2013book\00810-1of4.dgn
rd960rh
2:10:27 PM
6/28/2012

LAST REVISION	REVISION	DESCRIPTION:				
01/01/12			FDOT DESIGN STANDARDS 2013	BRIDGE FENCING (VERTICAL)	INDEX NO. 810	SHEET NO. 1

TABLE OF CHAIN LINK FENCE COMPONENTS

	COMPONENT	ASTM DESIGNATION	COMPONENT INFORMATION
Traffic Railing Barriers and Concrete Parapets	Posts	F 1083	Galvanized Steel Pipe – 3" NPS, Schedule 40 (3.500" Outside Diameter, 0.216" Wall Thickness)
	Chain Link Fabric (2" mesh with twisted top and knuckled bottom selvage)	A 392	Zinc Coated Steel – No. 9 gage (coated wire diameter), Class 2 Coating
		A 491	Aluminum Coated Steel – No. 9 gage (coated wire diameter)
		F 668	Polyvinyl Chloride (PVC) Coated Steel – No. 9 gage Zinc Coated Wire (metallic-coated core wire diameter) ~ Specify the color of the polymer coating in the General Notes
	Tie Wires	F 626	Zinc Coated Steel Wire – No. 9 gage
	Brace Bands	F 626	No. 12 Gage (Min. thickness) x ¾" (Min. width) Steel Bands (Beveled or Heavy)
	Tension Bars	F 626	3/16" (Min. thickness) x ¾" (Min. width) x 5'-10" (Min. height) Steel Bars
	Tension Bands	F 626	No. 14 Gage (Min. thickness) x ¾" (Min. width) Steel Bands
	Miscellaneous Fence Components	F 626	Zinc Coated Steel ~ (includes post or loop caps, horizontal and brace rail ends, combination rail ends, boulevard clamps and all other miscellaneous fittings & hardware)
Concrete Parapets	Horizontal Rails	F 1083	Galvanized Steel Pipe – 2½" NPS, Schedule 40 (2.875" Outside Diameter, 0.203" Wall Thickness)
	Expansion Rails	F 1083	Galvanized Steel Pipe – 2" NPS, Schedule 40 (2.375" Outside Diameter, 0.154" Wall Thickness)
	Bolts	A 307	¼" Ø x 4¼" Hex Head Bolts for Expansion Rail Connections
	Nuts	A 563	Hex Nuts for Expansion Rail Connections
	Washers	F 436	Flat Washers for Expansion Rail Connections
Traffic Railing Barriers	Tension Wire	A 824 & A 817	Type II (Zinc Coated Steel Wire) – No. 7 gage, Class 4 Coating
			Type I (Aluminum Coated Steel Wire) – No. 7 gage
	Hog Rings	F 626	Zinc Coated Steel Wire – No. 12 gage
	Brace Rails	F 1083	Galvanized Steel Pipe – 1¼" NPS, Schedule 40 (1.660" Outside Diameter, 0.140" Wall Thickness)

TABLE OF POST ATTACHMENT COMPONENTS

COMPONENT		ASTM DESIGNATION	COMPONENT INFORMATION
Pipe Clamps		A 36 or A 709 Grade 36	¼" Steel PL
Base Plates		A 36 or A 709 Grade 36	¾" Steel PL
Shim Plates		A 36 or A 709 Grade 36 or B 209 Alloy 6061-T6 or B 221 Alloy 6063-T5	Plate thicknesses as required; Holes in shim plates will be ¾" Ø
Spacers		–	1¼" PL for all materials
Pipe Clamp Connection	Adhesive Anchor Rods	F 1554 Grade 36	Fully threaded Headless Anchor Rods ~ ⅝" Ø x 6" (no spacer) or ⅝" Ø x 7¼" (with spacer)
	C-I-P Anchor Rods	F 1554 Grade 36	Hex Head Anchor Rods ~ ⅝" Ø x 6" (no spacer) or ⅝" Ø x 7¼" (with spacer)
Base Plate Connection	Adhesive Anchor Rods	F 1554 Grade 36	Fully threaded Headless Anchor Rods ~ ⅞" Ø x 14½"
	C-I-P Anchor Rods	F 1554 Grade 36	Hex Head Anchor Rods ~ ⅞" Ø x 14½"
Bolts		A 307	⅜" Ø x 4¾" Hex Head Bolts for Pipe Clamp Connections to Posts
Nuts		A 563	Hex Nuts for Pipe Clamp and Base Plate Connections
Washers		F 436	Flat Washers for Pipe Clamp and Base Plate Connections
Neoprene Pads		–	In accordance with Specification Section 932

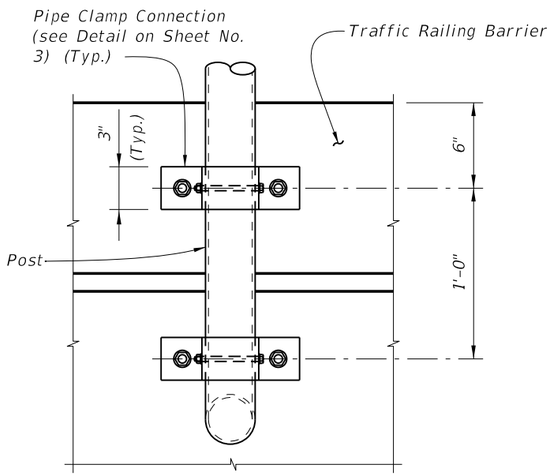

VIEW A-A

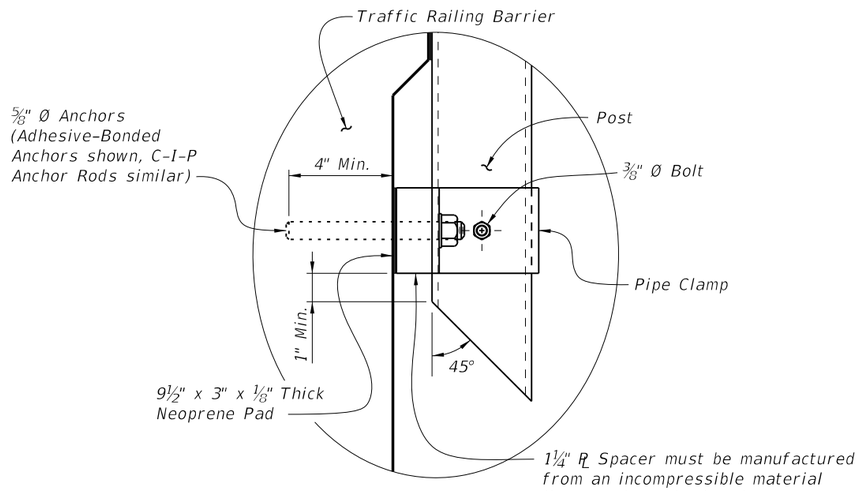

DETAIL "A"

POST ATTACHMENT NOTES

ANCHOR RODS, NUTS AND WASHERS:
After the nuts have been tightened, distort the Anchor Rod threads to prevent removal of the nuts. Coat distorted threads and exposed trimmed ends of anchors with a galvanizing compound in accordance with Specification Section 975.

COATINGS:
Hot-dip galvanize all Nuts, Washers, Bolts, C-I-P Anchor Rods, Adhesive Anchors and Fence Framework (Posts, Internal Sleeves, Shim Plates, Base Plates, Pipe Clamps and Spacers) in accordance with Specification Section 962. Hot-dip galvanize Fence Framework after fabrication.

ADHESIVE-BONDED ANCHORS AND DOWELS:
Adhesive Bonding Material Systems for Anchors and Dowels will comply with Specification Section 937 and be installed in accordance with Specification Section 416. Cutting of reinforcing steel is permitted for drilled hole installation.

WELDING:
All welding will be in accordance with the American Welding Society Structural Welding Code (Steel) ANSI/AWS D1.1 (current edition). Weld metal will be E60XX or E70XX. Nondestructive testing of welds is not required.

CROSS REFERENCE:
For location of View A-A and Detail "A" see Sheet No. 1.

C:\d\projects\standards\structures\2013book\00810-2of4.dgn
rd960rh
2:10:30 PM
6/28/2012

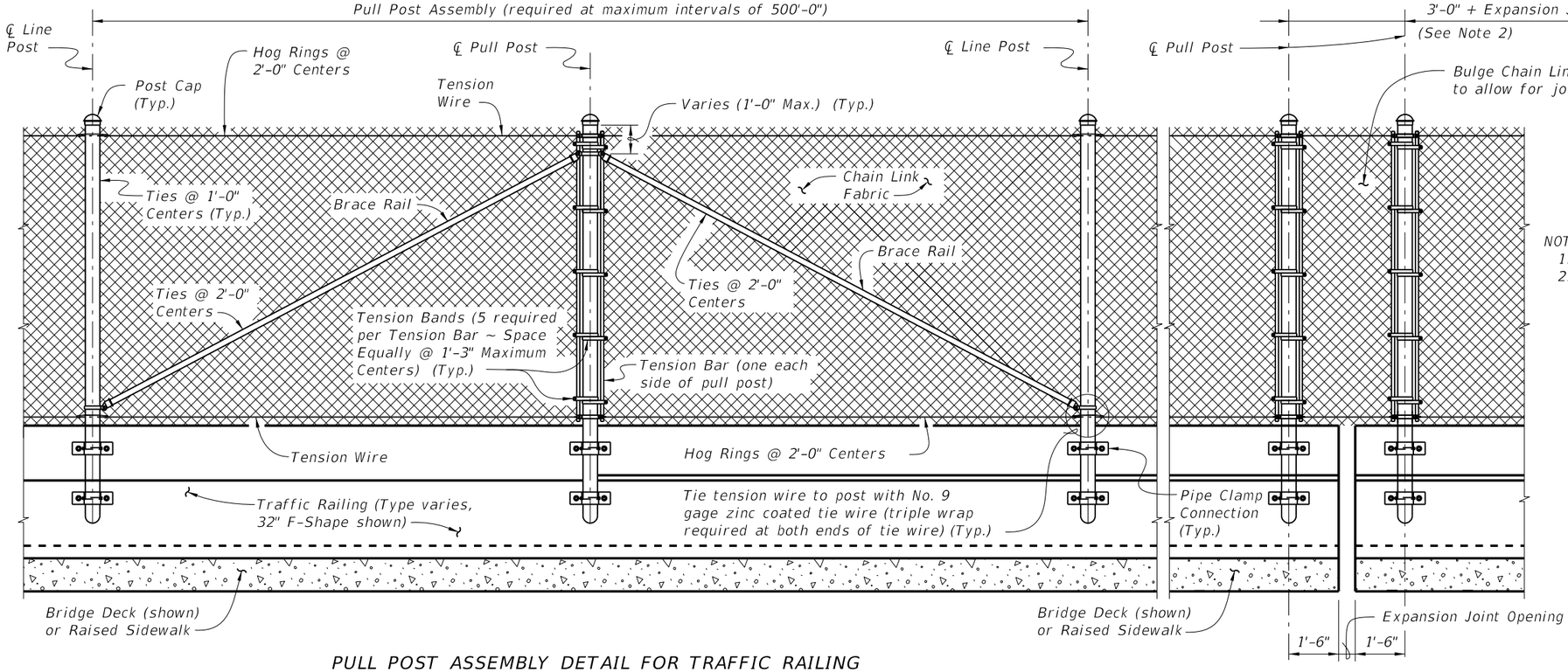

PULL POST ASSEMBLY DETAIL FOR TRAFFIC RAILING

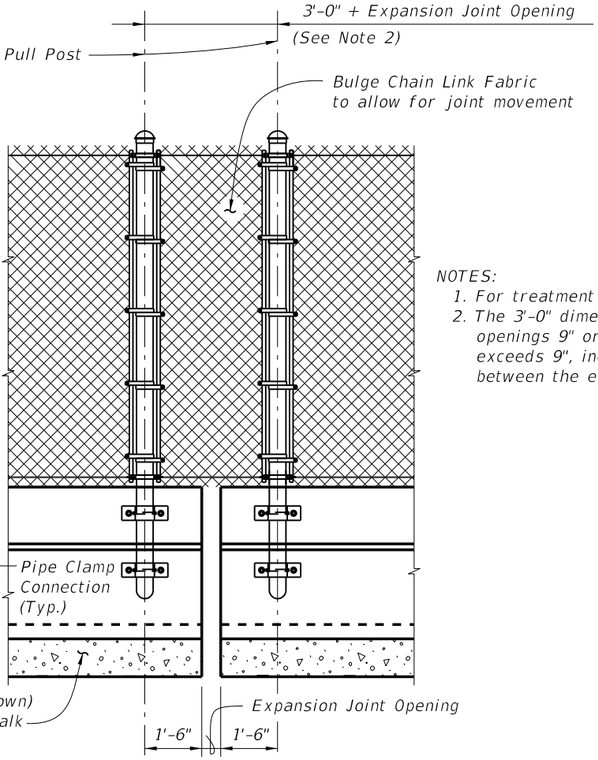

EXPANSION ASSEMBLY DETAIL

(Required only at expansion joint locations where total movement exceeds 6")

NOTES:

1. For treatment at bridge ends, see Sheet No. 1.
2. The 3'-0" dimension shown is for expansion joint openings 9" or less. If the expansion joint opening exceeds 9", increase this dimension by the difference between the expansion joint opening and 9".

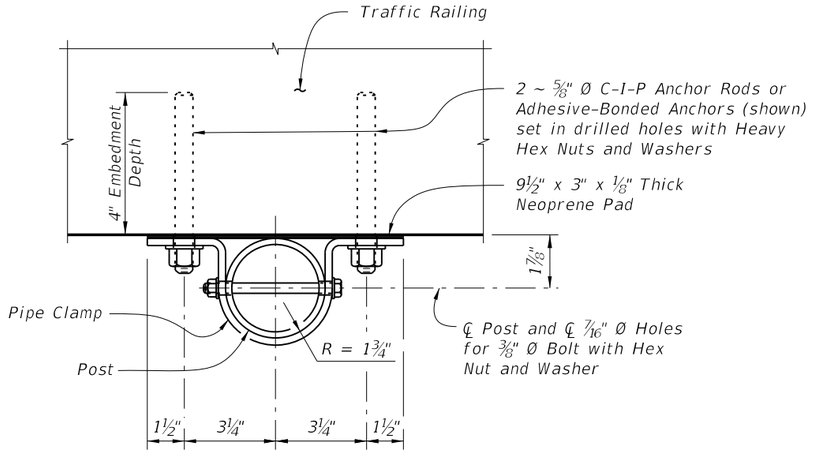

PIPE CLAMP CONNECTION DETAIL
(Connection without spacer shown, Connection with spacer similar)

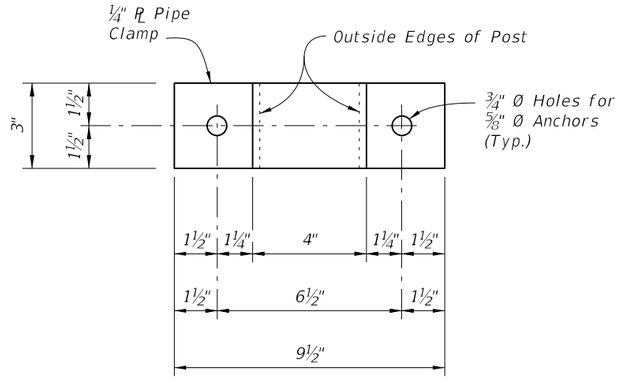

PIPE CLAMP DETAIL

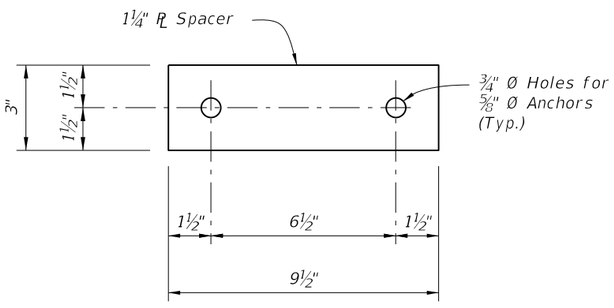

SPACER DETAIL

(Must be manufactured from an incompressible material (i.e., steel or aluminum))

6/28/2012 2:10:32 PM rd960rh C:\d\projects\standards\structures\2013book\00810-3of4.dgn

LAST REVISION	REVISION	DESCRIPTION:			INDEX NO.	SHEET NO.
01/01/11			FDOT DESIGN STANDARDS 2013	BRIDGE FENCING (VERTICAL)	810	3

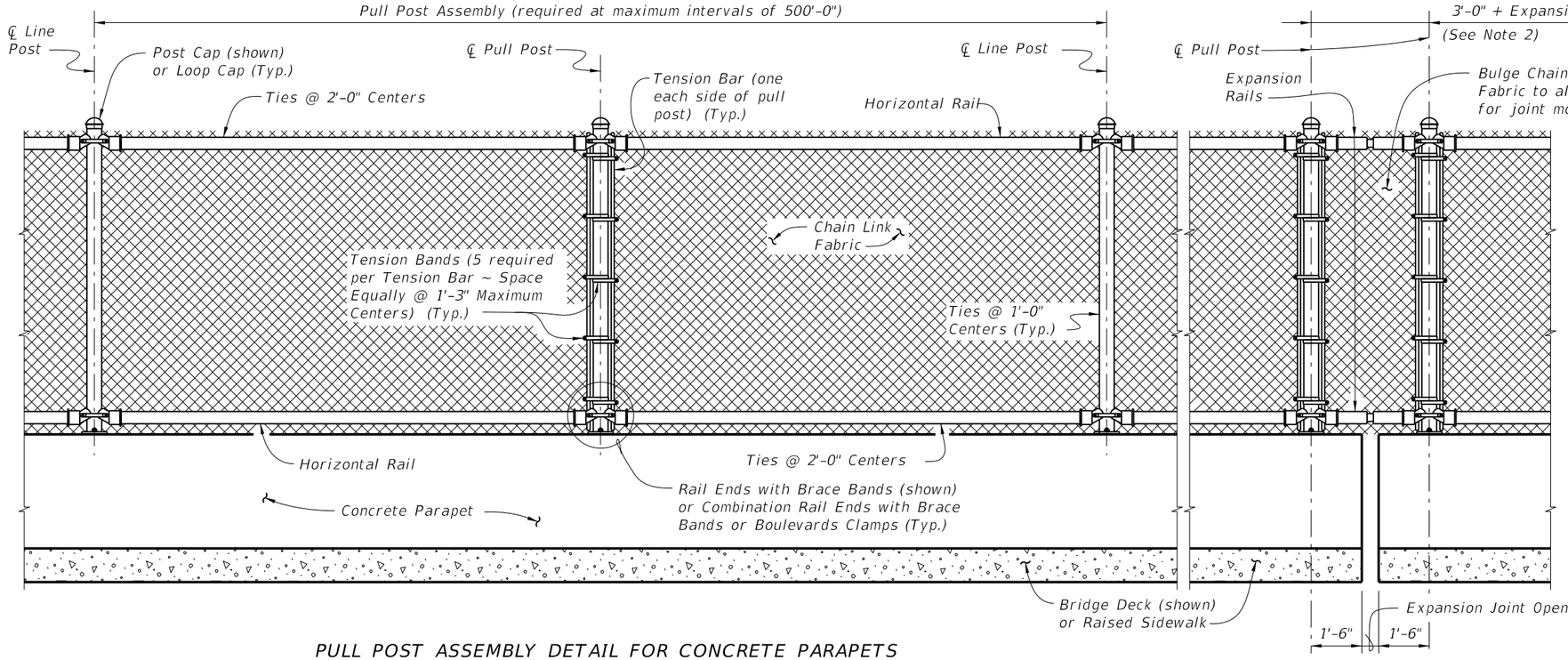

PULL POST ASSEMBLY DETAIL FOR CONCRETE PARAPETS

EXPANSION ASSEMBLY DETAIL

(Required only at expansion joint locations where total movement exceeds 6")

NOTES:

1. For treatment at bridge ends, see Sheet No. 1.
2. The 3'-0" dimension shown is for expansion joint openings 9" or less. If the expansion joint opening exceeds 9", increase this dimension by the difference between the expansion joint opening and 9".
3. This Dimension is the expansion joint opening plus 1/4". Expansion rails are required at expansion joint locations where the total movement exceeds 1", but is less than or equal to 6". Expansion rails are part of expansion assemblies when the total movement exceeds 6". Install expansion rails midway between the fence posts spanning the expansion joint.
4. Install nuts for expansion rails finger-tight. Nuts will fully engage bolts with a minimum of one bolt thread extending beyond the nuts. Distort the first thread on the outside of the nut to prevent loosening.

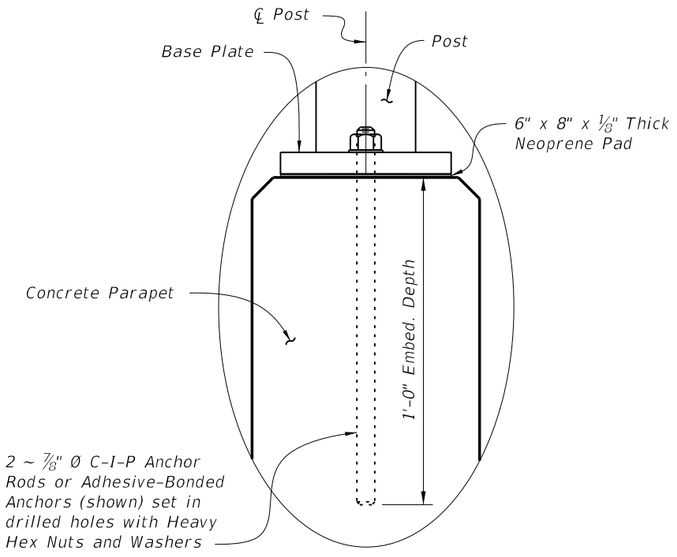

DETAIL "B"

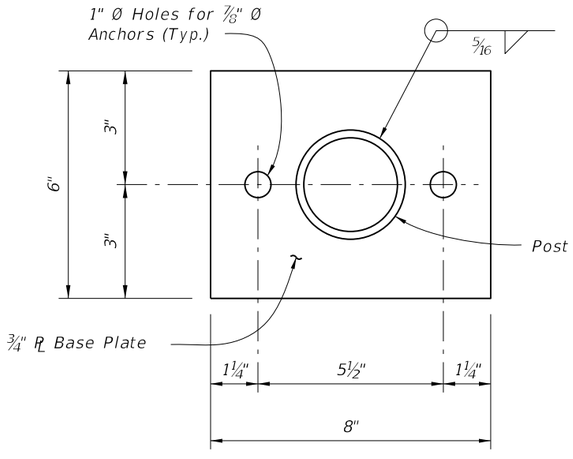

BASE PLATE DETAIL

CROSS REFERENCE:
For location of Detail "B" see Sheet No. 1.

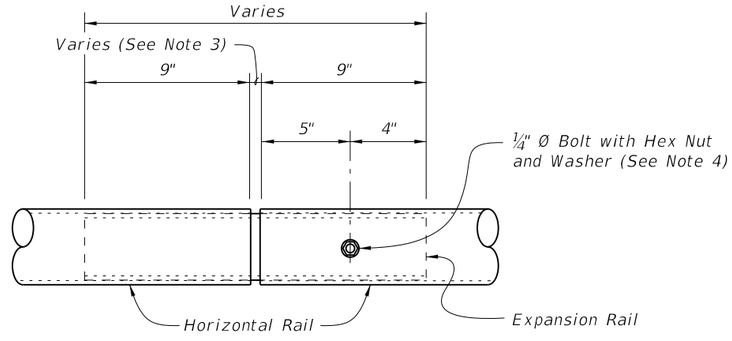

EXPANSION RAIL DETAIL

6/28/2012 2:10:35 PM rd960rh C:\d\projects\standards\structures\2013book\00810-4of4.dgn

LAST REVISION	REVISION	DESCRIPTION:				
07/01/05			FDOT DESIGN STANDARDS 2013	BRIDGE FENCING (VERTICAL)	INDEX NO. 810	SHEET NO. 4

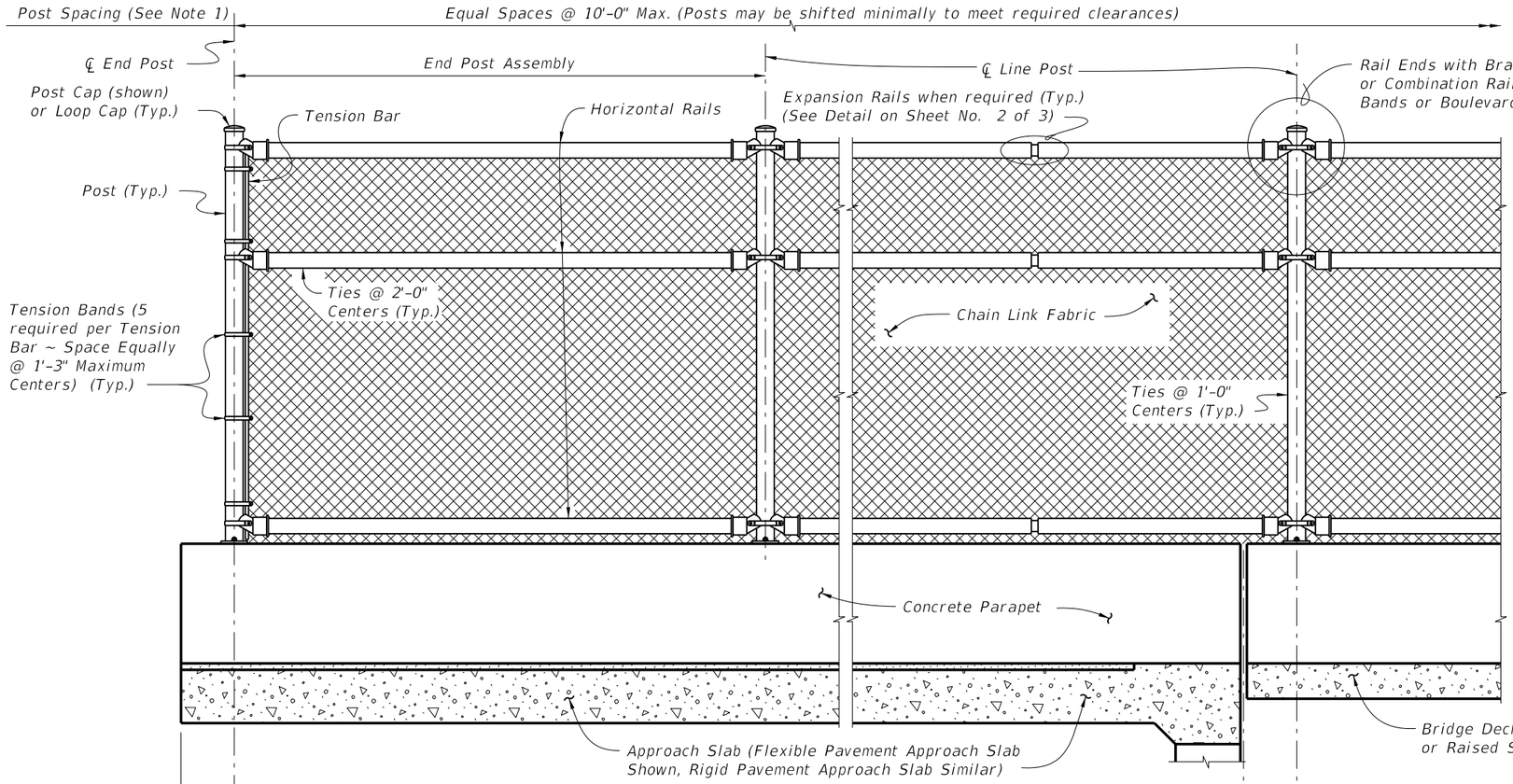

ELEVATION OF OUTSIDE FACE OF PARAPET

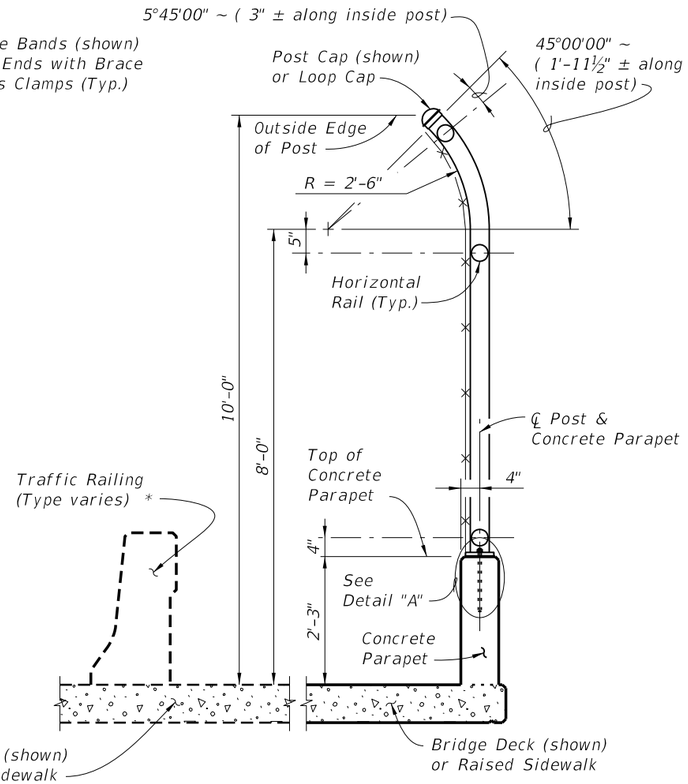

TYPICAL SECTION

* Fencing shall not anchor to the top of Traffic Railings.

NOTES:

1. A Pull Post Assembly is required at maximum intervals of 500'-0". See Sheet No. 2 of 3.

FENCING NOTES

FENCE APPLICATION:
This bridge fence can only be used on sidewalk installations separated from traffic by a traffic railing.

FENCE INSTALLATION:
Install posts plumb (within a tolerance of ± 1½"). Use shim plates as required to achieve plumb. The required quantity and thickness of shim plates will be determined in the field. Install chain link fence in accordance with ASTM F 567 as applicable.

CONCRETE PARAPET DETAILS:
See Index No. 820 – Pedestrian/Bicycle Bullet Railing for Concrete Parapet details. Provide fencing in lieu of aluminum bullet railing as shown on Index No. 820.

LIMITS OF FENCING:
Limits of fencing are from begin of approach slab at Begin Bridge to end of approach slab at End Bridge, unless otherwise shown in the plans.

PAYMENT:
Payment will be made under Fencing, Type R. Payment includes posts, horizontal and expansion rails, brace bands, rail ends, combination rail ends, boulevard clamps, chain link fabric, ties, tension bars and bands, post and loop caps, base plates, anchor rods, bolts, nuts, washers, shim plates, neoprene pads, miscellaneous fence fittings and hardware and all incidental materials and labor required to complete installation of the fence.

CROSS REFERENCE:
For Table of Fence Components and Pull Post Assembly Detail see Sheet No. 2 of 3.
For Table of Post Attachment Components and Detail "A" see Sheet No. 3 of 3.

6/28/2012 2:10:37 PM rd960rh C:\d\projects\standards\structures\2013book\00811-1of3.dgn

LAST REVISION	REVISION	DESCRIPTION:				
01/01/12			FDOT DESIGN STANDARDS 2013	BRIDGE FENCING (CURVED TOP)	INDEX NO. 811	SHEET NO. 1

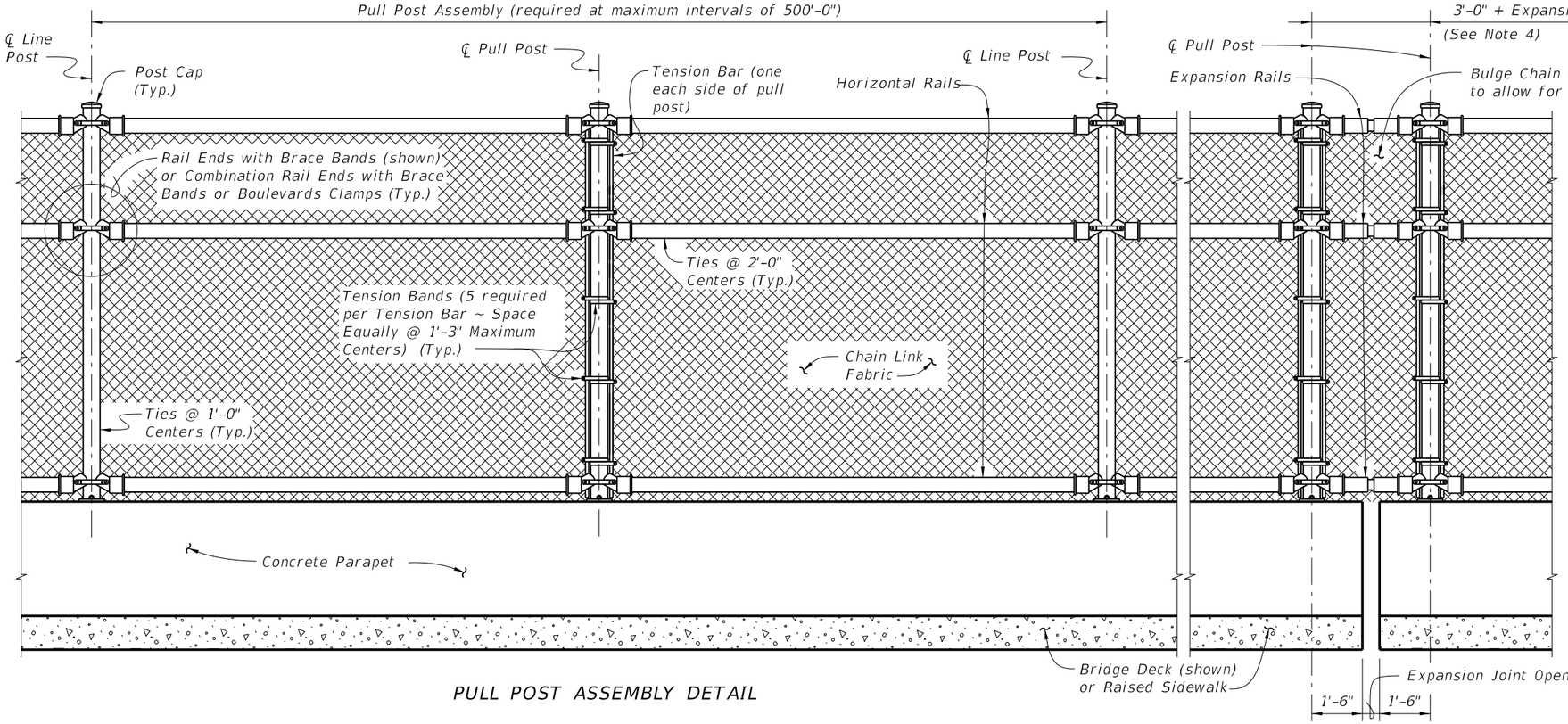

PULL POST ASSEMBLY DETAIL

NOTES:

1. This Dimension is the expansion joint opening plus ¼". Expansion rails are required at expansion joint locations where the total movement exceeds 1", but is less than or equal to 6". Expansion rails are part of expansion assemblies when the total movement exceeds 6". Install expansion rails midway between the fence posts spanning the expansion joint.
2. Install nuts for expansion rails finger-tight. Nuts will fully engage bolts with a minimum of one bolt thread extending beyond the nuts. Distort the first thread on the outside of the nut to prevent loosening.
3. For treatment at bridge ends, see Sheet No. 1 of 3.
4. The 3'-0" dimension shown is for expansion joint openings 9" or less. If the expansion joint opening exceeds 9", increase this dimension by the difference between the expansion joint opening and 9".

EXPANSION ASSEMBLY DETAIL

(Required only at expansion joint locations where total movement exceeds 6")

TABLE OF CHAIN LINK FENCE COMPONENTS		
COMPONENT	ASTM DESIGNATION	COMPONENT INFORMATION
Posts	F 1083	Galvanized Steel Pipe – 3½" NPS, Schedule 40 (4.000" Outside Diameter, 0.226" Wall Thickness)
Horizontal Rails	F 1083	Galvanized Steel Pipe – 3" NPS, Schedule 40 (3.500" Outside Diameter, 0.216" Wall Thickness)
Expansion Rails	F 1083	Galvanized Steel Pipe – 2½" NPS, Schedule 40 (2.875" Outside Diameter, 0.203" Wall Thickness)
Bolts	A 307	¼" Ø x 4¼" Hex Head Bolts for Expansion Rail Connections
Nuts	A 563	Hex Nuts for Expansion Rail Connections
Washers	F 436	Flat Washers for Expansion Rail Connections
Chain Link Fabric (2" mesh with twisted top and knuckled bottom selvage)	A 392	Zinc Coated Steel – No. 9 gage (coated wire diameter), Class 2 Coating
	A 491	Aluminum Coated Steel – No. 9 gage (coated wire diameter)
	F 668	Polyvinyl Chloride (PVC) Coated Steel – No. 9 gage Zinc Coated Wire (metallic-coated core wire diameter) ~ Specify the color of the polymer coating in the General Notes
Tie Wires	F 626	Zinc Coated Steel Wire – No. 9 gage
Brace Bands	F 626	No. 12 Gage (Min. thickness) x ¾" (Min. width) Steel Bands (Beveled or Heavy)
Tension Bars	F 626	3/16" (Min. thickness) x ¾" (Min. width) x Variable Height Steel Bars ~ Height = Post Length along inside Post – 2" Max.
Tension Bands	F 626	No. 14 Gage (Min. thickness) x ¾" (width) Steel Bands
Miscellaneous Fence Components	F 626	Zinc Coated Steel ~ (includes post or loop caps, horizontal and brace rail ends, combination rail ends, boulevard clamps and all other miscellaneous fittings and hardware)

LEGEND: NPS = Nominal Pipe Size

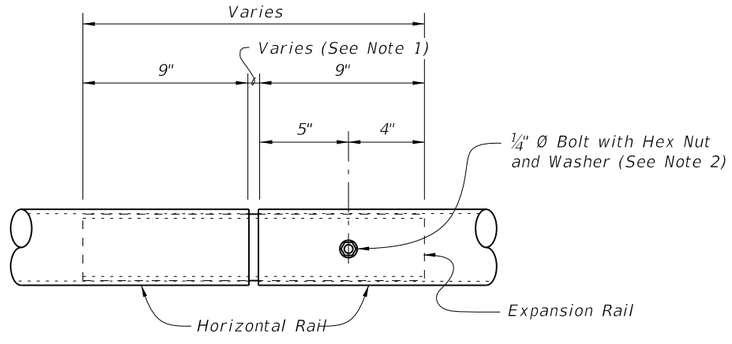

EXPANSION RAIL DETAIL

C:\d\projects\standards\structures\2013book\00811-2of3.dgn
rd960rh
2:10:40 PM
6/28/2012

LAST REVISION	REVISION	DESCRIPTION:			INDEX NO.	SHEET NO.
07/01/05			FDOT DESIGN STANDARDS 2013	BRIDGE FENCING (CURVED TOP)	811	2

TABLE OF POST ATTACHMENT COMPONENTS		
COMPONENT	ASTM DESIGNATION	COMPONENT INFORMATION
Base Plates	A 36 or A 709 Grade 36	¾" Steel ℄
Shim Plates	A 36 or A 709 Grade 36 or B 209 Alloy 6061-T6 or B 221 Alloy 6063-T5	Plate thicknesses as required, Holes in shim plates will be ¾" Ø
Adhesive Anchor Rods	F 1554 Grade 36	Fully threaded Headless Anchor Rods ~ ⅞" Ø x 14½"
C-I-P Anchor Rods	F 1554 Grade 36	Hex Head Anchor Rods ~ ⅞" Ø x 14½"
Nuts	A 563	Hex Nuts for Base Plate Connections
Washers	F 436	Flat Washers for Base Plate Connections
Neoprene Pads	-	In accordance with Specification Section 932

POST ATTACHMENT NOTES

ANCHOR RODS, NUTS AND WASHERS:
After the nuts have been tightened, distort the Anchor Rod threads to prevent removal of the nuts. Coat distorted threads and exposed trimmed ends of anchors with a galvanizing compound in accordance with Specification Section 975.

COATINGS:
Hot-dip galvanize all Nuts, Washers, Bolts, C-I-P Anchor Rods, Adhesive Anchors and Fence Framework (Posts, Internal Sleeves, Shim Plates and Base Plates) in accordance with Specification Section 962. Hot-dip galvanize Fence Framework after fabrication.

ADHESIVE-BONDED ANCHORS AND DOWELS:
Adhesive Bonding Material Systems for Anchors and Dowels will comply with Specification Section 937 and be installed in accordance with Specification Section 416. Cutting of reinforcing steel is permitted for drilled hole installation.

WELDING:
All welding will be in accordance with the American Welding Society Structural Welding Code (Steel) ANSI/AWS D1.1 (current edition). Weld metal will be E60XX or E70XX. Nondestructive testing of welds is not required.

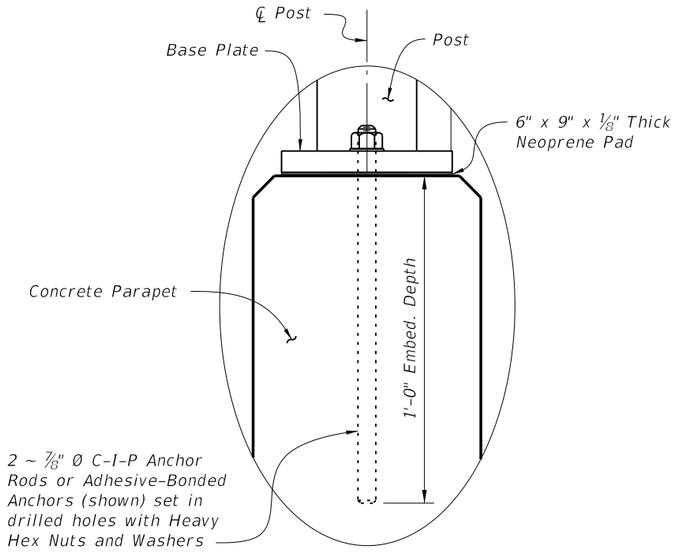

DETAIL "A"

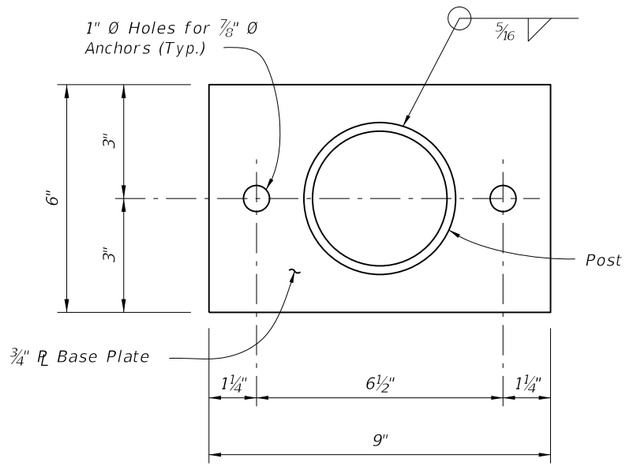

BASE PLATE DETAIL

CROSS REFERENCE:
For location of Detail "A" see Sheet No. 1 of 3.

6/28/2012 2:10:42 PM rd960rh C:\d\projects\standards\structures\2013book\00811-3of3.dgn

LAST REVISION	REVISION	DESCRIPTION:				
07/01/08			FDOT DESIGN STANDARDS 2013	BRIDGE FENCING (CURVED TOP)	INDEX NO. 811	SHEET NO. 3

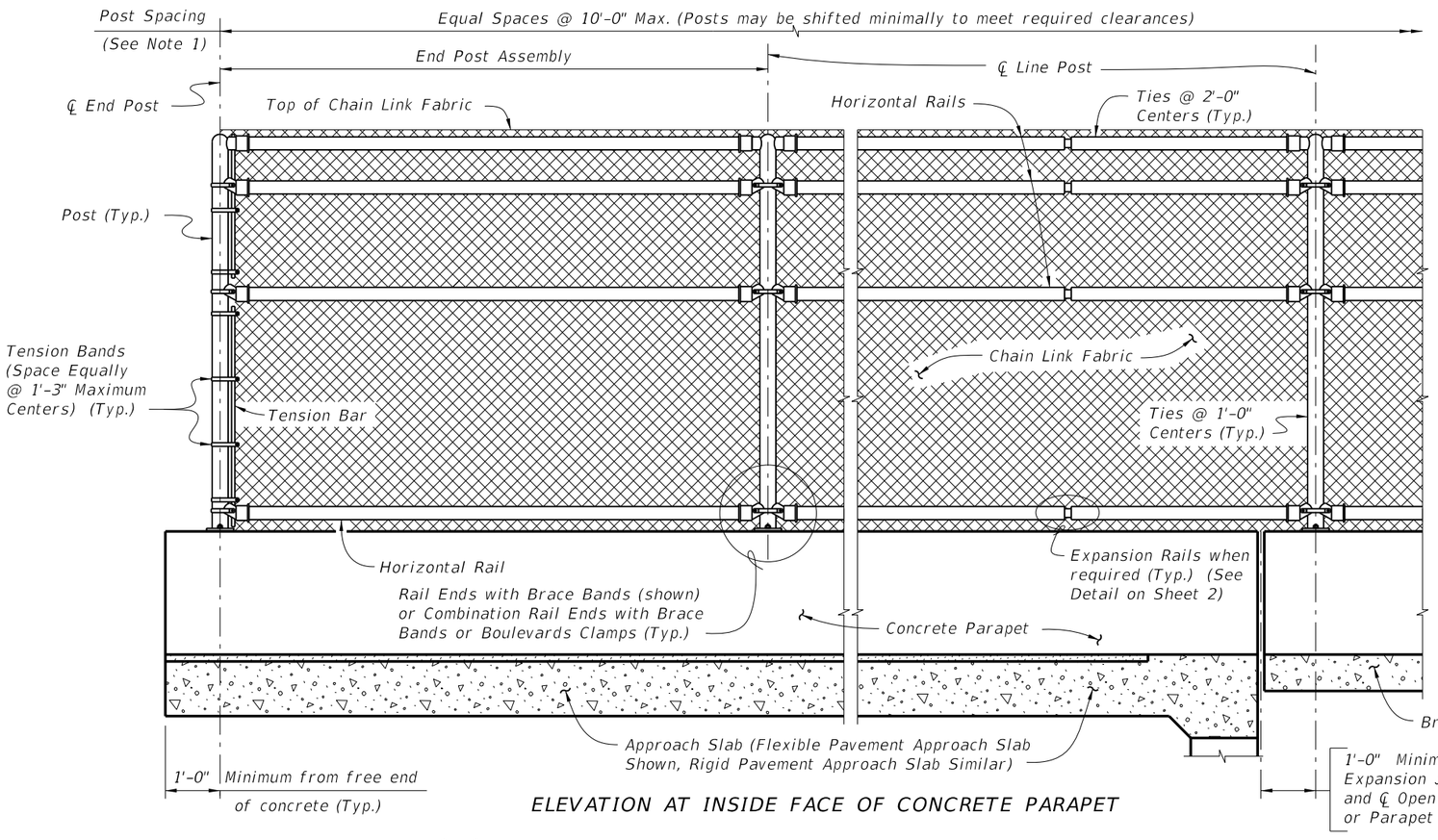

ELEVATION AT INSIDE FACE OF CONCRETE PARAPET

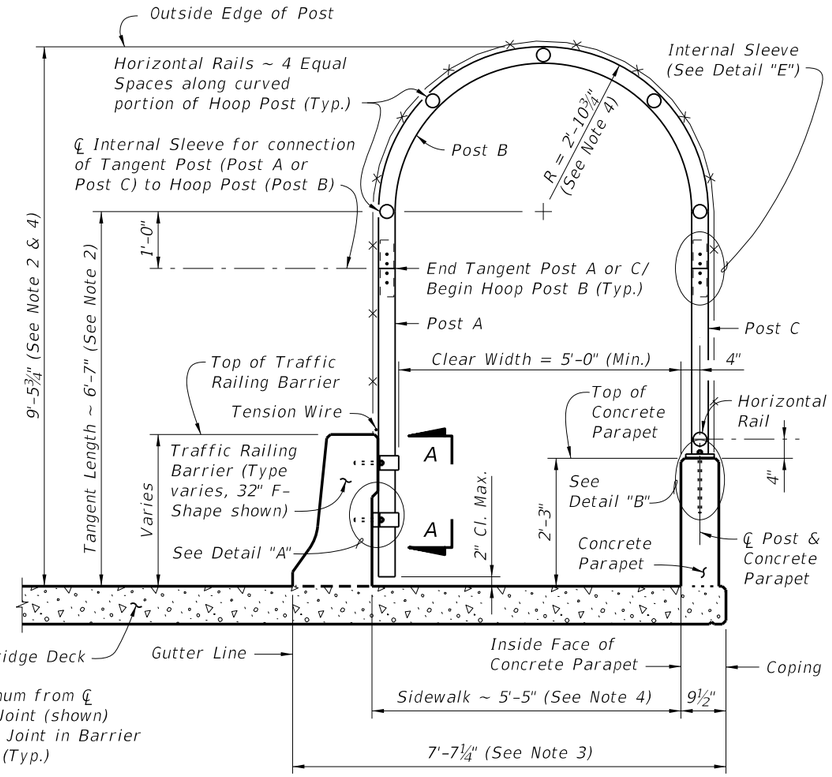

TYPICAL SECTION

NOTES:

1. A Pull Post Assembly is required at maximum intervals of 500'-0". See Sheet No. 3 of 4.
2. Dimension is measured along Inside Face of Concrete Parapet.
3. Dimension shown is for 32" F-Shape Traffic Railing Barriers as shown in Index No. 420. Adjust as required for other Traffic Railing Barriers and sidewalk widths.
4. For sidewalk clear widths greater than 5'-0", increase the radius and height of the curved portion of the Hoop Post at the rate of 6" for every one foot increase in sidewalk width.

FENCING NOTES

FENCE INSTALLATION:
Install posts plumb (within a tolerance of ± 1½"). Use shim plates as required to achieve plumb. The required quantity and thickness of shim plates will be determined in the field. Install chain link fence in accordance with ASTM F 567 as applicable.

TRAFFIC RAILING BARRIER DETAILS:
See Superstructure Sheets for Traffic Railing Barrier details.

CONCRETE PARAPET DETAILS:
See Index No. 820 – Pedestrian/Bicycle Railing for Concrete Parapet details. Provide fencing in lieu of aluminum bullet railing as shown on Index No. 820.

LIMITS OF FENCING:
Limits of fencing are from begin of approach slab at Begin Bridge to end of approach slab at End Bridge, unless otherwise shown in the plans.

PAYMENT:
Payment will be made under Fencing, Type R. Payment includes posts, horizontal and expansion rails, brace bands, rail ends, combination rail ends, boulevard clamps, chain link fabric, tension wire, ties, hog rings, tension bars and bands, pipe clamps, base plates, anchor rods, bolts, nuts, washers, shim plates, spacers, neoprene pads, miscellaneous fence fittings and hardware and all incidental materials and labor required to complete installation of the fence.

CROSS REFERENCE:
For Table of Fence Components and Table of Post Attachment Components see Sheet No. 2.
For Pull Post Assembly Detail, View A-A and Detail "A" see Sheet No. 3.
For Detail "B" and "E" see Sheet No. 4.

C:\d\projects\standards\structures\2013book\00812-1of4.dgn rd960rh 2:10:45 PM 6/28/2012

LAST REVISION	REVISION	DESCRIPTION:			INDEX NO.	SHEET NO.
07/01/07			FDOT DESIGN STANDARDS 2013	BRIDGE FENCING (ENCLOSED)	812	1

TABLE OF CHAIN LINK FENCE COMPONENTS

COMPONENT	ASTM DESIGNATION	COMPONENT INFORMATION
Posts	F 1083	Galvanized Steel Pipe – 3" NPS, Schedule 40 (3.500" Outside Diameter, 0.216" Wall Thickness)
Horizontal Rails and Internal Sleeves	F 1083	Galvanized Steel Pipe – 2½" NPS, Schedule 40 (2.875" Outside Diameter, 0.203" Wall Thickness)
Expansion Rails	F 1083	Galvanized Steel Pipe – 2" NPS, Schedule 40 (2.375" Outside Diameter, 0.154" Wall Thickness)
Chain Link Fabric (2" mesh with knuckled bottom selvages)	A 392	Zinc Coated Steel – No. 9 gage (coated wire diameter), Class 2 Coating
	A 491	Aluminum Coated Steel – No. 9 gage (coated wire diameter)
	F 668	Polyvinyl Chloride (PVC) Coated Steel – No. 9 gage Zinc Coated Wire (metallic-coated core wire diameter) ~ Specify the color of the polymer coating in the General Notes
Tension Wire	A 824 & A 817	Type II (Zinc Coated Steel Wire) – No. 7 gage, Class 4 Coating
		Type I (Aluminum Coated Steel Wire) – No. 7 gage
Tie Wires	F 626	Zinc Coated Steel Wire – No. 9 gage
Hog Rings	F 626	Zinc Coated Steel Wire – No. 12 gage
Brace Bands	F 626	No. 12 gage (Min. thickness) x ¾" (Min. width) Steel Bands (Beveled or Heavy)
Tension Bars	F 626	3/16" (Min. thickness) x ¾" (Min. width) x Variable Height Steel Bars ~ Height = Tangent or Hoop Length – Barrier or Parapet Height – 2" max.
Tension Bands	F 626	No. 14 gage (Min. thickness) x ¾" (Min. width) Steel Bands
Miscellaneous Fence Components	F 626	Zinc Coated Steel ~ (includes horizontal rail ends, combination rail ends, boulevard clamps and all other miscellaneous fittings and hardware)
Bolts	A 307	⅜" Ø x 4¼" Hex Head Bolts for Internal Sleeve connections ¼" Ø x 4¼" Hex Head Bolts for Expansion Rail connections
Nuts	A 563	Hex Nuts for Internal Sleeve and Expansion Rail connections
Washers	F 436	Flat Washers for Internal Sleeve and Expansion Rail connections

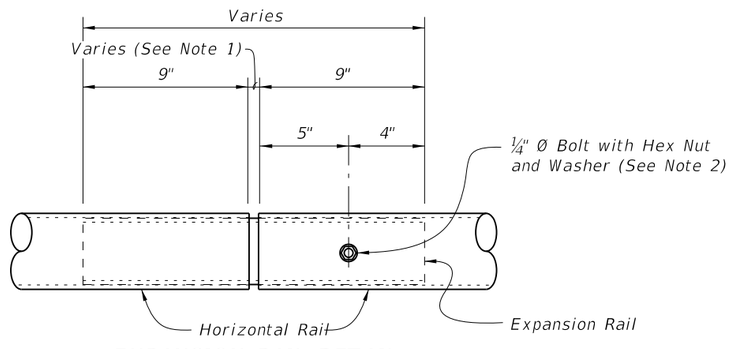

EXPANSION RAIL DETAIL

NOTES:

1. This Dimension is the expansion joint opening plus ¼". Expansion rails are required at expansion joint locations where the total movement exceeds 1", but is less than or equal to 6". Expansion rails are part of expansion assemblies when the total movement exceeds 6". Install expansion rails midway between the fence posts spanning the expansion joint.
2. Install nuts for expansion rails finger-tight. Nuts will fully engage bolts with a minimum of one bolt thread extending beyond the nuts. Distort the first thread on the outside of the nut to prevent loosening.

TABLE OF POST ATTACHMENT COMPONENTS

COMPONENT		ASTM DESIGNATION	COMPONENT INFORMATION
Pipe Clamps		A 36 or A 709 Grade 36	¼" Steel PL
Base Plates		A 36 or A 709 Grade 36	¾" Steel PL
Shim Plates		A 36 or A 709 Grade 36 or B 209 Alloy 6061-T6 or B 221 Alloy 6063-T5	Plate thicknesses as required; Holes in shim plates will be ¾" Ø
Spacers		–	1¼" PL for all materials
Pipe Clamp Connection	Adhesive Anchor Rods	F 1554 Grade 36	Fully threaded Headless Anchor Rods ~ ⅝" Ø x 6" (no spacer) or ⅝" Ø x 7¼" (with spacer)
	C-I-P Anchor Rods	F 1554 Grade 36	Hex Head Anchor Rods ~ ⅝" Ø x 6" (no spacer) or ⅝" Ø x 7¼" (with spacer)
Base Plate Connection	Adhesive Anchor Rods	F 1554 Grade 36	Fully threaded Headless Anchor Rods ~ ⅞" Ø x 14½"
	C-I-P Anchor Rods	F 1554 Grade 36	Hex Head Anchor Rods ~ ⅞" Ø x 14½"
Bolts		A 307	⅜" Ø x 4¾" Hex Head Bolts for Pipe Clamp Connections to Posts
Nuts		A 563	Hex Nuts for Pipe Clamp and Base Plate Connections
Washers		F 436	Flat Washers for Pipe Clamp and Base Plate Connections
Neoprene Pads		–	In accordance with Specification Section 932

POST ATTACHMENT NOTES

ANCHOR RODS, NUTS AND WASHERS:
After the nuts have been tightened, distort the Anchor Rod threads to prevent removal of the nuts. Coat distorted threads and exposed trimmed ends of anchors with a galvanizing compound in accordance with Specification Section 975.

COATINGS:
Hot-dip galvanize all Nuts, Washers, Bolts, C-I-P Anchor Rods, Adhesive Anchors and Fence Framework (Posts, Internal Sleeves, Shim Plates, Base Plates, Pipe Clamps and Spacers) in accordance with Specification Section 962. Hot-dip galvanize Fence Framework after fabrication.

ADHESIVE-BONDED ANCHORS AND DOWELS:
Adhesive Bonding Material Systems for Anchors and Dowels will comply with Specification Section 937 and be installed in accordance with Specification Section 416. Cutting of reinforcing steel is permitted for drilled hole installation.

WELDING:
All welding will be in accordance with the American Welding Society Structural Welding Code (Steel) ANSI/AWS D1.1 (current edition). Weld metal will be E60XX or E70XX. Nondestructive testing of welds is not required.

C:\d\projects\standards\structures\2013book\00812-2of4.dgn 6/28/2012 2:10:47 PM rd960rh

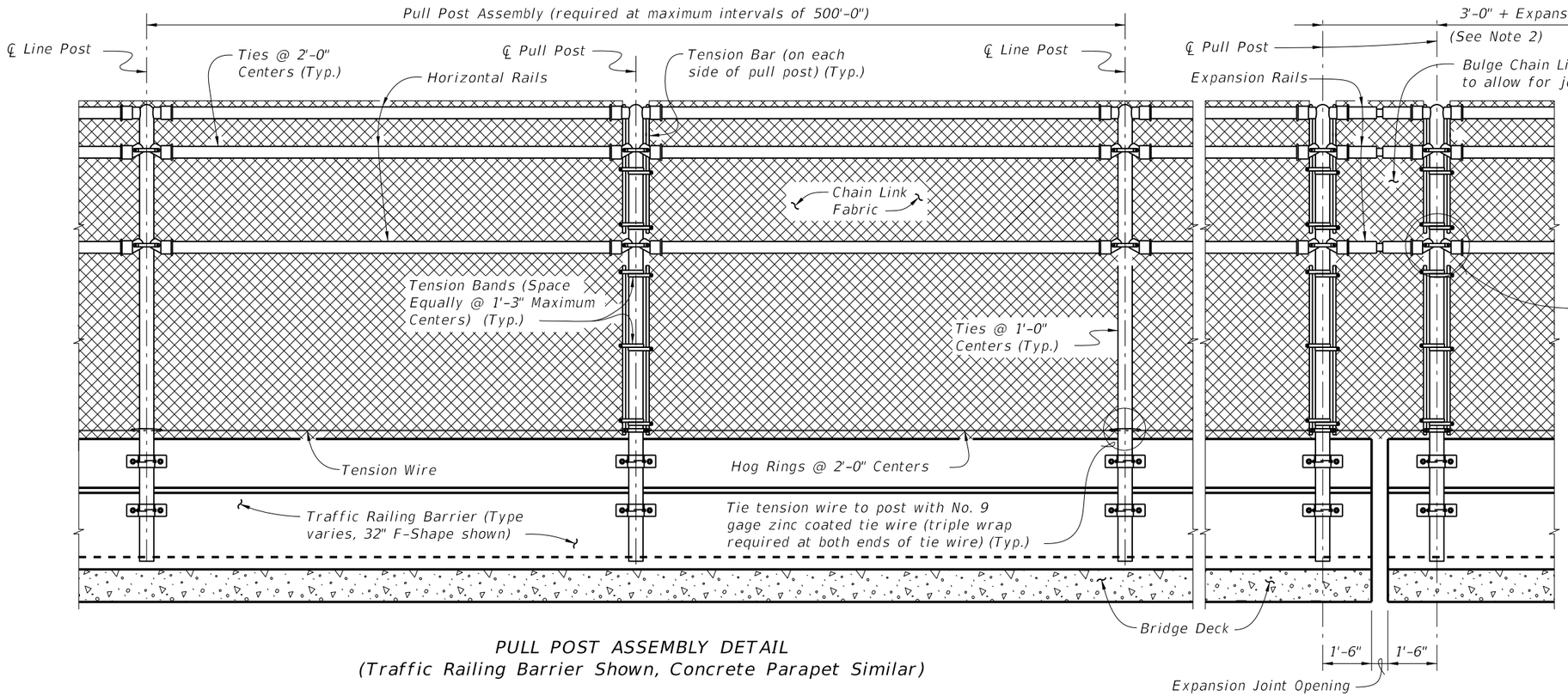

PULL POST ASSEMBLY DETAIL
(Traffic Railing Barrier Shown, Concrete Parapet Similar)

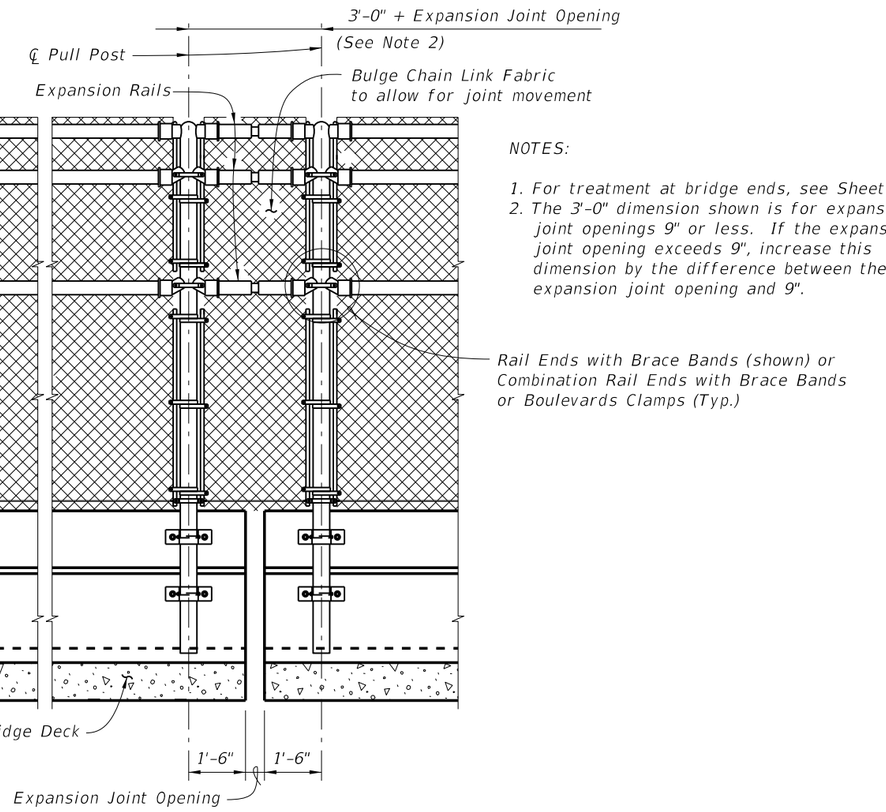

EXPANSION ASSEMBLY DETAIL
(Required only at expansion joint locations where total movement exceeds 6")

NOTES:

1. For treatment at bridge ends, see Sheet 1.
2. The 3'-0" dimension shown is for expansion joint openings 9" or less. If the expansion joint opening exceeds 9", increase this dimension by the difference between the expansion joint opening and 9".

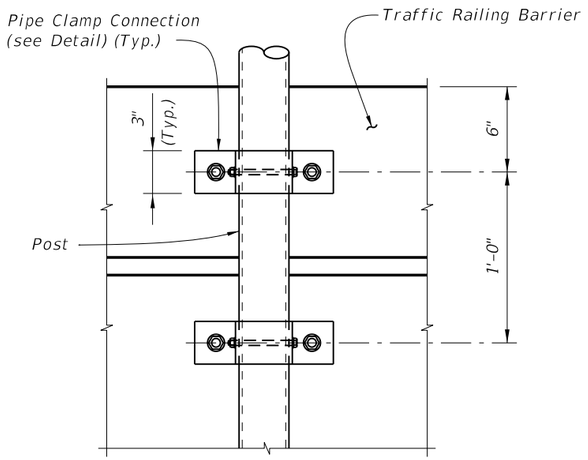

VIEW A-A

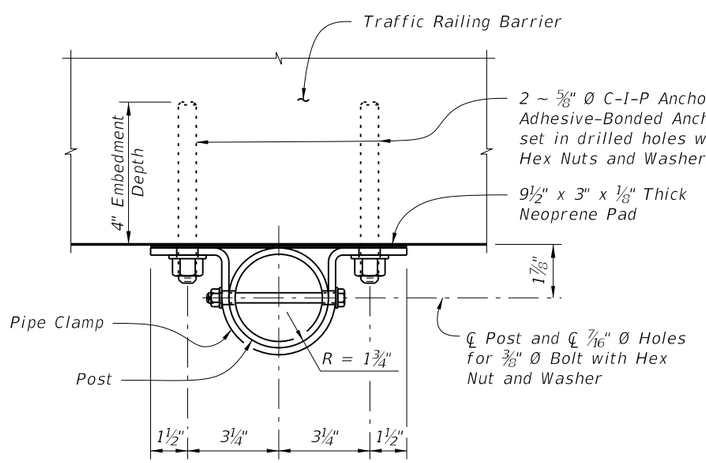

PIPE CLAMP CONNECTION DETAIL
(Connection without spacer shown, Connection with spacer similar)

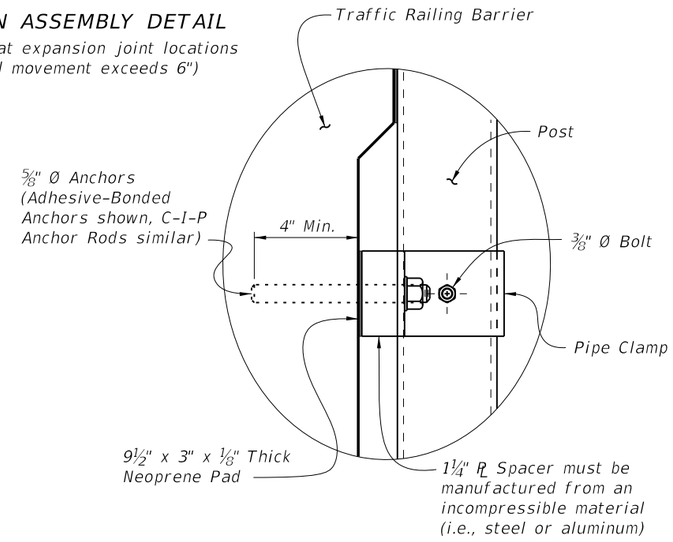

DETAIL "A"

CROSS REFERENCE:
For location of View A-A and Detail "A" see Sheet No. 1 of 4.

LAST REVISION	REVISION	DESCRIPTION:			INDEX NO.	SHEET NO.
01/01/12			FDOT DESIGN STANDARDS 2013	BRIDGE FENCING (ENCLOSED)	812	3

6/28/2012 2:10:50 PM rd960rh C:\d\projects\standards\structures\2013book\00812-3of4.dgn

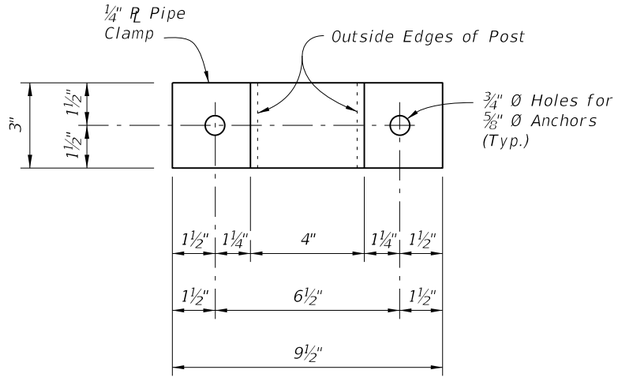

PIPE CLAMP DETAIL

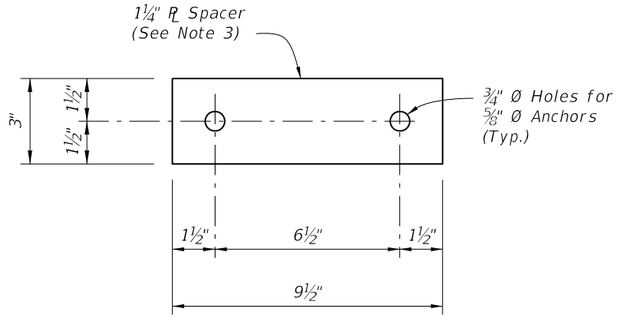

SPACER DETAIL

(Must be manufactured from an incompressible material (i.e., steel or aluminum))

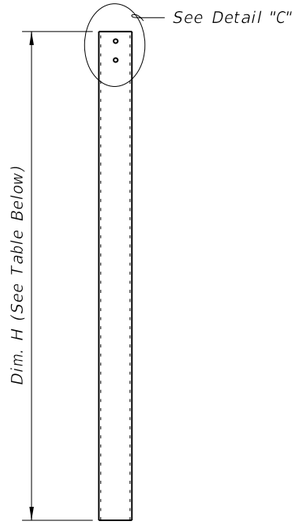

POST A DETAIL

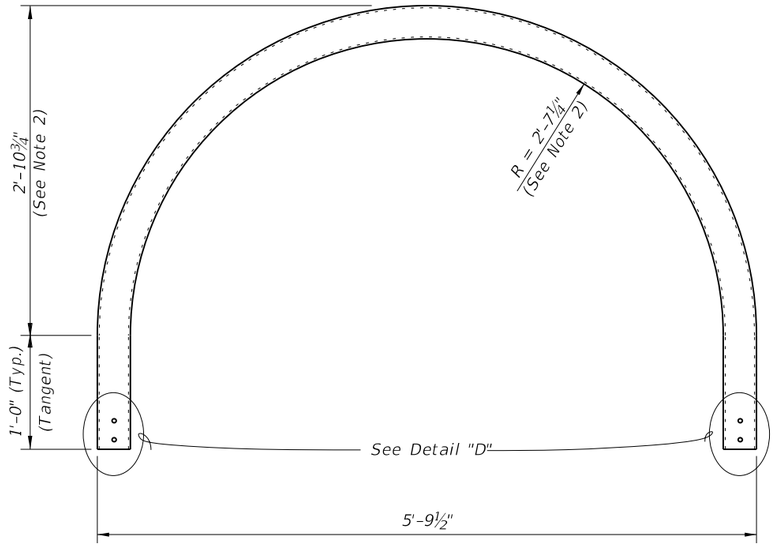

POST B DETAIL

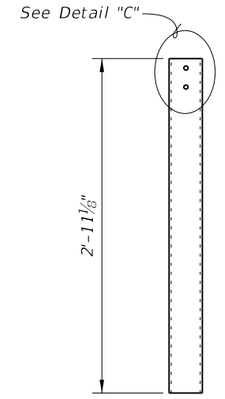

POST C DETAIL

SIDEWALK CROSS-SLOPE	DIM. H (See Note 1)
2% Left	5'-6¼"
2% Right	5'-3¾"

NOTES:

1. Values shown for Dim. H are for a 5'-0" clear sidewalk width. Adjust as required for clear sidewalk widths greater than 5'-0".
2. For clear sidewalk widths greater than 5'-0" increase radius and height by 6" for every one foot increase in sidewalk width.
3. Spacer plate thickness shown is for the 32" F-Shape Traffic Railing shown in Index No. 420. Adjust thickness as required for other Traffic Railings.

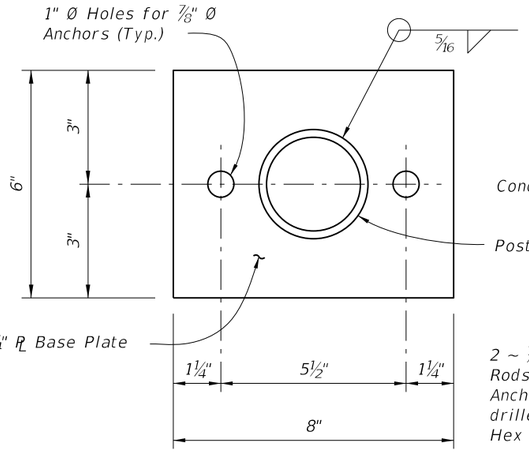

BASE PLATE DETAIL

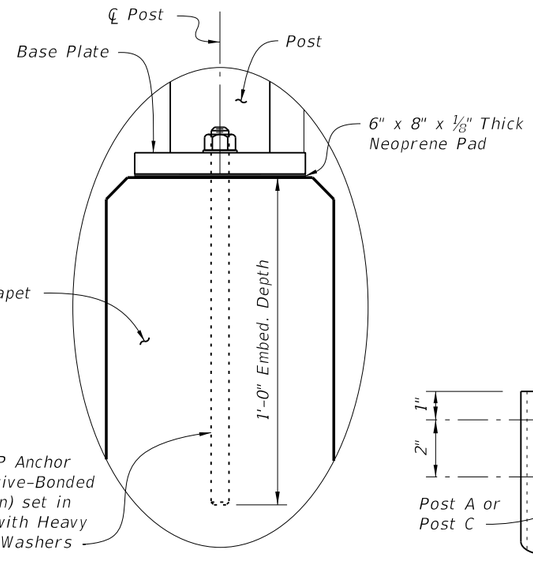

DETAIL "B"

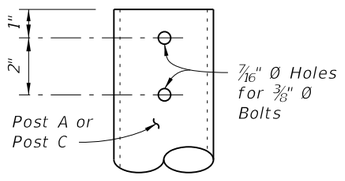

DETAIL "C"

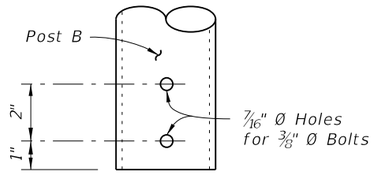

DETAIL "D"

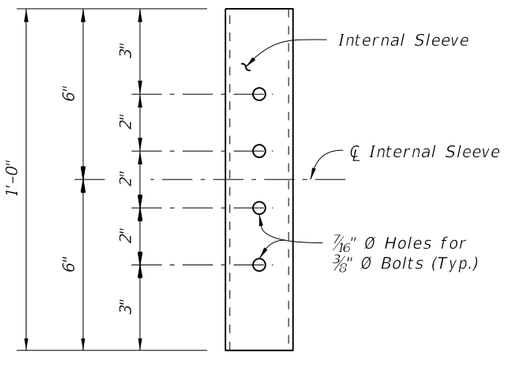

DETAIL "E"
(INTERNAL SLEEVE DETAIL)

CROSS REFERENCE:
For location of Details "B" and "E" see Sheet No. 1.

C:\d_projects\standards\structures\2013book\00812-4of4.dgn
rd960rh
2:10:52 PM
6/28/2012

LAST REVISION	REVISION	DESCRIPTION:	FDOT DESIGN STANDARDS 2013	BRIDGE FENCING (ENCLOSED)	INDEX NO.	SHEET NO.
01/01/06					812	4

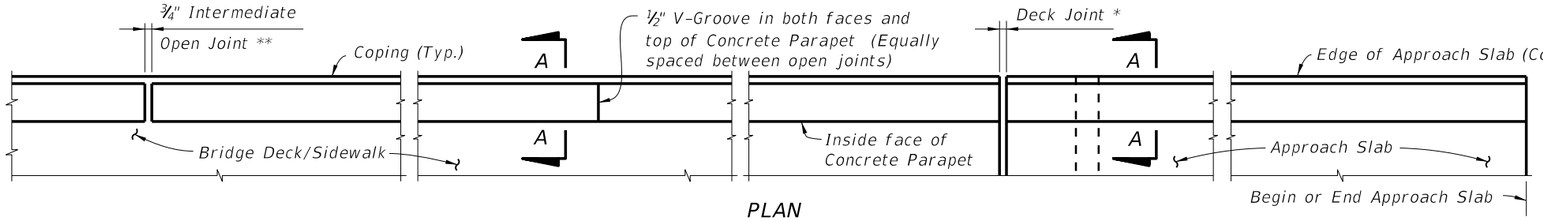

PLAN
(Rails, Posts & Reinforcing Steel not shown for clarity)

** ¾" Intermediate Open Joints shall be provided at locations coinciding with ¾" Joints for the Traffic Railing.

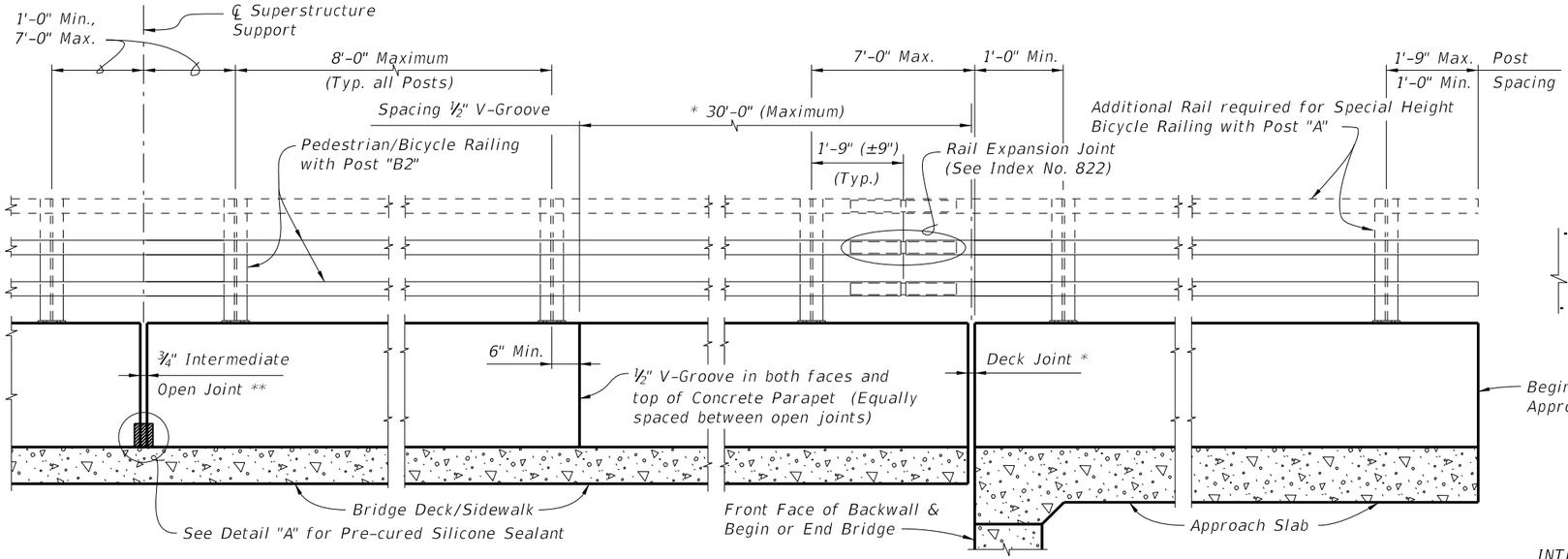

* See Structures Plans, Superstructure Sheets for actual dimensions and joint orientation. Open Parapet Joints at Deck Expansion Joint locations shall match the dimension of the Deck Joint. For treatment of Railings on skewed bridges see Index No. 420. Deck Joint at Begin Bridge or End Bridge shown. Deck Joint at ℄ Pier or Intermediate Bent similar.

ELEVATION OF INSIDE FACE OF RAILING
(Reinforcing Steel not shown for clarity)
(Aluminum Bullet Railing Shown, For Bridge Fencing see Index Nos. 810, 811 or 812)

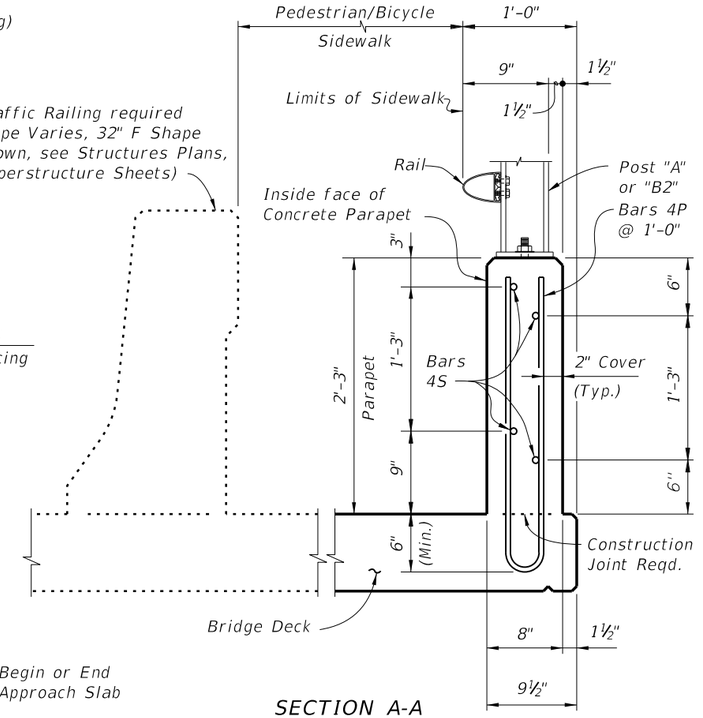

SECTION A-A
(Typical Section Thru Bridge Deck Shown, Section Thru Approach Slab Similar)
(Aluminum Bullet Railing Shown, For Bridge Fencing see Index Nos. 810, 811 or 812)

INTERMEDIATE JOINT SEAL NOTE:

1. At Intermediate Open Joints, seal the lower 6" portion of the open joint with Pre-cured Silicone Sealant in accordance with Section 932 of the Specifications.
2. Apply sealant prior to any Class V finish coating and remove all curing compound and loose material from the surface prior to application of bonding agent.
3. The cost of the Pre-cured Silicone Sealant shall be included in the Contract Unit Price for the Concrete Parapet.

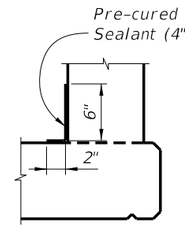

DETAIL "A" - SECTION
AT INTERMEDIATE OPEN JOINT

ALTERNATE REINFORCING (WELDED WIRE REINF.) DETAILS

NOTE: Place wire panels to minimize the end overhang. End Overhangs greater than 4¾" are not permitted.

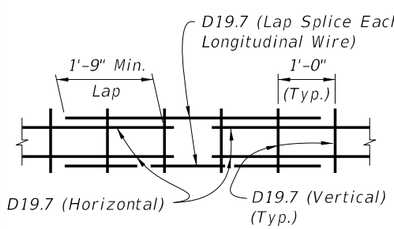

SPLICE DETAIL
(Between WWR Sections)

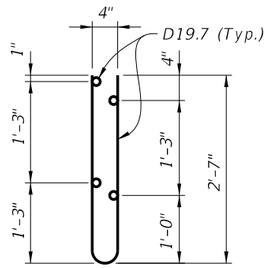

WELDED WIRE REINFORCEMENT
(WWR)

CONVENTIONAL REINFORCING STEEL BENDING DIAGRAMS

BILL OF REINFORCING STEEL

MARK	SIZE	LENGTH
P	4	5'-5"
S	4	As Reqd.

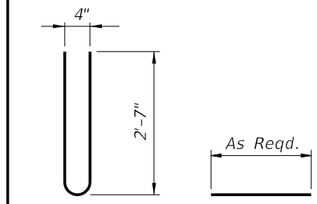

BAR 4P BAR 4S

ESTIMATED CONCRETE PARAPET QUANTITIES

ITEM	UNIT	QUANTITY
Concrete	CY/LF	0.056
Reinforcing Steel	LB/FT	6.29

(The above quantities are based on a deck with a 2% cross slope)

REINFORCING STEEL NOTES:

1. All bar dimensions in the bending diagrams are out to out.
2. The reinforcement for the parapet on a retaining wall shall be the same as detailed above for a 8" deck.
3. All reinforcing steel at the open joints shall have a 2" minimum cover.
4. Bars 4S may be continuous or spliced at the construction joints. Bar splices for Bars 4S shall be a minimum of 1'-9".
5. At the option of the Contractor Welded Wire Reinforcement (WWR) may be used in lieu of all Bars 4P and 4S. Welded Wire Reinforcement shall conform to ASTM A497.

PEDESTRIAN/BICYCLE RAILING NOTES:

CONCRETE PARAPET: Concrete parapet shall be placed vertical and top surface shall be level transversely.
RAIL AND POST DETAILS: For Rail, Post, Rail Expansion Joint fabrication and installation details and notes see Index No. 822.
BRIDGE FENCING: For Bridge Fencing see Index Nos. 810, 811 or 812 in lieu of Posts and Rails on Index No. 822.
PAYMENT: Concrete Parapet shall be paid for under the contract unit price for 27" Concrete Parapet (Pedestrian/Bicycle), LF, and Rails shall be paid for under Aluminum Bullet Railings, LF.

C:\d\projects\standards\structures\2013book\00820-1of1.dgn
rd960rh
2:10:55 PM
6/28/2012

LAST REVISION	REVISION	DESCRIPTION:
01/01/11		

FDOT DESIGN STANDARDS
2013

BRIDGE PEDESTRIAN/BICYCLE BULLET RAILING

INDEX NO. 820

SHEET NO. 1

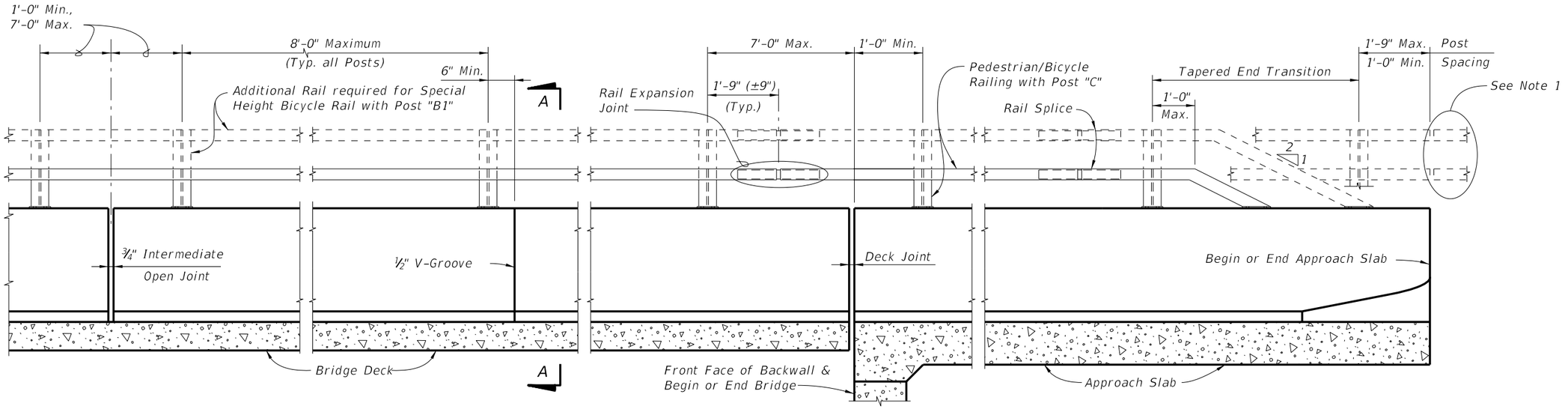

ELEVATION OF INSIDE FACE OF TRAFFIC RAILING WITH PEDESTRIAN/BICYCLE BULLET RAILING

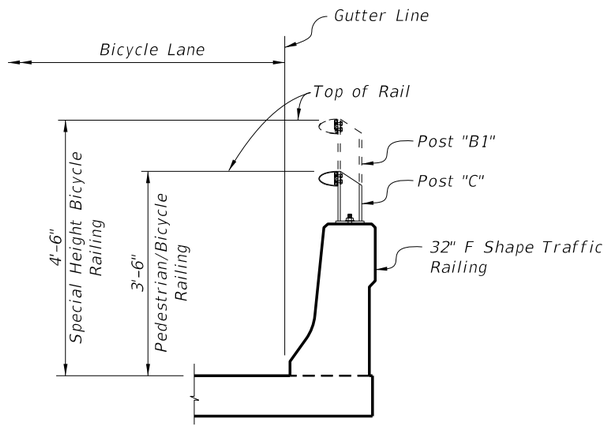

SECTION A-A
TYPICAL SECTION THRU BRIDGE DECK
(APPROACH SLAB SIMILAR)

NOTES:

1. *Where Bullet Railing continues on retaining wall mounted Traffic Railings or other Traffic Railings, the Tapered End Transition shall be located at the terminus of the Bullet Railing.*

CROSS REFERENCES:

1. *For Post, Rail and Rail Expansion Joint fabrication and installation Details and Notes see Index No. 822.*

2. *For Traffic Railing Details, Reinforcement and Notes see Index No. 420.*

6/28/2012 2:11:00 PM rd960rh C:\d\projects\standards\structures\2013book\00821-1of1.dgn

LAST REVISION	REVISION	DESCRIPTION:		FDOT DESIGN STANDARDS 2013	BRIDGE ALUMINUM PEDESTRIAN/BICYCLE BULLET RAILING FOR TRAFFIC RAILING (32" F SHAPE)	INDEX NO.	SHEET NO.
01/01/12						821	1

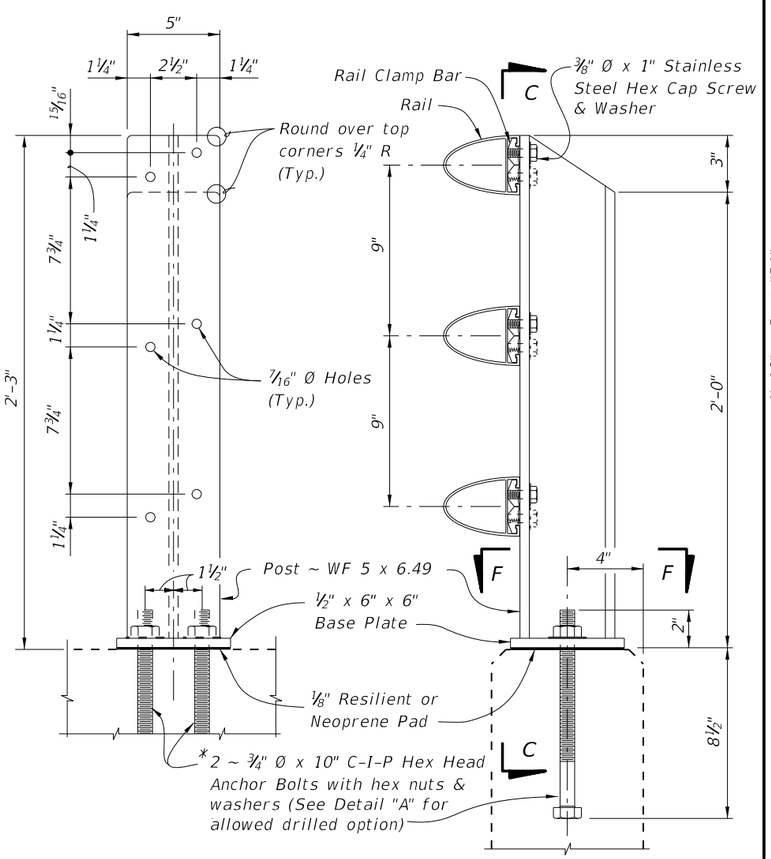

SECTION C-C
(RAILS NOT SHOWN)

ELEVATION
OF POST "A"

POST "A" DETAILS FOR SPECIAL HEIGHT BICYCLE RAILING ON CONCRETE PARAPET (INDEX NO. 820)

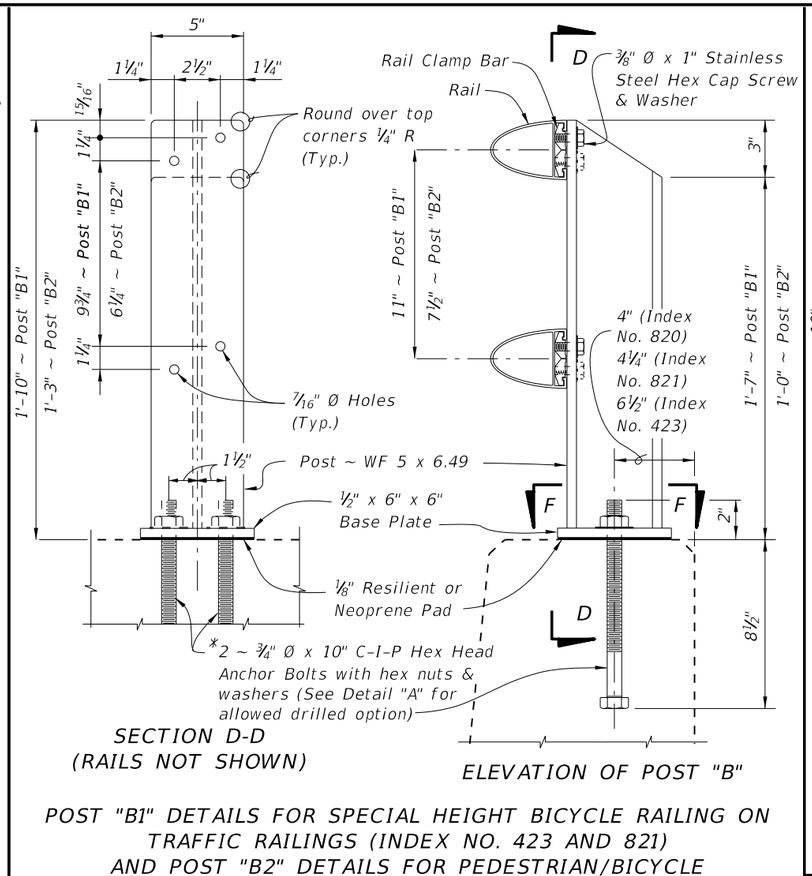

SECTION D-D
(RAILS NOT SHOWN)

ELEVATION OF POST "B"

POST "B1" DETAILS FOR SPECIAL HEIGHT BICYCLE RAILING ON TRAFFIC RAILINGS (INDEX NO. 423 AND 821)
AND POST "B2" DETAILS FOR PEDESTRIAN/BICYCLE RAILING ON CONCRETE PARAPETS (INDEX NO. 820)

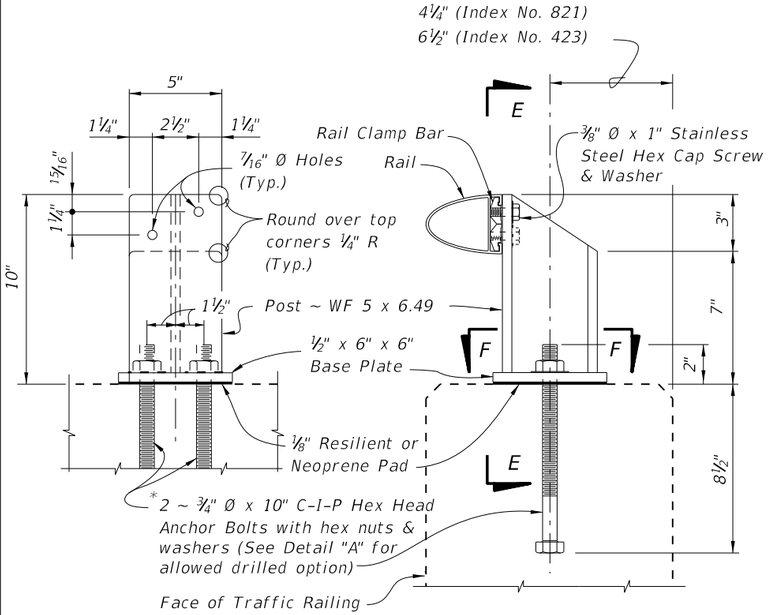

SECTION E-E
(RAIL NOT SHOWN)

ELEVATION
OF POST "C"

POST "C" DETAILS FOR PEDESTRIAN/BICYCLE RAILING ON TRAFFIC RAILINGS (INDEX NO. 423 AND 821)

NOTE: After nuts have been tightened, the bolt threads shall be deformed to prevent removal of nuts. Tack welding of nuts to anchor bolts, to prevent theft, is permitted. Coat deformed or tack welded threads with a galvanizing compound in accordance with Section 562 of the Specifications.

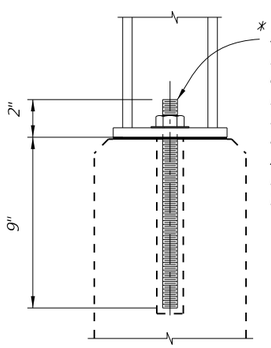

ALTERNATE ANCHOR BOLT DETAIL "A"
(Concrete Parapet Shown,
Traffic Railings Similar)

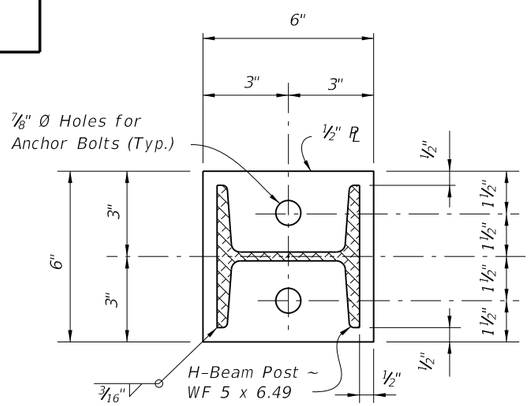

SECTION F-F
BASE PLATE DETAIL

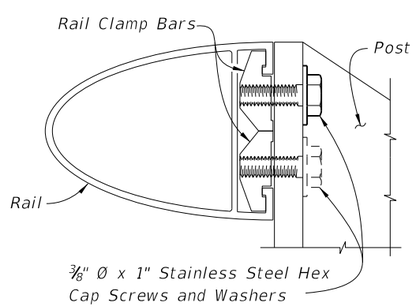

RAIL TO POST CONNECTION DETAIL

CROSS REFERENCES:

For Post "A" and Post "B2" spacing see Index No. 820.

For Post "B1" & Post "C" spacing see Index Nos. 423 or 821.

For Rail Details see Index Sheet 2.

For Railing Notes and Tapered End Transition Details see Sheet 3.

LAST REVISION	REVISION	DESCRIPTION:		FDOT DESIGN STANDARDS 2013	BRIDGE ALUMINUM PEDESTRIAN/BICYCLE BULLET RAILING DETAILS	INDEX NO.	SHEET NO.
01/01/12						822	1

6/28/2012 2:11:02 PM rd960rh C:\d\projects\standards\structures\2013book\00822-1of3.dgn

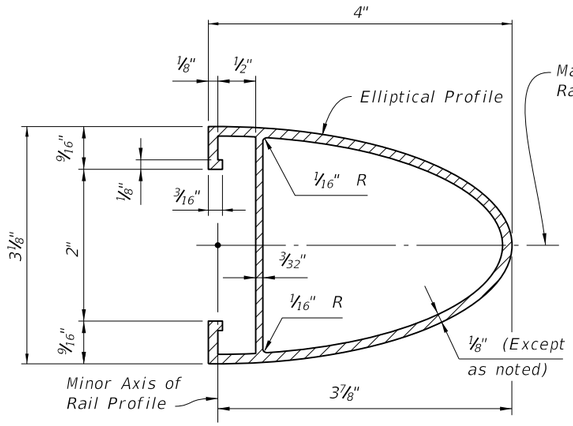

SECTION A-A
TYPICAL SECTION THRU RAIL

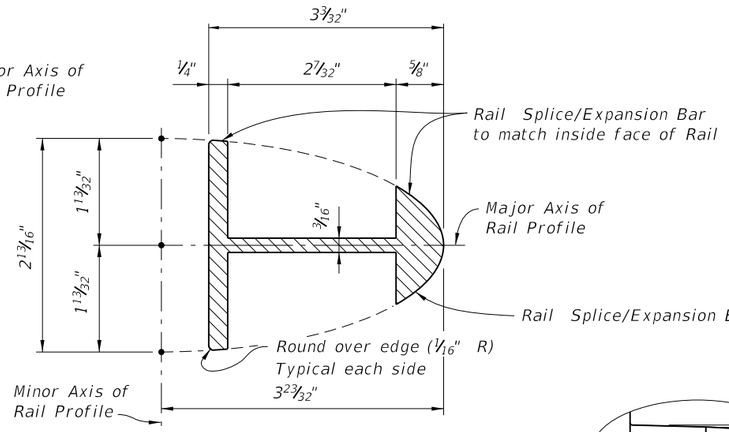

SECTION B-B - RAIL SPLICE/EXPANSION BAR
(Rail not shown for clarity)

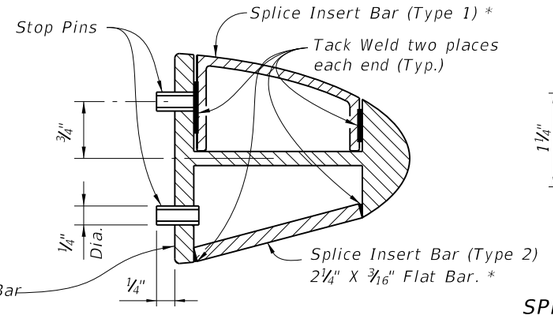

SECTION C-C

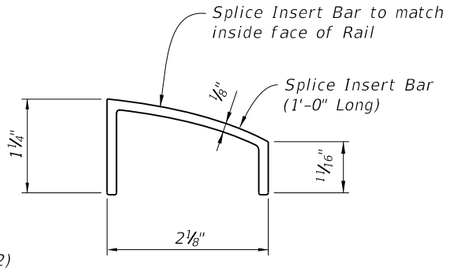

SPLICE INSERT BAR DETAIL (TYPE 1)

* Use of either Type 1 or Type 2 Splice Insert Bars is at the option of the Contractor.

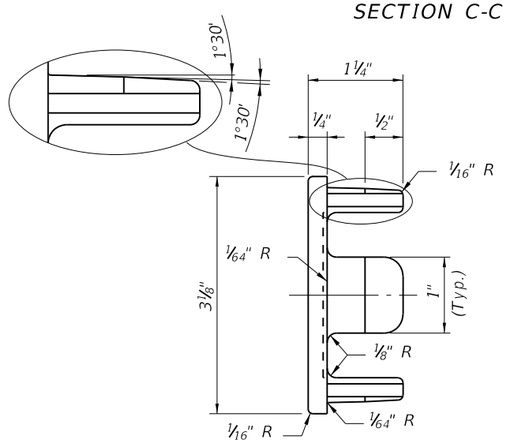

VIEW D-D

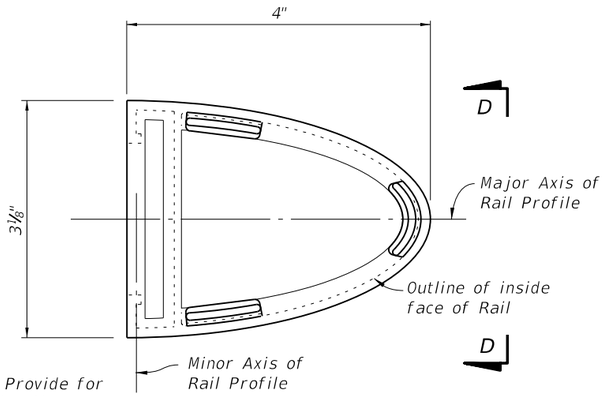

NOTE: Provide for drive fit.

RAIL END CAP DETAIL

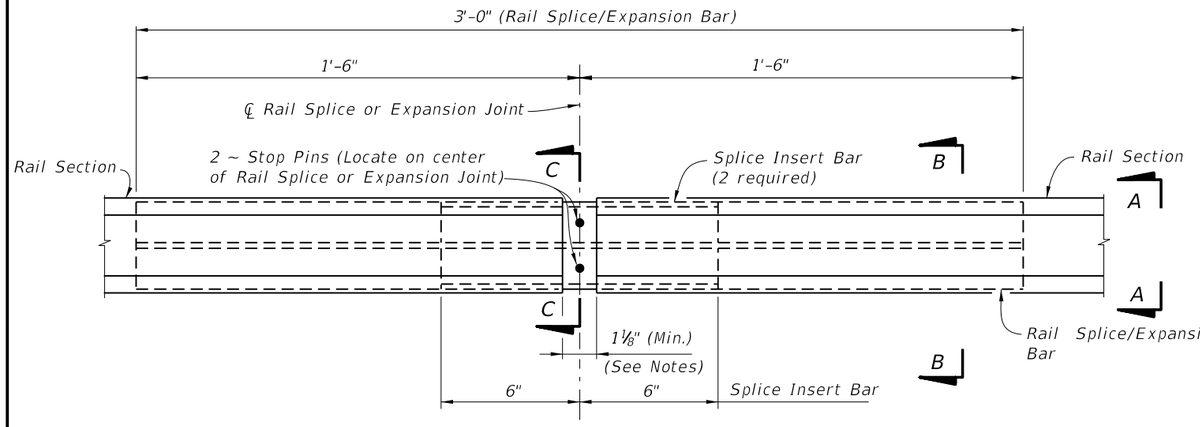

RAIL SPLICE ASSEMBLY DETAIL (TYPICAL AT BRIDGE EXPANSION JOINTS AND RAIL SPLICE LOCATIONS)

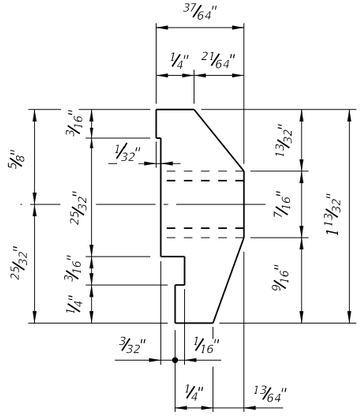

VIEW E-E

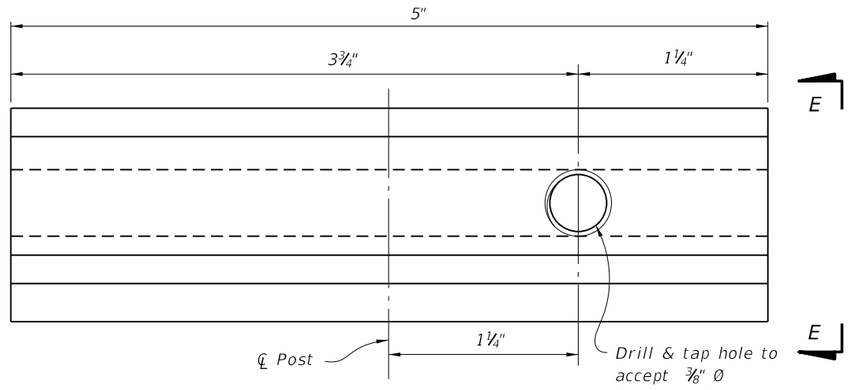

RAIL CLAMP BAR DETAIL

CROSS REFERENCE:
For Railing Notes and Tapered End Transition Details, See Sheet 3.

LAST REVISION	REVISION	DESCRIPTION:			INDEX NO.	SHEET NO.
01/01/12			FDOT DESIGN STANDARDS 2013	BRIDGE ALUMINUM PEDESTRIAN/BICYCLE BULLET RAILING DETAILS	822	2

C:\d\projects\standards\structures\2013book\00822-2of3.dgn rd960rh 2:11:04 PM 6/28/2012

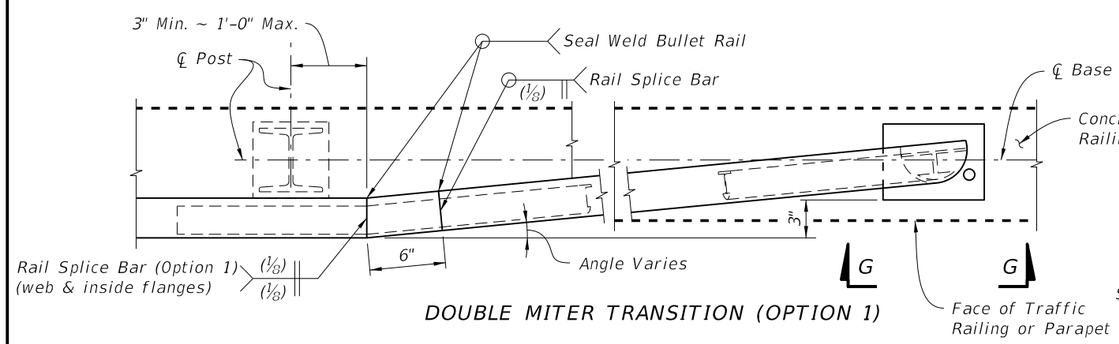

DOUBLE MITER TRANSITION (OPTION 1)

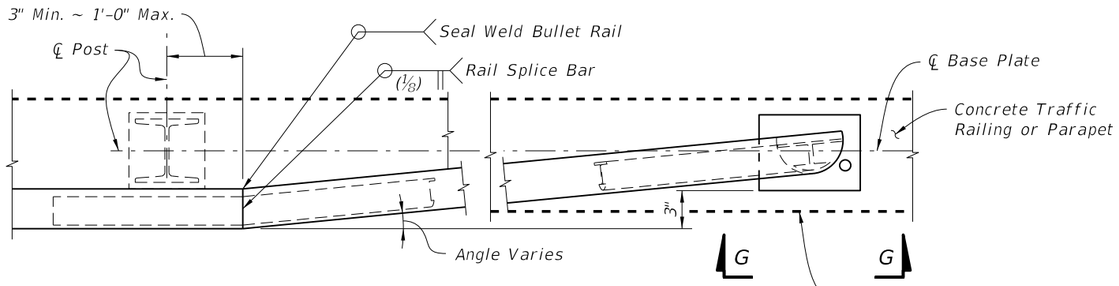

COMPOUND MITER TRANSITION (OPTION 2)

PARTIAL PLAN OF TAPERED END TRANSITIONS
(Single Rail Shown, Double or Triple Rail Similar)

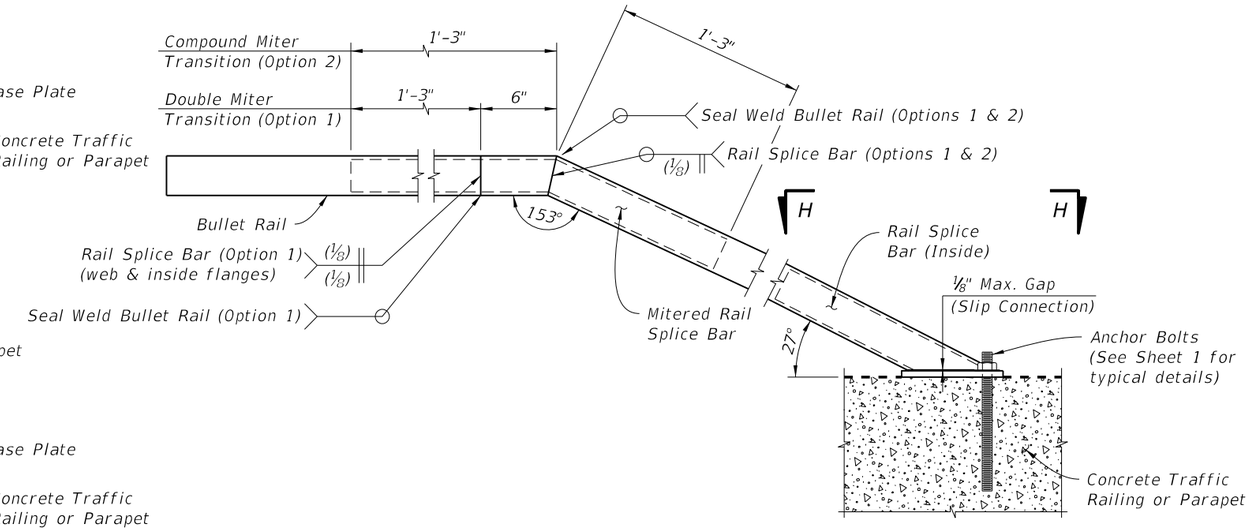

ELEVATION OF TAPERED END TRANSITION
(Single Rail Shown, Double or Triple Rail Similar)

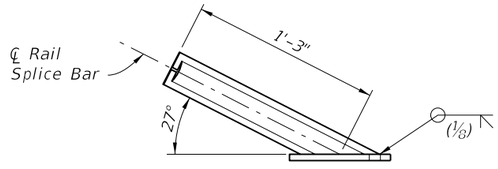

VIEW G-G TRANSITION BASE PLATE
(Bullet Rail not shown for Clarity)

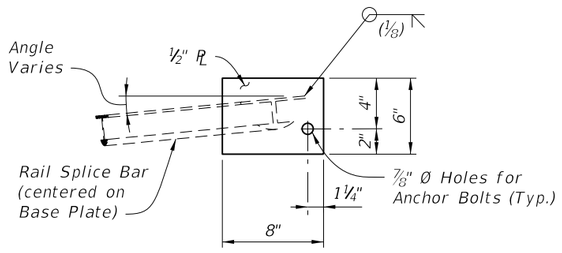

VIEW H-H TRANSITION BASE PLATE
(Bullet Rail not shown for Clarity)

RAILING NOTES:

PAYMENT: Payment for the railing includes Rails, Posts, Rail Splice Assemblies, Rail Clamp Bars, Rail End Caps, Anchor Bolts, Nuts, Resilient Pads, Screws and Washers and all incidental materials and labor required to complete the installation.

POST ASSEMBLY: Fabricated wrought aluminum; Post – ASTM B221, alloy 6061–T6, or alloy 6351–T5; Base Plate – ASTM B209, alloy 6061–T6.

WELDING: Welding of aluminum components shall be in accordance with ANSI and AWS D1.2 "Structures Welding Code – Aluminum".

RAIL AND RAIL SPLICE ASSEMBLIES: Aluminum; ASTM B221, alloy 6061–T6, or alloy 6351–T5. Stop Pins shall be press–fit Aluminum or Stainless Steel pins or tubes, unless otherwise approved by the Engineer.

RAIL CLAMP BAR: Aluminum; ASTM B221, alloy 6061–T6, or alloy 6351–T5.

STAINLESS STEEL FASTENERS: ⅜" Ø Hex Cap Screws and Washers shall be ASTM F–593, alloy group 2 (316).

ANCHOR BOLTS: Anchor bolts shall be in accordance with ASTM A36 or ASTM F1554, Grade 36. Anchor Bolts, Nuts, and Washers shall be hot dip galvanized in accordance with Specification Section 962.

RAIL END CAP: ASTM B26 sand cast aluminum alloy 356.0–F.

RAIL INSTALLATION: Set Rail Posts normal to Profile Grade longitudinally and vertical transversely. Post spacings that land on barrier or parapet obstacles such as armor expansion plates etc. shall be adjusted to clear obstacles by 9" without exceeding maximum post spacing. Post shall be uniformly spaced with reasonable consistency. Set Posts on ⅛" thick resilient or neoprene pads in accordance with Specification Section 932. The pad dimension shall be the same as the post base plate. Provide rail expansion joint in panels between posts on either side of Bridge Expansion Joints. Rail expansion joints shall be similar to rail splice with provision for movement equal to 1.5 times the bridge joint opening or 1" greater than the expected joint movement. Take care to ensure rails are set with the proper openings. Remove any burrs or sharp edges on rails and posts to prevent injury.

RAIL SPLICES: Rails shall be continuous over a minimum of 3 posts, except that lengths less than 12' need only be continuous over 2 posts. Space splices at 40'–0" maximum centers. Splice all rails in any railing section about the same center line.

RESILIENT AND NEOPRENE PADS: Resilient and Neoprene Pads shall be in accordance with the Specifications except that testing of the finished pads is not required. Neoprene pads shall be durometer hardness 60 or 70.

SHOP DRAWINGS: Submit typical details for straight alignments and complete details for end terminations or curved alignments with radii < 40', including post and expansion joint locations of the proposed railing for the Engineer's approval prior to fabrication.

CROSS REFERENCE:
For Post Details see Sheet 1.
For Rail Details see Sheet 2.

6/28/2012 2:11:07 PM rd960rh C:\d*projects\standards\structures\2013book\00822_3of3.dgn

LAST REVISION	REVISION	DESCRIPTION:			INDEX NO.	SHEET NO.
01/01/12			FDOT DESIGN STANDARDS 2013	BRIDGE ALUMINUM PEDESTRIAN/BICYCLE BULLET RAILING DETAILS	822	3

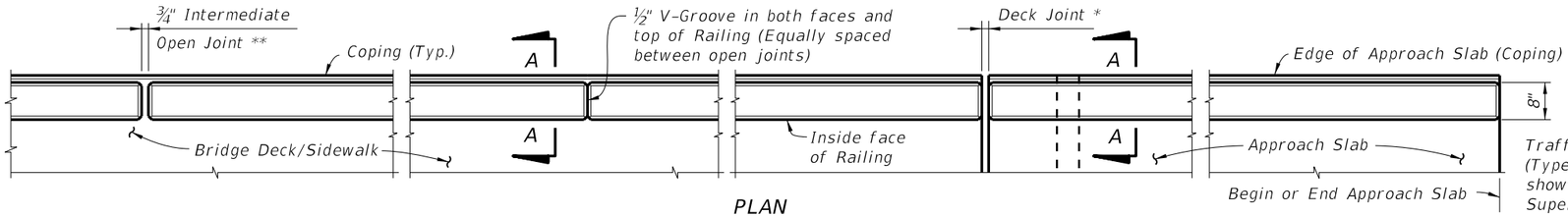

PLAN
(Reinforcing Steel not shown for clarity)

* See Structures Plans, Superstructure Sheets for actual dimensions and joint orientation. Open Railing Joints at Deck Expansion Joint locations shall match the dimension of the Deck Joint. For treatment of Railings on skewed bridges see Index No. 420. Deck Joint at Begin Bridge or End Bridge shown. Deck Joint at ℄ Pier or Intermediate Bent similar.

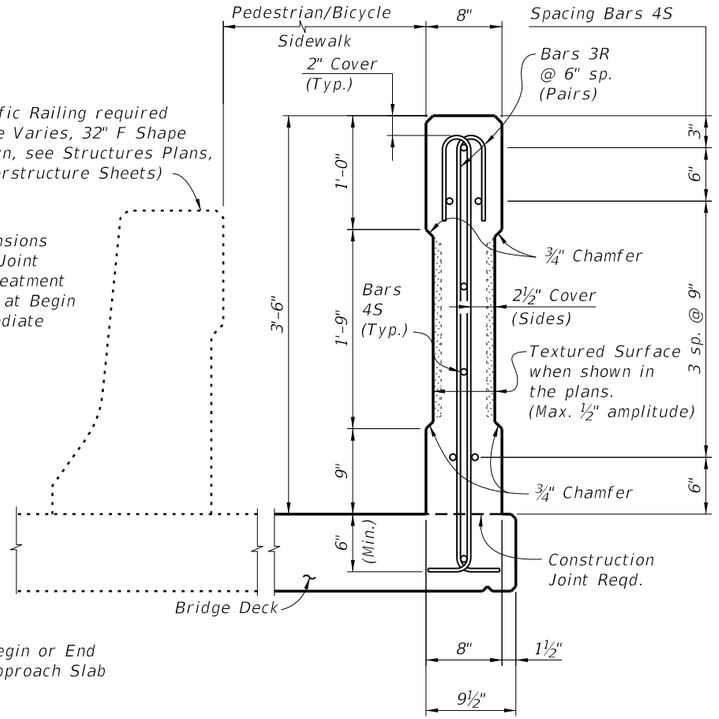

SECTION A-A
(Typical C-I-P Section Thru Bridge Deck Shown,
Section Thru Approach Slab Similar)

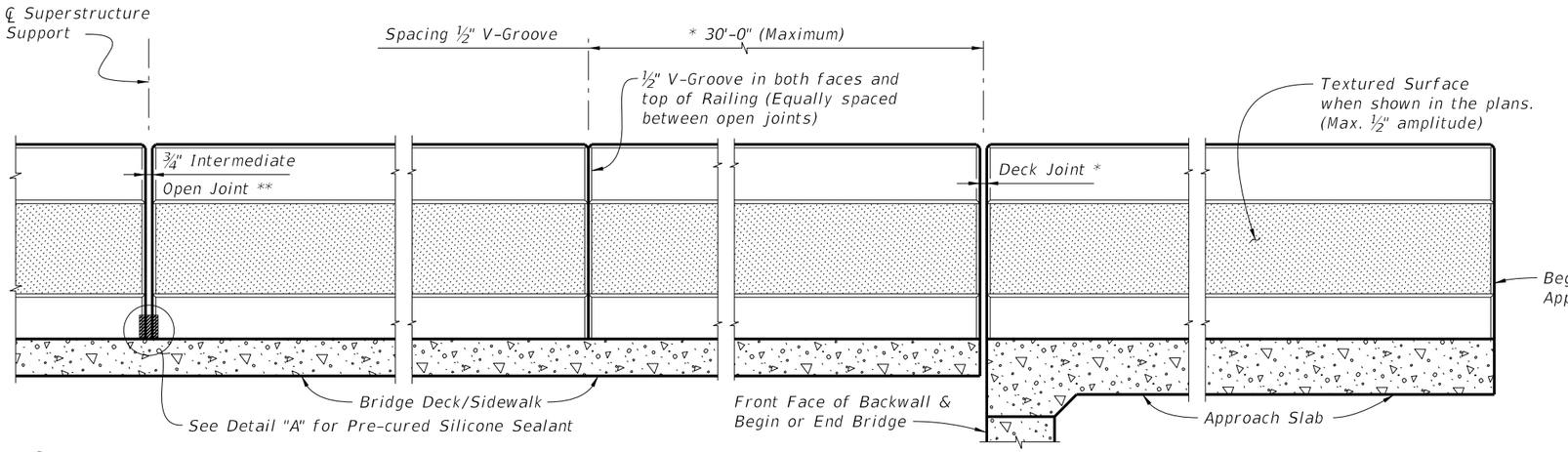

** ¾" Intermediate Open Joints shall be provided at locations coinciding with ¾" Joints for the Traffic Railing.

ELEVATION OF INSIDE FACE OF RAILING
(Reinforcing Steel not shown for clarity)

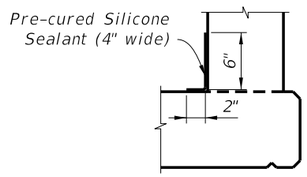

DETAIL "A" - SECTION
AT INTERMEDIATE OPEN JOINT

ESTIMATED CONCRETE RAILING QUANTITIES

ITEM	UNIT	QUANTITY
Concrete	CY/LF	0.079
Reinforcing Steel	LB/LF	13.12

(The above quantities are based on a deck with a 2% cross slope)

ALTERNATE REINFORCING (WELDED WIRE REINF.) DETAILS

NOTE: Place wire panels to ensure vertical wire is within 4" of open joints.

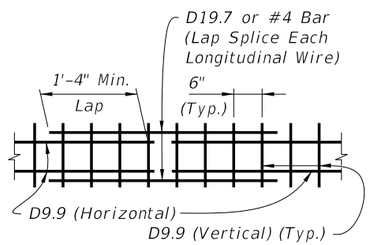

SPLICE DETAIL
(Between WWR Sections)

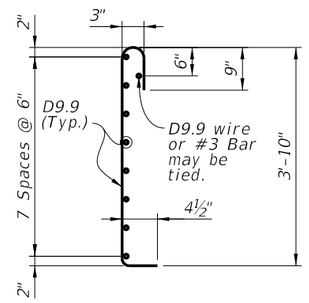

WELDED WIRE REINFORCEMENT
(WWR)
(2 Pieces Reqd.)

CONVENTIONAL REINFORCING STEEL BENDING DIAGRAMS

BILL OF REINFORCING STEEL

MARK	SIZE	LENGTH
R	3	5'-2"
S	4	As Reqd.

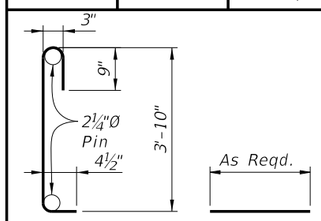

BAR 3R BAR 4S

RAILING NOTES:
1. Railing shall be placed vertical and top surface shall be level transversely.

INTERMEDIATE JOINT SEAL NOTES:
1. At Intermediate Open Joints, seal the lower 6" portion of the open joint with Pre-cured Silicone Sealant in accordance with Specification Section 932.
2. Apply sealant prior to any Class 5 Finish Coating and remove all curing compound and loose material from the surface prior to application of bonding agent.
3. The cost of the Pre-cured Silicone Sealant shall be included in the Contract Unit Price for the Railing.

REINFORCING STEEL NOTES:
1. All bar dimensions in the bending diagrams are out to out.
2. The reinforcement for the railing on a retaining wall shall be the same as detailed above for an 8" deck.
3. All reinforcing steel at the open joints shall have a 2" minimum cover.
4. Bar splices for Bars 4S shall be a minimum of 1'-4".
5. At the option of the Contractor Welded Wire Reinforcement (WWR) may be used in lieu of all Bars 3R and 4S. Welded Wire Reinforcement shall conform to Specification Section 931.

C:\d_projects\standards\structures\2013book\00825-1of1.dgn rd960rh 2:11:09 PM 6/28/2012

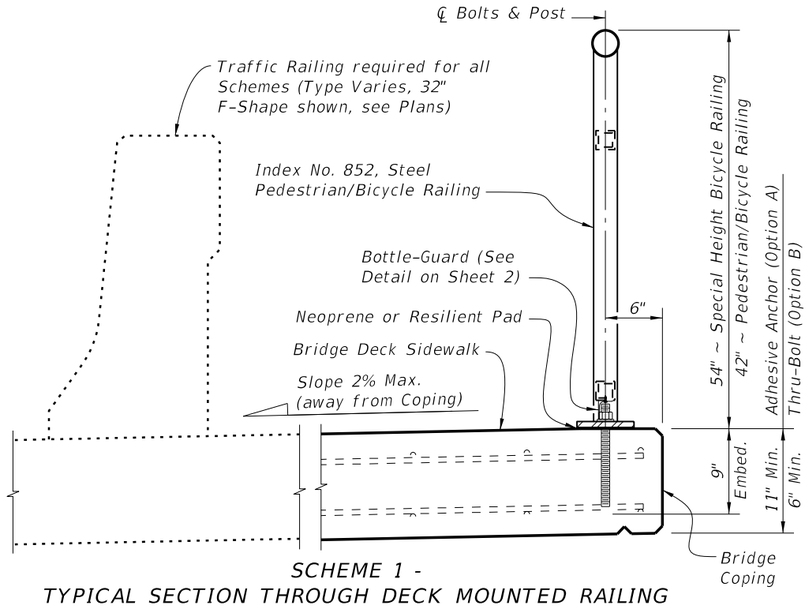

SCHEME 1 -
TYPICAL SECTION THROUGH DECK MOUNTED RAILING
(Adhesive Anchor Option shown - SCHEME 1A)

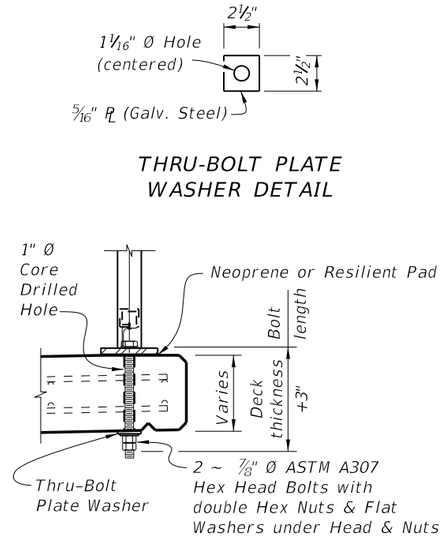

SCHEME 1B - DETAILS
(Thru-Bolt Option)

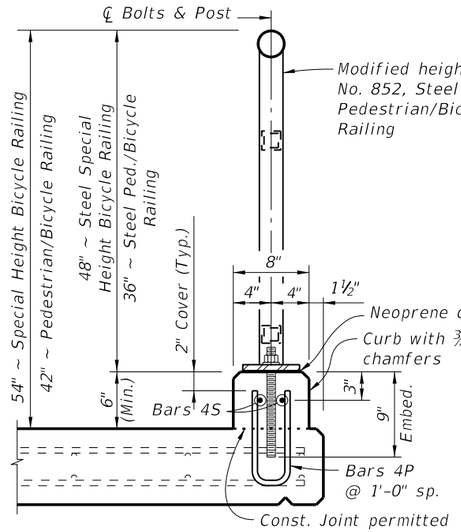

SCHEME 2 -
TYPICAL SECTION THROUGH
CURB MOUNTED RAILING

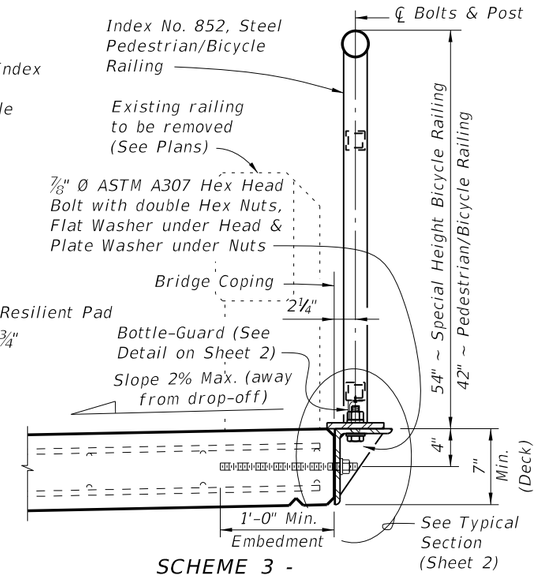

SCHEME 3 -
TYPICAL SECTION THROUGH
SIDE MOUNTED RAILING (RETROFIT)

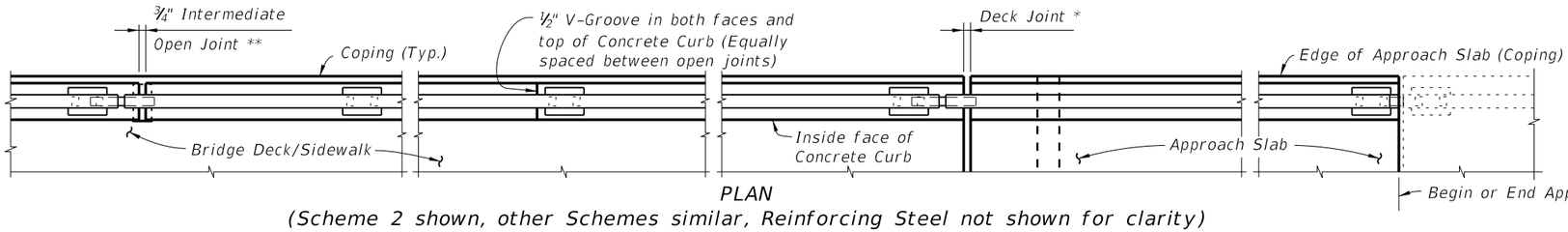

PLAN
(Scheme 2 shown, other Schemes similar, Reinforcing Steel not shown for clarity)

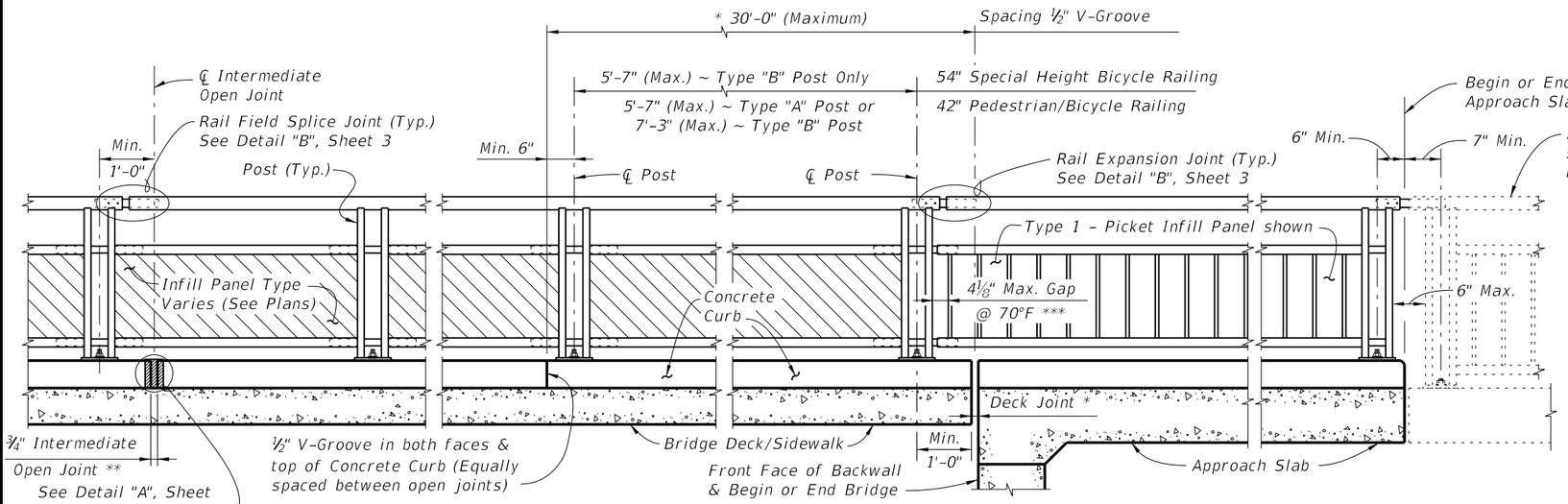

ELEVATION OF INSIDE FACE OF RAILING
(Scheme 2 shown with Post "A", other Schemes similar, Reinforcing Steel not shown for clarity)

* See Structures Plans, Superstructure Sheets for actual dimensions and joint orientation. Open Curb Joints at Deck Expansion Joint locations shall match the dimension of the Deck Joint. For treatment of Railings on skewed bridges see Index No. 420. Deck Joint at Begin Bridge or End Bridge shown. Deck Joint at ℄ Pier or Intermediate Bent similar.

** ¾" Intermediate Open Joints shall be provided at locations coinciding with ¾" Joints for the Traffic Railing.

*** Clear opening between adjacent pickets or panel at Rail Expansion Joints, above Deck Expansion Joints with a total thermal movement greater than 4", must be reduced to 3½".

C:\d\projects\standards\structures\2013book\00851-1of3.dgn rd960rh 2:11:12 PM 6/28/2012

LAST REVISION	REVISION	DESCRIPTION:				
01/01/12			FDOT DESIGN STANDARDS 2013	BRIDGE PEDESTRIAN/BICYCLE RAILING (STEEL)	INDEX NO. 851	SHEET NO. 1

ALTERNATE REINFORCING (WELDED WIRE REINF.) DETAILS

NOTE: Place wire panels to minimize the end overhang. End Overhangs greater than 4¾" are not permitted.

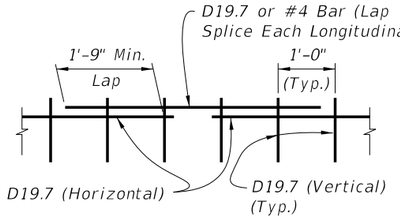

SPLICE DETAIL
(Between WWR Sections)

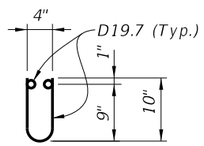

WELDED WIRE REINFORCEMENT (WWR)

CONVENTIONAL REINFORCING STEEL BENDING DIAGRAMS

BILL OF REINFORCING STEEL

MARK	SIZE	LENGTH
P	4	2'-0"
S	4	As Reqd.

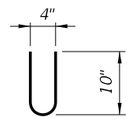

BAR 4P

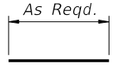

BAR 4S

CURB REINFORCING STEEL NOTES:

1. All bar dimensions in the bending diagrams are out to out.
2. The reinforcement for the curb on a retaining wall shall be the same as detailed for an 8" deck.
3. All reinforcing steel at the open joints shall have a 2" minimum cover.
4. Bars 4S may be continuous or spliced at the construction joints. Bar splices for Bars 4S shall be a minimum of 1'-9".
5. At the option of the Contractor Welded Wire Reinforcement (WWR) may be used in lieu of all Bars 4P and 4S. Welded Wire Reinforcement shall conform to ASTM A497.

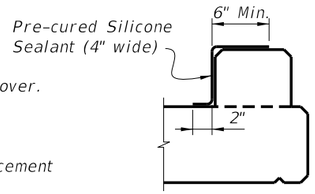

DETAIL "A" - SECTION
AT INTERMEDIATE OPEN JOINT

ESTIMATED CONCRETE CURB QUANTITIES (SCHEME 2)

ITEM	UNIT	QUANTITY
Concrete	CY/LF	0.0124
Reinforcing Steel	LB/LF	4.01

INTERMEDIATE JOINT SEAL NOTE:

At Intermediate Open Joints, seal the lower 6" portion of the open joint with Pre-cured Silicone Sealant in accordance with Specification Section 932. Apply sealant prior to any Class V finish coating and remove all curing compound and loose material from the surface prior to application of bonding agent.

SCHEME 2 - CONCRETE CURB DETAILS

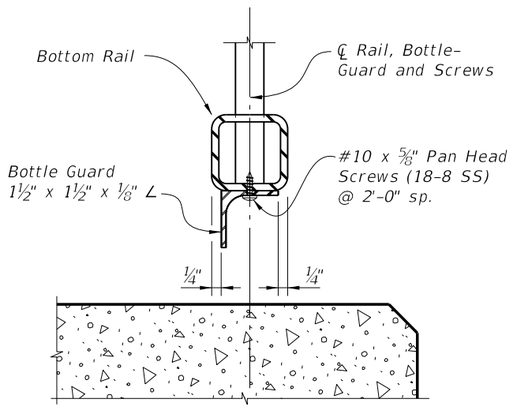

TYPICAL SECTION THROUGH BOTTOM RAIL
(Post Not Shown for Clarity)

SCHEME 1 - BOTTLE GUARD DETAIL

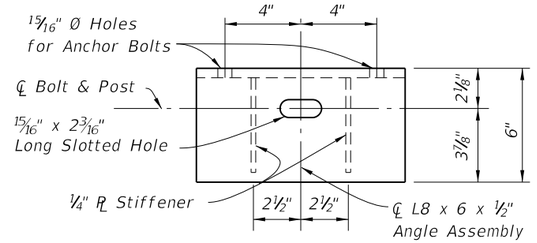

PLAN VIEW

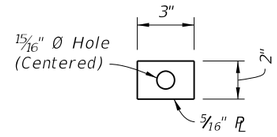

PLATE WASHER DETAIL

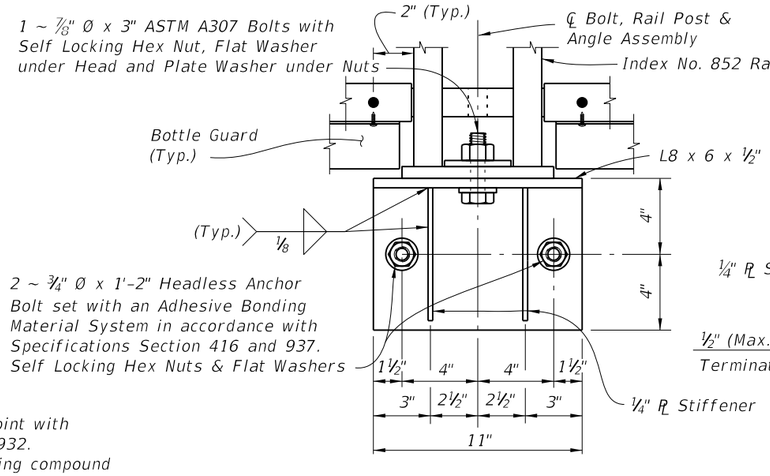

ELEVATION VIEW

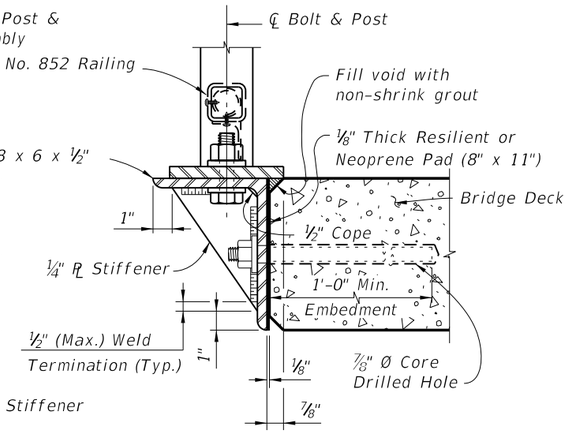

TYPICAL SECTION

SCHEME 3 - SIDE-MOUNTED SUPPORT BRACKET DETAILS

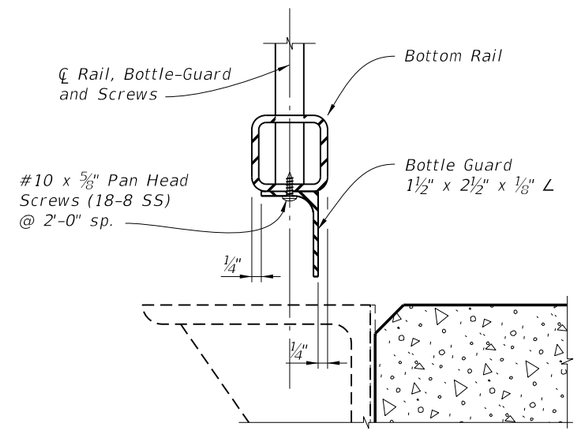

TYPICAL SECTION THROUGH BOTTOM RAIL
(Post Not Shown for Clarity)

SCHEME 3 - BOTTLE GUARD DETAIL

CROSS REFERENCE:

See Sheet 3 for Bridge Railing Notes.

6/28/2012 2:11:14 PM rd960rh C:\d\projects\standards\structures\2013book\00851-2of3.dgn

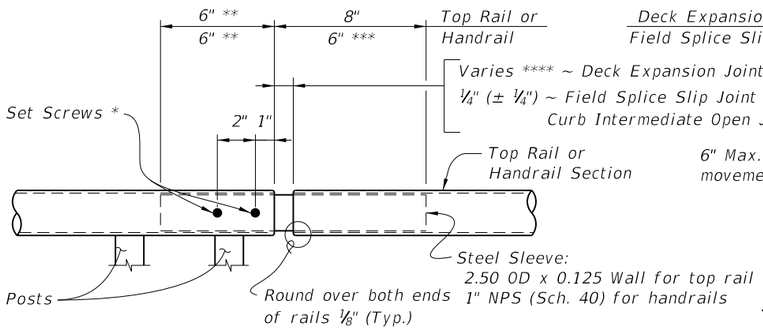

ROUND RAILS - TOP RAIL OR HANDRAIL

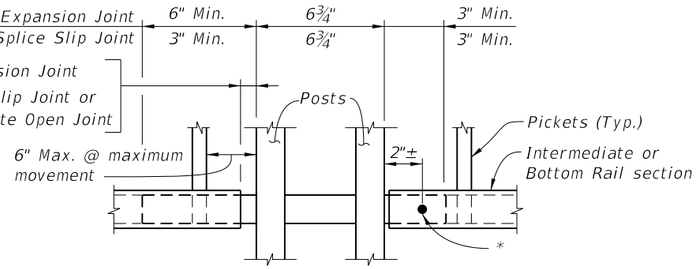

SQUARE RAILS - INTERMEDIATE OR BOTTOM RAIL

* ¼" Ø x ¾" Pan Head Stainless Steel (Type 316 or 18-8 Alloy) Set Screws along outside face of railing. Set screws must be set flush against the rail surface. A ¾" Ø plug weld may be substituted for the two set screws at expansion joints.

** Embedded length may be 4" for plug welded connection.

*** Increase handrail sleeve embedment to 8" for Expansion Joint openings greater than 2".

**** Expansion Joint opening shall match the clear opening in the deck joint but not greater than 3".

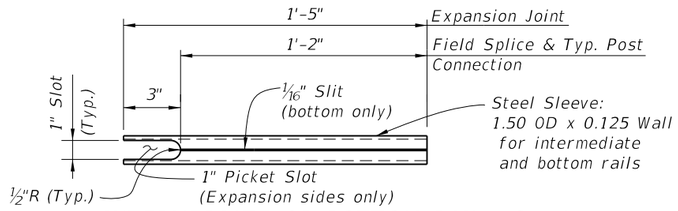

INTERMEDIATE OR BOTTOM RAIL - Steel SLEEVE DETAIL (Bottom Side Shown)

DETAIL "B" EXPANSION JOINT (FIELD SPLICE SIMILAR)

BRIDGE RAILING NOTES:

APPLICABILITY NOTE: Railing is limited to use on bridges with an expansion joint thermal movements not exceeding 5". Scheme 3 is limited to bridge retrofit applications where additional sidewalk width is required.

RAILING DETAILS: For Railing fabrication and installation details and notes see Index No. 852, except that railing shall be fabricated and installed normal to the Profile Grade longitudinally and vertical transversely, unless otherwise shown in the Contract Plans.

BOTTLE-GUARD (Schemes 1 & 3): L-Shape shall be in accordance with ASTM A36.

CONCRETE CURB (Scheme 2): Construct concrete curb vertical with the top surface finished level transversely. Concrete class shall be the same as the bridge deck.

SIDE MOUNTED SUPPORT BRACKET (Scheme 3): L-Shape and Stiffener Plate shall be in accordance with ASTM A36. Welding shall be in accordance with the American Society of Structural Welding Code (Steel) ANSI/AWS D1.1 (current edition). Weld metal shall be E60XX or E70XX. Nondestructive testing of welds is not required. The bracket shall be hot-dip galvanized after fabrication in accordance with Specification Section 962.

PAYMENT: Railing shall be paid per linear foot (Item No. 515-2-abb) for the steel railing and include the cost of support brackets (Scheme 3). Concrete and reinforcing steel quantities for the concrete curb (Scheme 2), will be included in the bridge deck plan quantity pay items. Payment will be plan quantity measured as the length along the center line of the top rail, and includes rails, posts, pickets, rail splice assembly, base plates, bottle-guards, anchor bolts, nuts, washers, resilient or neoprene pads and all incidental materials and labor required to complete installation of the railing.

6/28/2012 2:11:16 PM rd960rh C:\d\projects\standards\structures\2013book\00851-3of3.dgn

LAST REVISION	REVISION	DESCRIPTION:				
01/01/11			FDOT DESIGN STANDARDS 2013	BRIDGE PEDESTRIAN/BICYCLE RAILING (STEEL)	INDEX NO. 851	SHEET NO. 3

3D VIEW OF RAILING WITH TYPE 1 - PICKET INFILL PANEL
(42" Height shown, 54" Height Similar)

TABLE 1 - RAILING MEMBERS

MEMBER	DESIGNATION	OUTSIDE DIMENSION	WALL THICKNESS
Post "A"	HSS2½x1½x⅛	2.50" x 1.50"	0.125"
Post "B"	HSS2½x1½x3⁄16	2.50" x 1.50"	0.188"
Top Rail	2½" NPS (Sch. 10)	2.875"	0.120"
	HSS3.000x0.120	3.000"	0.120"
End Hoops	2½" NPS (Sch. 10)	2.875"	0.120"
	HSS3.000x0.120	3.000"	0.120"
Top Rail Joint/Splice Sleeves	HSS2.500x0.125	2.500"	0.125"
Intermediate & Bottom Rail	HSS2x2x3⁄16	2.00" x 2.00"	0.188" (1)
Int. & Bottom Rail Post Connection Sleeve	HSS1.500x0.125	1.500"	0.125" (1)
Handrail Joint/Splice Sleeves	1" NPS (Sch. 40)	1.315"	0.133"
Handrails	1½" NPS (Sch. 40)	1.900"	0.145"
Handrail Support Bar	¾" Ø Round Bar	0.750"	N/A
Pickets (Type 1 Infill Panel)	¾" Ø Round Bar	0.750"	N/A
Infill Panel Members (Types 2 – 5)	Varies (See Details)	Varies	Varies

TABLE 1 NOTES:
(1) 0.125" wall thickness permitted for rails with post spacings less than 5'-8", except that Post Connection Sleeve must be 1¼" NPS (Sch. 40).

NOTES

DESIGN LOADS, GEOMETRY AND APPLICABILITY:
See the Instructions for Design Standards for the design loads, geometry and applicability requirements.

GENERAL:
Adequate foundation support shall be provided for anchorage and stability against overturning. See Index No. 851 for special requirements and modifications for use on bridges. The railing shown on these drawings requires a handrail for ramps steeper than a 5% grade to conform with the requirements of the Americans with Disabilities Act (ADA).

RAILS, PANELS AND POSTS:
Pipe Rails and Pickets shall be in accordance with ASTM A500 Grade B, C or D, or ASTM A53 Grade B for standard weight pipe (Schedule 40) or ASTM A36 for bars. Structural Tube shall be in accordance with ASTM A500 Grade A, B, C or D, or ASTM A501. Perforated panels (Type 5), U-Channels and filler plates shall be ASTM A36 or A1011 (Grade 36). Posts and End Rails shall be fabricated and installed plumb, ± 1" tolerance when measured at 3'-6" above the foundation. Pickets and vertical panel elements shall be fabricated parallel to the posts, except that Type 2, 3 & 5 panel infills may be fabricated parallel to the longitudinal grade. Corners and changes in tangential longitudinal alignment shall be made continuous with a 9" bend radius or terminate at adjoining sections with mitered end sections when handrails are not required. For changes in tangential longitudinal alignment greater than 45°, posts shall be positioned at a maximum distance of 2'-0" each side of the corner and shall not be located at the corner apex. For curved longitudinal alignments the top and bottom rails and handrails shall be shop bent to match the alignment radius.

BASE PLATES AND RAIL CAPS:
Base Plates and Rail Cap Plates shall be in accordance with ASTM A36 or ASTM A709 Grade 36.

SHIM PLATES:
Shim Plates shall be aluminum in accordance with ASTM B209, Alloy 6061 or 6063. Shim plates shall be used for foundation height adjustments greater than ¼" and localized irregularities greater than ⅛". Field trim shim plates when necessary to match the contours of the foundation. Beveled shim plates may be used in lieu of trimmed flat shim plates shown. Stacked shim plates must be bonded together with adhesive bonding material and limited to a maximum total thickness of ½", unless longer anchor bolts are provided for the exposed thread length.

ANCHOR BOLTS:
Anchor bolts shall be in accordance with ASTM F1554 Grade 36. Headless anchor bolts for Adhesive Anchors shall be threaded full length. Cutting of reinforcing steel is permitted for drilled hole installation. Expansion Anchors are not permitted. All anchor bolts shall have single self-locking hex nuts. Tack welding of the nut to the anchor bolt may be used in lieu of self-locking nuts. All nuts shall be in accordance with ASTM A563 or ASTM A194. Flat Washers shall be in accordance with ASTM F436 and Plate Washers (for long slotted holes only), shall be in accordance with ASTM A36 or ASTM A709 Grade 36. After the nuts have been snug tightened, the anchor bolt threads shall be distorted to prevent removal of the nuts. Distorted threads and tack welds shall be coated with a galvanizing compound in accordance with the Specifications.

RESILIENT AND NEOPRENE PADS:
Resilient and Neoprene pads shall be in accordance with Specification Section 932 except that testing of the finished pads shall not be required. Neoprene pads shall be durometer hardness 60 to 80.

JOINTS:
All welded joints are to be ground smooth. Expansion joints shall be spaced at a maximum 40'-0". Field splices similar to the expansion joint detail may be approved by the Engineer to facilitate handling, but top rail must be continuous across a minimum of two posts.

WELDING:
All welding shall be in accordance with the American Welding Society Structural Welding Code (Steel) ANSI/AWS D1.1 (current edition). Weld metal shall be E60XX or E70XX. Nondestructive testing of welds is not required.

COATINGS:
The steel railing shall be hot-dip galvanized after fabrication in accordance with Section 962 of the Specifications mill finish unless otherwise noted in the Contract Documents. All nuts, bolts and washers shall be hot-dip galvanized in accordance with Specification Section 962.

SHOP DRAWINGS:
Complete details addressing project specific geometry (line & grade) showing post and expansion joint locations, post and panel type, anchor bolt installation "Case" or lengths, must be submitted by the Contractor for the Engineer's approval prior to fabrication of the railing. Shop drawings shall be in accordance with the Specifications.

PAYMENT:
Railing shall be paid for per linear foot (Item No. 515-2-abb). Payment will be plan quantity measured as the length along the center line of the top rail, and includes rails, posts, pickets, panels, rail splice assembly, base plates, anchor bolts, nuts, washers, resilient or neoprene pads and all incidental materials and labor required to complete installation of the railing.

5/21/2012 10:09:43 AM rd960rh C:\d\projects\standards\structures\current\ready4release\2013book\00852-1of8.dgn

LAST REVISION	REVISION	DESCRIPTION:			INDEX NO.	SHEET NO.
07/01/12			FDOT DESIGN STANDARDS 2013	STEEL PEDESTRIAN/BICYCLE RAILING	852	1

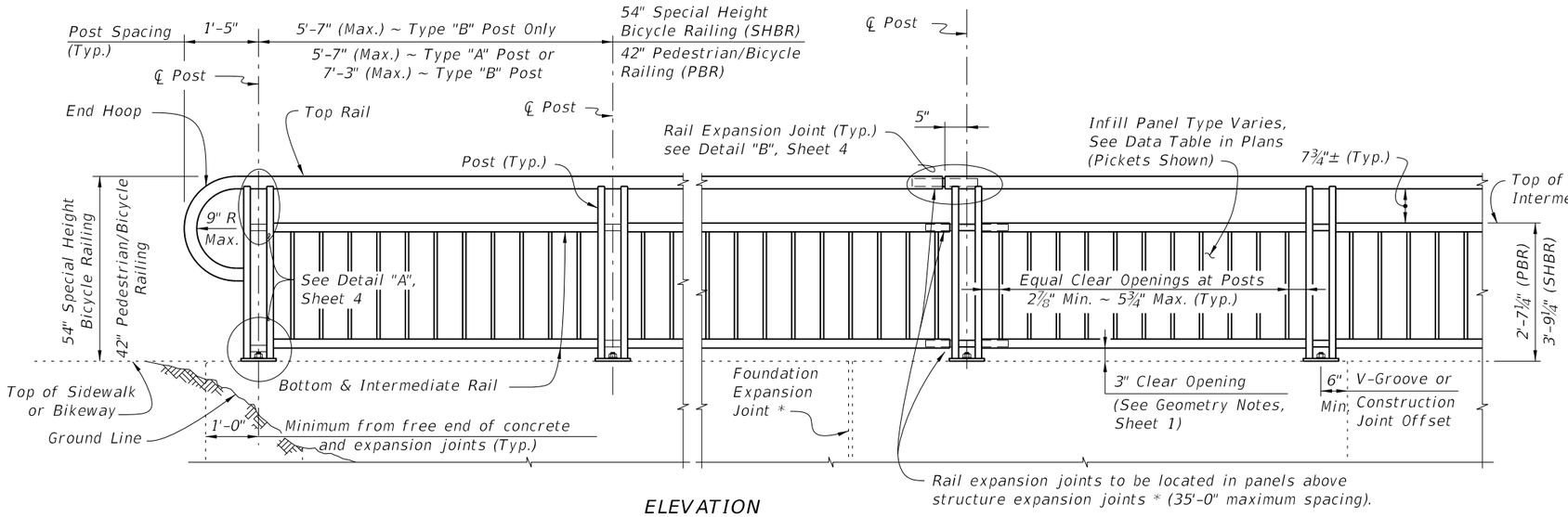

ELEVATION
(Showing Outside Face of Railing with Type "A" Posts)

TYPICAL RAILING DETAILS & RAILINGS ON GRADES 0% TO 5%

(Type 1 - Picket Railing Shown, Other Types Similar)

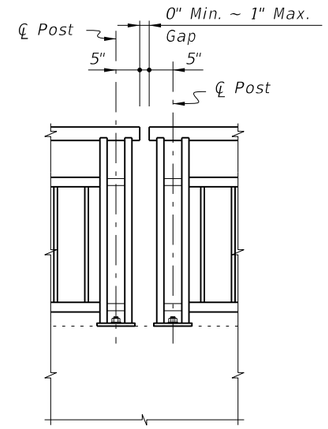

Note: Non-continuous corners are permitted when handrails are not required.

EXPANDED ELEVATION AT CORNERS

DETAIL FOR NON-CONTINUOUS RAILING AT CORNERS

NOTES:
* Keyed construction joints in Index No. 6011 Gravity Wall are not considered to be expansion joints.

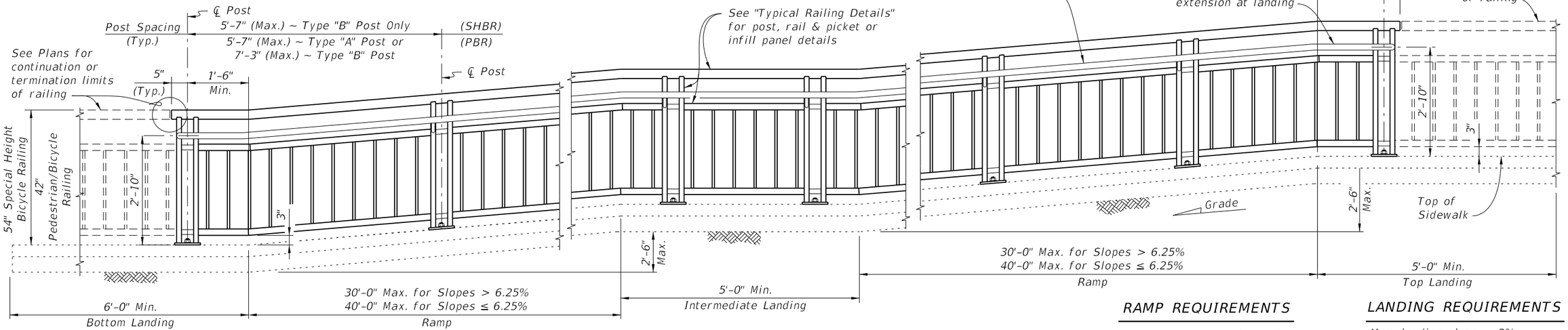

ELEVATION
(Showing Inside Face of Railing with Type "A" Posts)

RAMP REQUIREMENTS

For slopes greater than 5%:
Max. ramp slope = 8.33%
Max. ramp cross-slope = 2.0%

LANDING REQUIREMENTS

Max. landing slope = 2%
Max. landing cross-slope = 2%

RAILINGS ON GRADES STEEPER THAN 5%

(Type 1 - Picket Railing Shown, Other Types Similar)

C:\d\projects\standards\structures\2013book\00852-2of8.dgn
rd960rh
2:11:21 PM
6/28/2012

LAST REVISION	REVISION	DESCRIPTION:			INDEX NO.	SHEET NO.
01/01/11			FDOT DESIGN STANDARDS 2013	STEEL PEDESTRIAN/BICYCLE RAILING	852	2

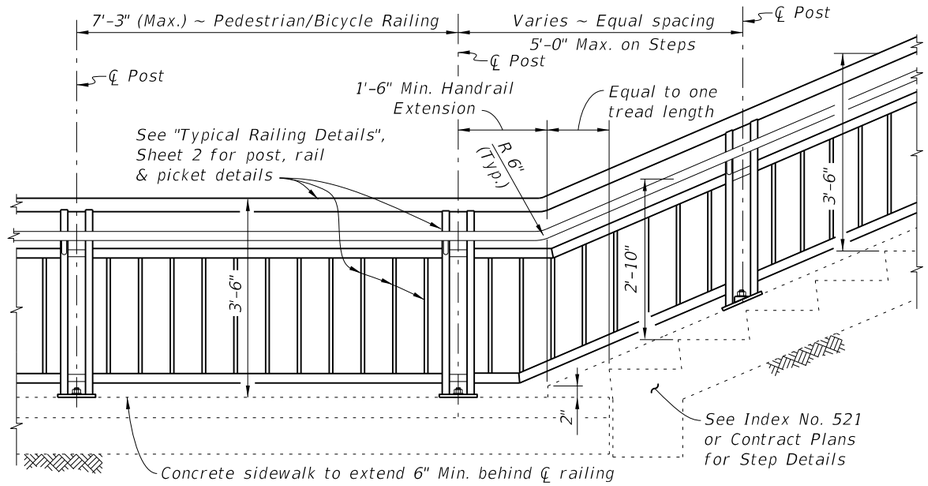

RAILING CONTINUATION BEYOND STEPS OR STAIRS
(Bottom shown, Top similar)

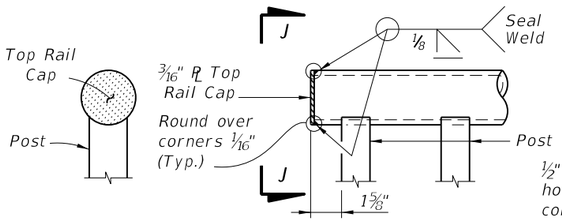

VIEW J-J

DETAIL "J" - ELEVATION VIEW
TOP RAIL TERMINATION

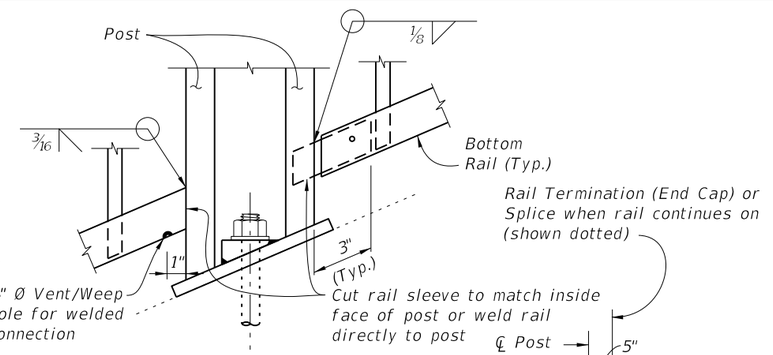

DETAIL "K" - ELEVATION VIEW
BOTTOM RAIL CONNECTION

RAIL TERMINATION DETAILS

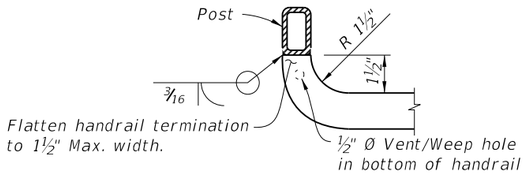

DETAIL "L" - PLAN VIEW
HANDRAIL TERMINATION

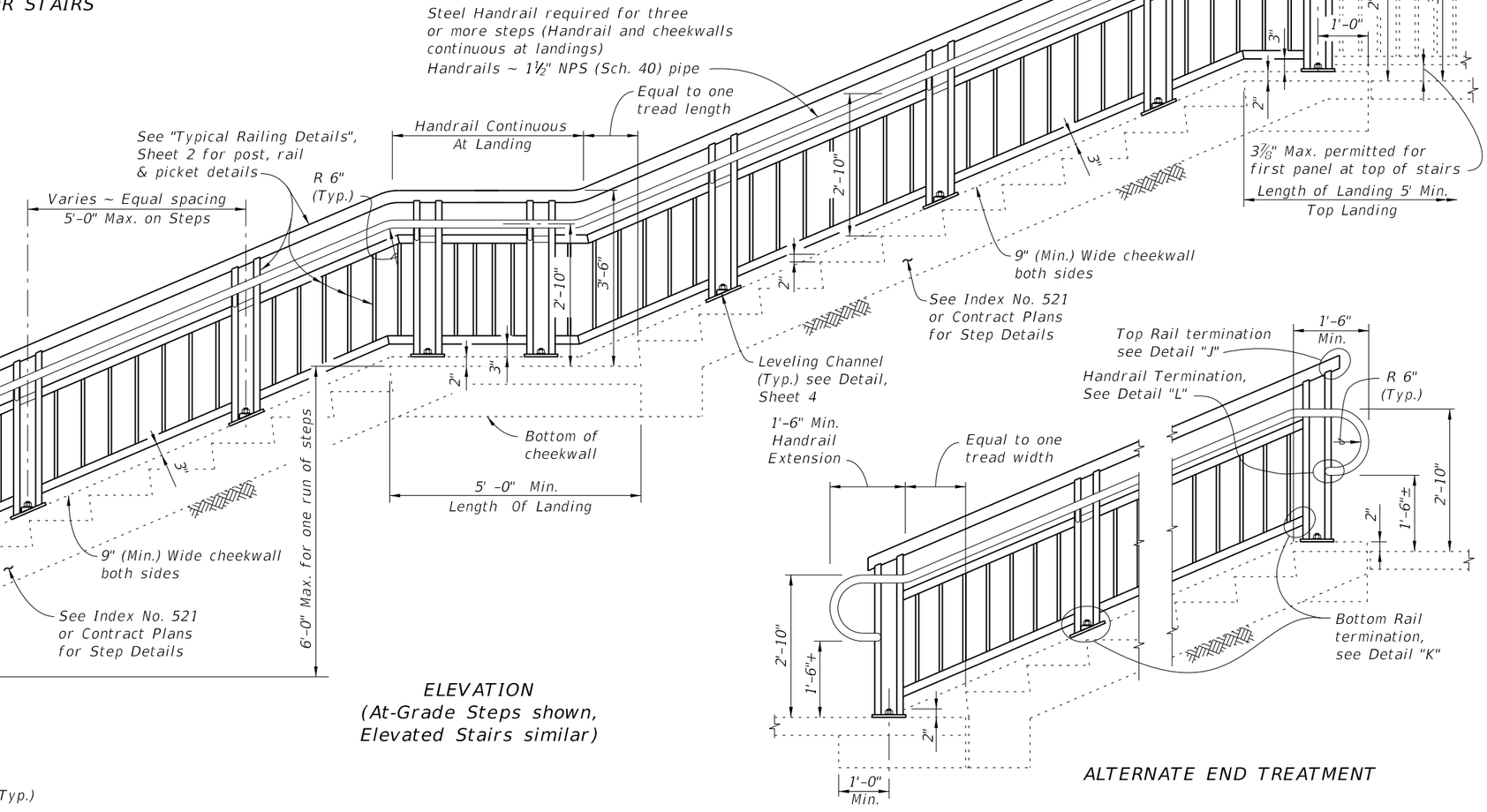

ELEVATION
(At-Grade Steps shown,
Elevated Stairs similar)

ALTERNATE END TREATMENT

RAILINGS ON STEPS & STAIRS

LAST REVISION	REVISION	DESCRIPTION:			INDEX NO.	SHEET NO.
07/01/12			FDOT DESIGN STANDARDS 2013	STEEL PEDESTRIAN/BICYCLE RAILING	852	3

C:\d\projects\standards\structures\2013book\00852-3of8.dgn rd960rh 2:11:23 PM 6/28/2012

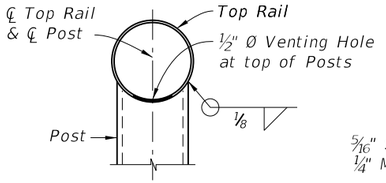

SECTION A-A
(Top Rail Connection)

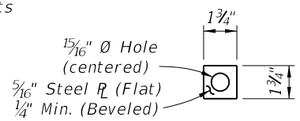

PLATE WASHER
DETAIL

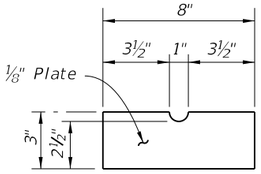

SHIM PLATE DETAIL

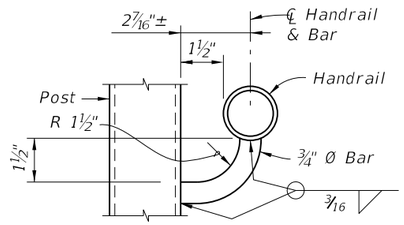

SECTION B-B
(Handrail Connection)

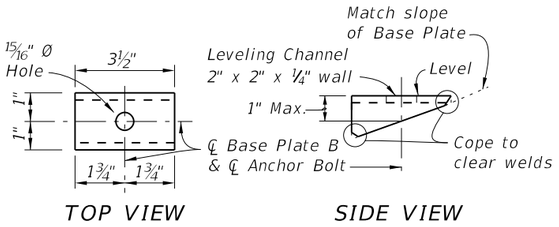

TOP VIEW SIDE VIEW

LEVELING CHANNEL DETAIL

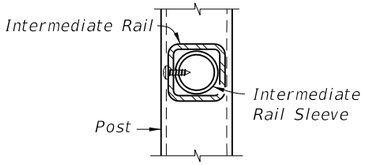

SECTION C-C
(Intermediate Rail Connection)

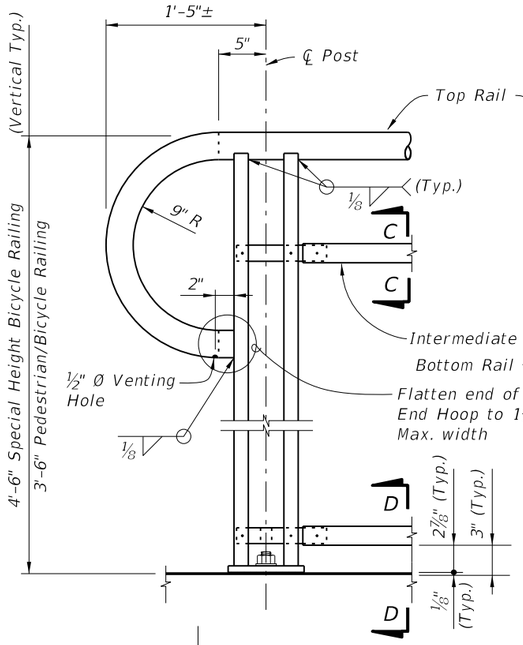

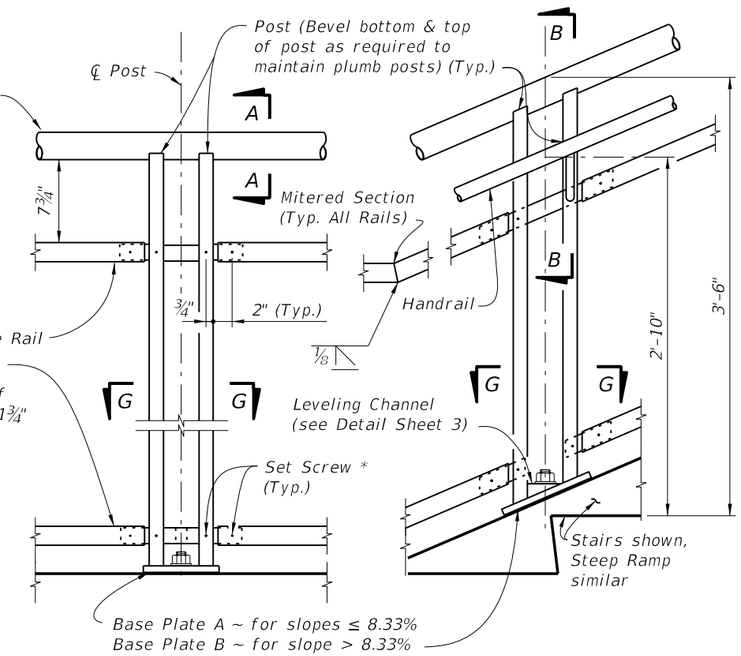

DETAIL "A" - RAIL CONNECTIONS
(Pickets/Panels Not Shown for Clarity)

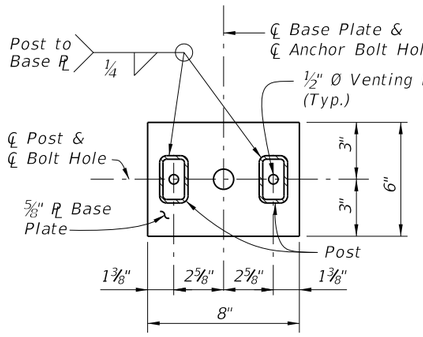

BASE PLATE A

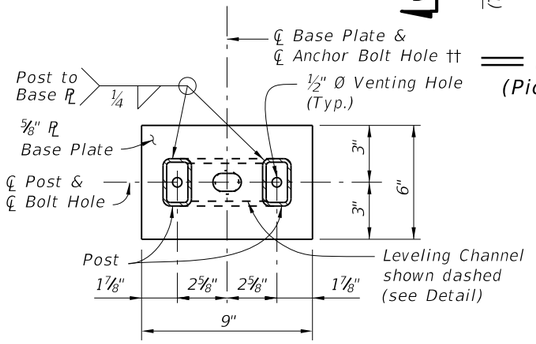

BASE PLATE B

SECTION G-G - BASE PLATE DETAILS

NOTES:

† Base Plate A (Ramps – Bolts normal) use 1 1⁄16" Ø Holes for Anchor Bolts with Flat Washers for slopes ≤ 8.33%.

†† Base Plate B (Stairs – Bolts plumb) use 1¼" Ø Holes for Anchor Bolts with Beveled Plate and Washers for slopes > 8.33% to ≤ 15%; use 15⁄16" x 1½" Slotted Holes with Leveling Channel for slopes > 15%.

* ¼" Ø x ¾" Pan Head Stainless Steel (Type 316 or 18-8 Alloy) Set Screws. Screws must be set flush against the outside face of rails & posts and underside of handrails. ½" Ø plug welds may be substituted for the Set Screws.

** Embedded length may be 4" for plug welded connection.

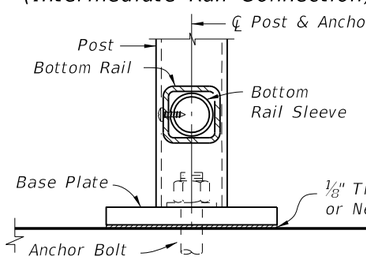

SECTION D-D
(Bottom Rail Connection)

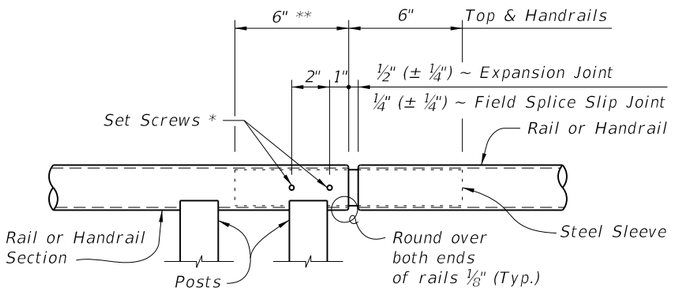

ROUND RAILS - TOP RAIL OR HANDRAIL
(Top Rail at Expansion Joint Shown)

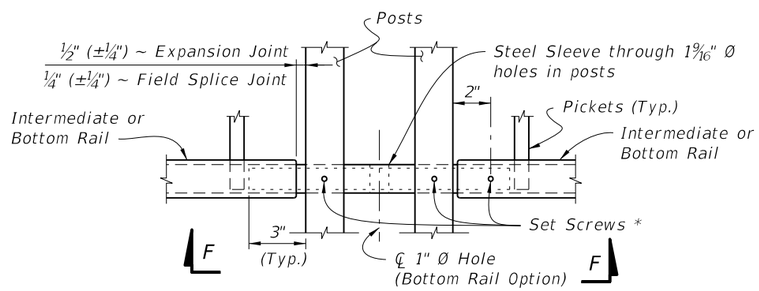

SQUARE RAILS - INTERMEDIATE OR BOTTOM RAIL
(Bottom Rail Shown at Expansion Joint Shown)

DETAIL "B" - EXPANSION JOINT (FIELD SPLICE SLIP JOINT SIMILAR)

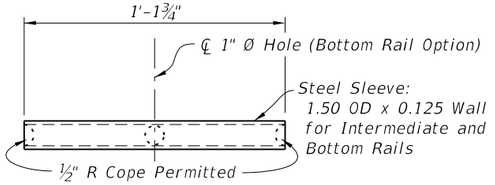

VIEW F-F
INTERMEDIATE OR BOTTOM RAIL -
STEEL SLEEVE DETAIL (Bottom Side Shown)

CROSS REFERENCE:

For location of Details "B", See Sheet 2.

C:\d\projects\standards\structures\2013book\00852-4of8.dgn
rd960rh
2:11:26 PM
6/28/2012

LAST REVISION	REVISION	DESCRIPTION:			INDEX NO.	SHEET NO.
07/01/12			FDOT DESIGN STANDARDS 2013	STEEL PEDESTRIAN/BICYCLE RAILING	852	4

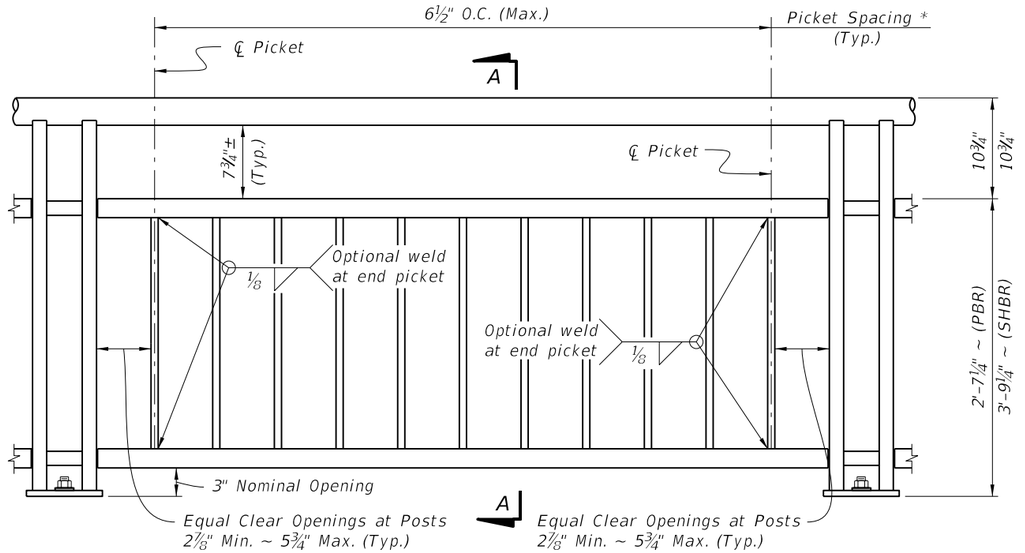

TYPE 1 - PICKET INFILL PANEL

PICKET NOTES:

* Picket Spacing of 6½" centers is based on a ¾" NPS for standard applications. When shown in the Contract Plans a 4½" picket spacing may be required. If an alternate design is used, maintain a maximum clear opening of 5⅛" for standard installations and 3⅞" for special conditions.

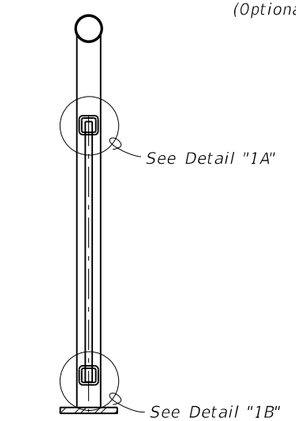

SECTION A-A

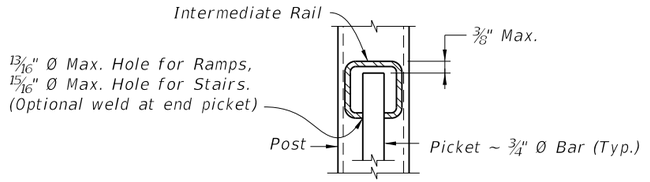

DETAIL "1A"
(Top of Picket Connection)

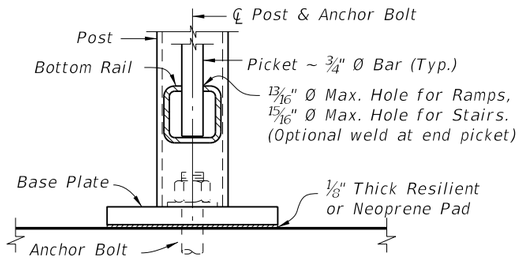

DETAIL "1B"
(Bottom of Picket Connection)

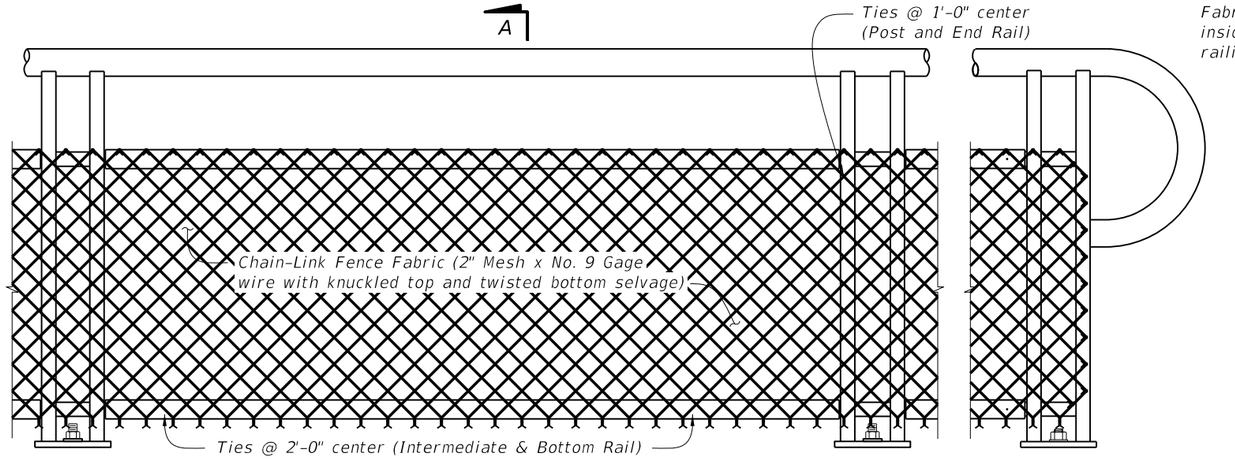

TYPE 2 - CHAIN-LINK (Continuous Infill Panel)

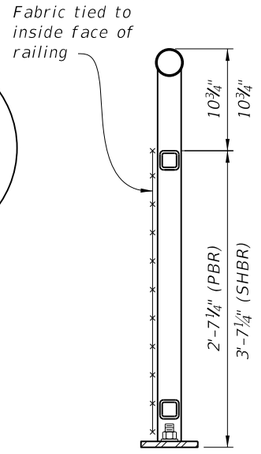

SECTION A-A

TABLE 2 - CHAIN-LINK PANEL COMPONENT MATERIALS		
COMPONENT	ASTM	COMPONENT INFORMATION
Chain-Link Fence Fabric (2" mesh with twisted bottom and knuckled top selvage)	A 392	Zinc-Coated Steel – No. 9 gage (coated wire diameter), Class 2 Coating
	A 491	Aluminum-Coated Steel – No. 9 gage (coated wire diameter)
	F 668	Polyvinyl Chloride (PVC) Coated Steel – No. 9 gage Zinc-Coated Wire (metallic-coated core wire diameter) ~ See Plans for specified color of PVC.
Tie Wires	F 626	Zinc-Coated Steel Wire – No. 9 gage with coating to match Chain-Link Fence Fabric.
Tension Bars	F 626	3⁄16" (Min. thickness) x ¾" (Min. width) x 2'-3' (Min. height) Steel Bars
Miscellaneous Fence Components	F 626	Zinc-Coated Steel

CHAIN-LINK PANEL NOTE:

Chain-Link Fence Fabric shall be continuous along limits of railing. Splicing of Chain-Link panels using Tension Bars at 20'-0" minimum increments is permitted.

NOTES:

1. See Plans for Infill Panel option required.

C:\d\projects\standards\structures\2013book\00852-5of8.dgn
rd960rh
2:11:28 PM
6/28/2012

LAST REVISION	REVISION	DESCRIPTION:			INDEX NO.	SHEET NO.
01/01/11			FDOT DESIGN STANDARDS 2013	STEEL PEDESTRIAN/BICYCLE RAILING	852	5

TYPE 3 - SUNSHINE INFILL PANEL

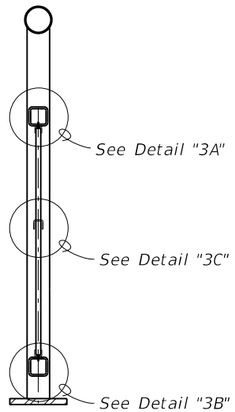

SECTION A-A

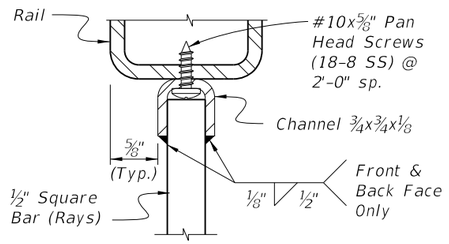

DETAIL "3A"
INTERMEDIATE RAIL/RAY CONNECTION

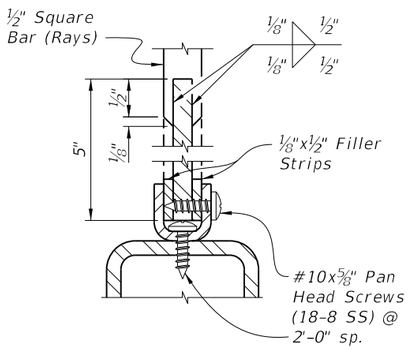

DETAIL "3B"
BOTTOM RAIL/RAY CONNECTION

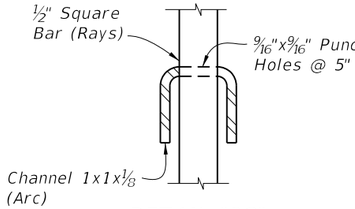

DETAIL "3C"
RAY/ARC CONNECTION

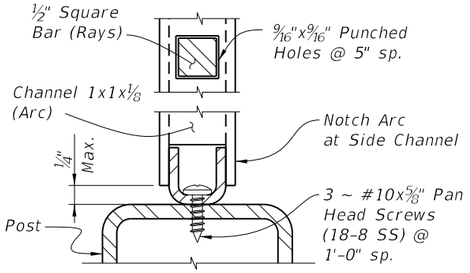

DETAIL "3D"
ARC/POST CONNECTION

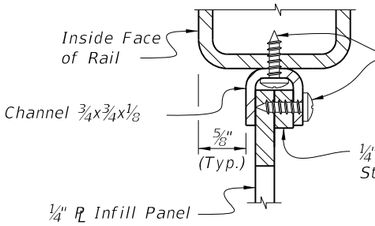

DETAIL "4A"
PANEL/RAIL CONNECTION
(Top Shown, Bottom Similar)

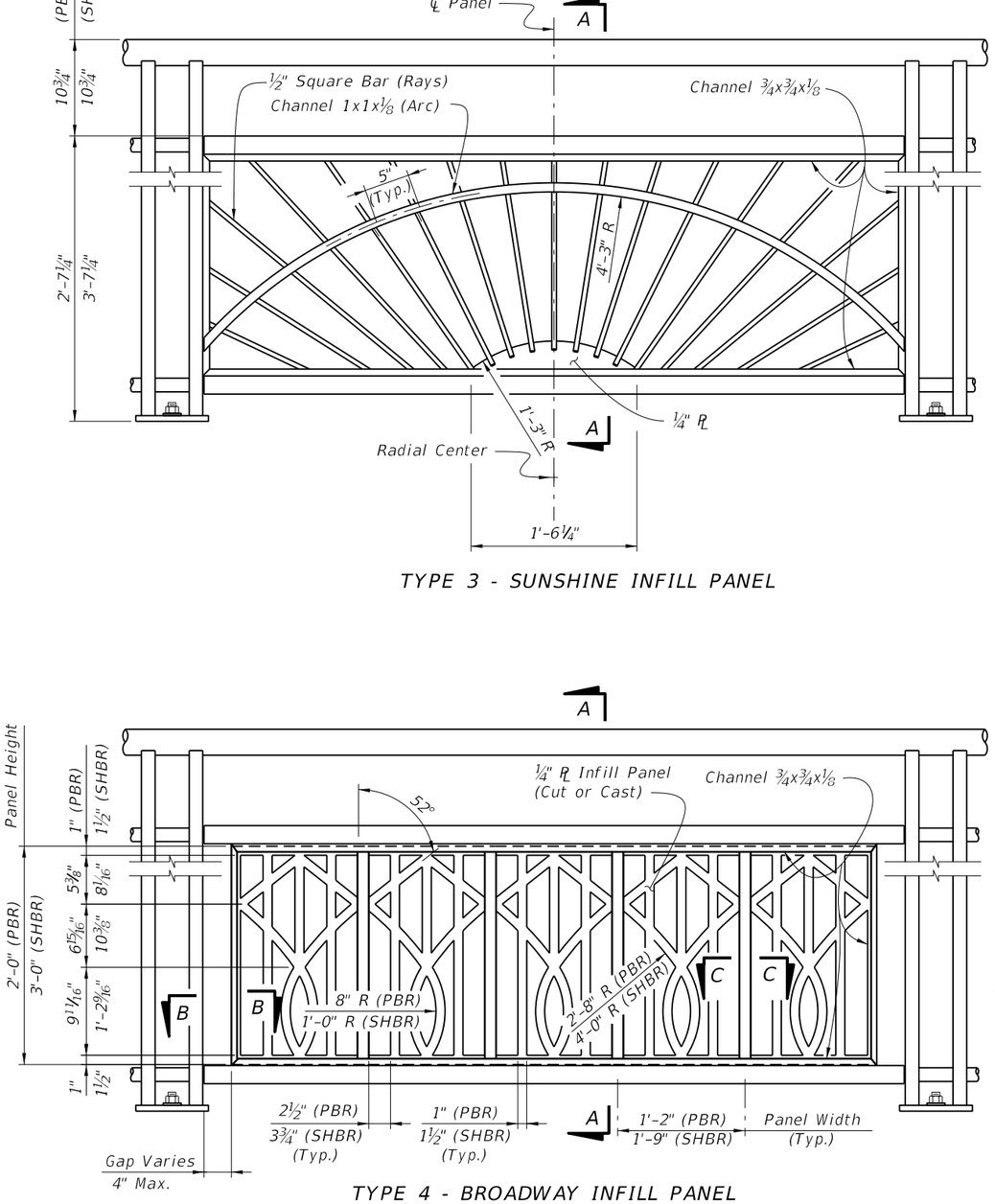

TYPE 4 - BROADWAY INFILL PANEL

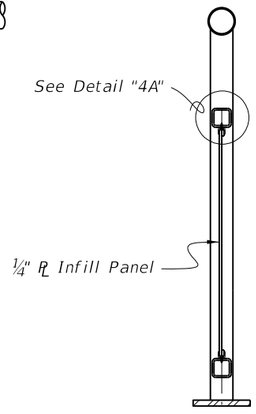

SECTION A-A

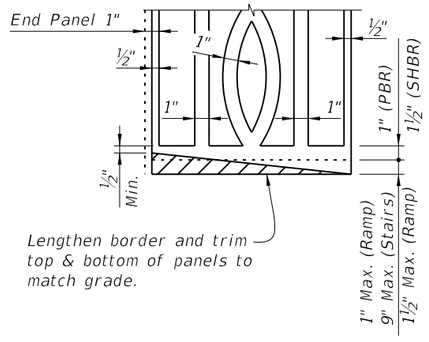

PANEL ADJUSTMENT FOR RAILINGS ON GRADES

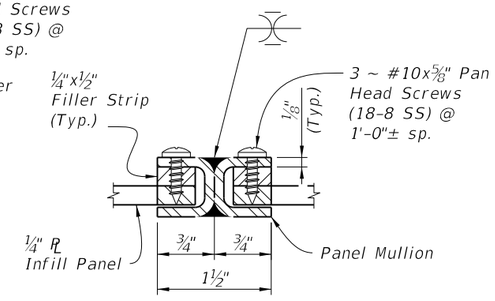

SECTION C-C
PANEL/SPLICE CONNECTION

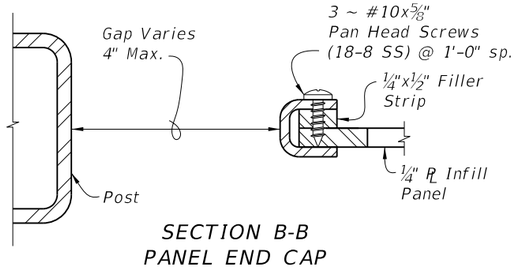

SECTION B-B
PANEL END CAP

NOTES:

1. See Plans for Infill Panel Option required.

C:\d\projects\standards\structures\2013book\00852-6of8.dgn
rd960rh
2:11:30 PM
6/28/2012

LAST REVISION	REVISION	DESCRIPTION:			INDEX NO.	SHEET NO.
01/01/11			FDOT DESIGN STANDARDS 2013	STEEL PEDESTRIAN/BICYCLE RAILING	852	6

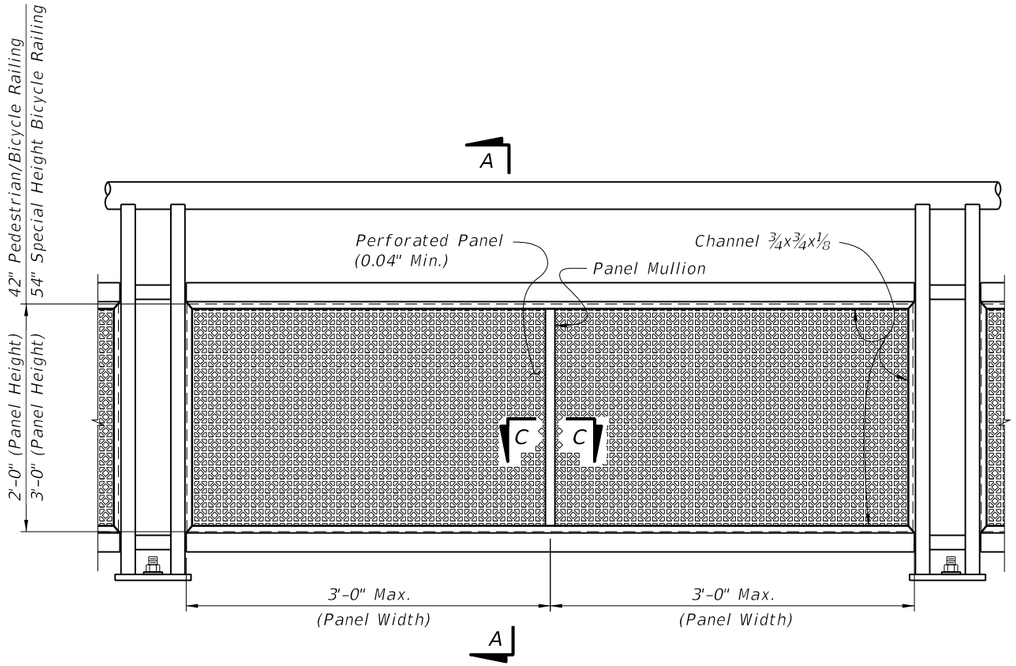

TYPE 5 - PERFORATED INFILL PANEL

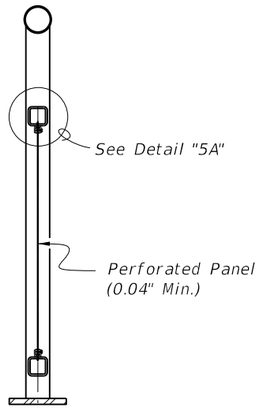

SECTION A-A

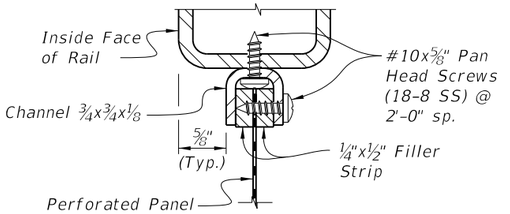

DETAIL "5A"
PANEL/RAIL CONNECTION
(Top Shown, Bottom & Sides Similar)

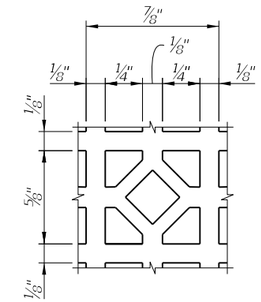

REPEATING PATTERN DETAIL
FOR PEFORATED PANEL

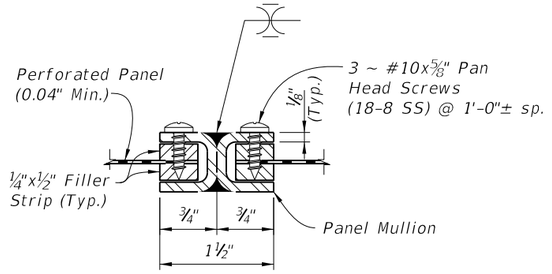

SECTION C-C
PANEL/SPLICE CONNECTION

NOTES:

1. See Plans for Infill Panel Type required.

6/28/2012 2:11:33 PM rd960rh C:\d\projects\standards\structures\2013book\00852-7of8.dgn

LAST REVISION	REVISION	DESCRIPTION:		FDOT DESIGN STANDARDS 2013	STEEL PEDESTRIAN/BICYCLE RAILING	INDEX NO.	SHEET NO.
01/01/11						852	7

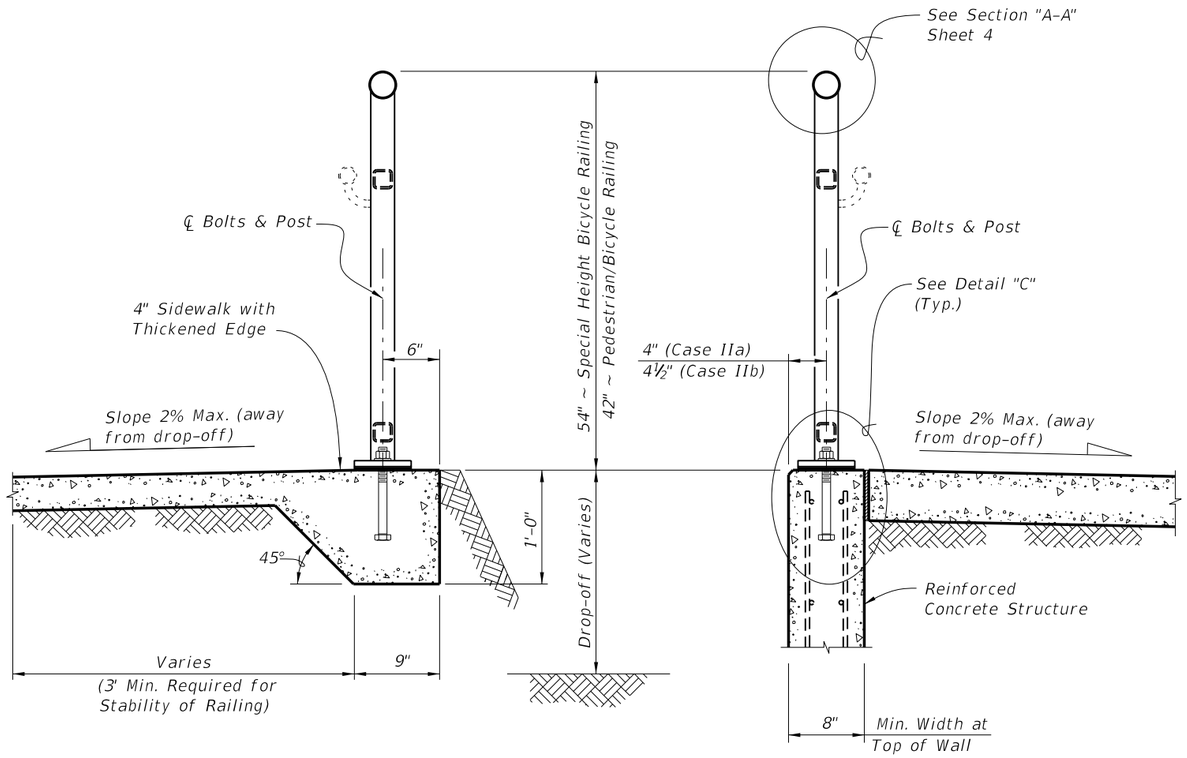

TYPICAL SECTION ON CONCRETE SIDEWALK
(Case I)

TYPICAL SECTION ON RETAINING WALL
(Case II)

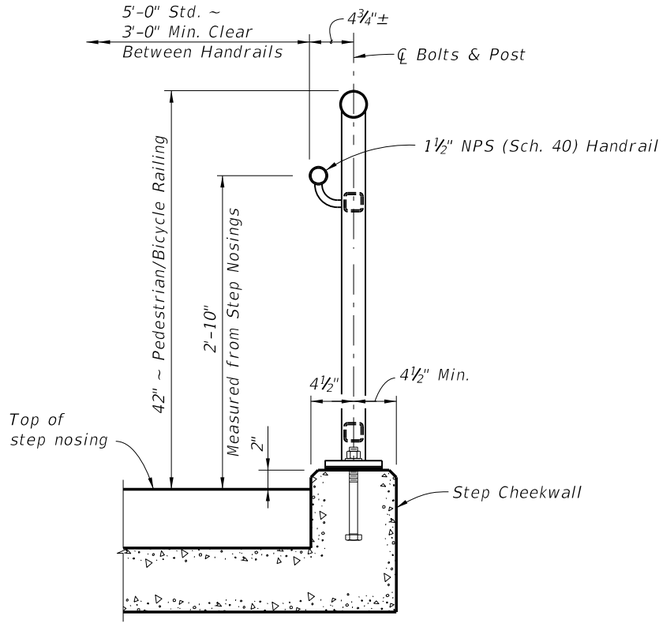

TYPICAL SECTION ON STEPS & STAIRS
(Case III)

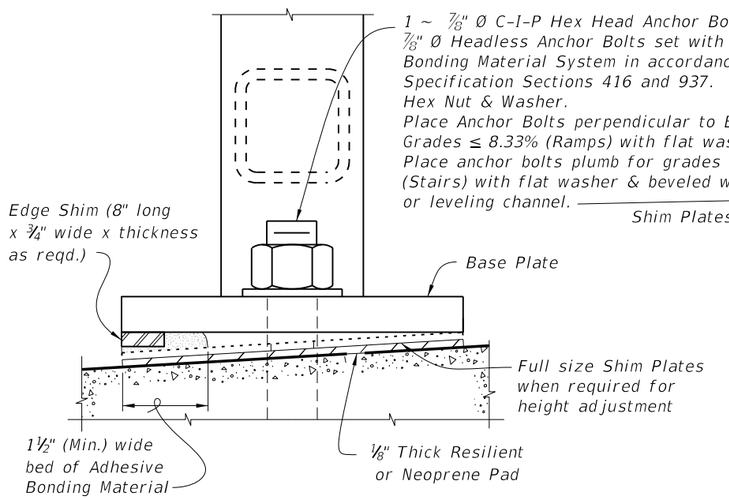

DETAIL "D" (OPTIONAL SHIMMING DETAIL
FOR CROSS SLOPE CORRECTION)
(Used in lieu of Beveled Shim Plates)

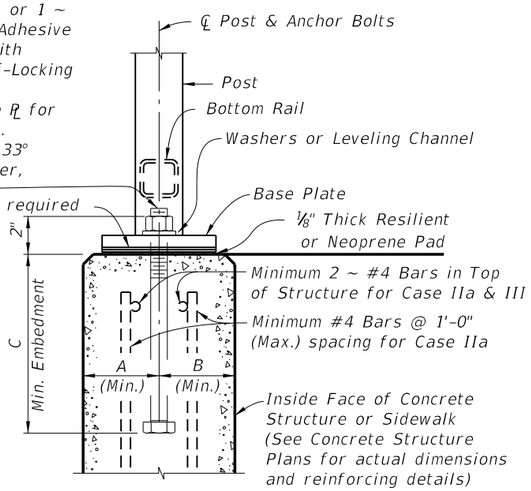

DETAIL "C"
(Cast-In-Place Anchor Bolts shown,
Adhesive Anchors similar)

ANCHOR BOLT TABLE							
CASE	STRUCTURE TYPE	DIMENSIONS			ANCHOR LENGTH		ANCHOR SIZE
		A Edge Dist.	B Edge Dist.	C Embedment	C-I-P Hex Head Bolt	Adhesive Anchor	
I	Unreinforced Concrete	6"	1'-2"	9"	10½"	11"	⅞" Ø
IIa	Reinforced Concrete	4"	4"	9"	10½"	11"	⅞" Ø
IIb	Gravity Wall Index No. 6011	4½"	3½" @ top	1'-0" *	1'-1½"	1'-2"	⅞" Ø
III	Step Cheekwall	4½"	4½"	9"	10½"	11"	⅞" Ø

* Embedment length "C" may be reduced to 9" for the 42" height railings for Case IIb, when the post spacing does not exceed 5'-0".

C:\d\projects\standards\structures\2013book\00852-8of8.dgn
rd960rh
2:11:36 PM
6/28/2012

LAST REVISION	REVISION	DESCRIPTION:				
07/01/12			FDOT DESIGN STANDARDS 2013	STEEL PEDESTRIAN/BICYCLE RAILING	INDEX NO. 852	SHEET NO. 8

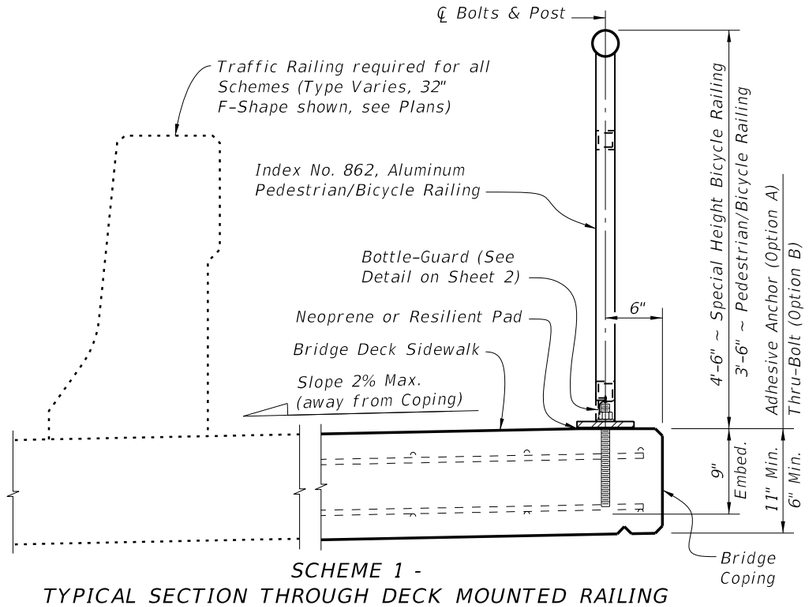

SCHEME 1 -
TYPICAL SECTION THROUGH DECK MOUNTED RAILING
(Adhesive Anchor Option shown - SCHEME 1A)

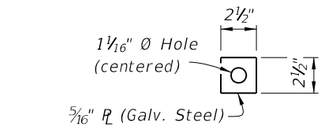

THRU-BOLT PLATE WASHER DETAIL

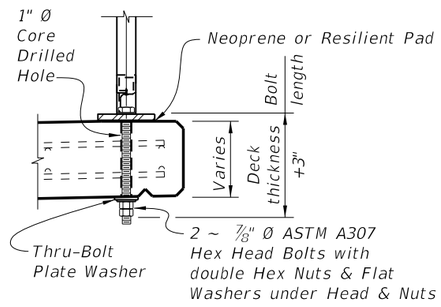

SCHEME 1B - DETAILS
(Thru-Bolt Option)

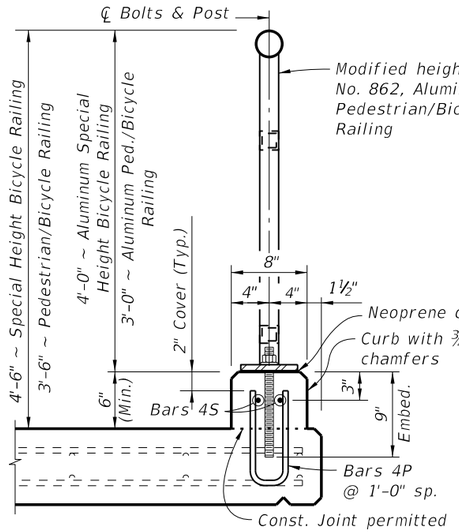

SCHEME 2 -
TYPICAL SECTION THROUGH
CURB MOUNTED RAILING

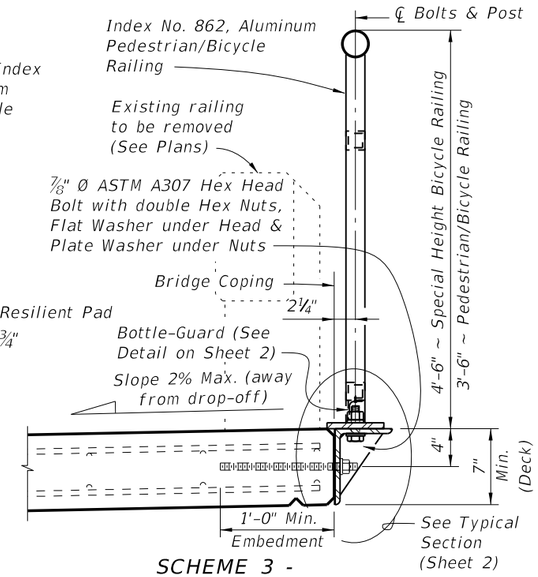

SCHEME 3 -
TYPICAL SECTION THROUGH
SIDE MOUNTED RAILING (RETROFIT)

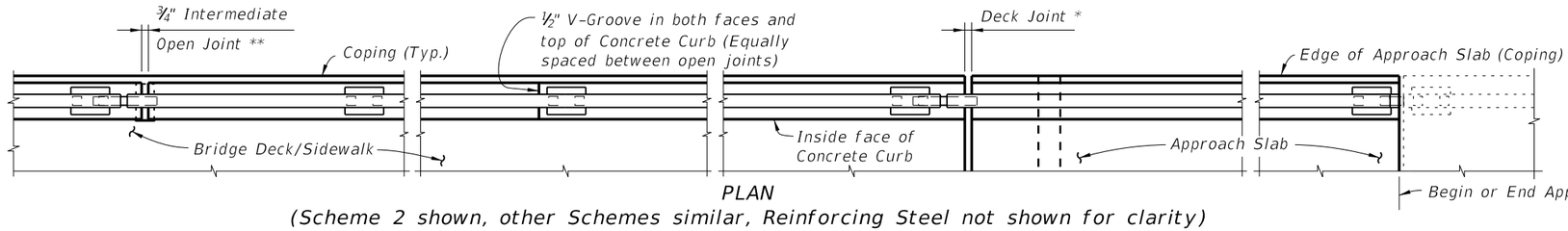

PLAN
(Scheme 2 shown, other Schemes similar, Reinforcing Steel not shown for clarity)

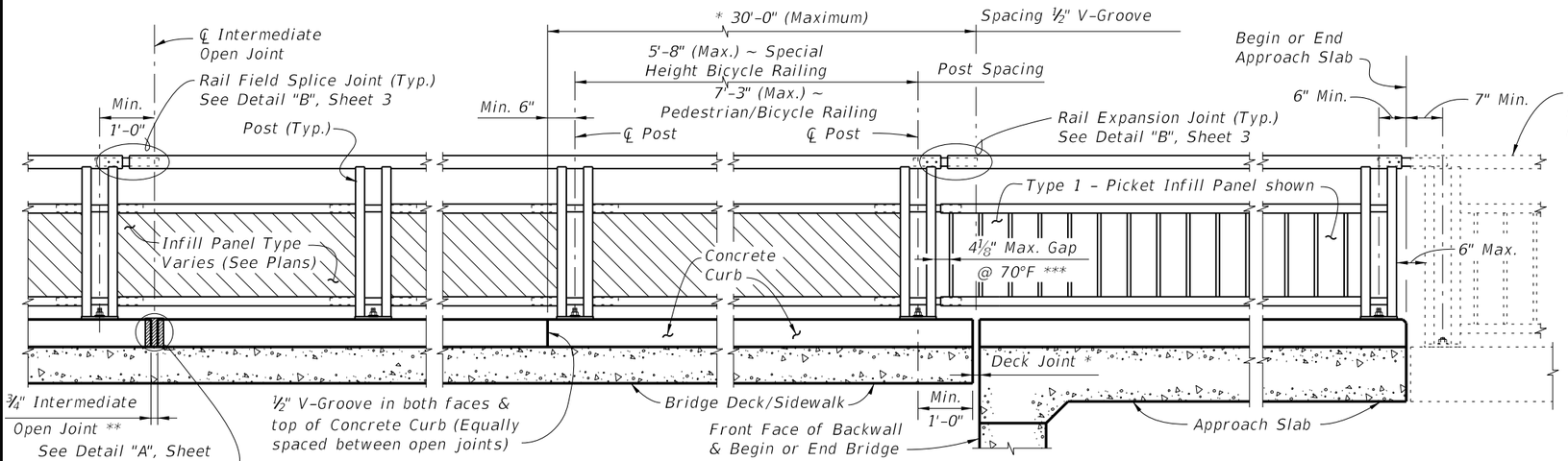

ELEVATION OF INSIDE FACE OF RAILING
(Scheme 2 shown with Post "A", other Schemes similar, Reinforcing Steel not shown for clarity)

* See Structures Plans, Superstructure Sheets for actual dimensions and joint orientation. Open Curb Joints at Deck Expansion Joint locations shall match the dimension of the Deck Joint. For treatment of Railings on skewed bridges see Index No. 420. Deck Joint at Begin Bridge or End Bridge shown. Deck Joint at ℄ Pier or Intermediate Bent similar.

** ¾" Intermediate Open Joints shall be provided at locations coinciding with ¾" Joints for the Traffic Railing.

*** Clear opening between adjacent pickets or panel at Rail Expansion Joints, above Deck Expansion Joints with a total thermal movement greater than 4", must be reduced to 3½".

C:\d\projects\standards\structures\2013book\00861-1of3.dgn
rd960rh
2:11:40 PM
6/28/2012

LAST REVISION	REVISION	DESCRIPTION:				
01/01/12			FDOT DESIGN STANDARDS 2013	BRIDGE PEDESTRIAN/BICYCLE RAILING (ALUMINUM)	INDEX NO. 861	SHEET NO. 1

ALTERNATE REINFORCING (WELDED WIRE REINF.) DETAILS

NOTE: Place wire panels to minimize the end overhang. End Overhangs greater than 4¾" are not permitted.

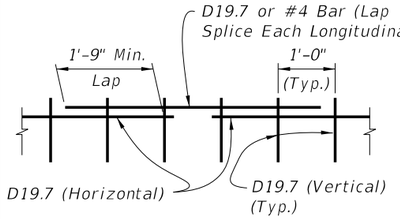

SPLICE DETAIL
(Between WWR Sections)

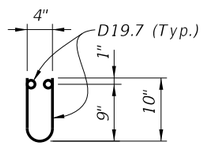

WELDED WIRE REINFORCEMENT (WWR)

CONVENTIONAL REINFORCING STEEL BENDING DIAGRAMS

BILL OF REINFORCING STEEL

MARK	SIZE	LENGTH
P	4	2'-0"
S	4	As Reqd.

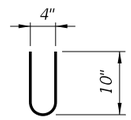

BAR 4P

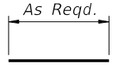

BAR 4S

CURB REINFORCING STEEL NOTES:

1. All bar dimensions in the bending diagrams are out to out.
2. The reinforcement for the curb on a retaining wall shall be the same as detailed for an 8" deck.
3. All reinforcing steel at the open joints shall have a 2" minimum cover.
4. Bars 4S may be continuous or spliced at the construction joints. Bar splices for Bars 4S shall be a minimum of 1'-9".
5. At the option of the Contractor Welded Wire Reinforcement (WWR) may be used in lieu of all Bars 4P and 4S. Welded Wire Reinforcement shall conform to ASTM A497.

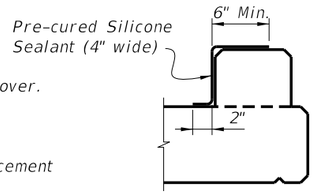

DETAIL "A" - SECTION
AT INTERMEDIATE OPEN JOINT

INTERMEDIATE JOINT SEAL NOTE:

At Intermediate Open Joints, seal the lower 6" portion of the open joint with Pre-cured Silicone Sealant in accordance with Specification Section 932. Apply sealant prior to any Class V finish coating and remove all curing compound and loose material from the surface prior to application of bonding agent.

ESTIMATED CONCRETE CURB QUANTITIES (SCHEME 2)

ITEM	UNIT	QUANTITY
Concrete	CY/LF	0.0124
Reinforcing Steel	LB/LF	4.01

SCHEME 2 - CONCRETE CURB DETAILS

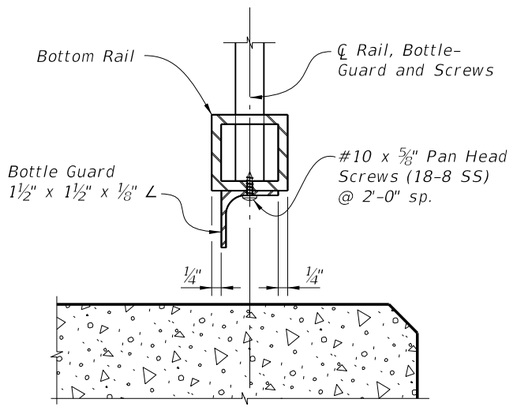

TYPICAL SECTION THROUGH BOTTOM RAIL
(Post Not Shown for Clarity)

SCHEME 1 - BOTTLE GUARD DETAIL

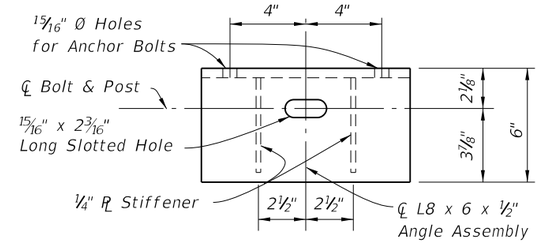

PLAN VIEW

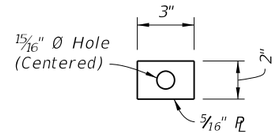

PLATE WASHER DETAIL

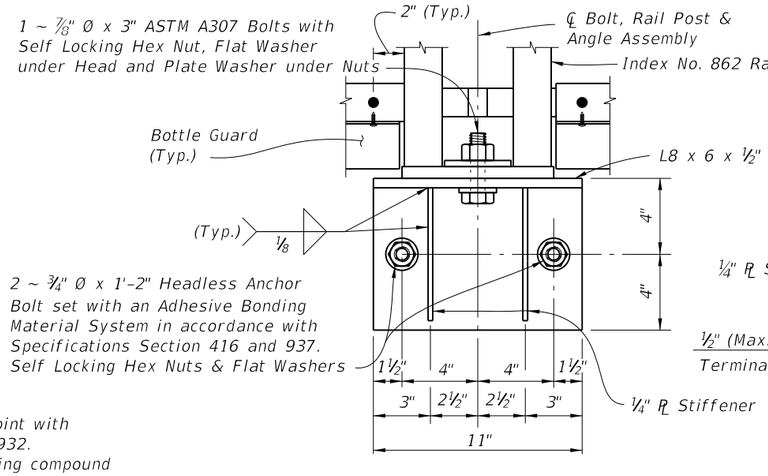

ELEVATION VIEW

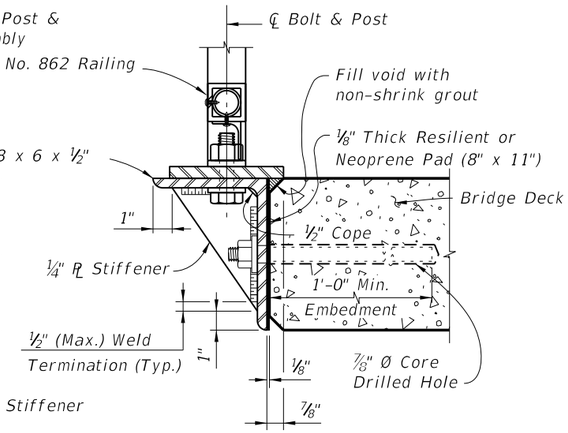

TYPICAL SECTION

SCHEME 3 - SIDE-MOUNTED SUPPORT BRACKET DETAILS

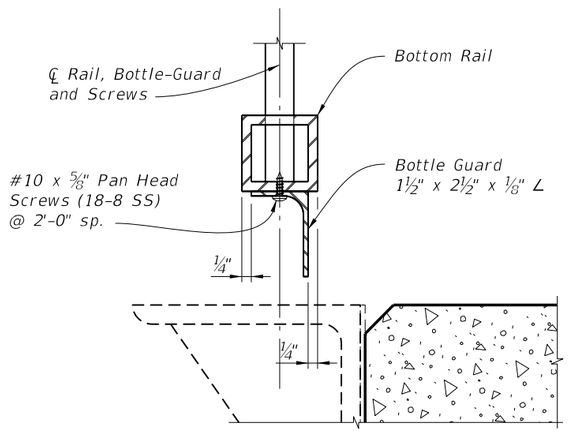

TYPICAL SECTION THROUGH BOTTOM RAIL
(Post Not Shown for Clarity)

SCHEME 3 - BOTTLE GUARD DETAIL

CROSS REFERENCE:

See Sheet 3 for Bridge Railing Notes.

LAST REVISION	REVISION	DESCRIPTION:		FDOT DESIGN STANDARDS 2013	BRIDGE PEDESTRIAN/BICYCLE RAILING (ALUMINUM)	INDEX NO.	SHEET NO.
01/01/11						861	2

C:\d\projects\standards\structures\2013book\00861-2of3.dgn
rd960rh
2:11:43 PM
6/28/2012

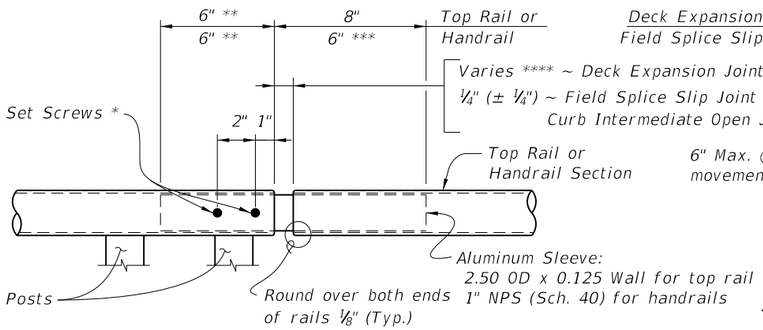

ROUND RAILS - TOP RAIL OR HANDRAIL

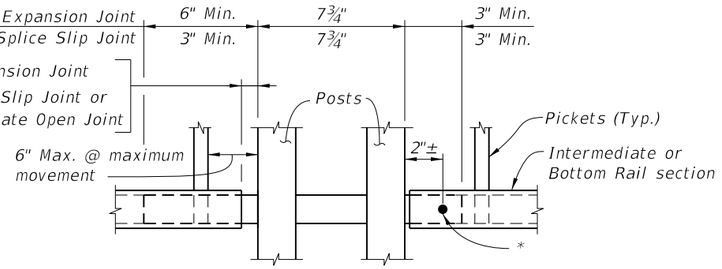

SQUARE RAILS - INTERMEDIATE OR BOTTOM RAIL

* ¼" Ø x ¾" Pan Head Aluminum (Alloy 7075-T73) or Stainless Steel (Type 316 or 18-8 Alloy) Set Screws along outside face of railing. Set screws must be set flush against the rail surface. A ¾" Ø plug weld may be substituted for the two set screws at expansion joints.

** Embedded length may be 4" for plug welded connection.

*** Increase handrail sleeve embedment to 8" for Expansion Joint openings greater than 2".

**** Expansion Joint opening shall match the clear opening in the deck joint but not greater than 3".

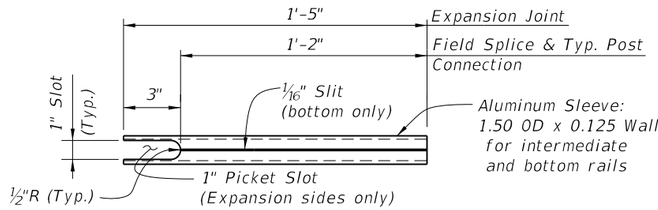

INTERMEDIATE OR BOTTOM RAIL - ALUMINUM SLEEVE DETAIL (Bottom Side Shown)

DETAIL "B" EXPANSION JOINT (FIELD SPLICE SIMILAR)

BRIDGE RAILING NOTES:

APPLICABILITY NOTE: Railing is limited to use on bridges with an expansion joint thermal movements not exceeding 5". Scheme 3 is limited to bridge retrofit applications where additional sidewalk width is required.

RAILING DETAILS: For Railing fabrication and installation details and notes see Index No. 862, except that railing shall be fabricated and installed normal to the Profile Grade longitudinally and vertical transversely, unless otherwise shown in the Contract Plans.

BOTTLE-GUARD (Schemes 1 & 3): L-Shape shall be in accordance with ASTM B209, Alloy 6063-T5 or 6061-T6.

CONCRETE CURB (Scheme 2): Construct concrete curb vertical with the top surface finished level transversely. Concrete class shall be the same as the bridge deck.

SIDE-MOUNTED SUPPORT BRACKET (Scheme 3): L-Shape and Stiffener Plate shall be in accordance with ASTM B209, Alloy 6061-T6. Welding shall be in accordance with the American Society of Structural Welding Code (Aluminum) ANSI/AWS D1.2 (current edition). Filler metal shall be either ER4043, ER5183, ER5356 or ER5556. Nondestructive testing of welds is not required.

PAYMENT: Railing shall be paid per linear foot (Item No. 515-2-abb) for the aluminum railing and include the cost of support brackets (Scheme 3). Concrete and reinforcing steel quantities for the concrete curb (Scheme 2), will be included in the bridge deck plan quantity pay items. Payment will be plan quantity measured as the length along the center line of the top rail, and includes rails, posts, pickets, rail splice assembly, base plates, bottle-guards, anchor bolts, nuts, washers, resilient or neoprene pads and all incidental materials and labor required to complete installation of the railing.

6/28/2012 2:11:45 PM rd960rh C:\d\projects\standards\structures\2013book\00861-3of3.dgn

LAST REVISION	REVISION	DESCRIPTION:		FDOT DESIGN STANDARDS 2013	BRIDGE PEDESTRIAN/BICYCLE RAILING (ALUMINUM)	INDEX NO.	SHEET NO.
01/01/11						861	3

3D VIEW OF RAILING WITH TYPE 1 - PICKET INFILL PANEL
(42" Height shown, 54" Height Similar)

TABLE 1 - RAILING MEMBERS				
MEMBER	ALLOY(1)	DESIGNATION	OUTSIDE DIMENSION	WALL THICKNESS
Posts	6061-T6	RT 2x2x.250	2.00" x 2.00"	0.250"
Top Rail	6061-T6	2½" NPS (Sch. 10) 3" Round Top Cap Rail	2.875" 3.000"	0.120" 0.125"
End Hoops	6063-T5	2½" NPS (Sch. 10) 3.00 OD x 0.125 Wall	2.875" 3.000"	0.120" 0.125"
Top Rail Joint/Splice Sleeves	6063-T5	2.50 OD x 0.125 Wall Top Cap Rail Inner Sleeve	2.500" 2.800"	0.125" 0.090"
Intermediate & Bottom Rail	6061-T6	RT 2x2x.250	2.00" x 2.00"	0.250"(2)
Int. & Bottom Rail Post Connection Sleeve	6063-T5	1.50 OD x 0.125 Wall	1.500"	0.125"
Handrail Joint/Splice Sleeves	6063-T5	1" NPS (Sch. 40)	1.315"	0.133"
Handrails	6061-T6	1½" NPS (Sch. 40)	1.900"	0.145"
Handrail Support Bar	6061-T6	¾" Ø Round Bar	0.750"	N/A
Pickets (Type 1 Infill Panel)	6061-T6	¾" Ø Round Bar	0.750"	N/A
Infill Panel Members (Types 2 – 5)	6063-T5	Varies (See Details)	Varies	Varies

TABLE 1 NOTES:
(1) Alloy 6061-T6 or 6063-T52 & T6 may be substituted for Alloy 6063-T5.
(2) 0.188" wall thickness permitted for rails with post spacings less than 5'-9".

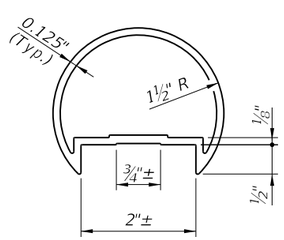

3" ROUND TOP CAP RAIL

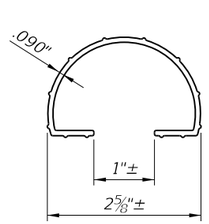

TOP CAP RAIL INNER SPLICE SLEEVE

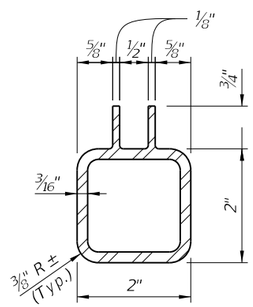

ALTERNATIVE BOTTOM & INTERMEDIATE RAIL SECTION FOR TYPE 3, 4 & 5 RAILINGS

ALTERNATE TOP RAIL SECTION

NOTES

DESIGN LOADS, GEOMETRY AND APPLICABILITY:
See the Instructions for Design Standards for the design loads, geometry and applicability requirements.

GENERAL:
Adequate foundation support shall be provided for anchorage and stability against overturning. See Index No. 861 for special requirements and modifications for use on bridges. The railing shown on these drawings requires a handrail for ramps steeper than a 5% grade to conform with the requirements of the Americans with Disabilities Act (ADA).

RAILS, PANELS AND POSTS:
Structural Extrusions, Tube, Pipe and Bar shall be in accordance with Table 1 and ASTM B221 or ASTM B429. Top, bottom and intermediate rail corner bends with maximum 4'-0" post spacing, may be Alloy 6063-T6. Perforated panels (Type 5) shall be Alloy 3003-H14. Posts shall be fabricated and installed plumb, ± 1" tolerance when measured at 3'-6" above the foundation. Pickets and vertical panel elements shall be fabricated parallel to the posts, except that Type 2, 3 & 5 panel infills may be fabricated parallel to the longitudinal grade. Corners and changes in tangential longitudinal alignment shall be made continuous with a 9" bend radius or terminate at adjoining sections with mitered end sections when handrails are not required. For changes in tangential longitudinal alignment greater than 45°, posts shall be positioned at a maximum distance of 2'-0" each side of the corner and shall not be located at the corner apex. For curved longitudinal alignments the top and bottom rails and handrails shall be shop bent to match the alignment radius.

BASE PLATES AND RAIL CAPS:
Base Plates and Post Cap plates shall be in accordance with ASTM B209, Alloy 6061-T6.

SHIM PLATES:
Shim Plates shall be aluminum in accordance with ASTM B209, Alloy 6061 or 6063. Shim plates shall be used for foundation height adjustments greater than ¼" and localized irregularities greater than ⅛". Field trim shim plates when necessary to match the contours of the foundation. Beveled shim plates may be used in lieu of trimmed flat shim plates shown. Stacked shim plates must be bonded together with adhesive bonding material and limited to a maximum total thickness of ½", unless longer anchor bolts are provided for the exposed thread length.

ANCHOR BOLTS:
Anchor bolts shall be in accordance with ASTM F1554 Grade 36. Headless anchor bolts for Adhesive Anchors shall be threaded full length. Cutting of reinforcing steel is permitted for drilled hole installation. Expansion Anchors are not permitted. All anchor bolts shall have single self-locking hex nuts. Tack welding of the nut to the anchor bolt may be used in lieu of self-locking nuts. All nuts shall be in accordance with ASTM A563 or ASTM A194. Flat Washers shall be in accordance with ASTM F436 and Plate Washers (for long slotted holes only), shall be in accordance with ASTM A36 or ASTM A709 Grade 36. After the nuts have been snug tightened, the anchor bolt threads shall be distorted to prevent removal of the nuts. Distorted threads and tack welds shall be coated with a galvanizing compound in accordance with the Specifications.

RESILIENT AND NEOPRENE PADS:
Resilient and Neoprene pads shall be in accordance with Specification Section 932 except that testing of the finished pads shall not be required. Neoprene pads shall be durometer hardness 60 to 80.

JOINTS:
All welded joints are to be ground smooth. Expansion joints shall be spaced at a maximum 35'-0". Field splices similar to the expansion joint detail may be approved by the Engineer to facilitate handling, but top rail must be continuous across a minimum of two posts.

WELDING:
All welding shall be in accordance with the American Welding Society Structural Welding Code (Aluminum) ANSI/AWS D1.2 (current edition). Filler metal shall be either ER5183, ER5356 or ER5556. Nondestructive testing of welds is not required. Filler metal for plug welds and bend splices may be ER4043.

COATINGS:
The aluminum railing shall be mill finish unless otherwise noted in the Contract Documents. All nuts, bolts and washers shall be hot-dip galvanized in accordance with Specification Section 962.

SHOP DRAWINGS:
Complete details addressing project specific geometry (line & grade) showing post and expansion joint locations, post and panel type, anchor bolt installation "Case" or lengths, must be submitted by the Contractor for the Engineer's approval prior to fabrication of the railing. Shop drawings shall be in accordance with the Specifications.

PAYMENT:
Railing shall be paid for per linear foot (Item No. 515-2-abb). Payment will be plan quantity measured as the length along the center line of the top rail, and includes rails, posts, pickets, panels, rail splice assembly, base plates, anchor bolts, nuts, washers, resilient or neoprene pads and all incidental materials and labor required to complete installation of the railing.

C:\d\projects\standards\structures\current\ready4release\2013book\00862-1of8.dgn rd960rh 10:10:36 AM 5/21/2012

LAST REVISION	REVISION	DESCRIPTION:				
01/01/12			FDOT DESIGN STANDARDS 2013	ALUMINUM PEDESTRIAN/BICYCLE RAILING	INDEX NO. 862	SHEET NO. 1

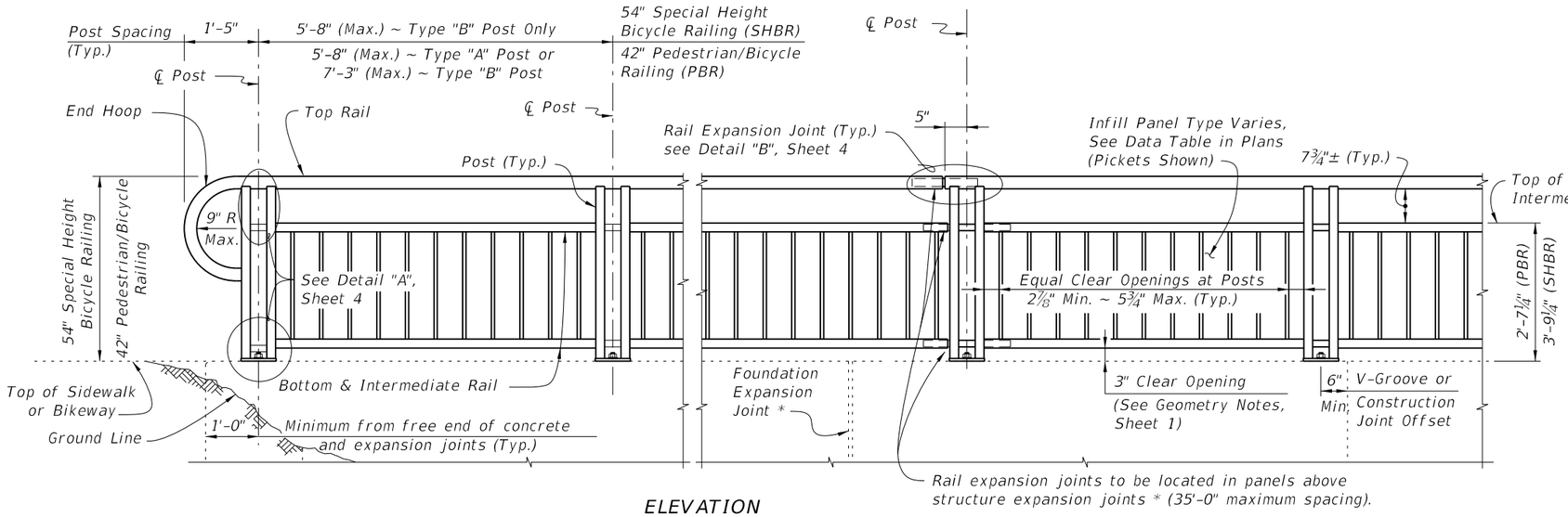

ELEVATION
(Showing Outside Face of Railing with Type "A" Posts)

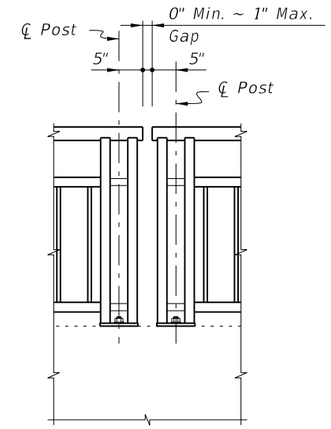

Note: Non-continuous corners are permitted when handrails are not required.

EXPANDED ELEVATION AT CORNERS

TYPICAL RAILING DETAILS & RAILINGS ON GRADES 0% TO 5%

(Type 1 - Picket Railing Shown, Other Types Similar)

DETAIL FOR NON-CONTINUOUS RAILING AT CORNERS

NOTES:
* Keyed construction joints in Index No. 6011 Gravity Wall are not considered to be expansion joints.

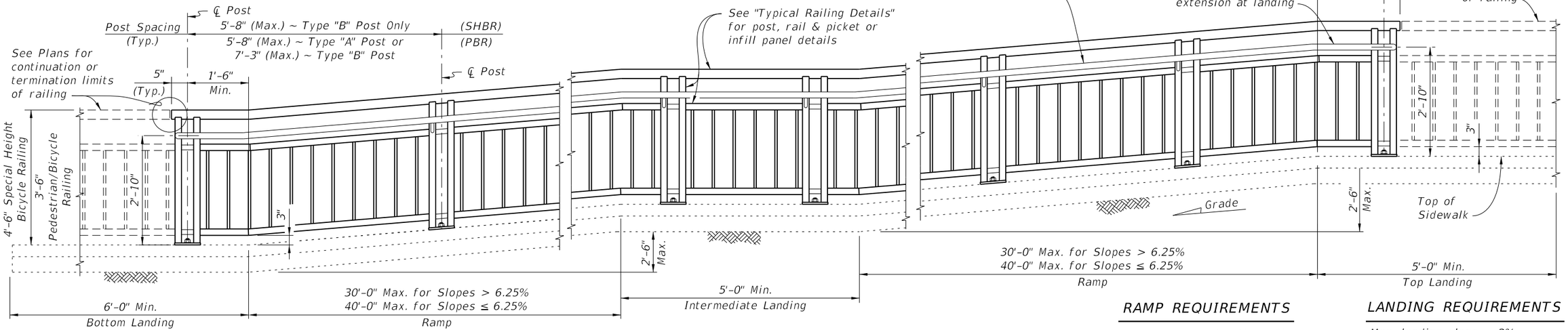

ELEVATION
(Showing Inside Face of Railing with Type "A" Posts)

RAMP REQUIREMENTS

For slopes greater than 5%:
Max. ramp slope = 8.33%
Max. ramp cross-slope = 2.0%

LANDING REQUIREMENTS

Max. landing slope = 2%
Max. landing cross-slope = 2%

RAILINGS ON GRADES STEEPER THAN 5%

(Type 1 - Picket Railing Shown, Other Types Similar)

C:\d\projects\standards\structures\2013book\00862-2of8.dgn
rd960rh
2:11:50 PM
6/28/2012

LAST REVISION	REVISION	DESCRIPTION:			INDEX NO.	SHEET NO.
01/01/11			FDOT DESIGN STANDARDS 2013	ALUMINUM PEDESTRIAN/BICYCLE RAILING	862	2

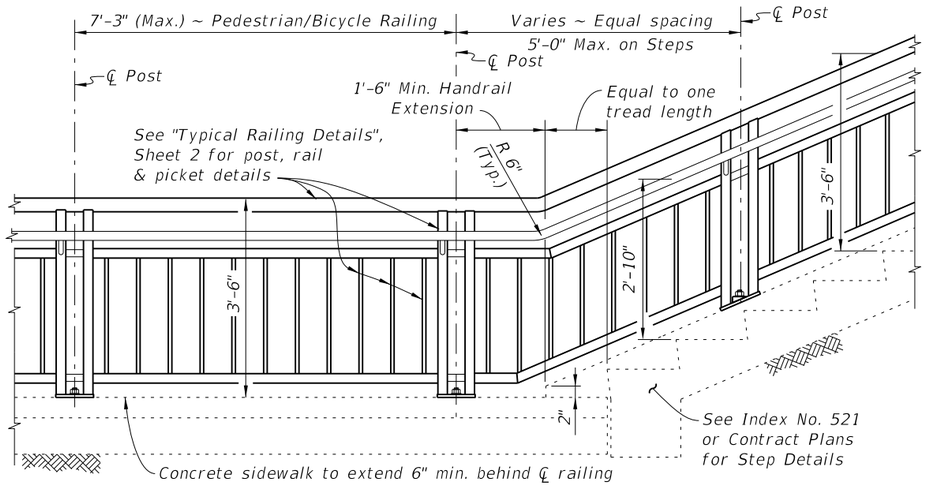

RAILING CONTINUATION BEYOND STEPS OR STAIRS
(Bottom shown, Top similar)

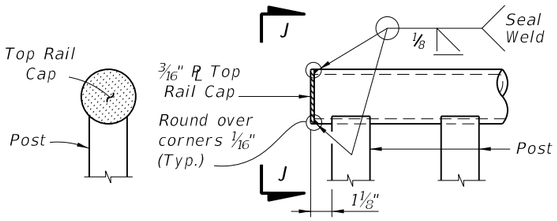

VIEW J-J DETAIL "J" - ELEVATION VIEW TOP RAIL TERMINATION

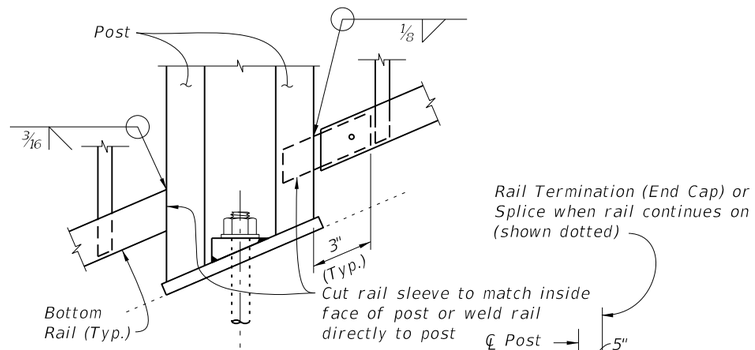

DETAIL "K" - ELEVATION VIEW BOTTOM RAIL CONNECTION

RAIL TERMINATION DETAILS

DETAIL "L" - PLAN VIEW HANDRAIL TERMINATION

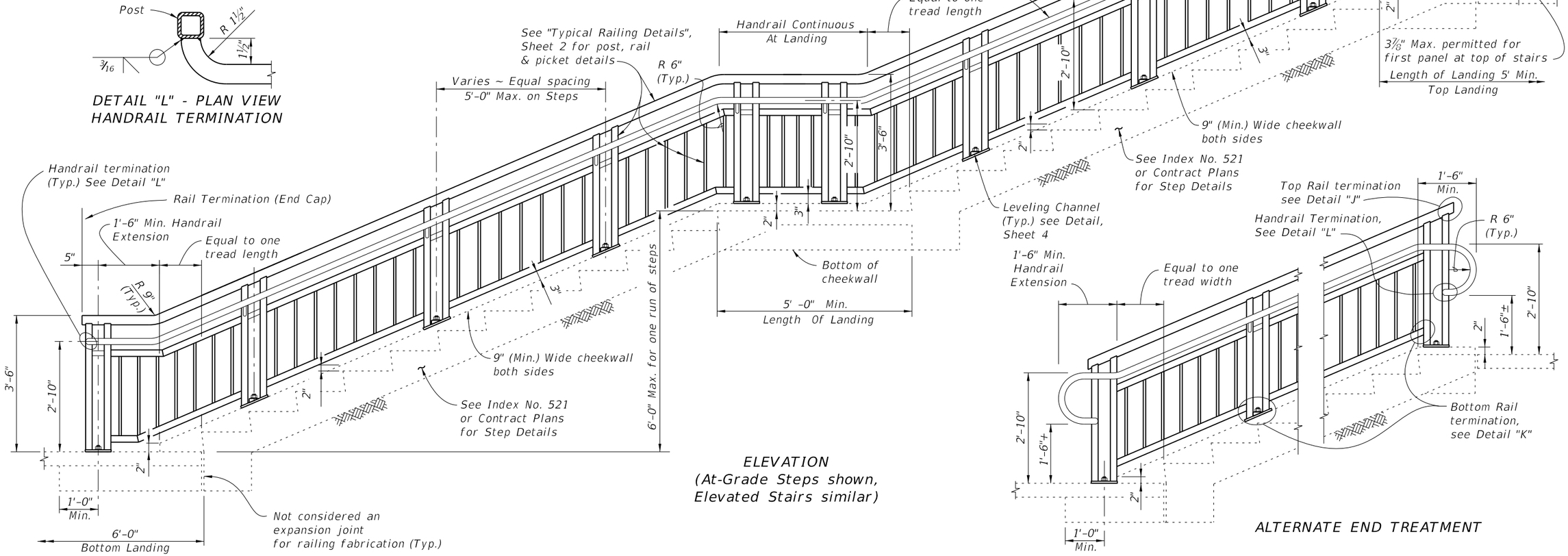

ELEVATION
(At-Grade Steps shown, Elevated Stairs similar)

ALTERNATE END TREATMENT

RAILINGS ON STEPS & STAIRS

LAST REVISION	REVISION	DESCRIPTION:			INDEX NO.	SHEET NO.
01/01/12			FDOT DESIGN STANDARDS 2013	ALUMINUM PEDESTRIAN/BICYCLE RAILING	862	3

6/28/2012 2:11:52 PM rd960rh C:\d\projects\standards\structures\2013book\00862-3of8.dgn

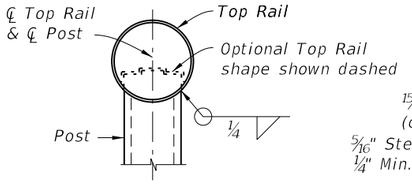

SECTION A-A
(Top Rail Connection)

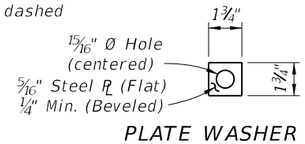

PLATE WASHER
DETAIL

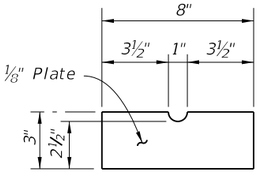

SHIM PLATE DETAIL

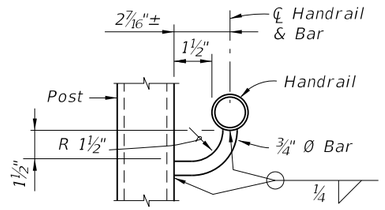

SECTION B-B
(Handrail Connection)

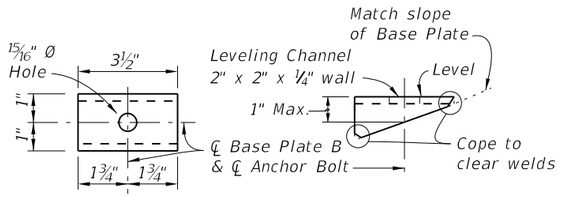

TOP VIEW SIDE VIEW

LEVELING CHANNEL DETAIL

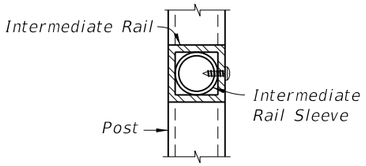

SECTION C-C
(Intermediate Rail Connection)

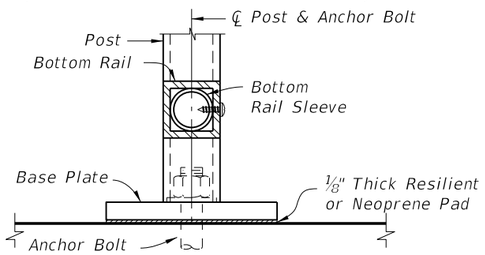

SECTION D-D
(Bottom Rail Connection)

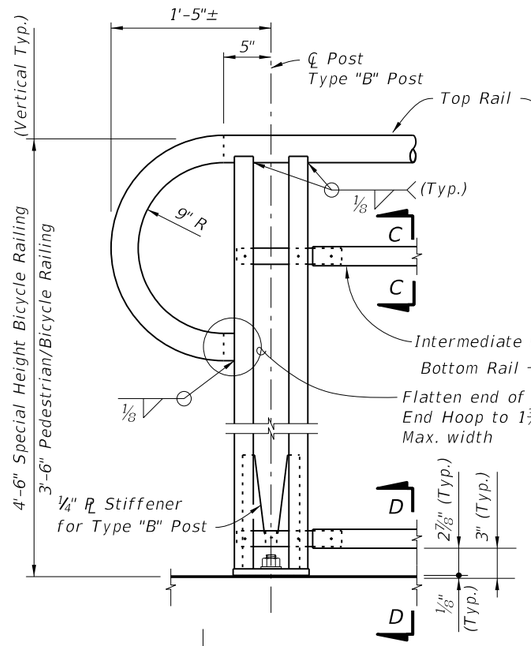

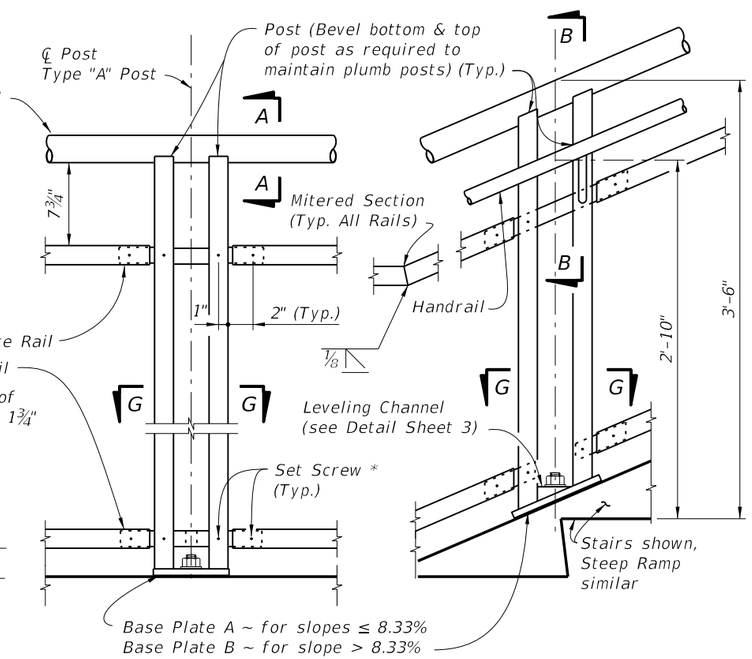

DETAIL "A" - RAIL CONNECTIONS
(Pickets/Panels Not Shown for Clarity)

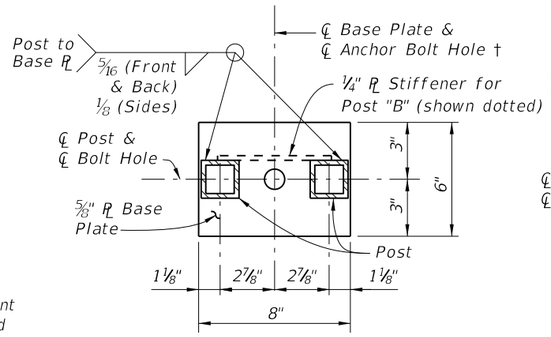

BASE PLATE A

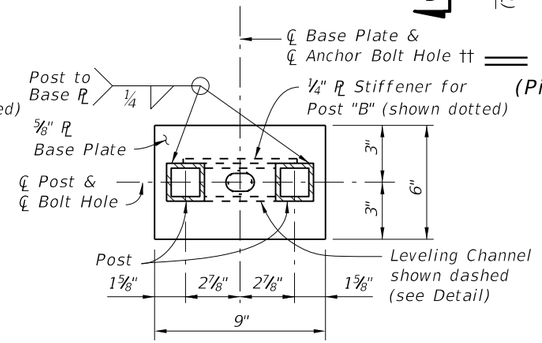

BASE PLATE B

SECTION G-G - BASE PLATE DETAILS

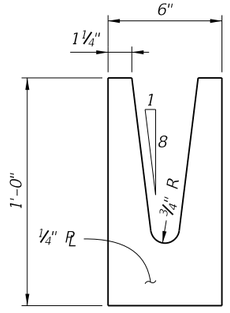

POST "B" STIFFENER
DETAIL

NOTES:

† Base Plate A (Ramps – Bolts normal) use 1 1⁄16" Ø Holes for Anchor Bolts with Flat Washers for slopes ≤ 8.33%.

†† Base Plate B (Stairs – Bolts plumb) use 1¼" Ø Holes for Anchor Bolts with Beveled Plate and Washers for slopes > 8.33% to ≤ 15%; use 15⁄16" x 1½" Slotted Holes with Leveling Channel for slopes > 15%.

* ¼" Ø x ¾" Pan Head Aluminum (Alloy 2024–T4 or 7075–T73) or Stainless Steel (Type 316 or 18–8 Alloy) Set Screws. Screws must be set flush against the outside face of rails & posts and underside of handrails. A single ¾" Ø plug weld may be substituted for the Set Screws.

** Embedded length may be 4" for plug welded connection.

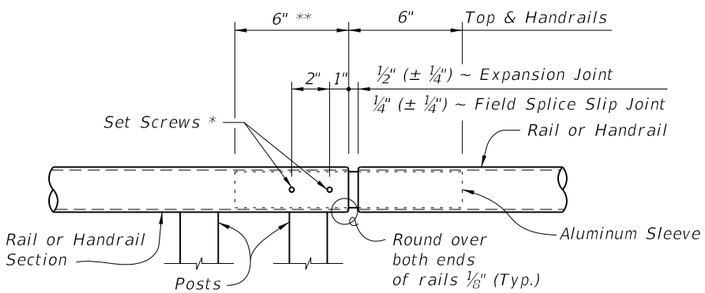

ROUND RAILS - TOP RAIL OR HANDRAIL
(Top Rail at Expansion Joint Shown)

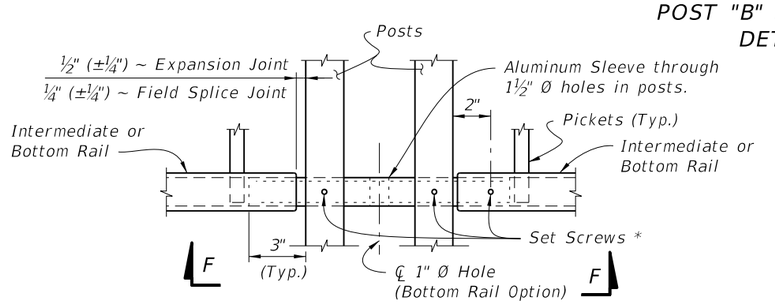

SQUARE RAILS - INTERMEDIATE OR BOTTOM RAIL
(Bottom Rail Shown at Expansion Joint Shown)

DETAIL "B" - EXPANSION JOINT (FIELD SPLICE SLIP JOINT SIMILAR)

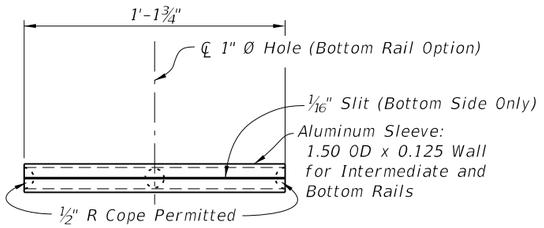

VIEW F-F
INTERMEDIATE OR BOTTOM RAIL -
ALUMINUM SLEEVE DETAIL (Bottom Side Shown)

CROSS REFERENCE:

For location of Details "B", See Sheet 2.

LAST REVISION	REVISION	DESCRIPTION:				
07/01/12			FDOT DESIGN STANDARDS 2013	ALUMINUM PEDESTRIAN/BICYCLE RAILING	INDEX NO. 862	SHEET NO. 4

C:\d\projects\standards\structures\2013book\00862-4of8.dgn
rd960rh
2:11:55 PM
6/28/2012

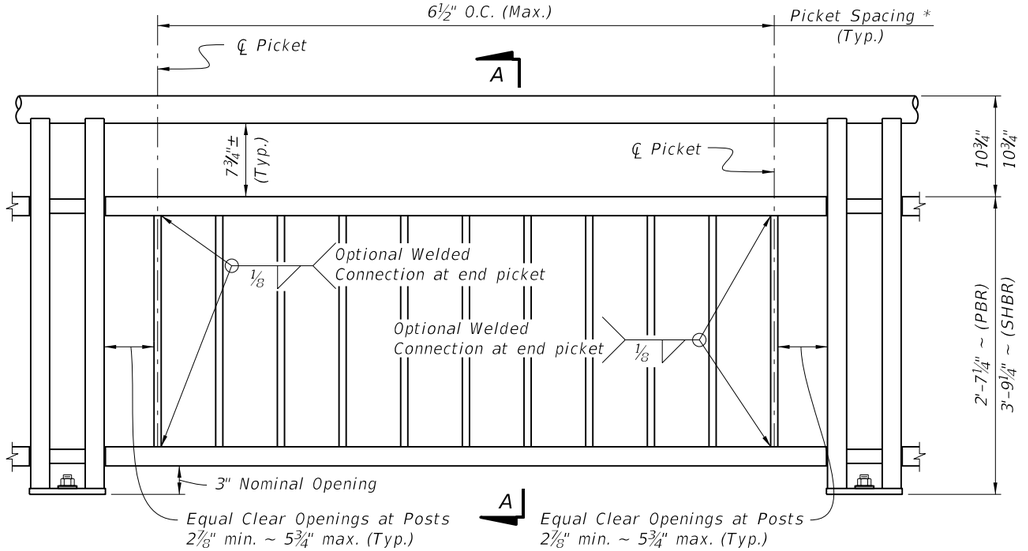

TYPE 1 - PICKET INFILL PANEL

PICKET NOTES:

* Picket Spacing of 6½" centers is based on a ¾" NPS for standard applications. When shown in the Contract Plans a 4½" picket spacing may be required. If an alternate design is used, maintain a maximum clear opening of 5⅛" for standard installations and 3⅞" for special conditions.

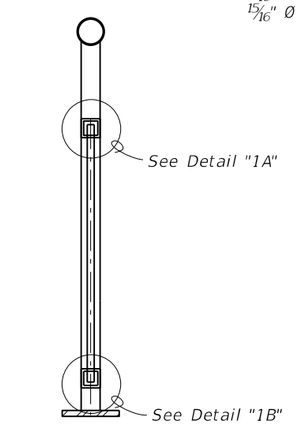

SECTION A-A

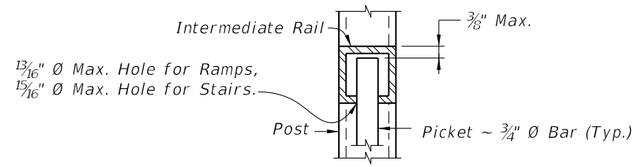

DETAIL "1A"
(Top of Picket Connection)

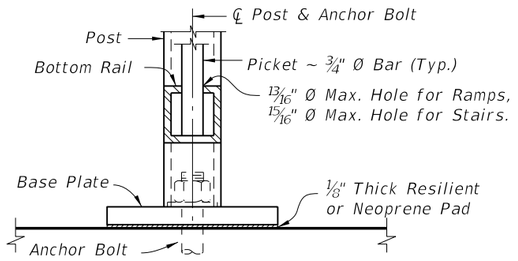

DETAIL "1B"
(Bottom of Picket Connection)

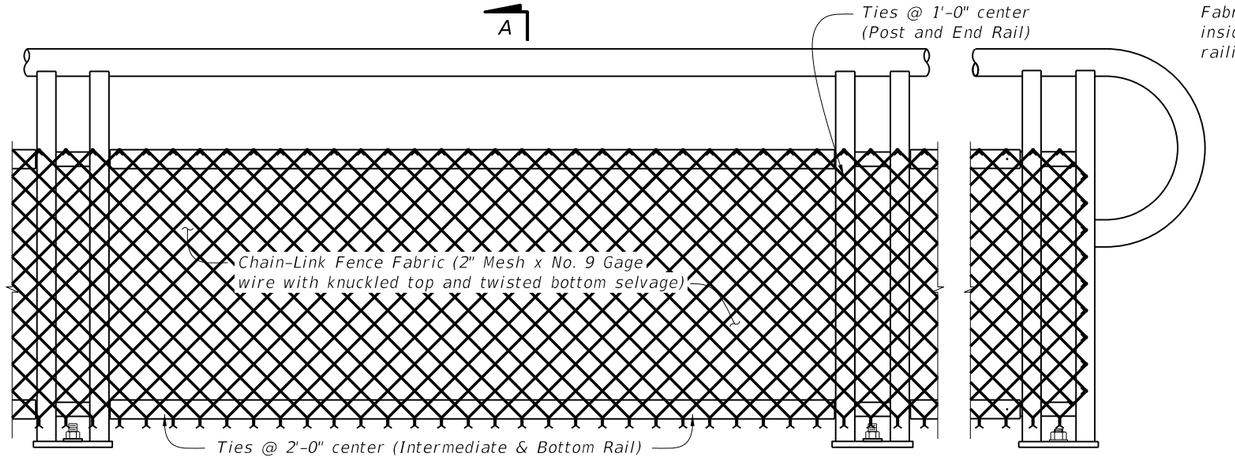

TYPE 2 - CHAIN-LINK (Continuous Infill Panel)

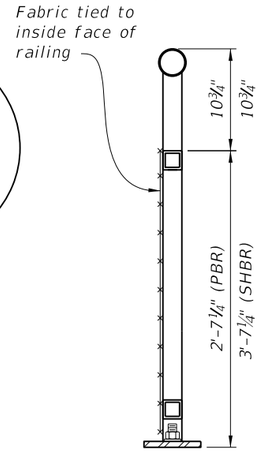

SECTION A-A

NOTES:

1. See Plans for Infill Panel option required.

TABLE 2 - CHAIN-LINK PANEL COMPONENT MATERIALS

COMPONENT	ASTM	COMPONENT INFORMATION
Chain-Link Fence Fabric (2" mesh with twisted bottom and knuckled top selvage)	A 392	Zinc-Coated Steel – No. 9 gage (coated wire diameter), Class 2 Coating
	A 491	Aluminum-Coated Steel – No. 9 gage (coated wire diameter)
	F 668	Polyvinyl Chloride (PVC) Coated Steel – No. 9 gage Zinc-Coated Wire (metallic-coated core wire diameter) ~ See Plans for specified color of PVC.
Tie Wires	F 626	Zinc-Coated Steel Wire – No. 9 gage with coating to match Chain-Link Fence Fabric.
Tension Bars	F 626	3⁄16" (min. thickness) x ¾" (min. width) x 2'-3' (min. height) Steel Bars
Miscellaneous Fence Components	F 626	Zinc-Coated Steel

CHAIN-LINK PANEL NOTE:

Chain-Link Fence Fabric shall be continuous along limits of railing. Splicing of Chain-Link panels using Tension Bars at 20'-0" minimum increments is permitted.

C:\d\projects\standards\structures\2013book\00862-5of8.dgn rd960rh 2:11:57 PM 6/28/2012

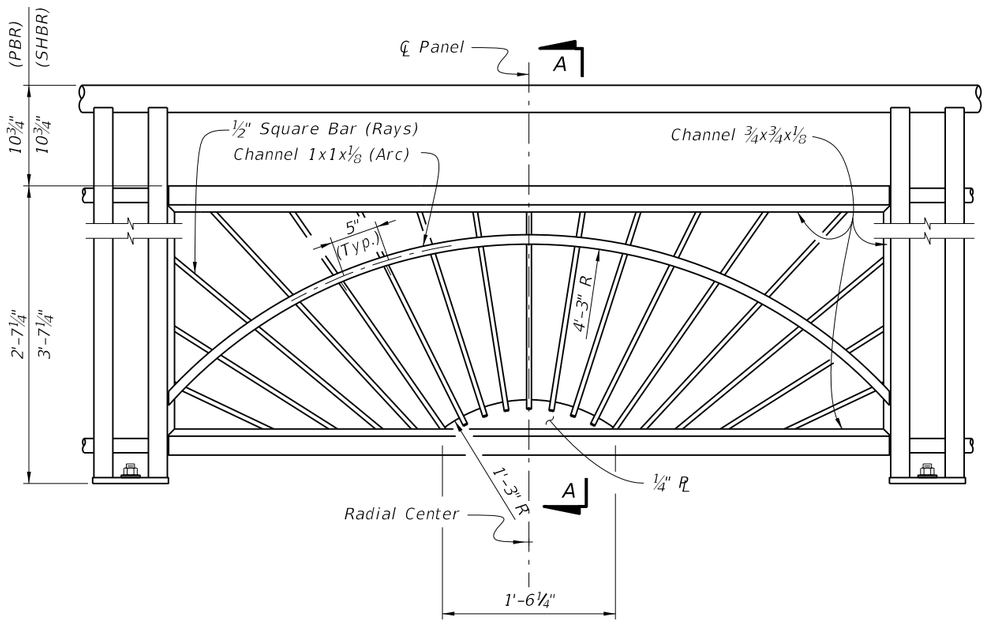

TYPE 3 - SUNSHINE INFILL PANEL

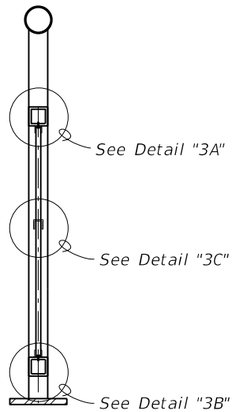

SECTION A-A

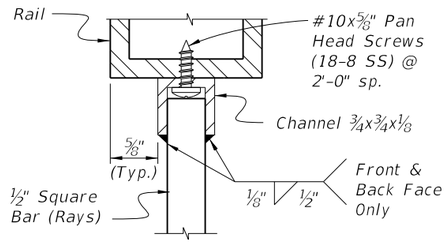

DETAIL "3A"
INTERMEDIATE RAIL/RAY CONNECTION

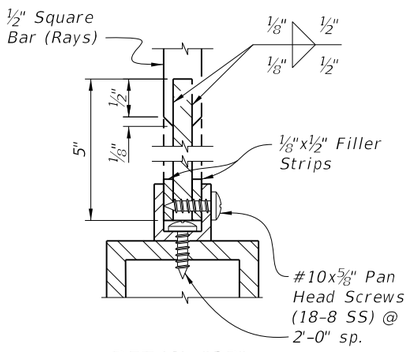

DETAIL "3B"
BOTTOM RAIL/RAY CONNECTION

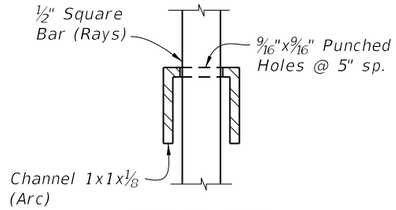

DETAIL "3C"
RAY/ARC CONNECTION

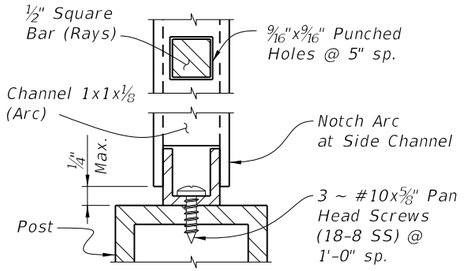

DETAIL "3D"
ARC/POST CONNECTION

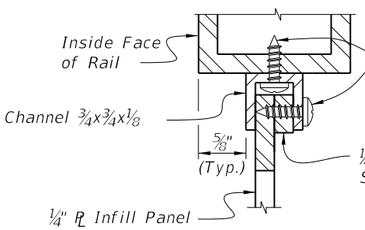

DETAIL "4A"
PANEL/RAIL CONNECTION
(Top Shown, Bottom Similar)

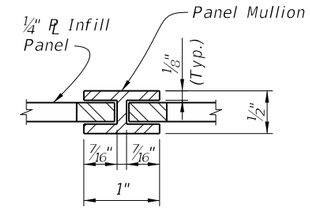

SECTION C-C
PANEL/SPLICE CONNECTION

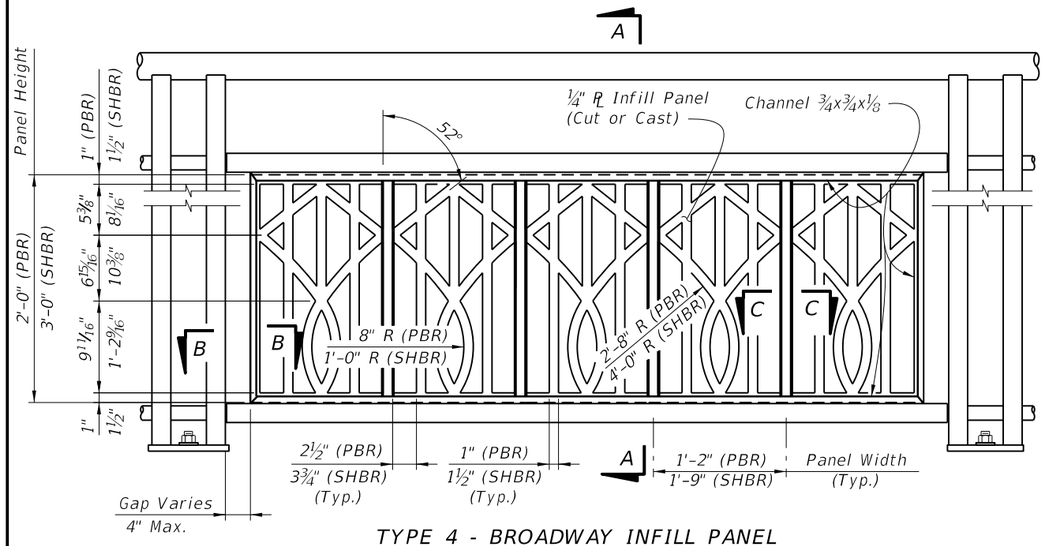

TYPE 4 - BROADWAY INFILL PANEL

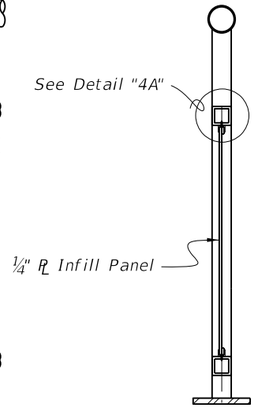

SECTION A-A

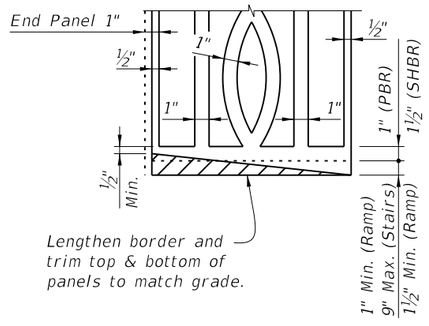

PANEL ADJUSTMENT FOR RAILINGS ON GRADES

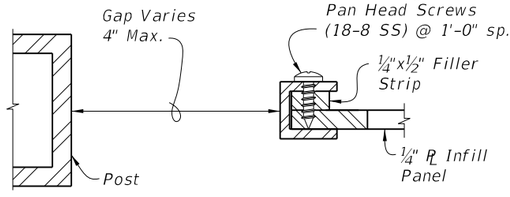

SECTION B-B
PANEL END CAP

NOTES:

1. See Plans for Infill Panel Option required.

LAST REVISION	REVISION	DESCRIPTION:			INDEX NO.	SHEET NO.
01/01/11			FDOT DESIGN STANDARDS 2013	ALUMINUM PEDESTRIAN/BICYCLE RAILING	862	6

C:\d\projects\standards\structures\2013book\00862-6of8.dgn rd960rh 2:12:00 PM 6/28/2012

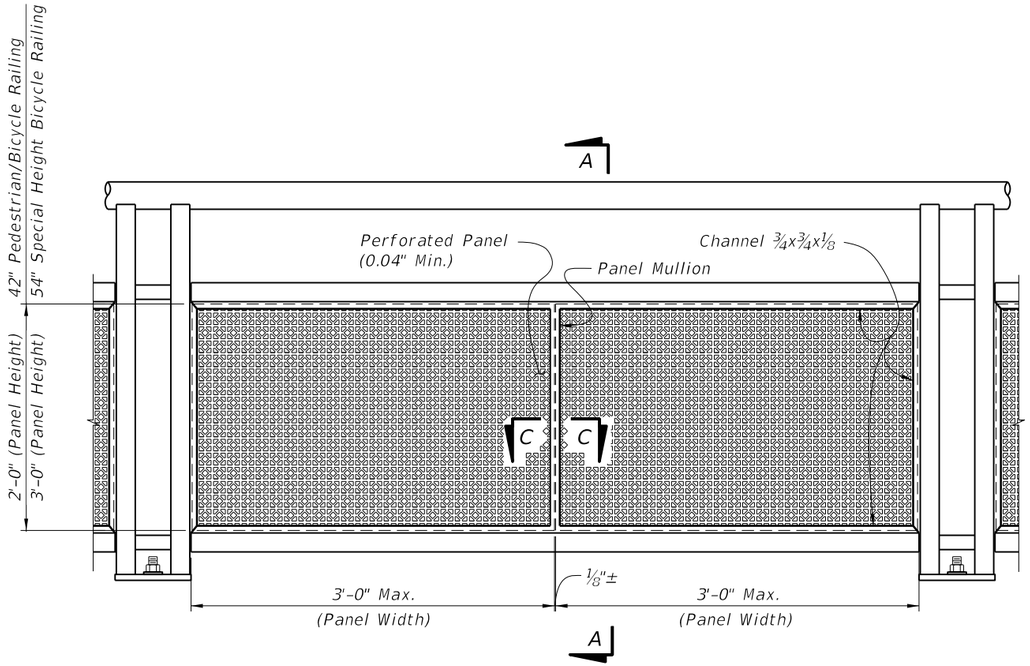

TYPE 5 - PERFORATED INFILL PANEL

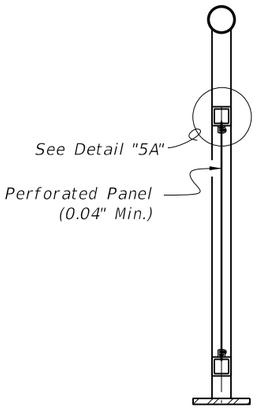

SECTION A-A

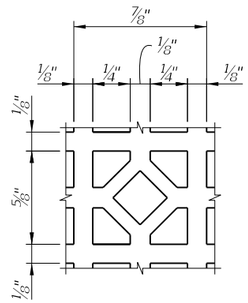

REPEATING PATTERN DETAIL
FOR PEFORATED PANEL

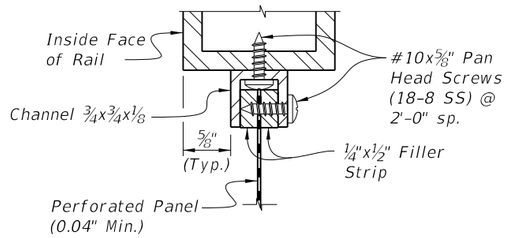

DETAIL "5A"
PANEL/RAIL CONNECTION
(Top Shown, Bottom & Sides Similar)

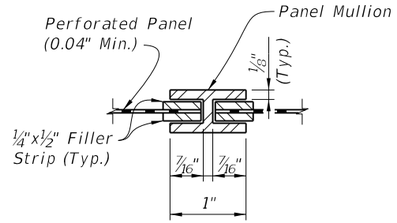

SECTION C-C
PANEL/SPLICE CONNECTION

6/28/2012 2:12:02 PM rd960rh C:\d\projects\standards\structures\2013book\00862-7of8.dgn

LAST REVISION	REVISION	DESCRIPTION:		FDOT DESIGN STANDARDS 2013	ALUMINUM PEDESTRIAN/BICYCLE RAILING	INDEX NO.	SHEET NO.
01/01/11						862	7

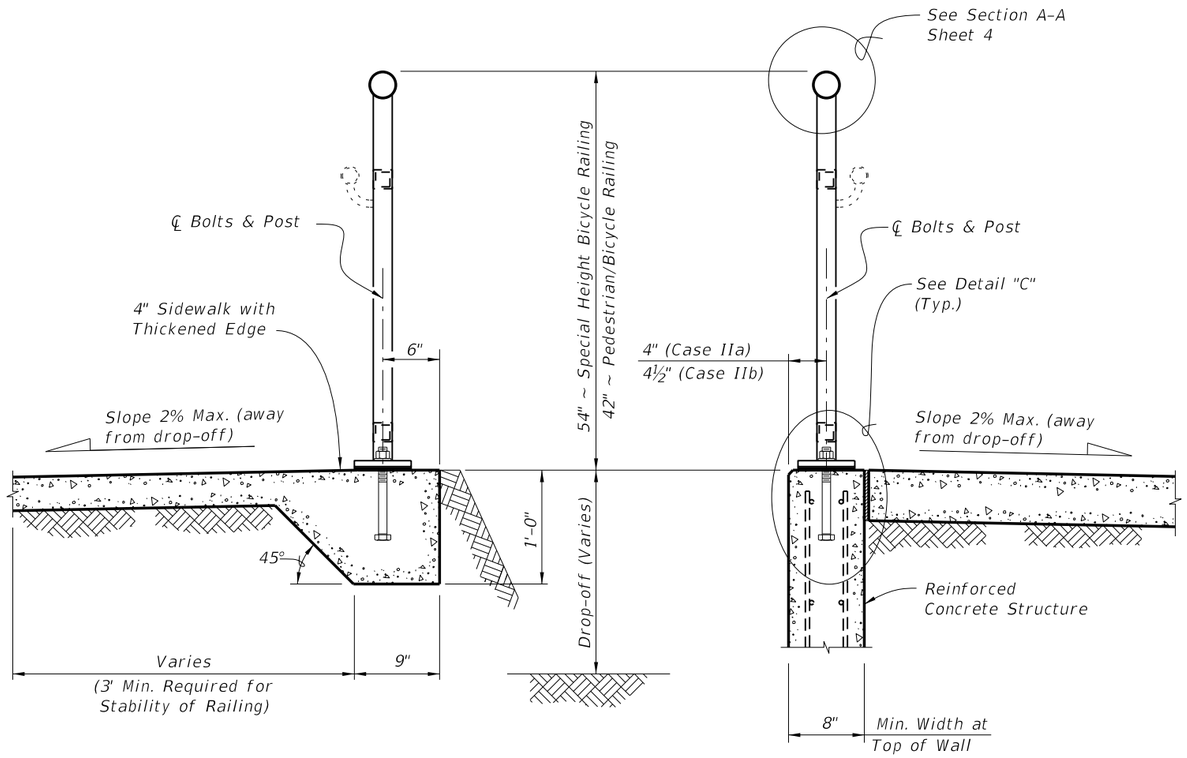

TYPICAL SECTION ON CONCRETE SIDEWALK
(Case I)

TYPICAL SECTION ON RETAINING WALL
(Case II)

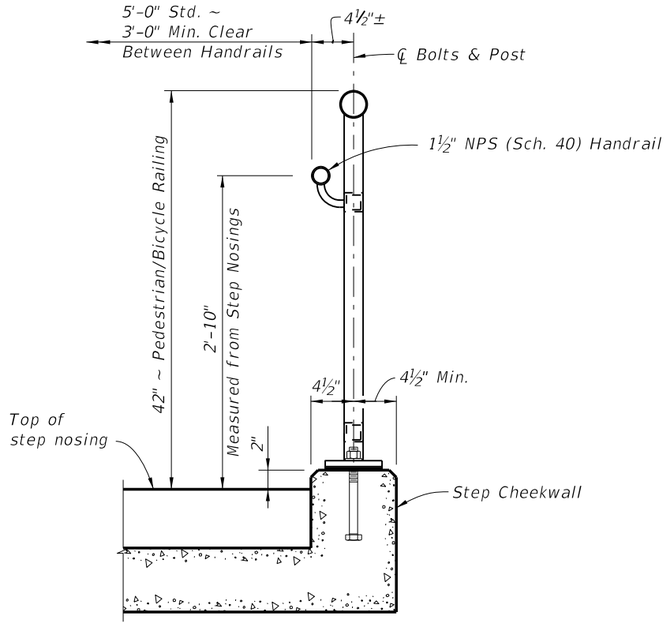

TYPICAL SECTION ON STEPS & STAIRS
(Case III)

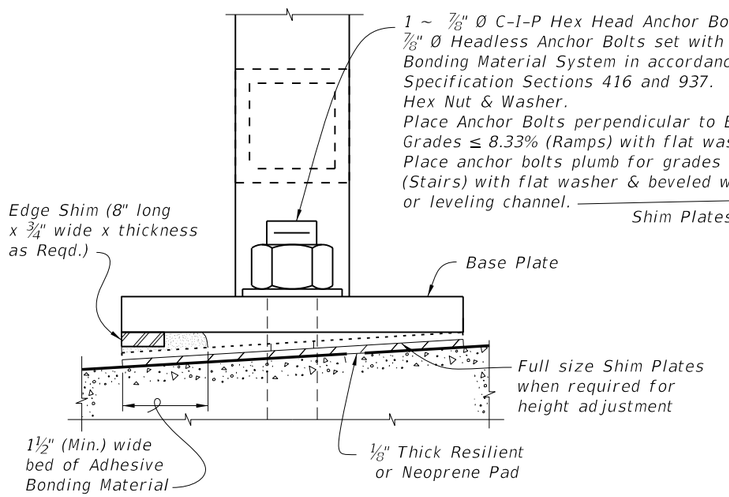

DETAIL "D" (OPTIONAL SHIMMING DETAIL
FOR CROSS SLOPE CORRECTION)
(Used in lieu of Beveled Shim Plates)

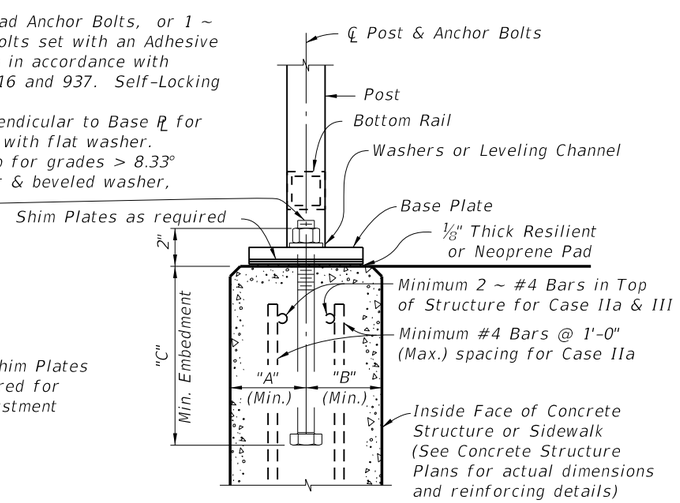

DETAIL "C"
(Cast-In-Place Anchor Bolts shown,
Adhesive Anchors similar)

ANCHOR BOLT TABLE

CASE	STRUCTURE TYPE	DIMENSIONS			ANCHOR LENGTH		ANCHOR SIZE
		"A" Edge Dist.	"B" Edge Dist.	"C" Embedment	C.I.P Hex Head Bolt	Adhesive Anchor	
I	Unreinforced Concrete	6"	1'-2"	9"	10½"	11"	⅞" Ø
IIa	Reinforced Concrete	4"	4"	9"	10½"	11"	⅞" Ø
IIb	Gravity Wall Index No. 6011	4½"	3½" @ top	1'-0" *	1'-1½"	1'-2"	⅞" Ø
III	Step Cheekwall	4½"	4½"	9"	10½"	11"	⅞" Ø

* Embedment length "C" may be reduced to 9" for the 42" height railings for Case IIb, when the post spacing does not exceed 5'-0".

C:\d\projects\standards\structures\2013book\00862-8of8.dgn rd960rh 2:12:05 PM 6/28/2012

NOTES

PIPE RAILING & POSTS:
Structural Tube, Pipe and Bar shall be in accordance with ASTM B221 or ASTM B429, Alloy 6061-T6. End Rail 90° bends and corner bends with maximum 4'-0" post spacing, may be Alloy 6063-T6. Posts and End Rails shall be fabricated and installed plumb, ± 1" tolerance when measured at 3'-6" above the foundation. Corners and changes in tangential longitudinal alignment, may be made continuous with a 9" bend radius or terminated at adjoining sections with a standard end hoop when handrails are not required. For changes in tangential longitudinal alignment greater than 45°, posts shall be positioned at a maximum distance of 2'-0" each side of the corner and shall not be located at the corner apex. For curved longitudinal alignments the top and bottom rails and handrails shall be shop bent to match the alignment radius.

RAILING MEMBER DIMENSIONS TABLE			
MEMBER	DESIGNATION	OUTSIDE DIMENSION	WALL THICKNESS
Posts	2" NPS (Sch. 40)	2.375"	0.154"
Rails	2" NPS (Sch. 40)	2.375"	0.154"
Rail Joint/Splice Sleeves	1½" NPS (Sch. 40)	1.900"	0.145"
Handrails Joint/Splice Sleeves	1" NPS (Sch. 40)	1.315"	0.133"
Handrails	1½" NPS (Sch. 40)	1.900"	0.145"
Handrail Support Bar	1" Ø Round Bar	1.000"	N/A

BASE PLATES:
Base Plates shall be in accordance with ASTM B209, Alloy 6061-T6.
SHIM PLATES:
Shim Plates shall be aluminum in accordance with ASTM B209, Alloy 6061 or 6063. Shim plates shall be used for foundation height adjustments greater than ¼" and localized irregularities greater than ⅛". Field trim shim plates when necessary to match the contours of the foundation. Bevelled shim plates may be used in lieu of trimmed flat shim plates shown. Stacked shim plates must be bonded together with adhesive bonding material and limited to a maximum total thickness of ½", unless longer anchor bolts are provided for the exposed thread length.
COATINGS:
The aluminum railing shall be mill finish unless otherwise noted in the Contract Documents. All nuts, bolts and washers shall be hot-dip galvanized in accordance with Section 962 of the Specifications.
ANCHOR BOLTS:
Anchor bolts shall be in accordance with ASTM F1554 Grade 36. Headless anchor bolts for Adhesive Anchors shall be threaded full length. Cutting of reinforcing steel is permitted for drilled hole installation. All anchor bolts shall have single self-locking hex nuts. Tack welding of the nut to the anchor bolt may be used in lieu of self-locking nuts. All nuts shall be in accordance with ASTM A563 or ASTM A194. Flat Washers shall be in accordance with ASTM F436 and Plate Washers (for long slotted holes only), shall be in accordance with ASTM A36 or ASTM A709 Grade 36. After the nuts have been snug tightened, the anchor bolt threads shall be distorted to prevent removal of the nuts. Distorted threads and tack welds shall be coated with a galvanizing compound in accordance with the Specifications.
RESILIENT AND NEOPRENE PADS:
Resilient and Neoprene pads shall be in accordance with Specification Section 932, except that testing of the finished pads shall not be required. Neoprene pads shall be durometer hardness 60 or 70.
JOINTS:
All fixed joints are to be welded all around and ground smooth. Expansion Joints shall be spaced at a maximum of 30'-0". Field splices similar to the expansion joint detail may be approved by the Engineer to facilitate shipping and handling, but rails must be continuous across a minimum of two posts. Only use the Continuity Field Splice (Detail "E") to make the railing continuous for unforeseen field adjustments.
WELDING:
All welding shall be in accordance with the American Welding Society Structural Welding Code (Aluminum) ANSI/AWS D1.2 (current edition). Filler metal shall be either ER5183, ER5356 or ER5556. Nondestructive testing of welds is not required.
SHOP DRAWINGS:
Complete details addressing project specific geometry (line & grade) showing post and expansion joint locations must be submitted by the Contractor for the Engineer's approval prior to fabrication of the railing. Shop drawings shall be in accordance with the Specifications.
PAYMENT:
Guiderail shall be paid for under the contract unit price for Pipe Guiderail (Aluminum), LF (Item No. 515-1-2). Payment for the Guiderail will be plan quantity measured as the length along the center line of the top rail, and includes rails, posts, rail splice assembly, base plates, anchor bolts, nuts, washers, resilient or neoprene pads and all incidental materials and labor required to complete installation of the Guiderail.

C:\d\projects\standards\roadway\00800-s\00870-01.dgn rd960rh 2:12:07 PM 6/28/2012

LAST REVISION	REVISION	DESCRIPTION:			INDEX NO.	SHEET NO.
01/01/11			FDOT DESIGN STANDARDS 2013	ALUMINUM PIPE GUIDERAIL	870	1

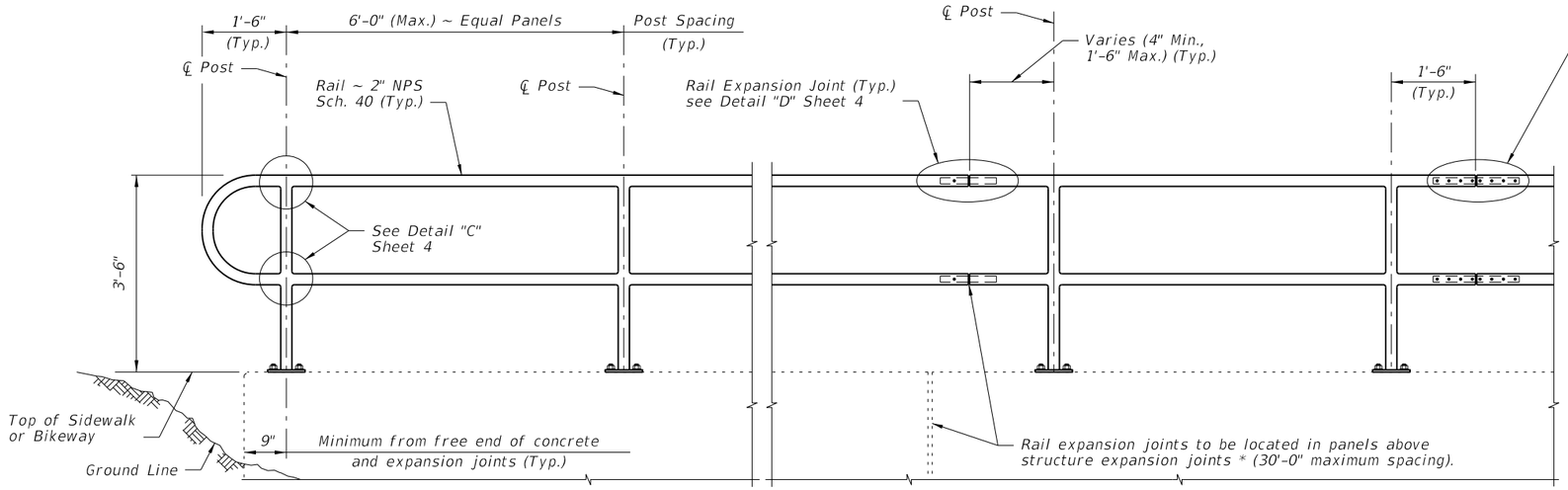

ELEVATION

NOTES:
NPS = Nominal Pipe Size

STRUCTURES EXPANSION JOINTS NOTE:
* Keyed construction joints in Index No. 520 Gravity Wall are not considered to be expansion joints.

CROSS REFERENCE:
For Details "C", "D" and "E", see Sheet 4.

TYPICAL RAILING DETAILS & RAILINGS ON GRADES 0% TO 5%

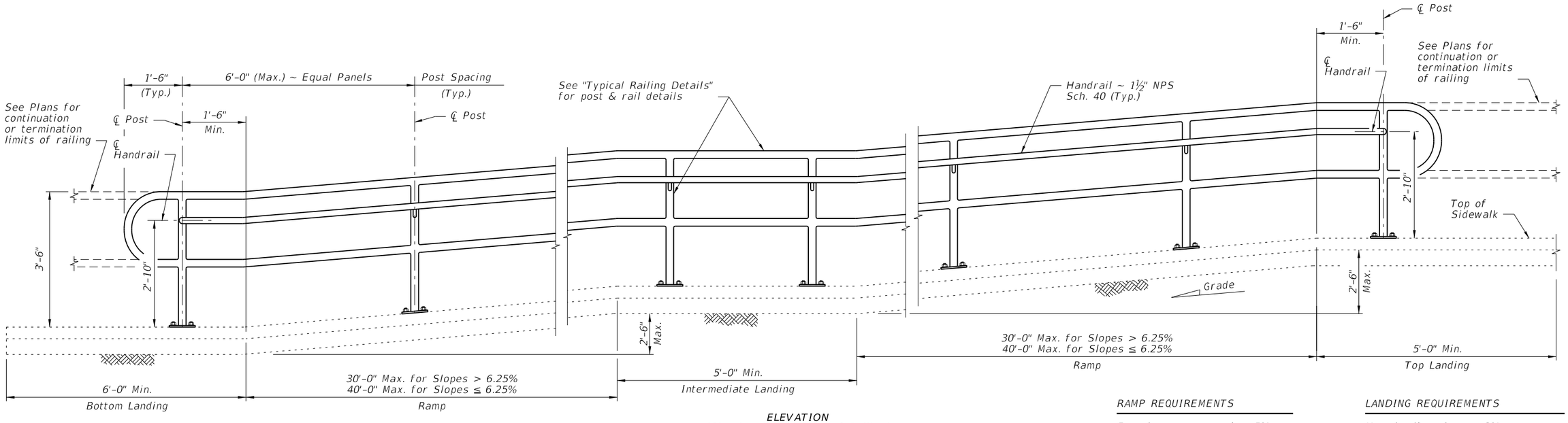

ELEVATION
(Showing Inside Face of Railing)

RAMP REQUIREMENTS

For slopes greater than 5%:
Max. ramp slope = 8.33%
Max. ramp cross-slope = 2.0%

LANDING REQUIREMENTS

Max. landing slope = 2%
Max. landing cross-slope = 2%

RAILINGS ON GRADES STEEPER THAN 5% TO 8.33%

C:\d\projects\standards\roadway\00800-s\00870-02.dgn
rd960\rh
2:12:11 PM
6/28/2012

LAST REVISION	REVISION	DESCRIPTION:			INDEX NO.	SHEET NO.
01/01/12			FDOT DESIGN STANDARDS 2013	ALUMINUM PIPE GUIDERAIL	870	2

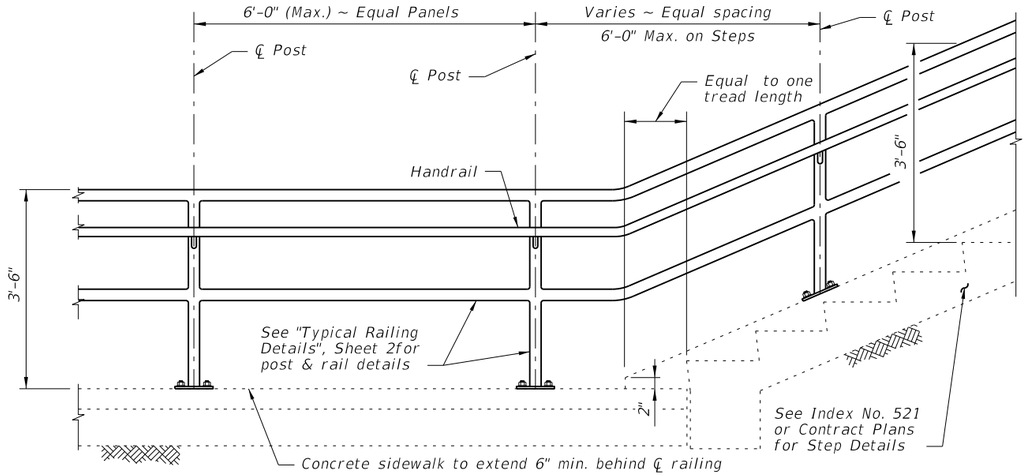

RAILING CONTINUATION BEYOND STEPS
(Bottom shown, Top similar)

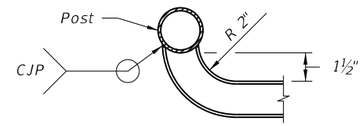

DETAIL "A" - PLAN VIEW
HANDRAIL TERMINATION

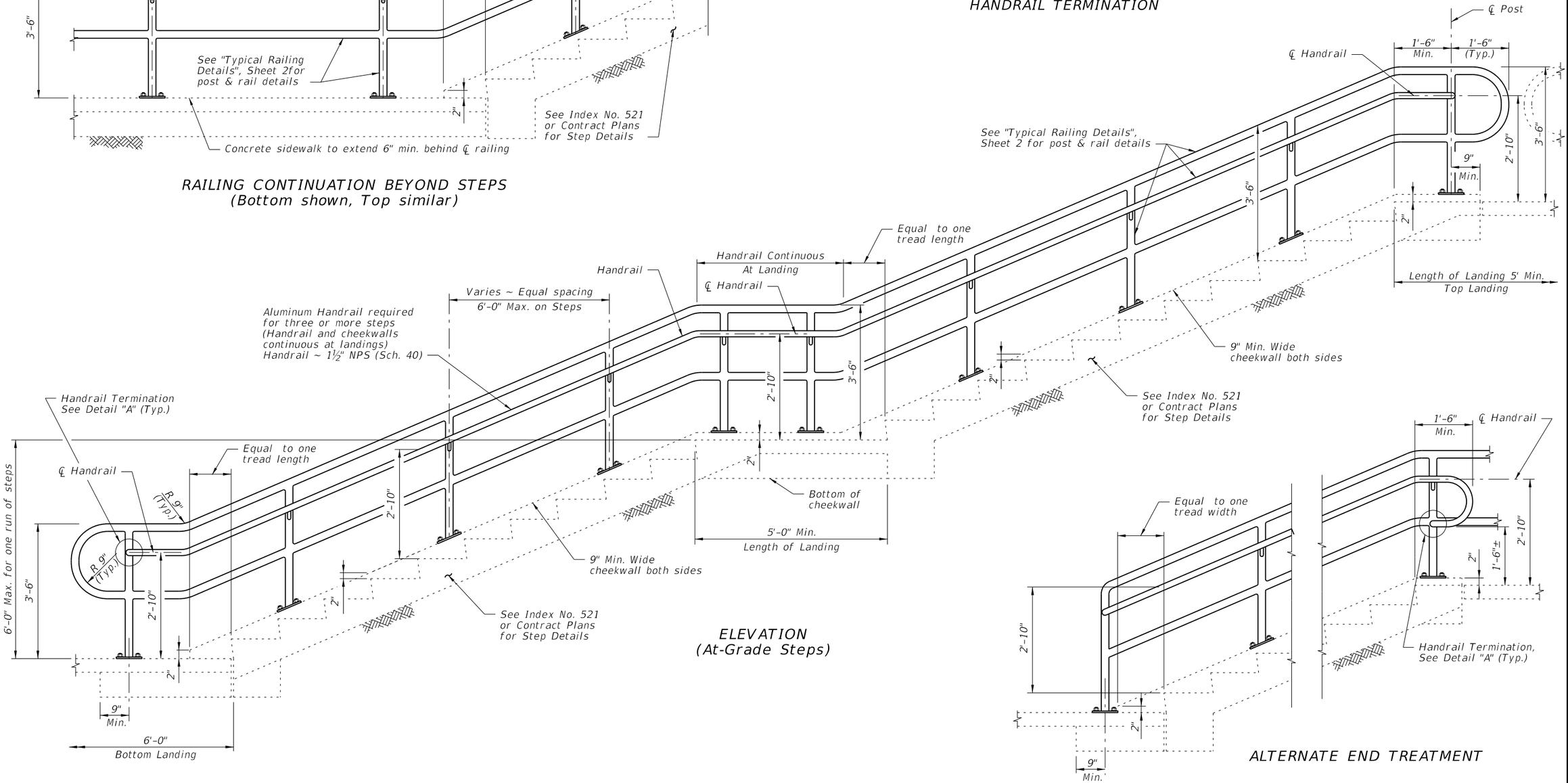

ELEVATION
(At-Grade Steps)

ALTERNATE END TREATMENT

GUIDERAIL ON STEPS & STAIRS

LAST REVISION	REVISION	DESCRIPTION:			INDEX NO.	SHEET NO.
01/01/12			FDOT DESIGN STANDARDS 2013	ALUMINUM PIPE GUIDERAIL	870	3

6/28/2012 2:12:13 PM rd960rh C:\d\projects\standards\roadway\00800-s\00870-03.dgn

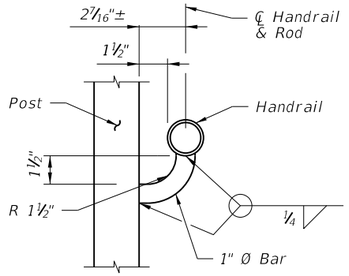

SECTION B-B
(Handrail Connection)

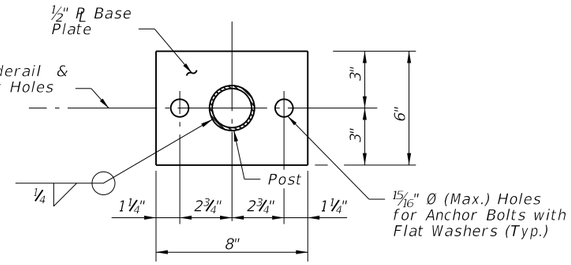

SECTION C-C
BASE PLATE DETAIL

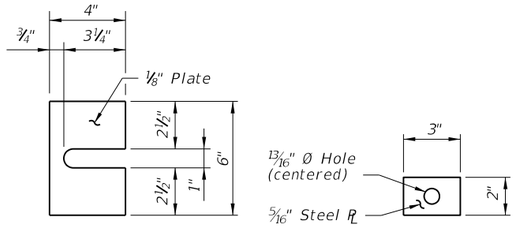

SHIM PLATE
DETAIL

PLATE WASHER
DETAIL

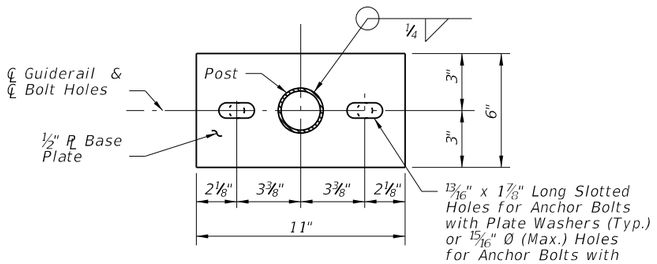

ALTERNATE BASE
PLATE DETAIL
(Recommended for Top of Step Cheekwalls)

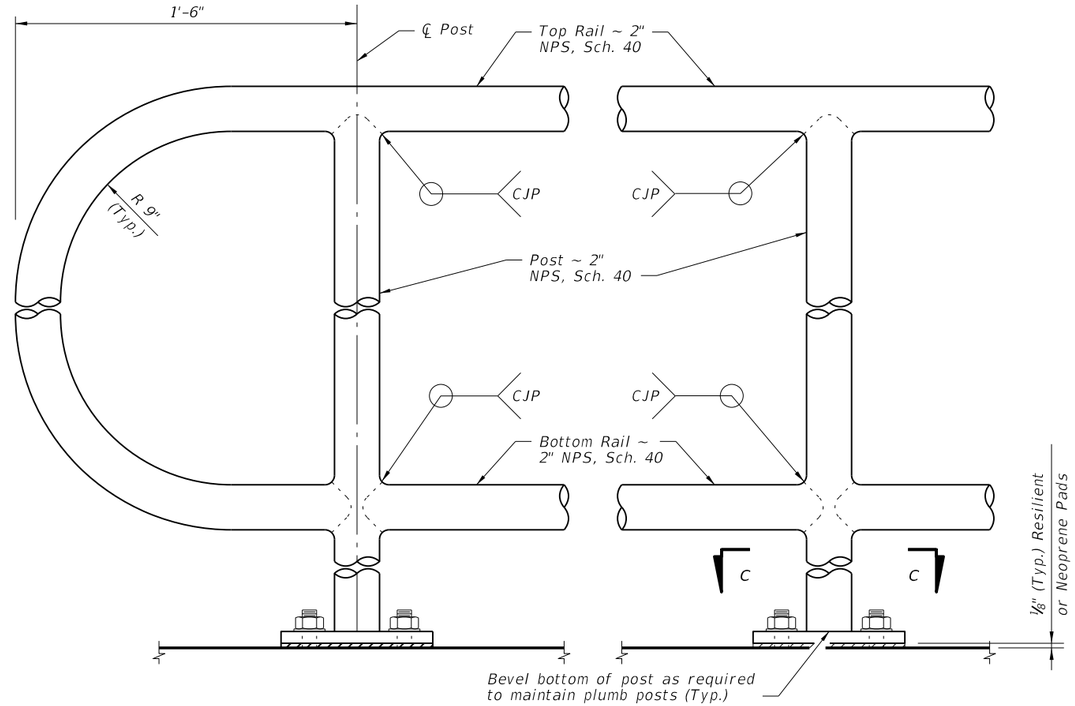

DETAIL "C" - RAIL CONNECTIONS
(Handrail Not Shown)

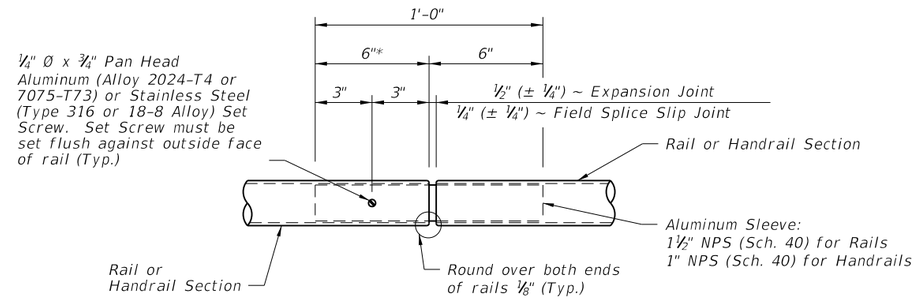

DETAIL "D" - EXPANSION JOINT
(FIELD SPLICE SLIP JOINT SIMILAR)

* At the Contractor's option, embedded length may be 4" when a ¾" Ø plug weld is substituted for the ¼" Ø set screw.

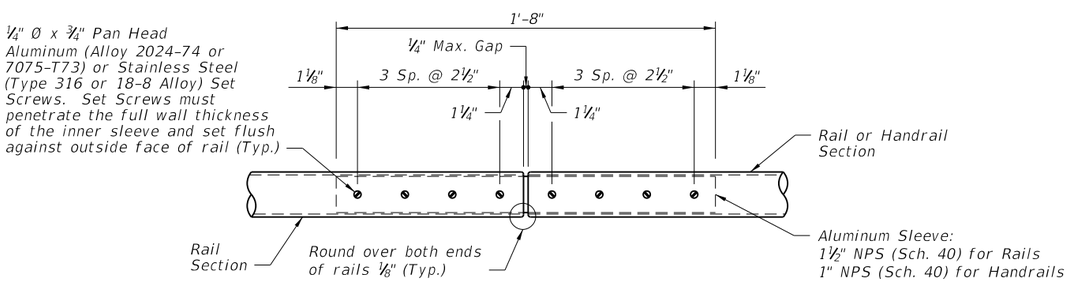

DETAIL "E" - CONTINUITY
FIELD SPLICE

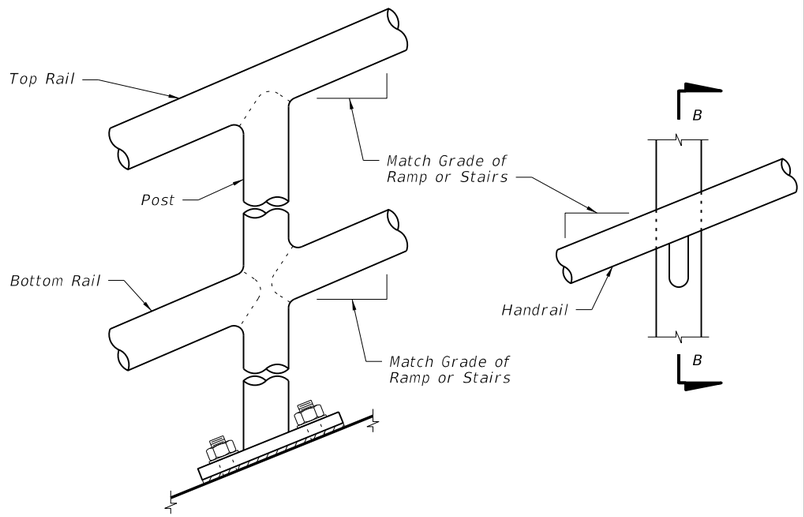

DETAIL "B" - RAIL AND HANDRAIL
(Showing Sloped Condition for Stairs or Ramp)

CROSS REFERENCE:
For locations of Details "C", "D" and "E", see Sheet 2.

C:\d\projects\standards\roadway\00800-s\00870-04.dgn
rd960rh
2:12:15 PM
6/28/2012

LAST REVISION	REVISION	DESCRIPTION:		FDOT DESIGN STANDARDS 2013	ALUMINUM PIPE GUIDERAIL	INDEX NO.	SHEET NO.
07/01/10						870	4

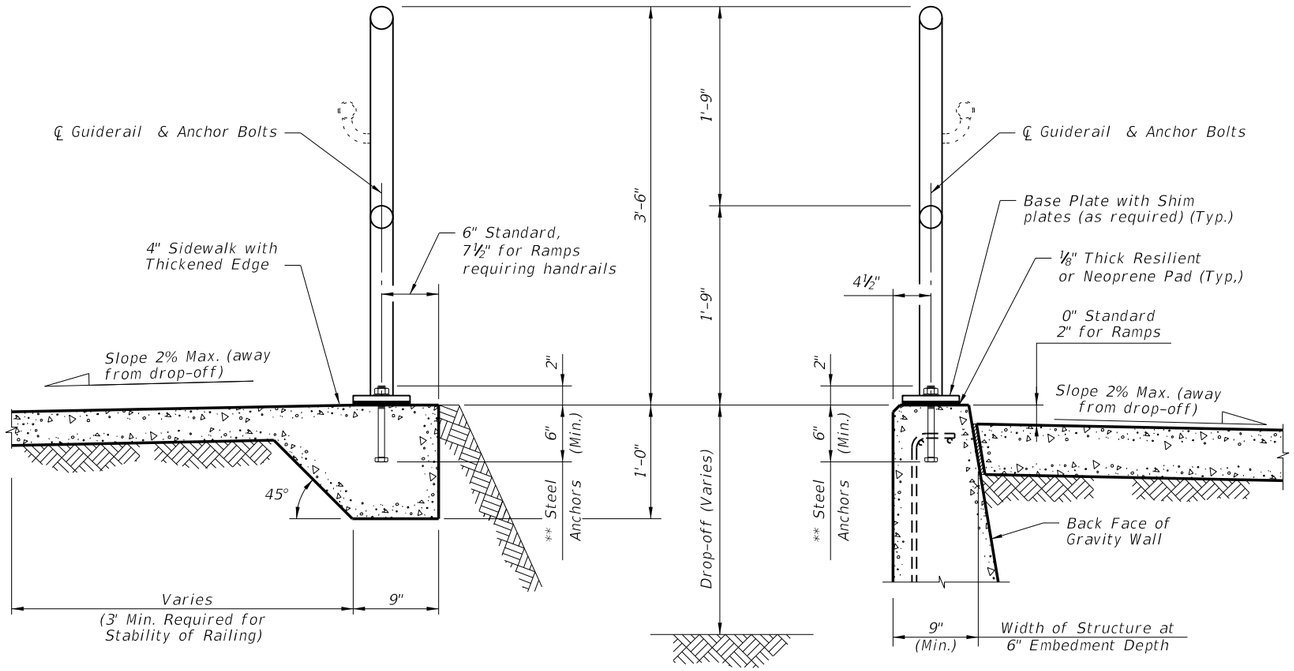

TYPICAL SECTION ON CONCRETE SIDEWALK

TYPICAL SECTION ON GRAVITY WALL
(Other Retaining Walls Similar)

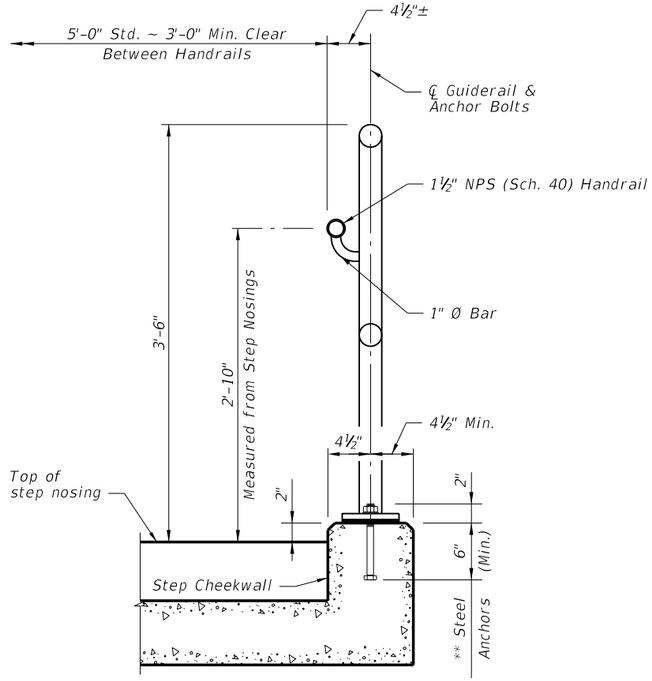

TYPICAL SECTION ON STEPS & STAIRS

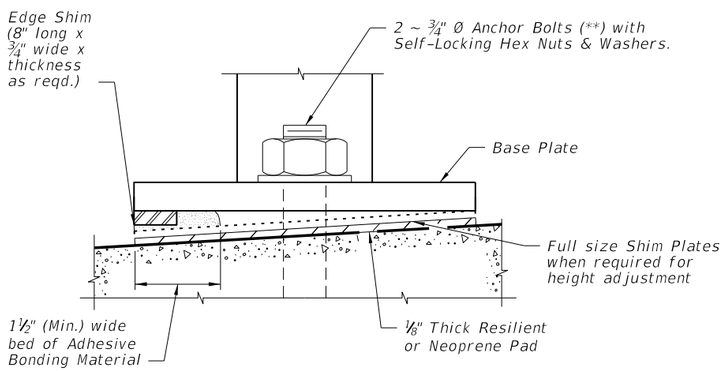

DETAIL "F" (OPTIONAL SHIMMING DETAIL
FOR CROSS SLOPE CORRECTION)
(Used in lieu of Beveled Shim Plates)

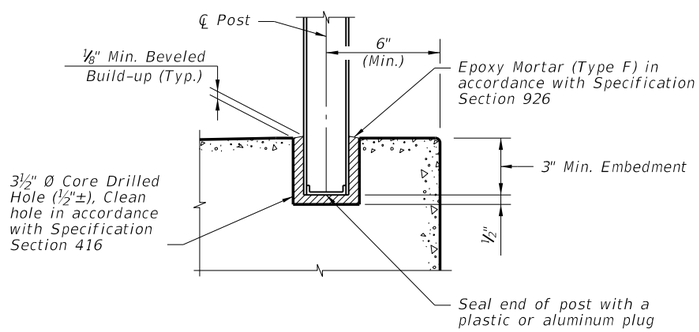

OPTIONAL SIDEWALK ANCHORAGE DETAIL

NOTES:
** 2 ~ ¾" Ø x 8" Steel Anchors:
Galvanized Steel Bolts (As Shown) (C-I-P); Galvanized U-Bolts Permitted (C-I-P); Galvanized Adhesive Anchors Permitted (***); Expansion Anchors Not Permitted.
*** Adhesive anchors shall be fully threaded headless anchor bolts set in drilled holes (manufacturer recommended diameter) with an Adhesive Bonding Material System in accordance with Specification Section 937 and installed in accordance with Specification Section 416. The minimum embedment is 6".

C:\d\projects\standards\roadway\00800-s\00870-05.dgn rd960rh 2:12:18 PM 6/28/2012

NOTES

PIPE RAILING & POSTS:
Pipe Rails and Posts shall be in accordance with ASTM A53 Grade B for standard weight pipe and ASTM A500 Grade B, C or D or ASTM A501 for structural tube. Bars for handrail supports shall be ASTM A36. Posts and End Rails shall be fabricated and installed plumb, ± 1" tolerance when measured at 3'-6" above the foundation. Corners and changes in tangential longitudinal alignment, may be made continuous with a 9" bend radius or terminated at adjoining sections with a standard end hoop when handrails are not required. For changes in tangential longitudinal alignment greater than 45°, posts shall be positioned at a maximum distance of 2'-0" each side of the corner and shall not be located at the corner apex. For curved longitudinal alignments the top and bottom rails and handrails shall be shop bent to match the alignment radius.

RAILING MEMBER DIMENSIONS TABLE			
MEMBER	DESIGNATION	OUTSIDE DIMENSION	WALL THICKNESS
Posts	2" NPS (Sch. 40)	2.375"	0.154"
Rails	2" NPS (Sch. 40)	2.375"	0.154"
Rail Joint/Splice Sleeves	1½" NPS (Sch. 40)	1.900"	0.145"
Handrails Joint/Splice Sleeves	1" NPS (Sch. 40)	1.315"	0.133"
Handrails	1½" NPS (Sch. 40)	1.900"	0.145"
Handrail Support Bar	1" Ø Round Bar	1.000"	N/A

BASE PLATES:
Base Plates shall be in accordance with ASTM A36 or ASTM A709 Grade 36.

SHIM PLATES:
Shim Plates shall be aluminum in accordance with ASTM B209, Alloy 6061 or 6063. Shim plates shall be used for foundation height adjustments greater than ¼" and localized irregularities greater than ⅛". Field trim shim plates when necessary to match the contours of the foundation. Bevelled shim plates may be used in lieu of trimmed flat shim plates shown. Stacked shim plates must be bonded together with adhesive bonding material and limited to a maximum total thickness of ½", unless longer anchor bolts are provided for the exposed thread length.

COATINGS:
The railing shall be hot-dip galvanized after fabrication in accordance with Section 962 of the Specifications. All nuts, bolts and washers shall be hot-dip galvanized in accordance with Section 962 of the Specifications.

ANCHOR BOLTS:
Anchor bolts shall be in accordance with ASTM F1554 Grade 36. Headless anchor bolts for Adhesive Anchors shall be threaded full length. Cutting of reinforcing steel is permitted for drilled hole installation. All anchor bolts shall have single self-locking hex nuts. Tack welding of the nut to the anchor bolt may be used in lieu of self-locking nuts. All nuts shall be in accordance with ASTM A563 or ASTM A194. Flat Washers shall be in accordance with ASTM F436 and Plate Washers (for long slotted holes only), shall be in accordance with ASTM A36 or ASTM A709 Grade 36. After the nuts have been snug tightened, the anchor bolt threads shall be distorted to prevent removal of the nuts. Distorted threads and tack welds shall be coated with a galvanizing compound in accordance with the Specifications.

RESILIENT AND NEOPRENE PADS:
Resilient and Neoprene pads shall be in accordance with Specification Section 932, except that testing of the finished pads shall not be required. Neoprene pads shall be durometer hardness 60 or 70.

JOINTS:
All fixed joints are to be welded all around and ground smooth. Expansion Joints shall be spaced at a maximum of 30'-0". Field splices similar to the expansion joint detail may be approved by the Engineer to facilitate shipping and handling, but rails must be continuous across a minimum of two posts. Only use the Continuity Field Splice (Detail "E") to make the railing continuous for unforeseen field adjustments.

WELDING:
All welding shall be in accordance with the American Welding Society Structural Welding Code (Steel) ANSI/AWS D1.1 (current edition). Weld metal shall be E60XX or E70XX. Nondestructive testing of welds is not required.

SHOP DRAWINGS:
Complete details addressing project specific geometry (line & grade) showing post and expansion joint locations must be submitted by the Contractor for the Engineer's approval prior to fabrication of the railing. Shop drawings shall be in accordance with the Specifications.

PAYMENT:
Guiderail shall be paid for under the contract unit price for Pipe Guiderail (Steel), LF (Item No. 515-1-1). Payment for the Guiderail will be plan quantity measured as the length along the center line of the top rail, and includes rails, posts, rail splice assembly, base plates, anchor bolts, nuts, washers, resilient or neoprene pads and all incidental materials and labor required to complete installation of the Guiderail.

6/28/2012 2:12:20 PM rd960rh C:\d\projects\standards\roadway\00800-s\00880-01.dgn

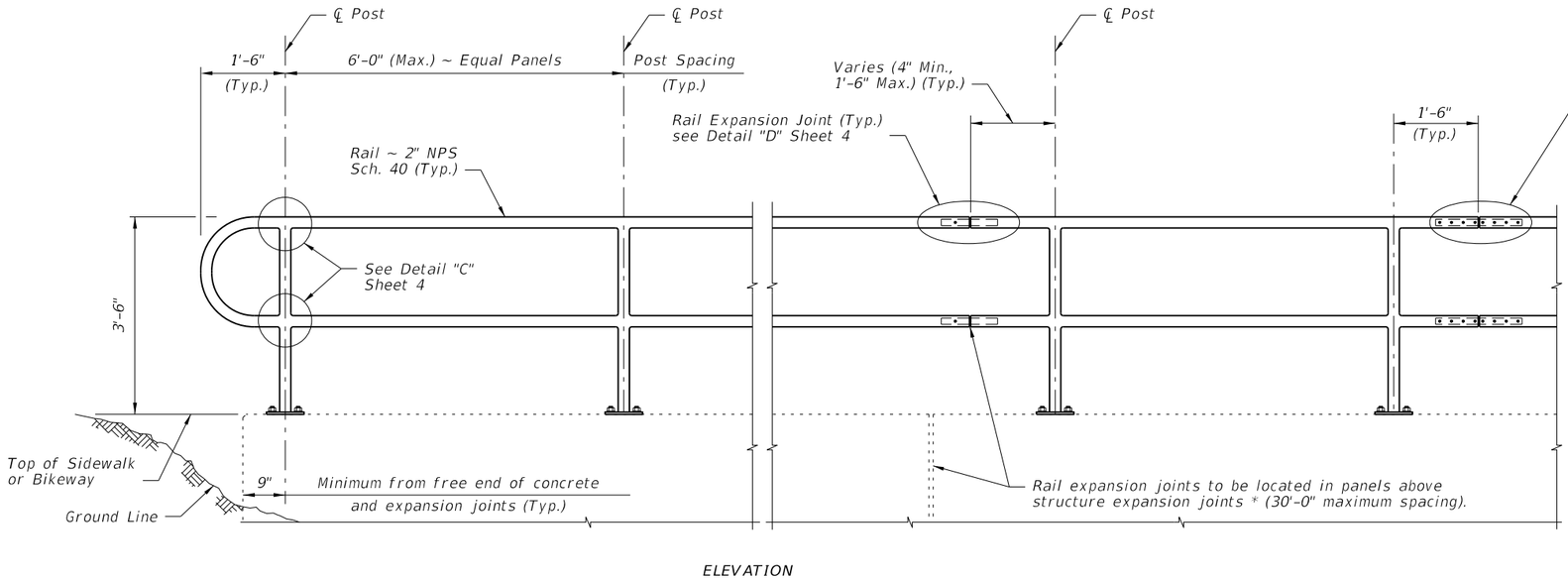

ELEVATION

NOTES:
NPS = Nominal Pipe Size

STRUCTURES EXPANSION JOINTS NOTE:
* Keyed construction joints in Index No. 520 Gravity Wall are not considered to be expansion joints.

CROSS REFERENCE:
For Details "C", "D" and "E", see Sheet 4.

TYPICAL RAILING DETAILS & RAILINGS ON GRADES 0% TO 5%

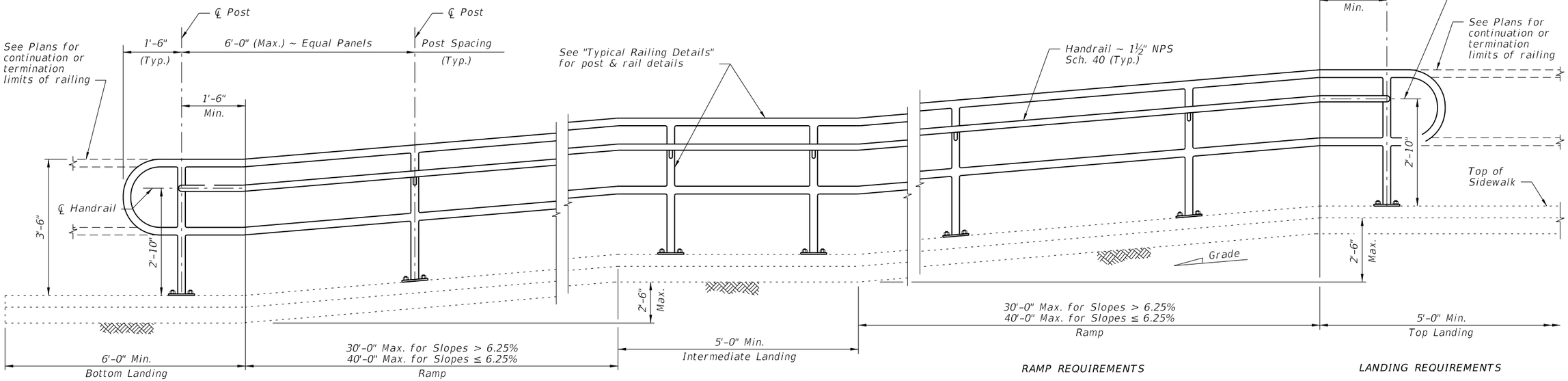

ELEVATION
(Showing Inside Face of Railing)

RAMP REQUIREMENTS

For slopes greater than 5%:
Max. ramp slope = 8.33%
Max. ramp cross-slope = 2.0%

LANDING REQUIREMENTS

Max. landing slope = 2%
Max. landing cross-slope = 2%

RAILINGS ON GRADES STEEPER THAN 5% TO 8.33%

C:\d\projects\standards\roadway\00800-s\00880-02.dgn
rd960rh
2:12:22 PM
6/28/2012

LAST REVISION	REVISION	DESCRIPTION:			INDEX NO.	SHEET NO.
01/01/12			FDOT DESIGN STANDARDS 2013	STEEL PIPE GUIDERAIL	880	2

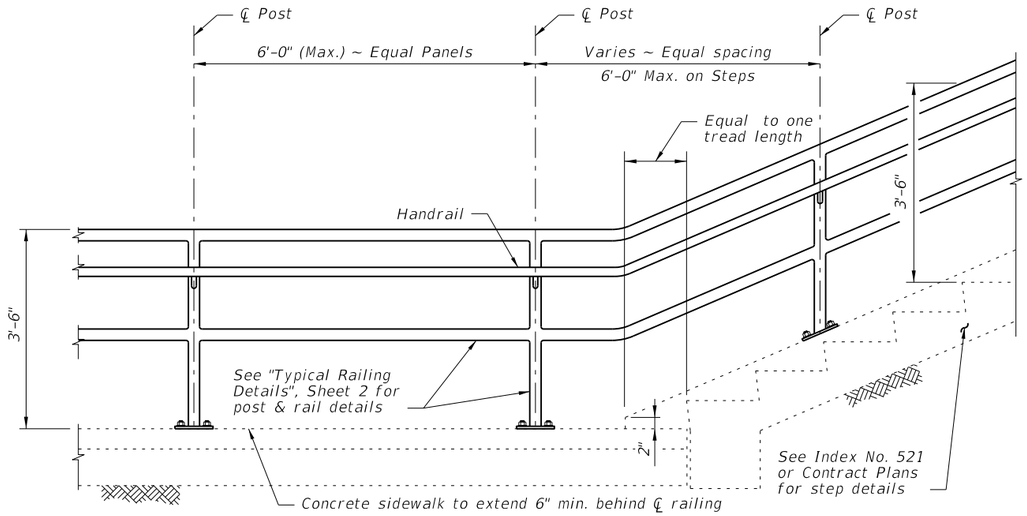

RAILING CONTINUATION BEYOND STEPS
(Bottom shown, Top similar)

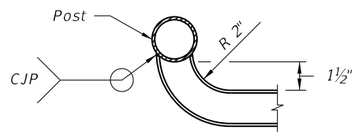

DETAIL "A" - PLAN VIEW
HANDRAIL TERMINATION

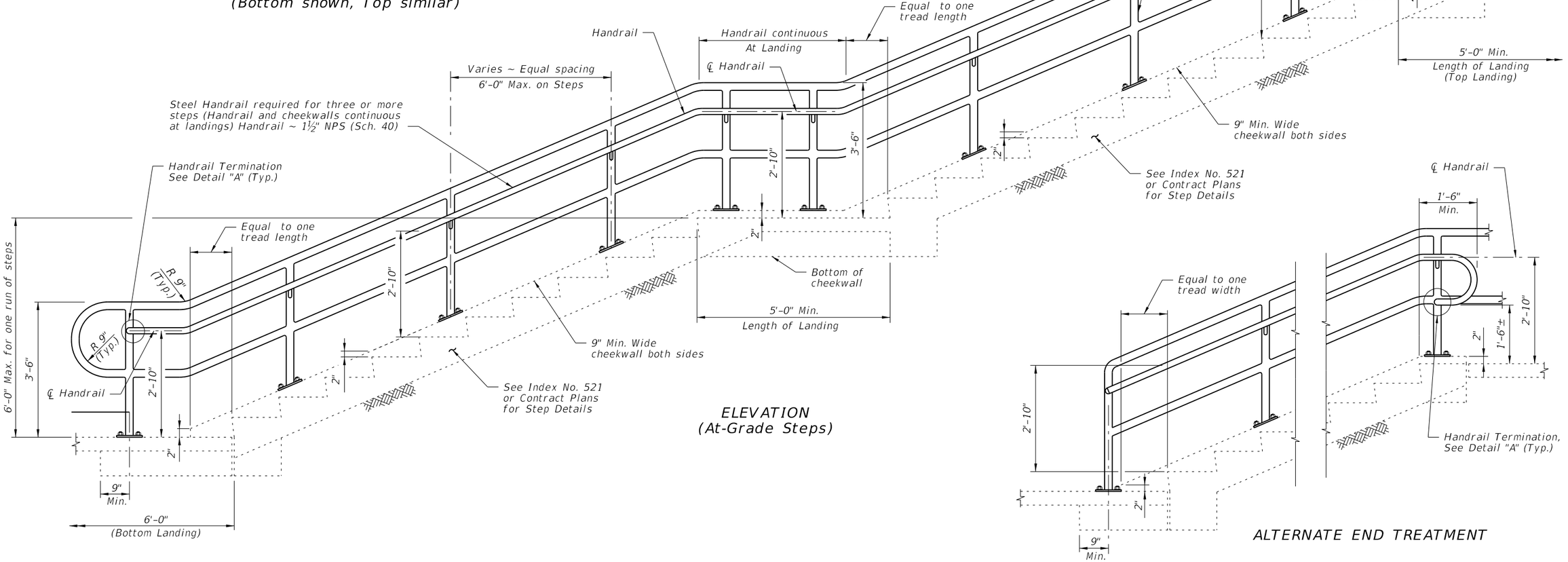

ELEVATION
(At-Grade Steps)

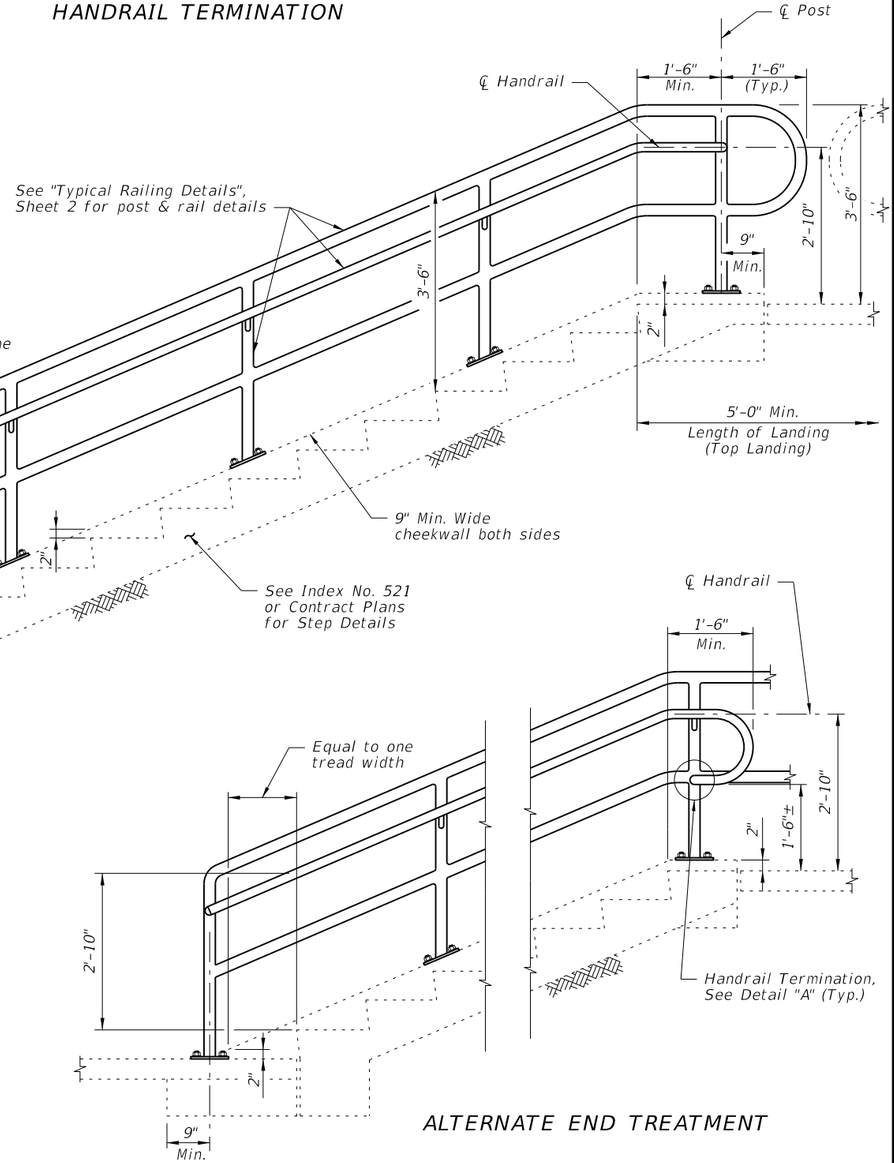

ALTERNATE END TREATMENT

GUIDERAIL ON STEPS & STAIRS

LAST REVISION	REVISION	DESCRIPTION:			INDEX NO.	SHEET NO.
01/01/12			FDOT DESIGN STANDARDS 2013	STEEL PIPE GUIDERAIL	880	3

C:\d\projects\standards\roadway\00800-s\00880-03.dgn
rd960rh
2:12:25 PM
6/28/2012

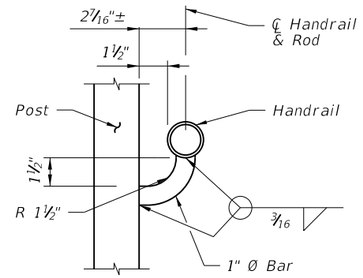

SECTION B-B
(Handrail Connection)

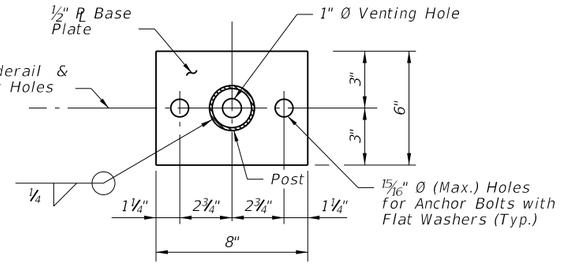

SECTION C-C
BASE PLATE DETAIL

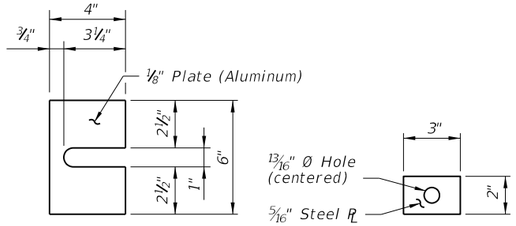

SHIM PLATE
DETAIL

PLATE WASHER
DETAIL

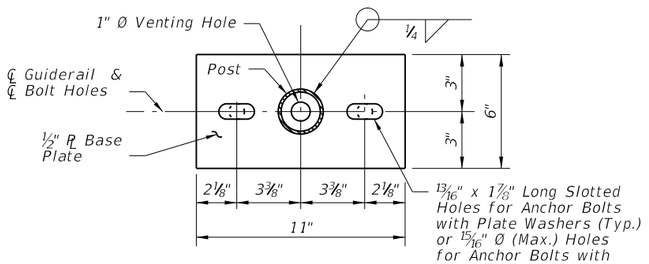

ALTERNATE BASE
PLATE DETAIL
(Recommended for Top of Step Cheekwalls)

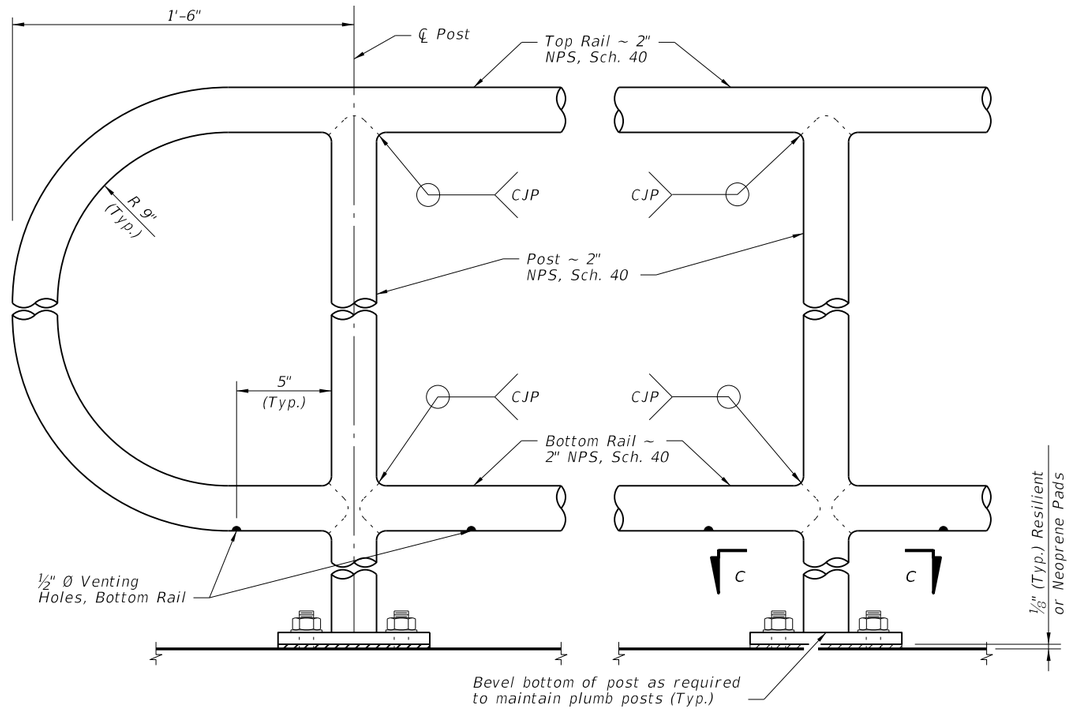

DETAIL "C" - RAIL CONNECTIONS
(Handrail Not Shown)

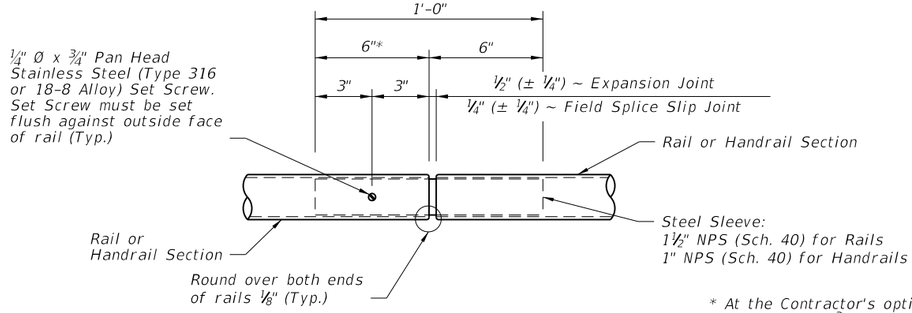

DETAIL "D" - EXPANSION JOINT
(FIELD SPLICE SLIP JOINT SIMILAR)

* At the Contractor's option, embedded length may be 4" when a ¾" Ø plug weld is substituted for the ¼" Ø set screw.

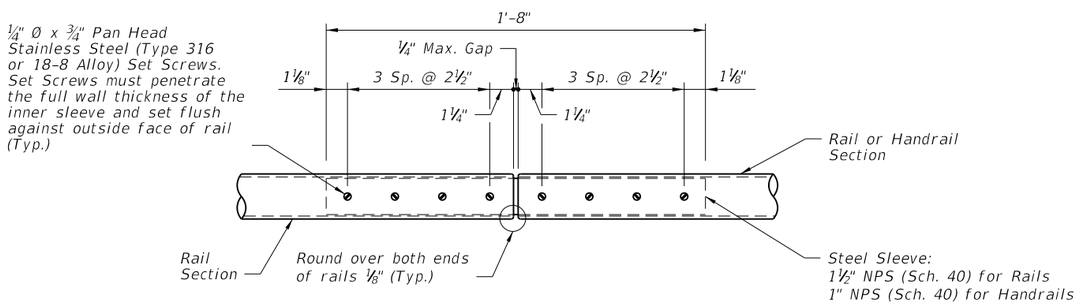

DETAIL "E" - CONTINUITY
FIELD SPLICE

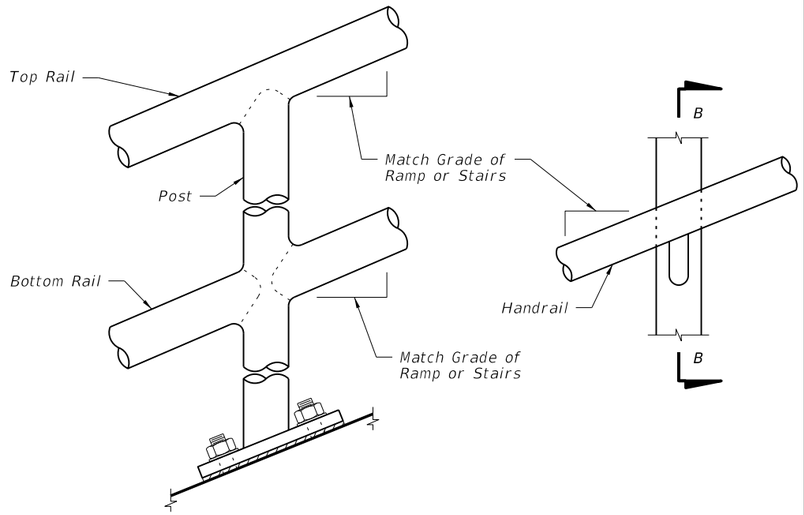

DETAIL "B" - RAIL AND HANDRAIL
(Showing Sloped Condition for Stairs or Ramp)

CROSS REFERENCE:
For locations of Details "C", "D" and "E", see Sheet 2.

6/28/2012 2:12:27 PM rd960rh C:\d\projects\standards\roadway\00800-s\00880-04.dgn

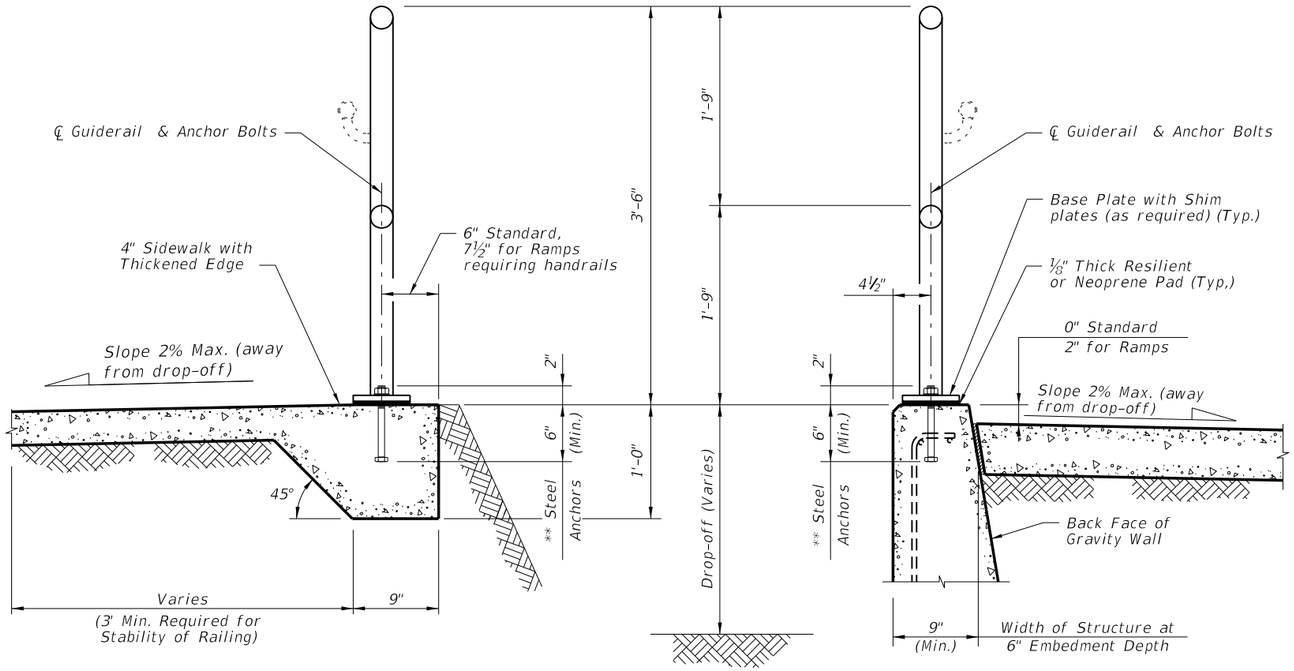

TYPICAL SECTION ON CONCRETE SIDEWALK

TYPICAL SECTION ON GRAVITY WALL
(Other Retaining Walls Similar)

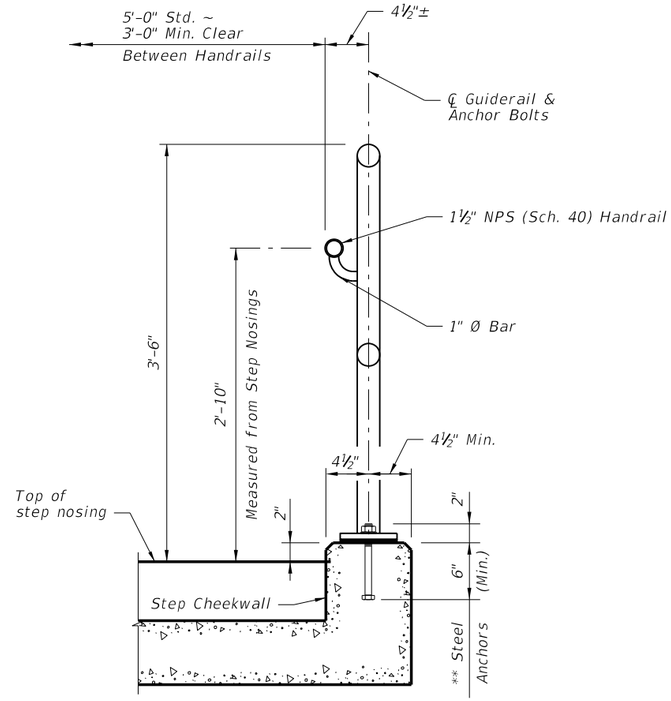

TYPICAL SECTION ON STEPS & STAIRS

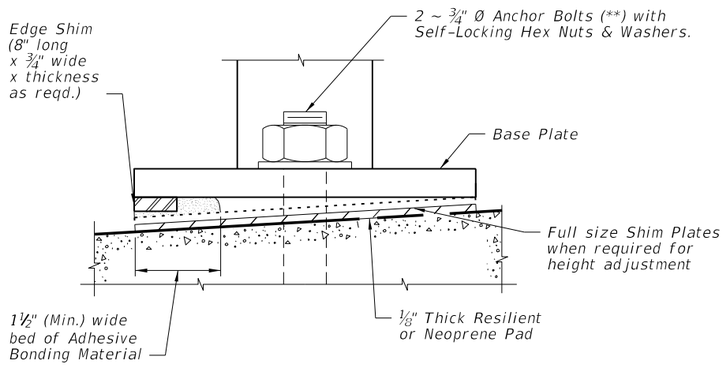

DETAIL "F" (OPTIONAL SHIMMING DETAIL
FOR CROSS SLOPE CORRECTION)
(Used in lieu of Beveled Shim Plates)

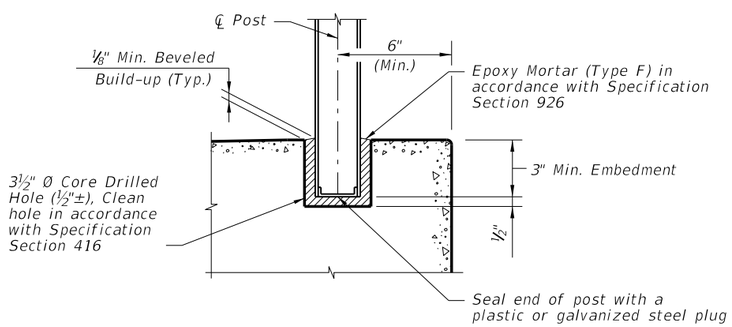

OPTIONAL SIDEWALK ANCHORAGE DETAIL

NOTES:
** 2 ~ ¾" Ø x 8" Steel Anchors:
Galvanized Steel Bolts (As Shown) (C-I-P); Galvanized U-Bolts Permitted (C-I-P); Galvanized Adhesive Anchors Permitted (***); Expansion Anchors Not Permitted.
*** Adhesive anchors shall be fully threaded headless anchor bolts set in drilled holes (manufacturer recommended diameter) with an Adhesive Bonding Material System in accordance with Specification Section 937 and installed in accordance with Specification Section 416. The minimum embedment is 6".

C:\d\projects\standards\roadway\00800-s\00880-05.dgn
rd960rh
2:12:29 PM
6/28/2012

LAST REVISION	REVISION	DESCRIPTION:		FDOT DESIGN STANDARDS 2013	STEEL PIPE GUIDERAIL	INDEX NO.	SHEET NO.
01/01/11						880	5

NOTES

A. DESIGN SPECIFICATIONS:
1. AASHTO LRFD Specifications for Highway Bridges.
2. FDOT Structures Manual (Current Edition).
3. Florida Department of Transportation's Plans Preparation Manual, Volume I (Current Edition).

B. DESIGN CRITERIA:
The Precast Sound Barriers are pre-designed based on criteria in the Structures Manual, Volume I.

C. CONCRETE AND GROUT:
1. Concrete Class and Compressive Strength:
   a. Cast-In-Place Collars: Class IV (f'c = 5500 psi)
   b. Precast Panels, Collars and Post Caps: Class IV (f'c = 5500 psi)
   c. Posts: Class IV (f'c = 5500 psi)
2. Grout for Auger Cast Piles:
   a. Maximum Working Compressive Strength = 2200 psi
   b. Minimum 28 Day Strength = 5500 psi
3. Minimum Compressive Strength for Form Removal and Handling of Posts and Panels:
   a. 2,500 psi for horizontally cast post and panels.
   b. 2,000 psi for vertically cast panels or when tilt-up form tables are used for horizontally cast panels.

D. REINFORCING STEEL:
1. In addition to the requirements of Specification Section 415, tie post and pile stirrups at the following locations as a minimum:
   a. Post Stirrups – Tie at all four corner bars and at every third interior bar intersection.
   b. Pile Stirrups – Tie to the main vertical reinforcing at alternate intersections for circular configurations and for rectangular configurations at the four corners and at every third interior bar intersection.

E. SURFACE FINISHES AND AESTHETIC REQUIREMENTS:
1. See Sound Barrier Data Tables in the Plans for project requirements.

F. PILING:
Construct Auger Cast Piling in accordance with the Plans and Specification Section 455.

G. UTILITIES:
Field verify the locations of all overhead and underground utilities shown in the Wall Control Drawings.

H. NEOPRENE PADS AND RESILIENT PADS:
1. Neoprene Pads for Panel Bearing Points Between the Stacked Panels:
   The Neoprene pads for the panel bearing points shall be Plain Pads, Grade 50 durometer hardness in accordance with Specifications Sections 932-2.
2. Neoprene Pads for Collar Bearing Points:
   Neoprene Pads shall be Fiber Reinforced Pads, with a durometer hardness between Grade 50 and Grade 80, in accordance with Specification Section 932-2. Plain Pads may be substituted for Fiber Reinforced Pads when sufficient bearing area is available on the concrete collar, as follows:
   a. 10' post spacing: 4" x 4" x ½" Plain Pads, Grade 50 durometer hardness.
   b. 20' post spacing and < 18' wall height: 4" x 4" x ½" Plain Pads, Grade 50 durometer hardness.
   c. 20' post spacing and ≥ 18' wall height: 4" x 5" x ½" Plain Pads, Grade 50 durometer hardness.

I. CASTING TOLERANCES:
1. Overall Height & Width: +/- ¼"
2. Thickness: +/- ¼"
3. Plane of side mold: +/- 1/16"
4. Openings: +/- ½"
5. Out of Square: ⅛" per 6 ft., but not more than ⅜" total along any side
6. Warping: 1/16" per foot distance to nearest corner
7. Bowing: 1/240 panel dimension
8. Surface Smoothness for Type "A" (Smooth) Surface Texture Option: +/- 1/16" along a 10 ft. straightedge.

J. SOUND BARRIER NOTES:
1. Post spacing is measured from centerline to centerline of auger cast piles. For this Index, posts and piles have been designed for a spacing between a minimum of 10 ft and a maximum of 20 ft. If pile spacing is greater than 10 ft, use post design based on a 20 ft spacing.
2. Total height of wall ranges from a minimum of 12 ft to a maximum of 22 ft. The height of individual panels must be a maximum of 12 ft and a minimum of 6 ft, except for the following. For total wall heights less than 14 ft high, the minimum bottom panel height is 4 ft when graphics must be accommodated in the upper panel. If a fire hose access hole is required, the bottom panels must be a minimum of 6 feet.
3. Where special graphics are required, locate horizontal panel joints outside of graphics. Where possible, hold horizontal panel joints at a constant elevation.

6/28/2012 2:12:34 PM rd960rh C:\d\projects\standards\structures\2013book\05200-01of16.dgn

LAST REVISION	REVISION	DESCRIPTION:		FDOT DESIGN STANDARDS 2013	PRECAST SOUND BARRIERS	INDEX NO.	SHEET NO.
07/01/12						5200	1

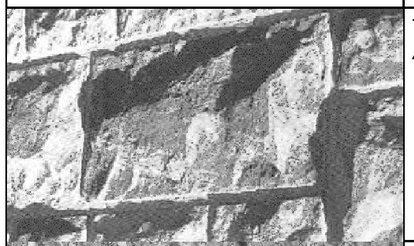

Type "A"
SMOOTH

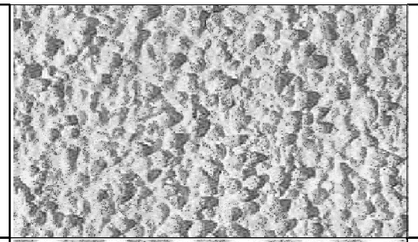

Type "F"
PEA GRAVEL

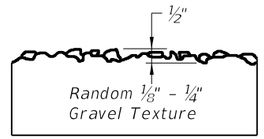

Type "B"
ASHLAR STONE

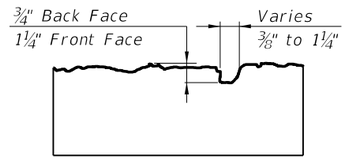

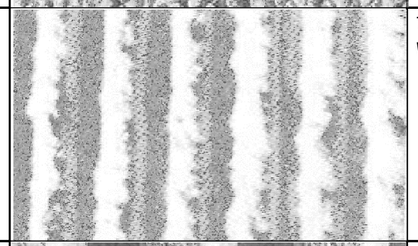

Type "G"
VERTICAL FRACTURED FIN

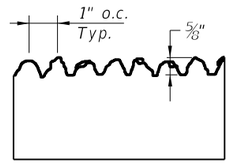

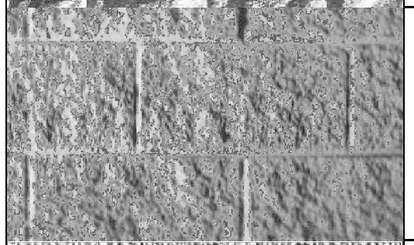

Type "C"
SPLIT FACE RUNNING BOND BLOCK

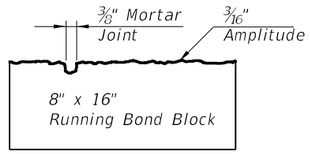

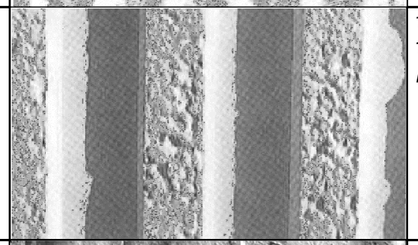

Type "H"
TRAPEZOID VERTICAL FINS W/ FRACTURED FACE (COLORADO DRAG AGGREGATE)

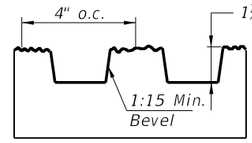

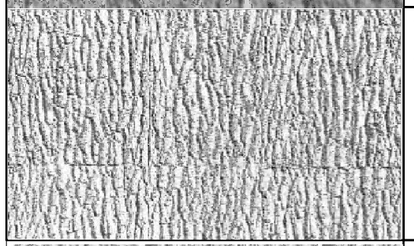

Type "D"
FRACTURED GRANITE

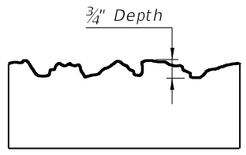

Type "I"
CUT CORAL BLOCK (RUNNING BOND)

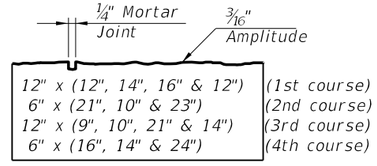

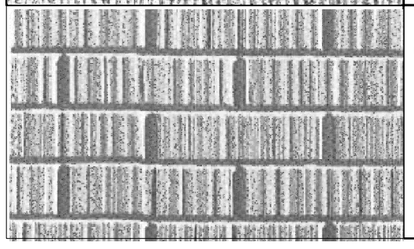

Type "E"
WIRE-CUT BRICK

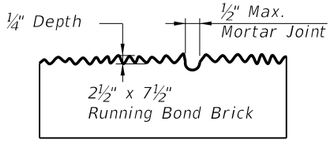

NOTES:

1. Surfaces shall be formed, rolled, or pressed using form liners in accordance with the Plans and Specifications for Class 3 Surface Finish.
2. See Sound Barrier Data Tables for project aesthetic requirements.

TEXTURE OPTIONS

6/28/2012 2:12:36 PM rd960rh C:\d\projects\standards\structures\2013book\05200-02of16.dgn

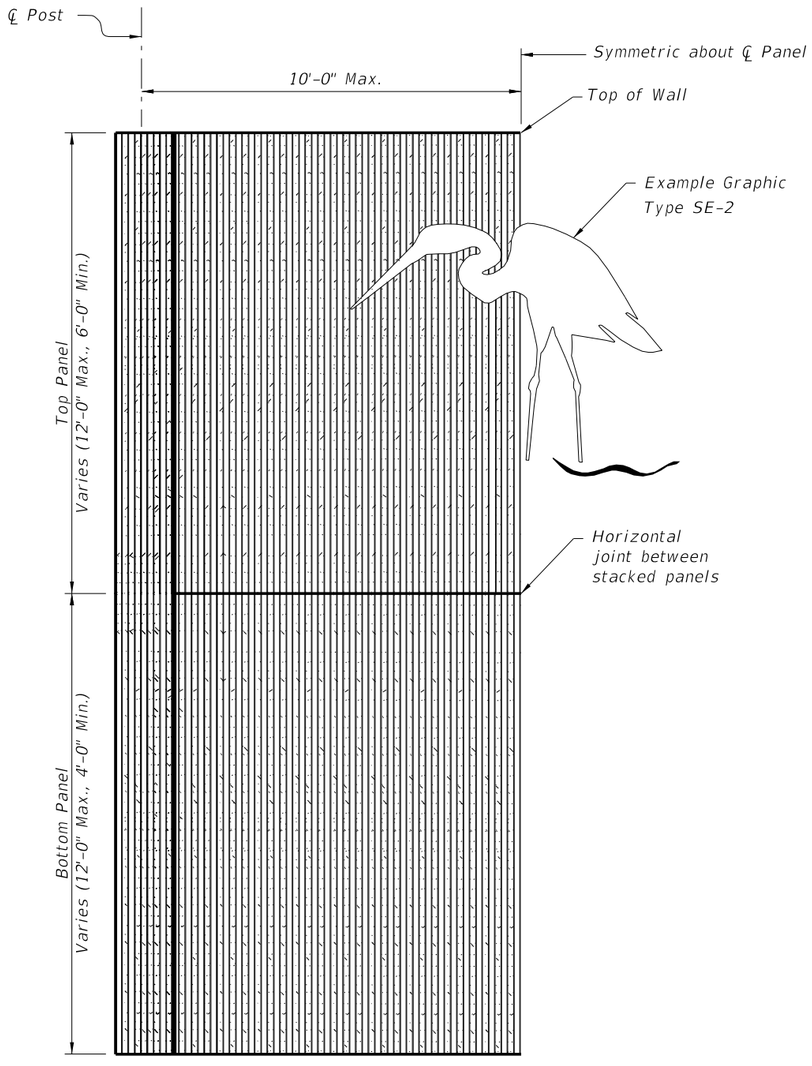

HALF ELEVATION
(Front Face Post and Panel Texture Type "H" shown)
(Graphic Type SE-2 shown)
(Two stacked panels shown, three stacked panels similar)

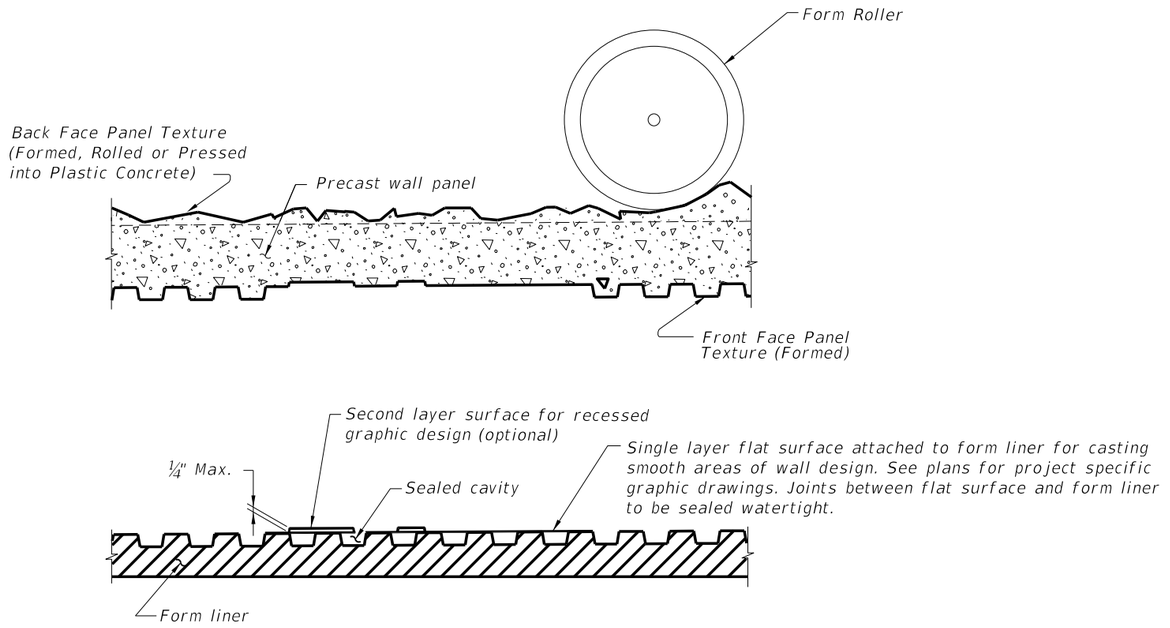

TYPICAL FORMING DETAIL
(Front Face Panel Texture Type "H" shown)
(Back Face Panel Texture Type "D" shown)
(Post Forming Details Similar)

NOTES:

1. *Submit specific form liner samples for approval by the Engineer.*
2. *Textures and graphics shown are for demonstration purposes only. See Sound Barrier Data Tables in the plans for project specific texture and graphic requirements.*

GRAPHICS & TEXTURE DETAILS

LAST REVISION	REVISION	DESCRIPTION:		FDOT DESIGN STANDARDS 2013	PRECAST SOUND BARRIERS	INDEX NO.	SHEET NO.
07/01/12						5200	3

6/28/2012 2:12:46 PM rd960rh C:\d\projects\standards\structures\2013book\05200-03of16.dgn

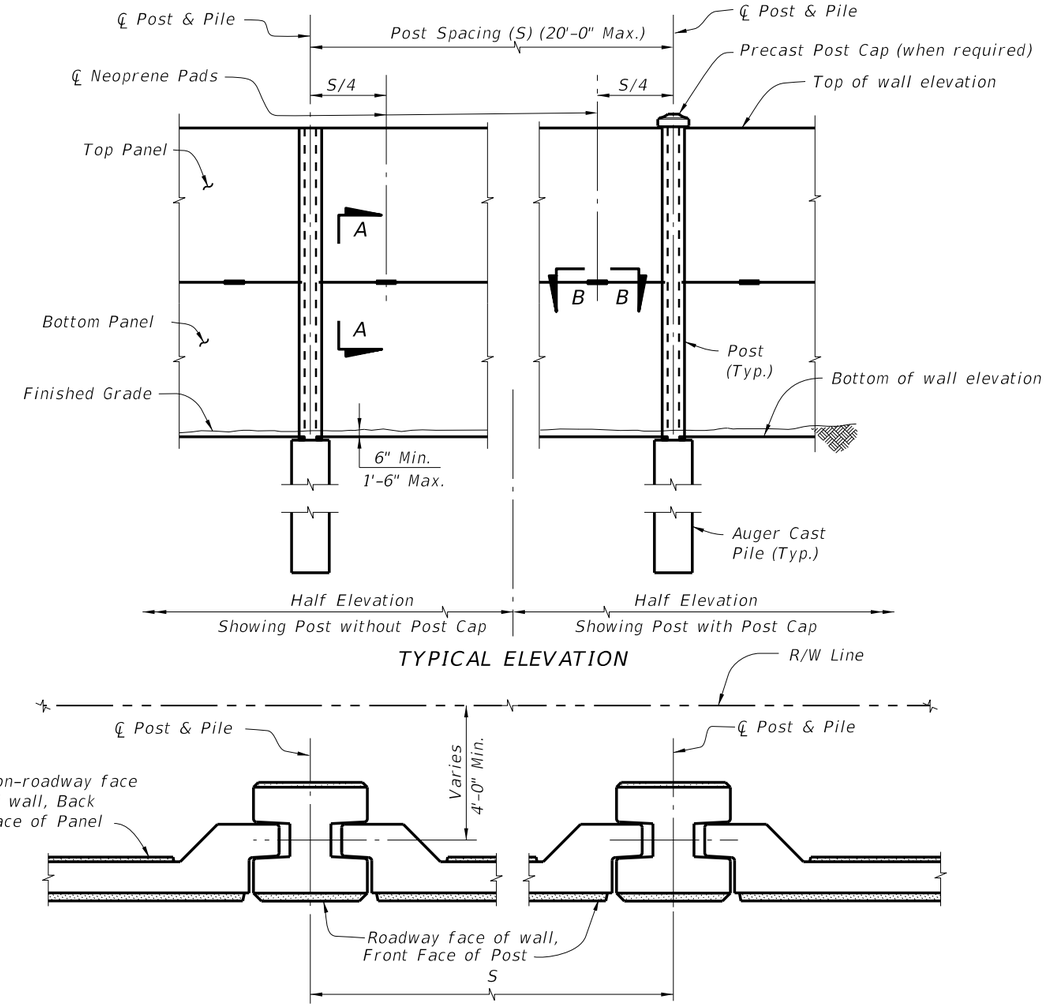

TYPICAL ELEVATION

PLAN
(Showing Flush Panel)

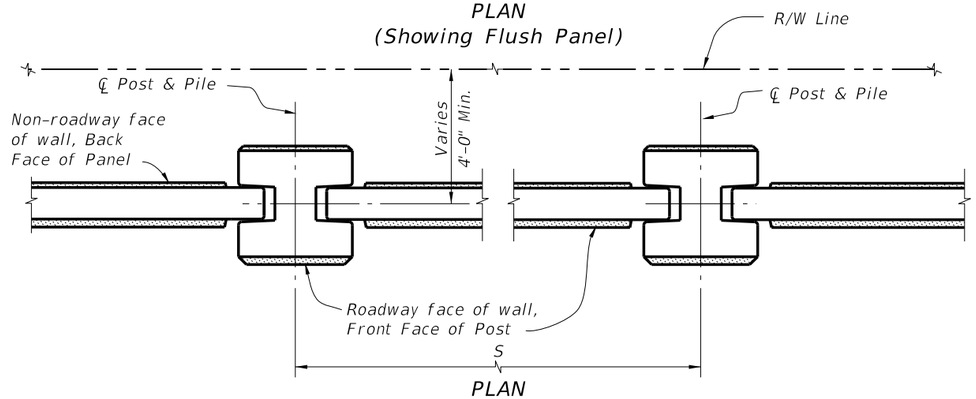

PLAN
(Showing Recessed Panel)

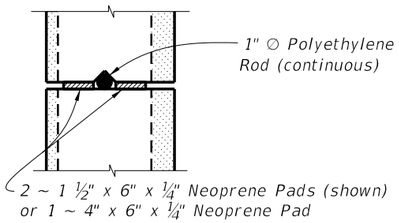

SECTION A-A

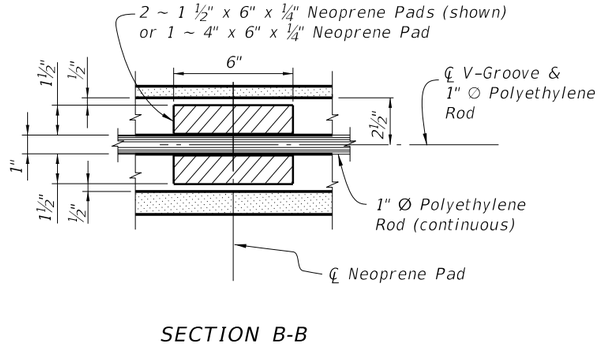

SECTION B-B

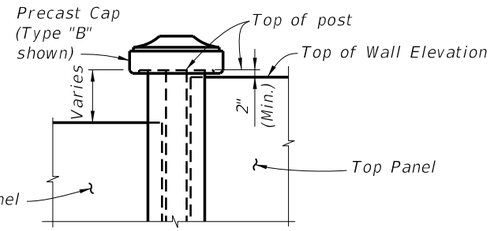

WITH POST CAP

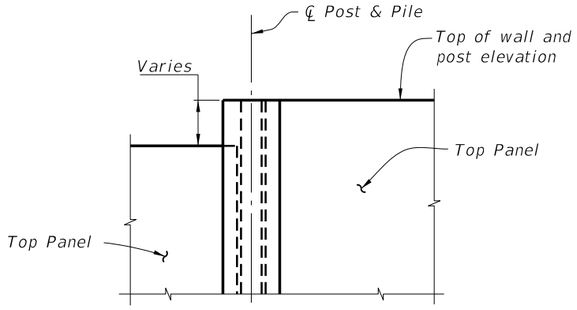

WITHOUT POST CAP

ELEVATION STEP AT TOP OF WALL

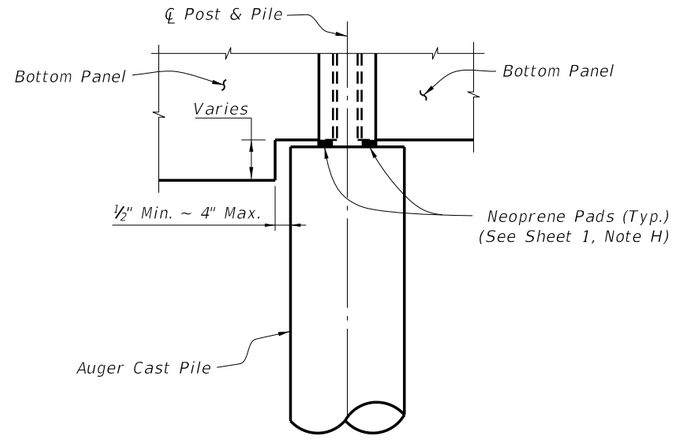

ELEVATION STEP AT BOTTOM OF WALL

TYPICAL DETAILS

C:\d*projects\standards\structures\2013book\05200-04of16.dgn
rd960rh
2:12:48 PM
6/28/2012

LAST REVISION	REVISION	DESCRIPTION:				
07/01/12			FDOT DESIGN STANDARDS 2013	PRECAST SOUND BARRIERS	INDEX NO. 5200	SHEET NO. 4

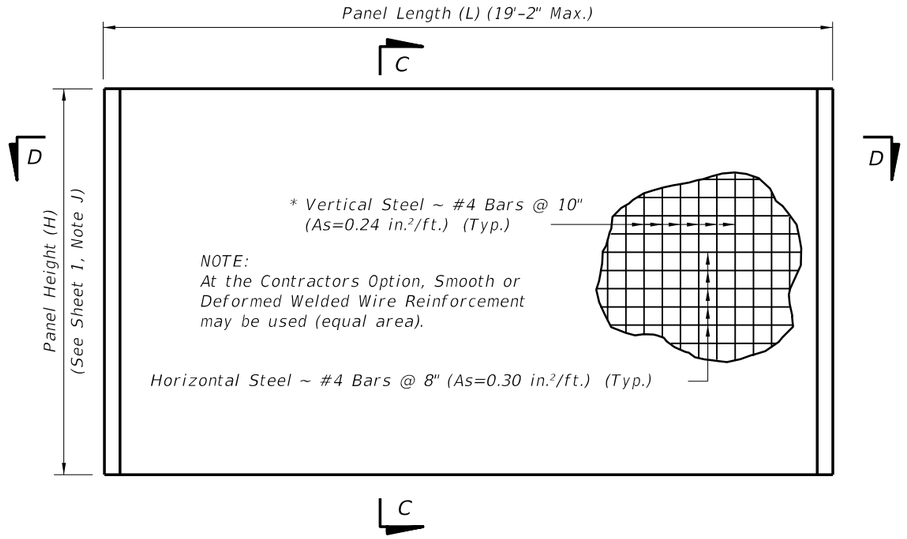

TYPICAL PANEL ELEVATION

* In lieu of utilizing the standard pick up points below, panels may be cast vertically or cast horizontally then tilted upright using tilt-tables prior to lifting from form. In this case, pick points must be placed in the top of panels only and transported maintaining the vertical orientation. If these criteria are met, the vertical steel may be reduced to #4 Bars @ 1'-3" (As=0.15 in.²/ft.).

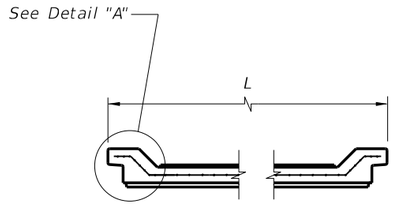

SECTION D-D
(Showing Flush Panel)

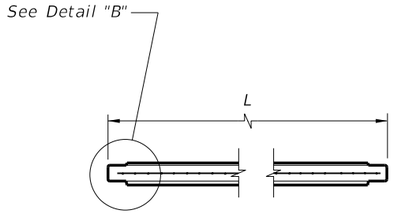

SECTION D-D
(Showing Recessed Panel)

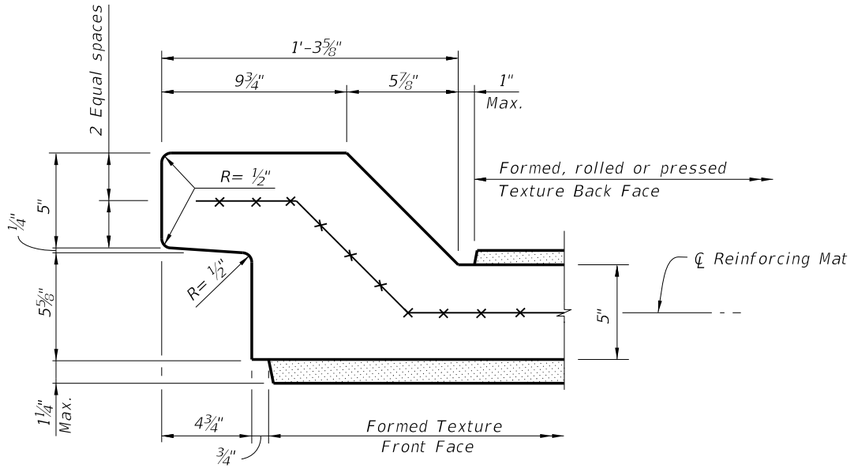

DETAIL "A"
(Typical both ends)

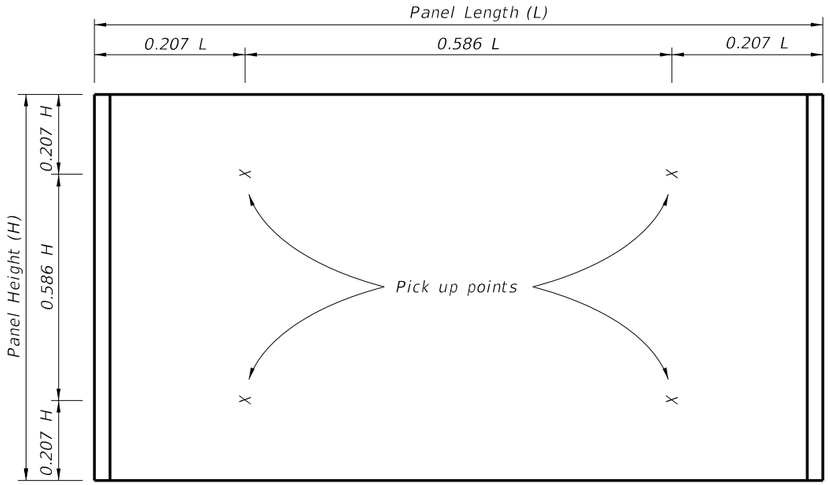

STANDARD PICK UP POINTS FOR PANELS
(Panels shall be rotated about long axis only)

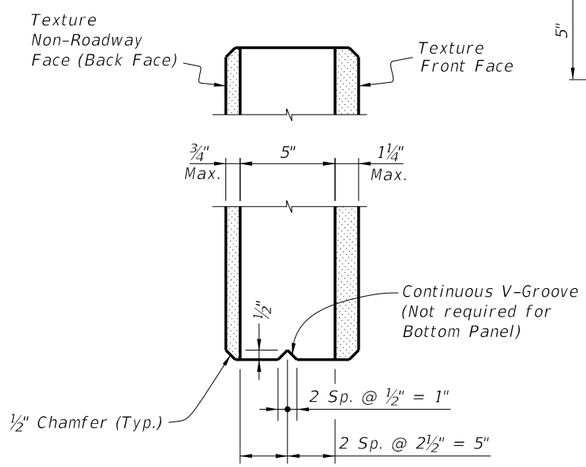

SECTION C-C

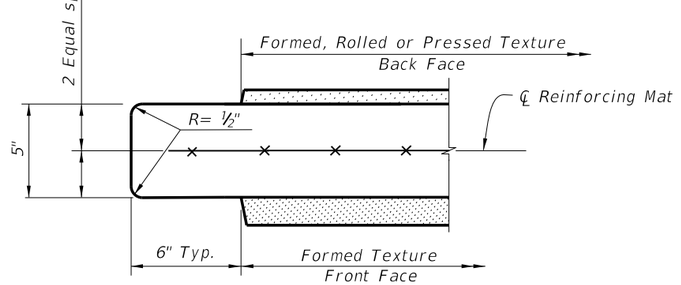

DETAIL "B"
(Typical both ends)

Notes:
1. See Sheet 3 for allowable methods of applying textures.
2. See plans for panel type and aesthetic requirements.

TYPICAL PANEL DETAILS

LAST REVISION	REVISION	DESCRIPTION:		FDOT DESIGN STANDARDS 2013	PRECAST SOUND BARRIERS	INDEX NO.	SHEET NO.
07/01/12						5200	5

6/28/2012 2:12:51 PM rd960rh C:\d\projects\standards\structures\2013book\05200-05of16.dgn

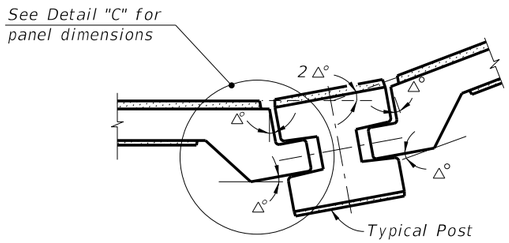

CASE 1
(Interior Angle)

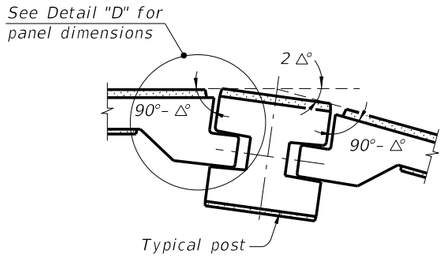

CASE 2
(Exterior Angle)

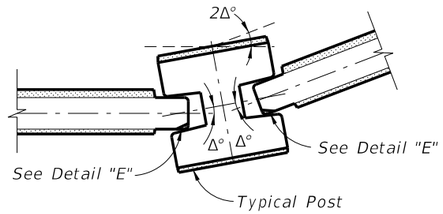

CASE 1
(Interior Angle)

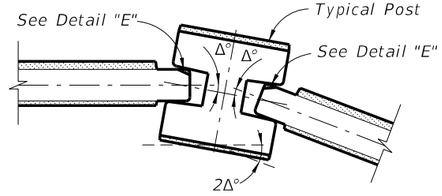

CASE 2
(Exterior Angle)

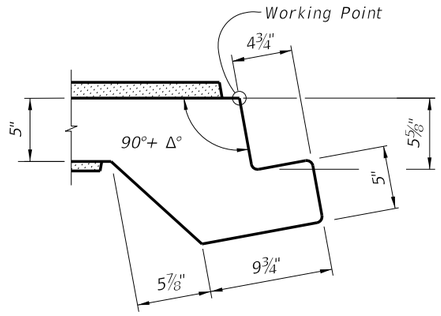

DETAIL "C"

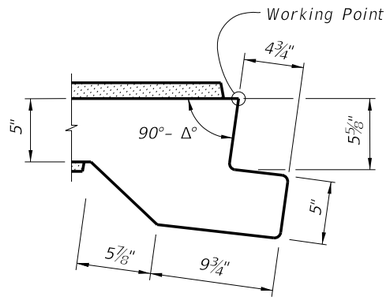

DETAIL "D"

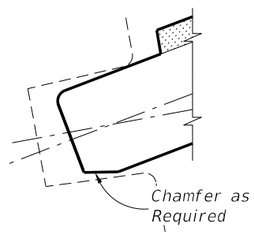

DETAIL "E"
(Back Face Chamfer Shown
Front Face Chamfer Similar)

NOTE:
The shop drawings shall include specific pivoting details of panel ends at locations where the deflection angle (2Δ°) between panels exceeds 7°.

PIVOTING DETAILS
(Flush Panel)

NOTE:
The shop drawings shall include specific pivoting details of panel ends at locations where the deflection angle (2Δ°) between panels exceeds 20°.

PIVOTING DETAILS
(Recessed Panel)

TYPICAL PANEL DETAILS

C:\d\projects\standards\structures\2013book\05200-06of16.dgn
rd960rh
2:12:53 PM
6/28/2012

LAST REVISION	REVISION	DESCRIPTION:			INDEX NO.	SHEET NO.
07/01/12			FDOT DESIGN STANDARDS 2013	PRECAST SOUND BARRIERS	5200	6

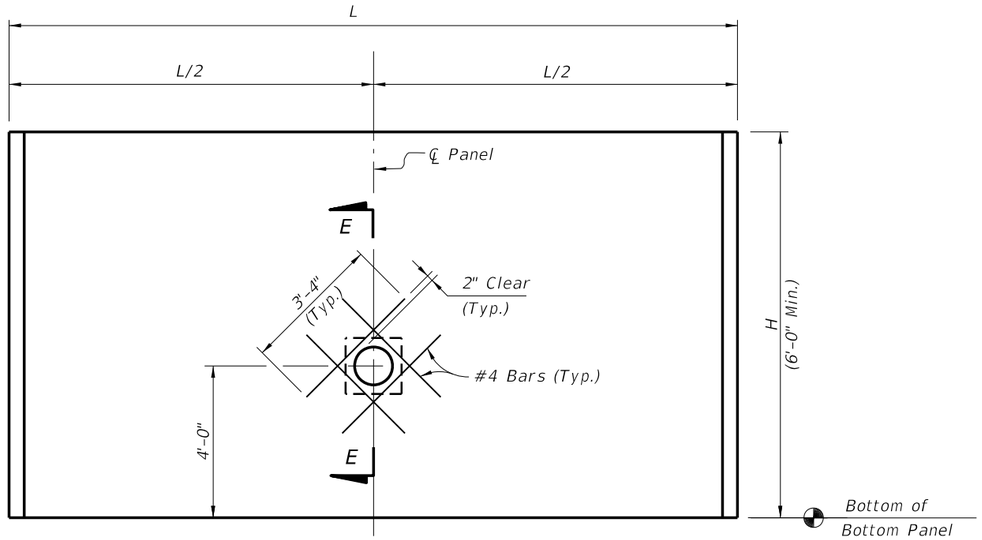

NOTE: Fire Hose Access Hole only to be located at or near fire hydrants

FIRE HOSE ACCESS HOLE TYPICAL DETAIL
(Front Face of Wall Shown)

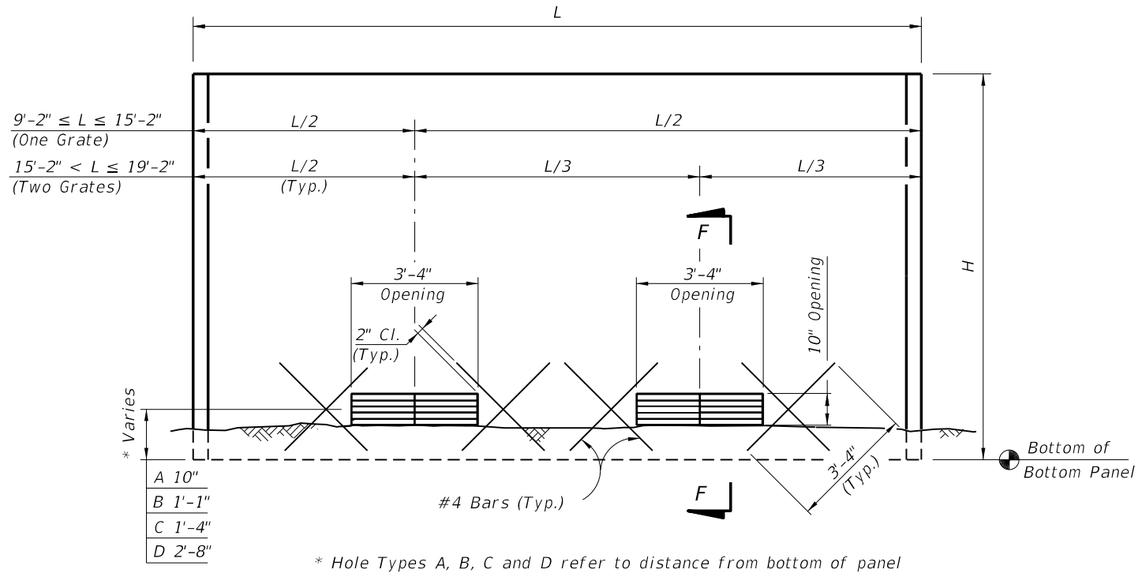

* Hole Types A, B, C and D refer to distance from bottom of panel to center of opening. See Wall Control Drawings in the plans.

DRAINAGE HOLES TYPES A, B, C & D
(Front Face of Wall Shown)
(Two Holes Shown, One Hole Similar)

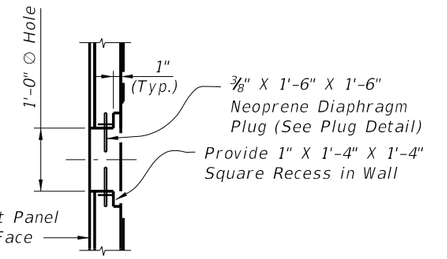

SECTION E-E

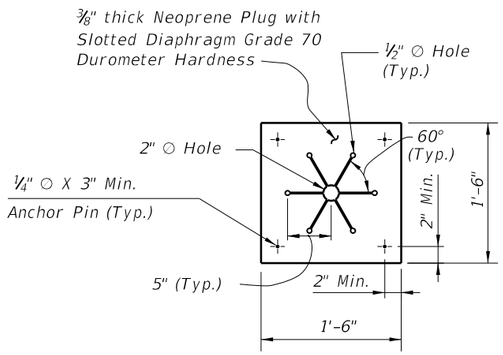

PLUG DETAIL

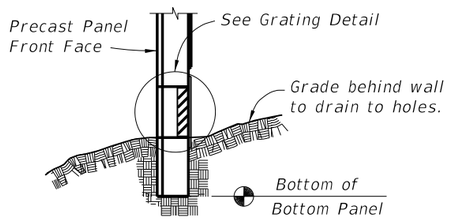

SECTION F-F

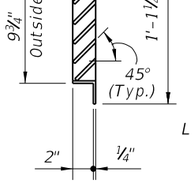

SECTION G-G

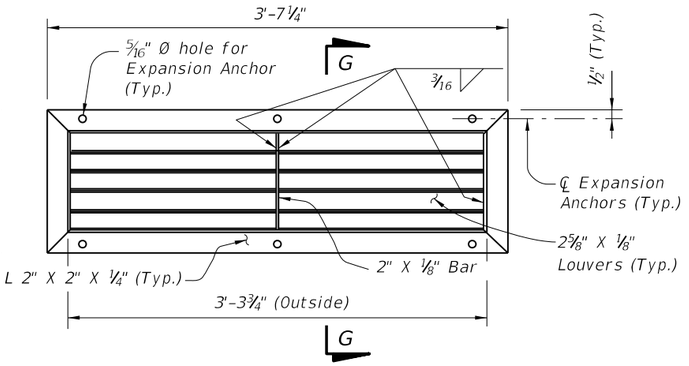

GRATING DETAIL

GRATING NOTES:
1. Grating shall be ASTM A36 steel welded in accordance with the current edition of ANSI/AWS D1.1 Steel Welding Code. Hot-dip galvanize grate after fabrication in accordance with Specification Section 962-9.
2. Expansion Anchors: Use ¼" Ø x 3" ASTM A307, vandal resistant, hot-dip galvanized expansion anchors to connect grates to panels.
3. Grating recessed with back face of wall.

FIRE HOSE ACCESS & DRAINAGE HOLE DETAILS

LAST REVISION	REVISION	DESCRIPTION:			INDEX NO.	SHEET NO.
07/01/12			FDOT DESIGN STANDARDS 2013	PRECAST SOUND BARRIERS	5200	7

C:\d_projects\standards\structures\2013book\05200-07of16.dgn rd960rh 2:12:55 PM 6/28/2012

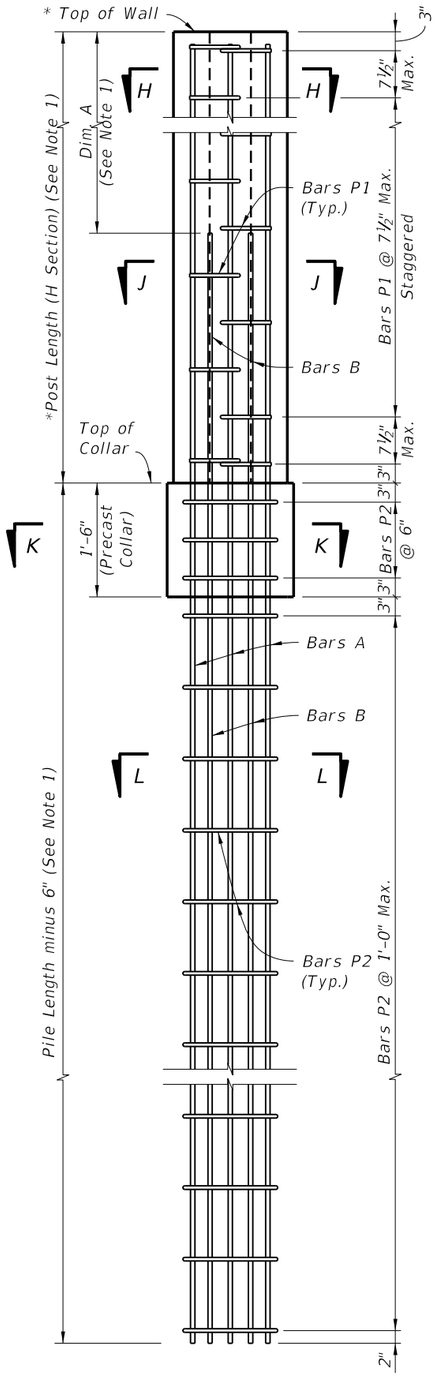

TYPICAL POST

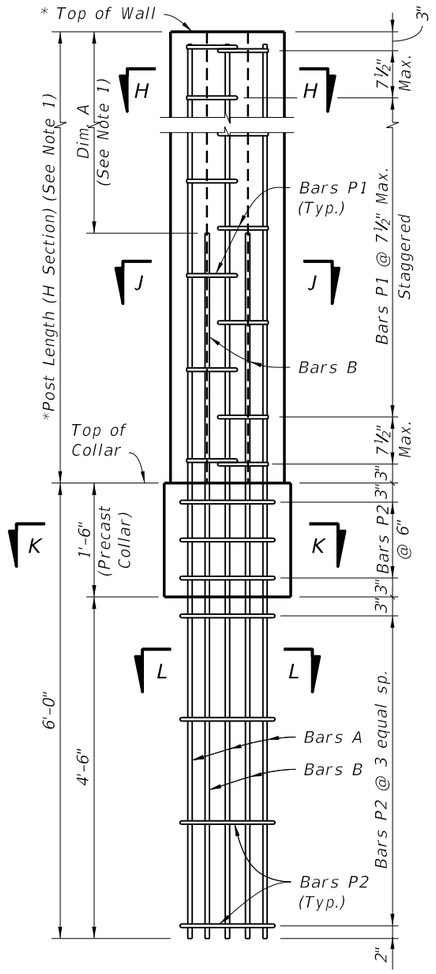

LOW CLEARANCE OPTION

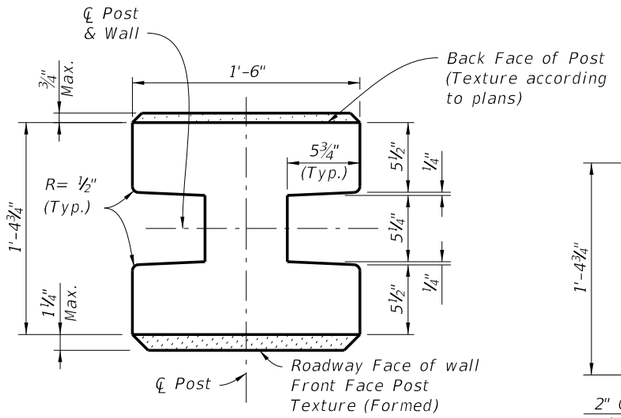

TYPICAL POST SECTION
(H Section)

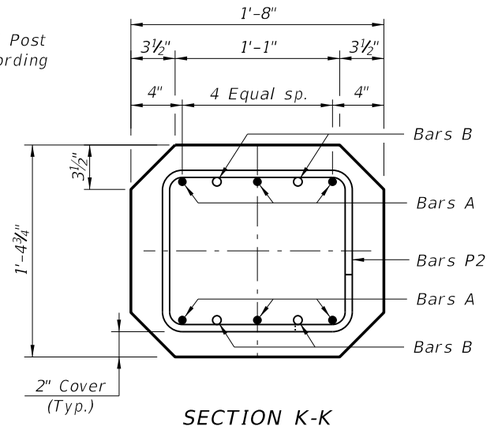

SECTION K-K
(Collar Section)

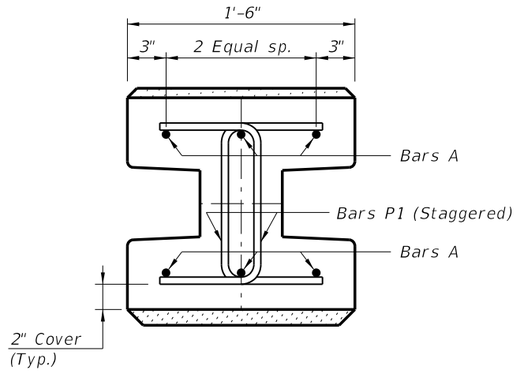

SECTION H-H

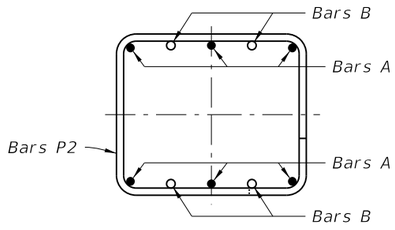

SECTION L-L

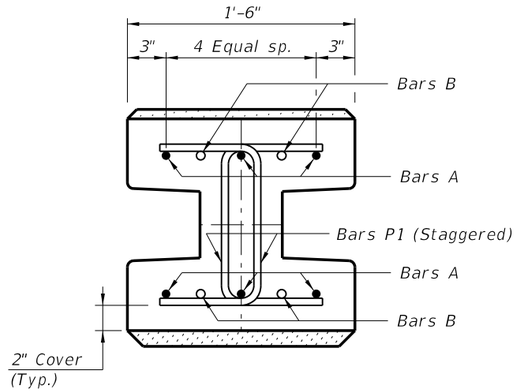

SECTION J-J

NOTES:
1. For Table of Dimensions and Reinforcing Steel, see Sheets 15 and 16.

* Extend Post 2" above top of high side wall panel when post caps are shown in plans. See Sheet 4, "ELEVATION STEP AT TOP OF WALL".

STANDARD POST REINFORCEMENT
(Standard Post Shown, 45° Corner Posts Similar)

STANDARD POST DETAILS

C:\d\projects\standards\structures\2013book\05200-08of16.dgn
rd960rh
2:12:57 PM
6/28/2012

LAST REVISION	REVISION	DESCRIPTION:			INDEX NO.	SHEET NO.
07/01/12			FDOT DESIGN STANDARDS 2013	PRECAST SOUND BARRIERS	5200	8

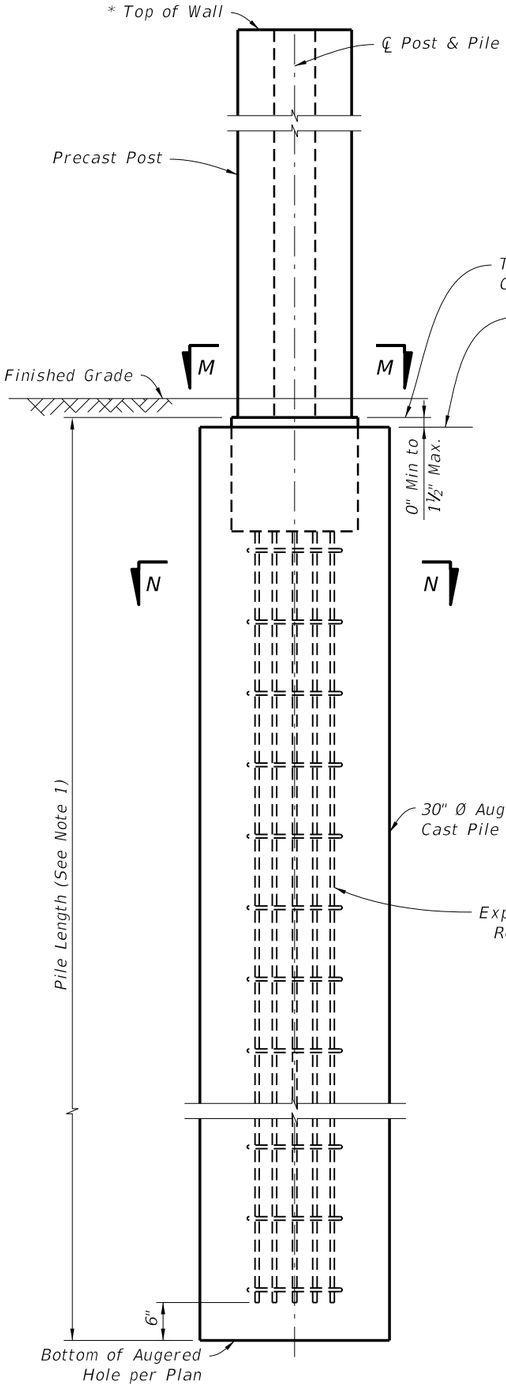

TYPICAL POST

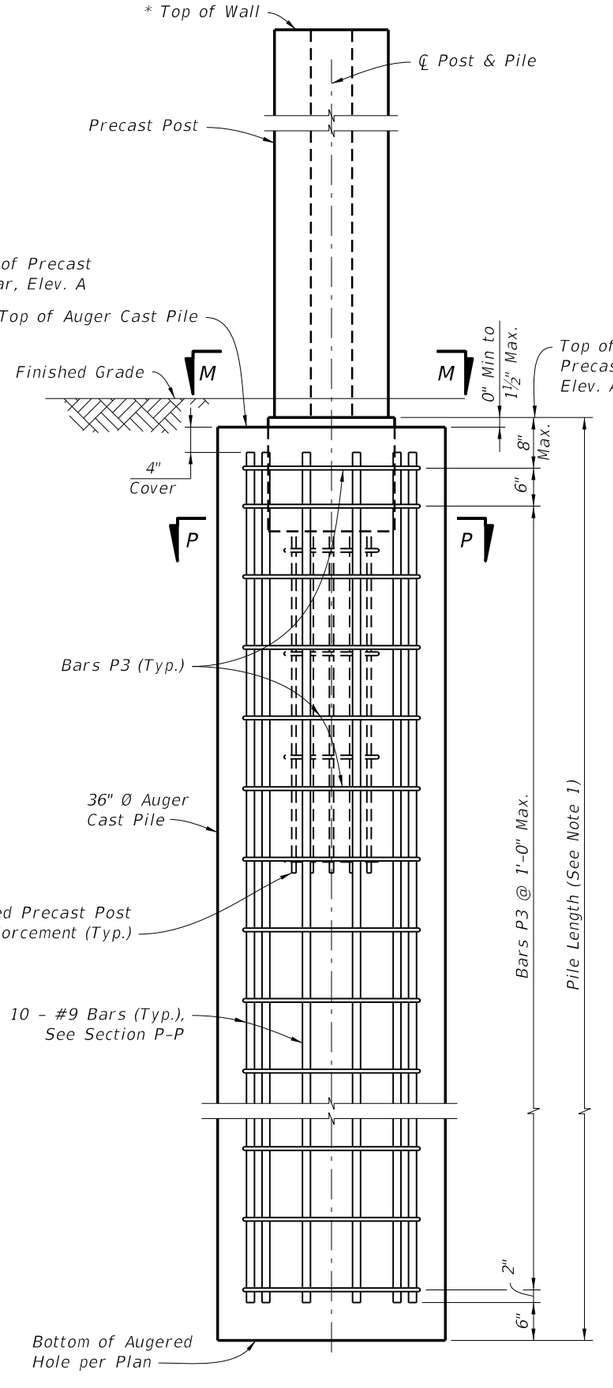

LOW CLEARANCE OPTION

STANDARD POST PLACEMENT IN AUGER CAST PILE
(Standard Post Shown, 45° Corner Posts Similar)

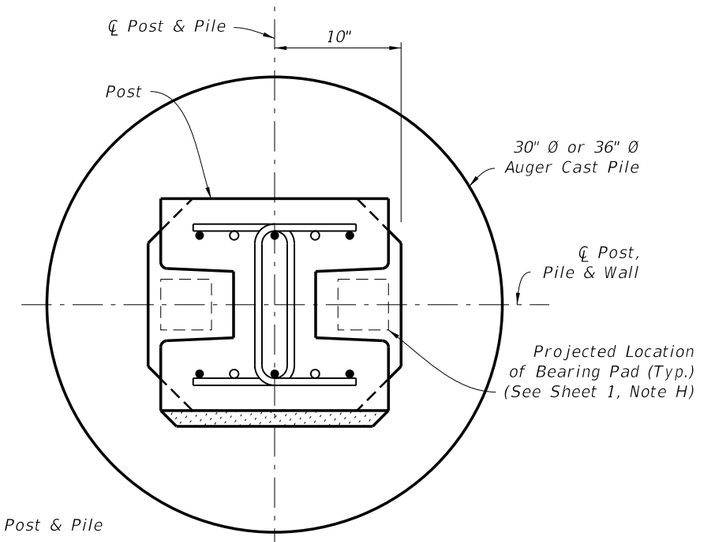

SECTION M-M
(Standard Post)

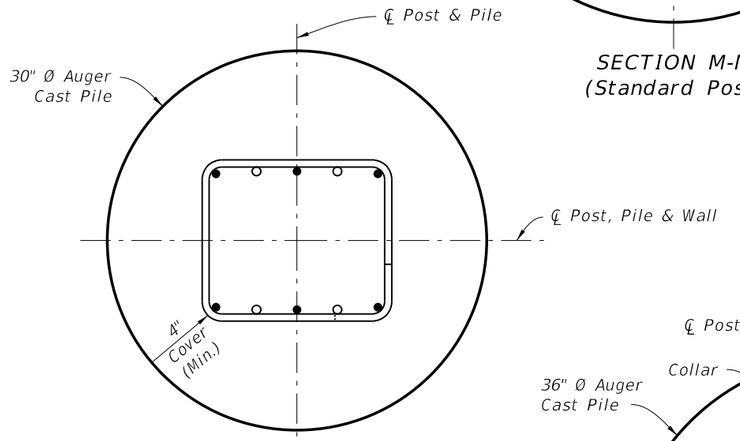

SECTION N-N
(Standard Post)

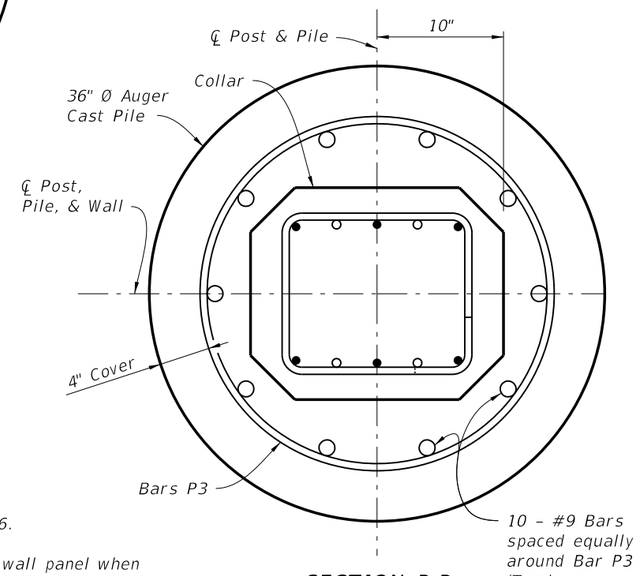

SECTION P-P
(Standard Post)

NOTES:
1. For Pile Lengths, see Sheets 15 and 16.

* Extend Post 2" above top of high side wall panel when post caps are shown in plans. See Sheet 4, "ELEVATION STEP AT TOP OF WALL".

POST PLACEMENT & PILE REINFORCING STEEL DETAILS

LAST REVISION	REVISION	DESCRIPTION:		FDOT DESIGN STANDARDS 2013		INDEX NO.	SHEET NO.
07/01/12						5200	9

6/28/2012 2:12:59 PM rd960rh C:\d\projects\standards\structures\2013book\05200-09of16.dgn

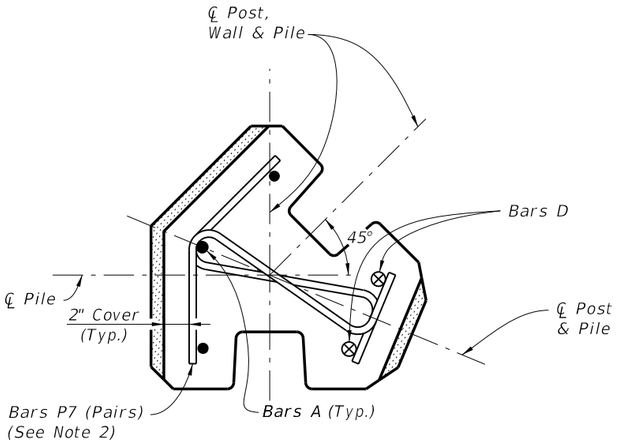

SECTION H-H
(45° Corner Post)

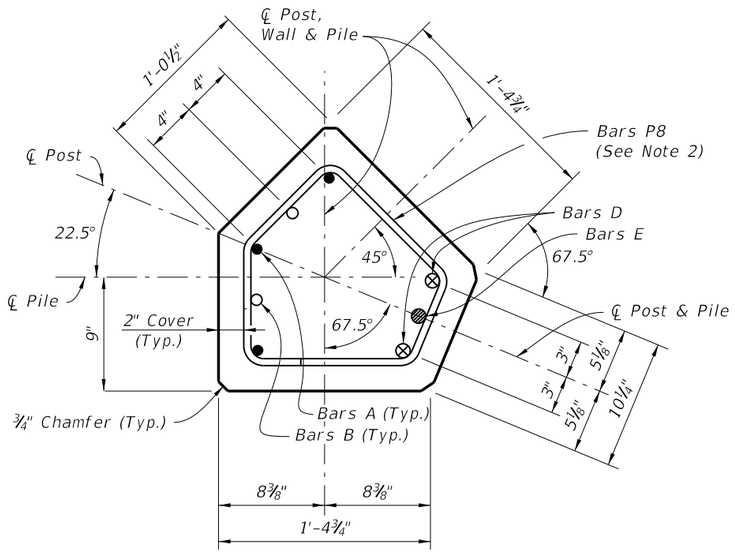

SECTION K-K
(Collar Section, 45° Corner Post)

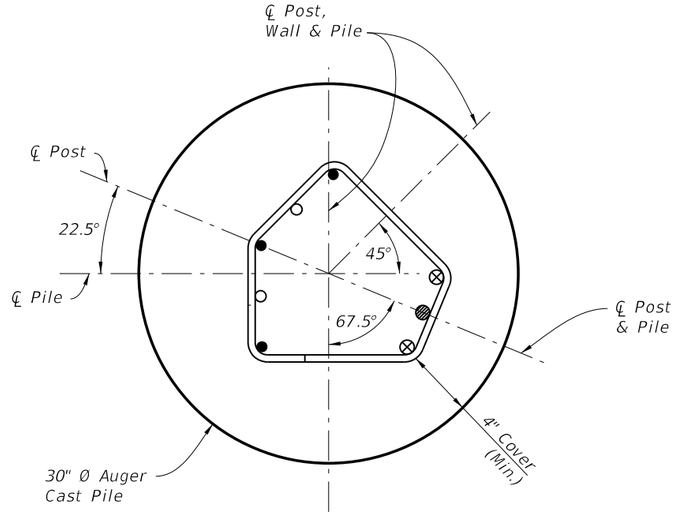

SECTION N-N
(45° Corner Post)

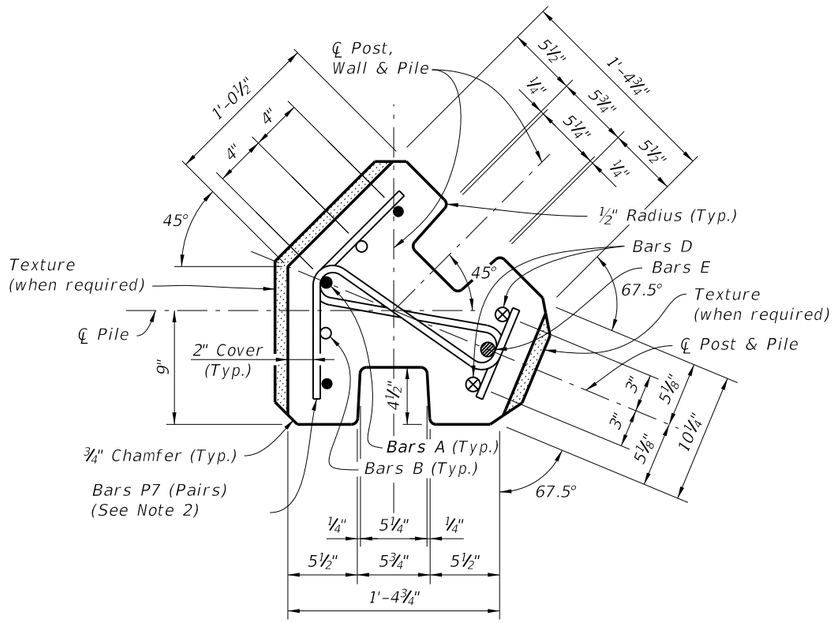

SECTION J-J
(45° Corner Post)

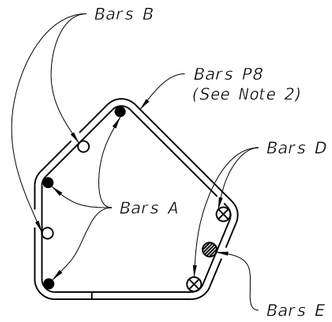

SECTION L-L
(45° Corner Post)

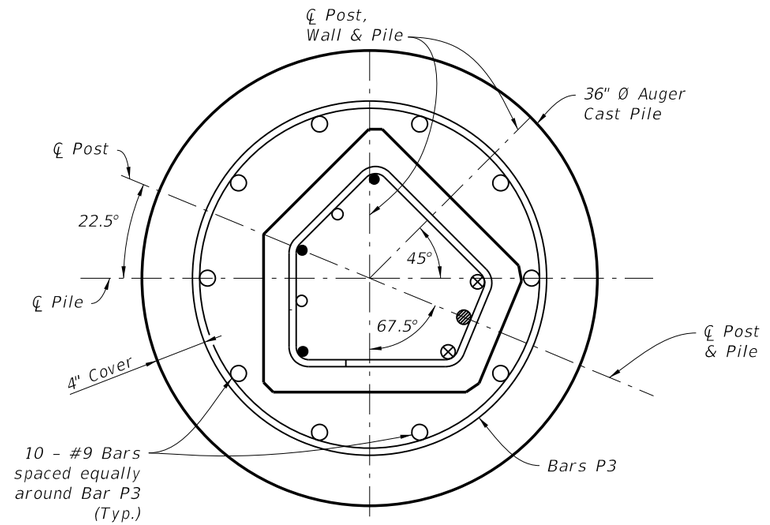

SECTION P-P
(45° Corner Post)

45° POST NOTES:
1. For Post & Pile Lengths and Table of Reinforcing Steel, see Sheets 15 & 16.
2. Reference Sheets 8 & 9 for location of Sections.
   Space Bars P7 as shown for Bars P1.
   Space Bars P8 as shown for Bars P2.
3. For texture thickness, match with appropriate Panel face.

45° POST DETAILS

45° POST PLACEMENT IN AUGER CAST PILE

45° CORNER POST DETAILS

C:\d\projects\standards\structures\2013book\05200-10of16.dgn
rd960rh
2:13:01 PM
6/28/2012

LAST REVISION	REVISION	DESCRIPTION:			INDEX NO.	SHEET NO.
07/01/12			FDOT DESIGN STANDARDS 2013	PRECAST SOUND BARRIERS	5200	10

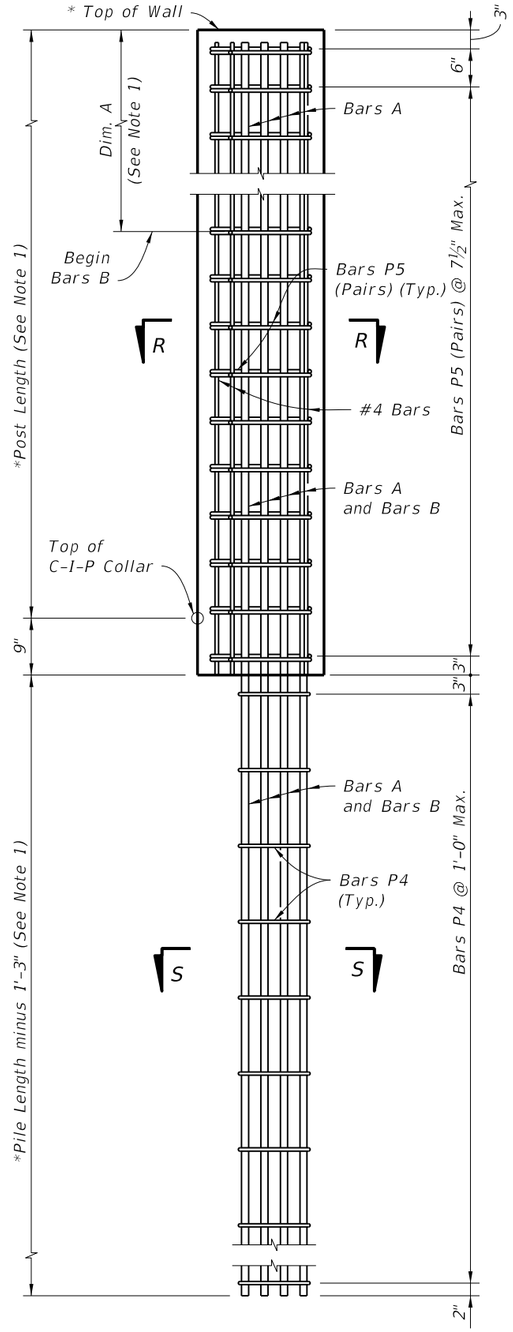

TYPICAL POST

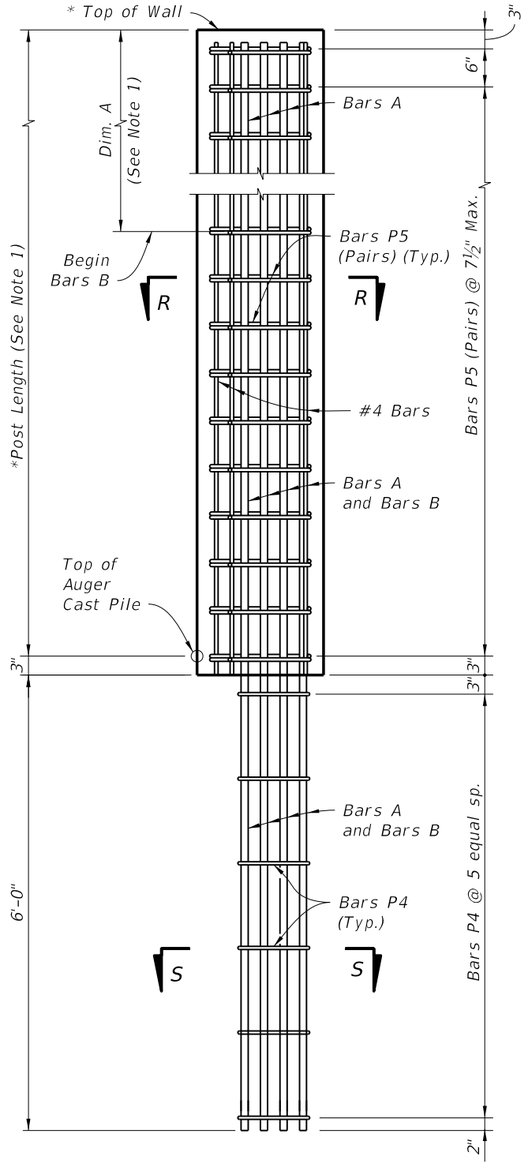

LOW CLEARANCE OPTION

90° CORNER POST REINFORCMENT

(Post Surface Features Not Shown For Clarity)

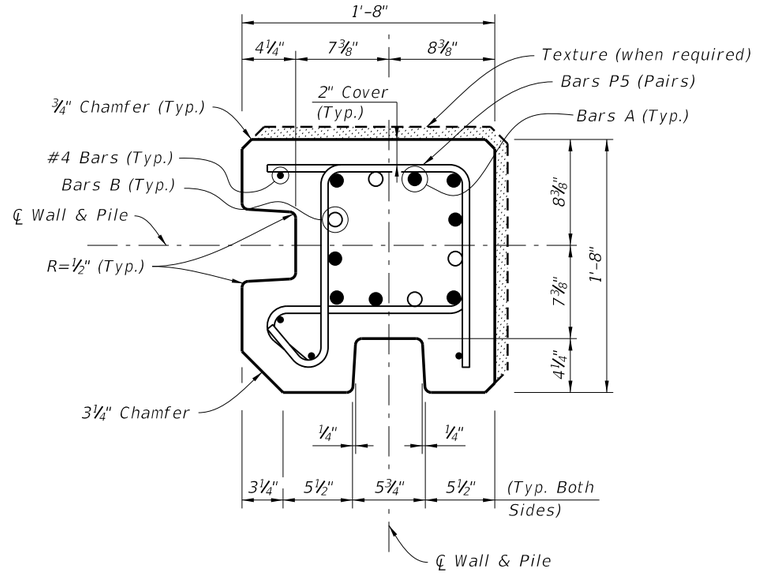

SECTION R-R

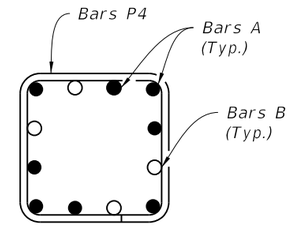

SECTION S-S

90° CORNER POST NOTES:

1. *For Table of Dimensions and Reinforcing Steel, see Sheet 15 & 16.*
2. *Reduce typical panel length by 3½" at each 90° Corner Post.*
3. *For texture thickness, match appropriate Panel face.*

* *Extend Post 2" above top of high side wall panel when post caps are shown in plans. See Sheet 4, "ELEVATION STEP AT TOP OF WALL".*

90° CORNER POST DETAILS

LAST REVISION	REVISION	DESCRIPTION:				
07/01/12			FDOT DESIGN STANDARDS 2013	PRECAST SOUND BARRIERS	INDEX NO. 5200	SHEET NO. 11

C:\d\projects\standards\structures\2013book\05200-11of16.dgn
rd960rh
2:13:04 PM
6/28/2012

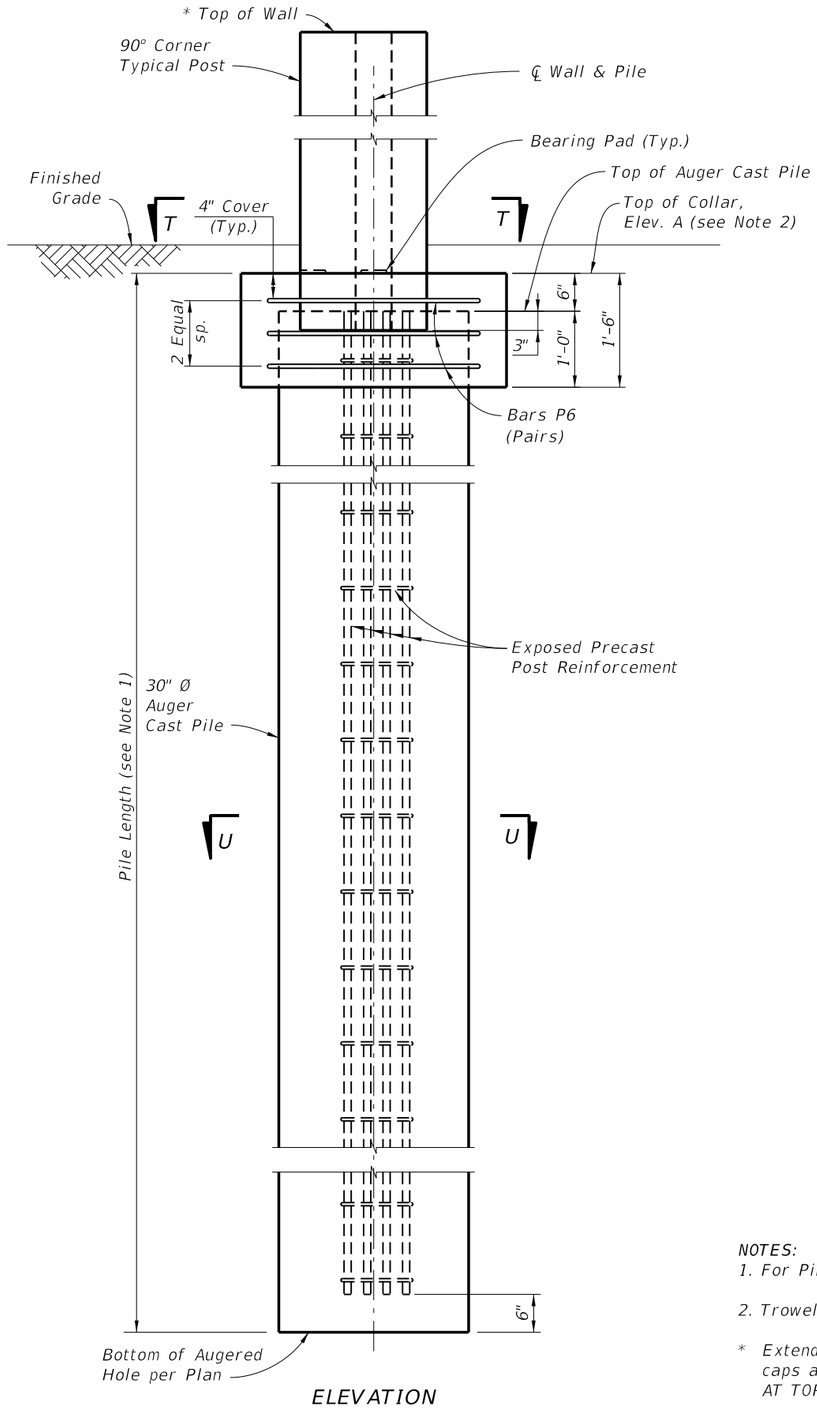

ELEVATION

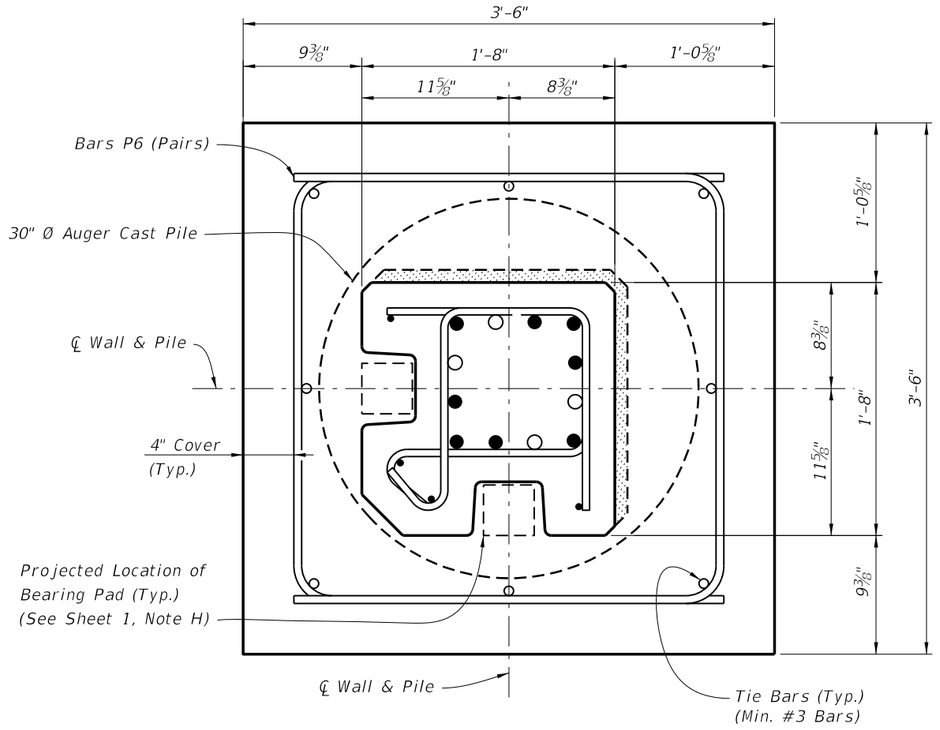

SECTION T-T

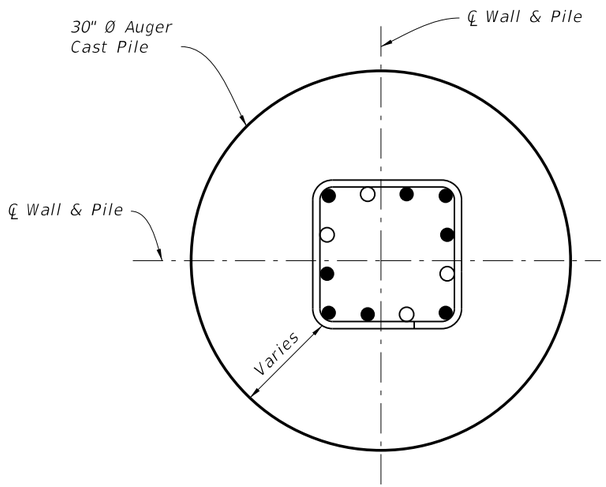

SECTION U-U

NOTES:
1. For Pile Lengths, see Sheets 15 and 16.

2. Trowel Finish top of Collar to allow placement of Bearing Pads.

* Extend Post 2" above top of high side wall panel when post caps are shown in plans. See Sheet 4, "ELEVATION STEP AT TOP OF WALL".

90° CORNER TYPICAL POST PLACEMENT DETAILS

LAST REVISION	REVISION	DESCRIPTION:		FDOT DESIGN STANDARDS 2013	PRECAST SOUND BARRIERS	INDEX NO.	SHEET NO.
07/01/12						5200	12

6/28/2012 2:13:08 PM rd960rh C:\d\projects\standards\structures\2013book\05200-12of16.dgn

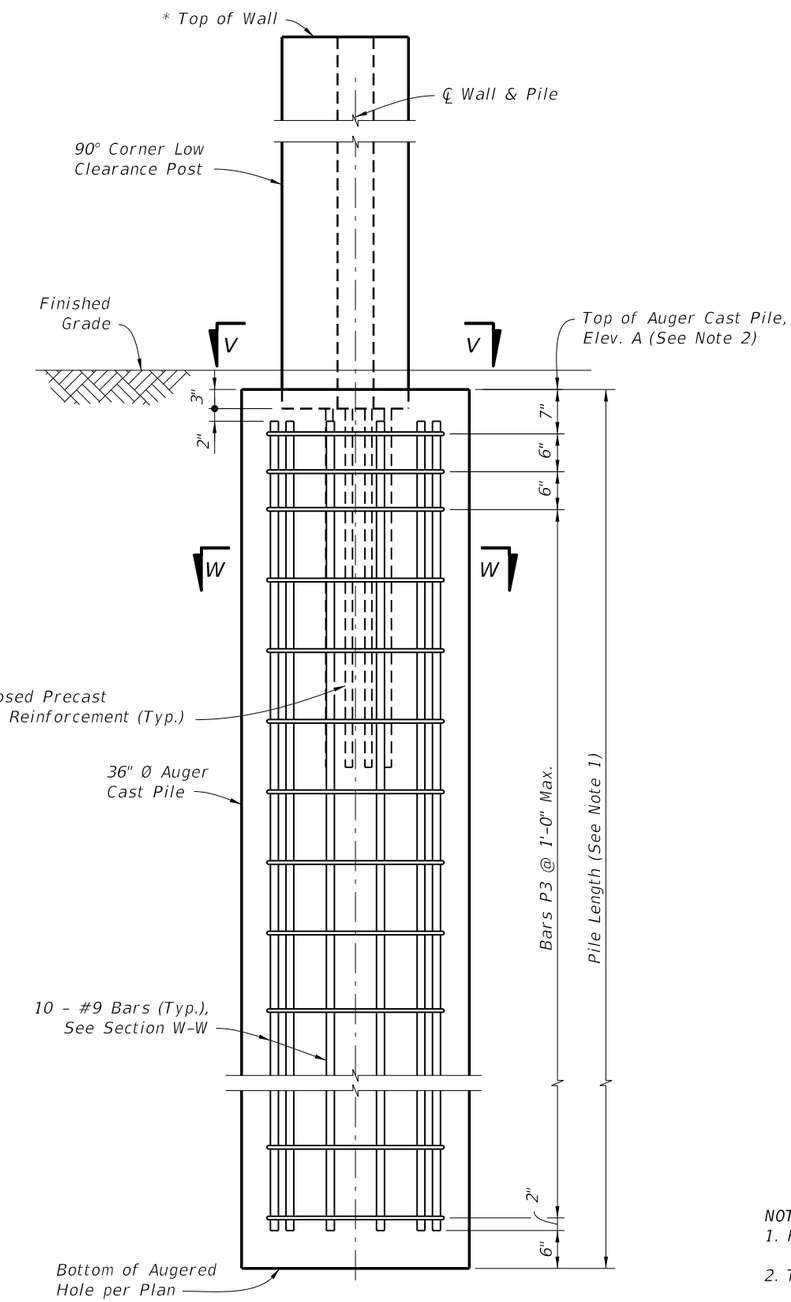

ELEVATION

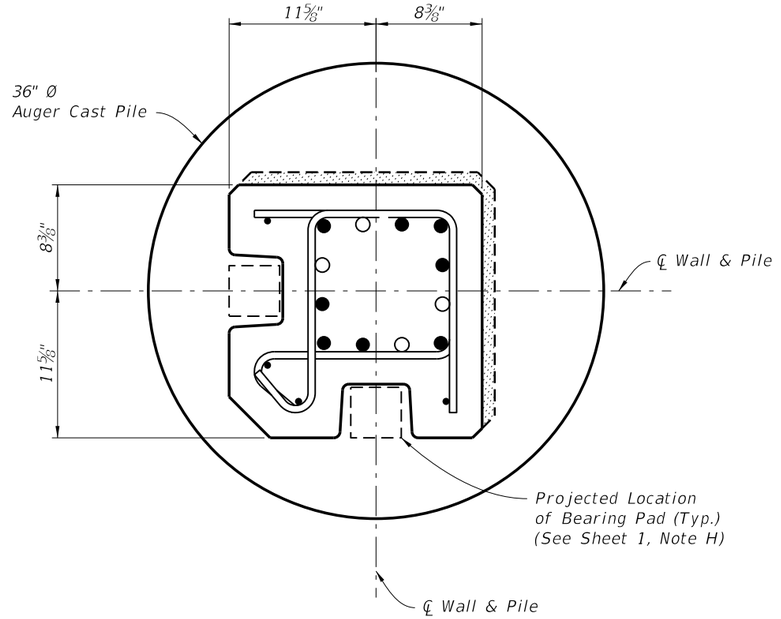

SECTION V-V

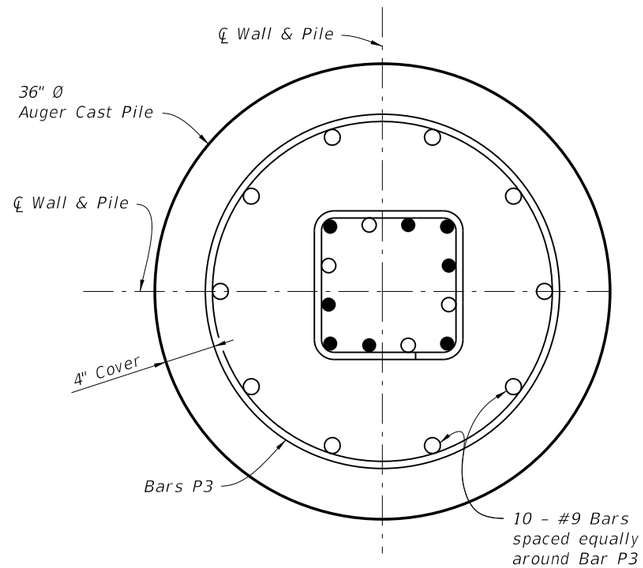

SECTION W-W

NOTES:
1. For Pile Lengths, see Sheets 15 and 16.

2. Trowel Finish top of Pile to allow placement of Bearing Pads.

* Extend Post 2" above top of high side wall panel when post caps are shown in plans. See Sheet 4, "ELEVATION STEP AT TOP OF WALL".

90° CORNER LOW CLEARANCE POST PLACEMENT & PILE REINFORCING STEEL DETAILS

LAST REVISION	REVISION	DESCRIPTION:		FDOT DESIGN STANDARDS 2013	PRECAST SOUND BARRIERS	INDEX NO.	SHEET NO.
07/01/12						5200	13

6/28/2012 2:13:17 PM rd960rh C:\d\projects\standards\structures\2013book\05200-13of16.dgn

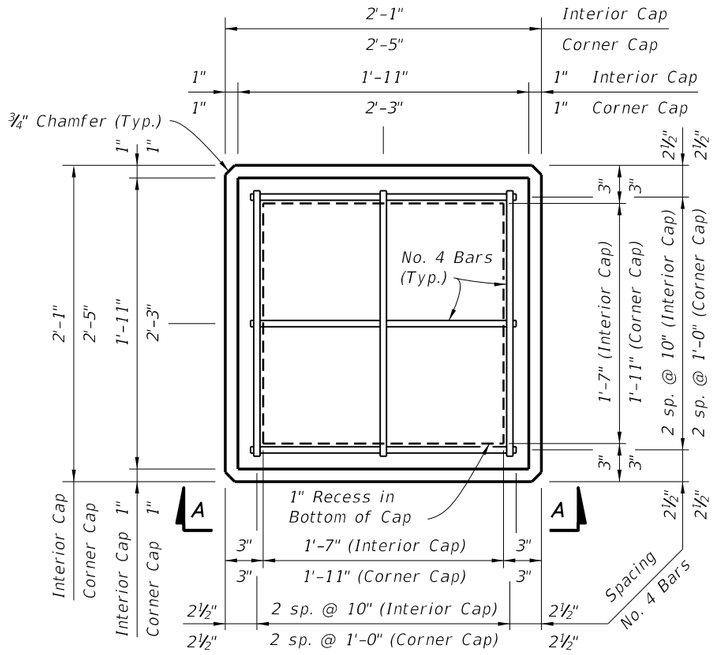

PLAN VIEW
(Type "A" Cap Shown, Type "B" & "C" Caps Similar)

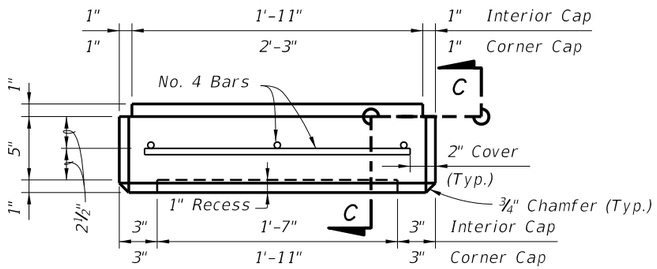

VIEW A-A SHOWN, VIEW B-B SIMILAR
(Type "A" Cap Shown, Type "B" & "C" Caps Similar)

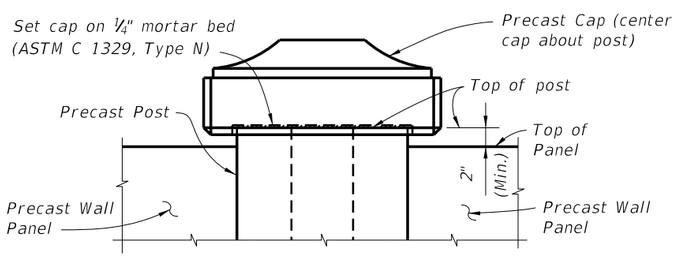

CAP PLACEMENT DETAIL
(Type "B" Cap Shown, Type "A" & "C" Caps Similar)

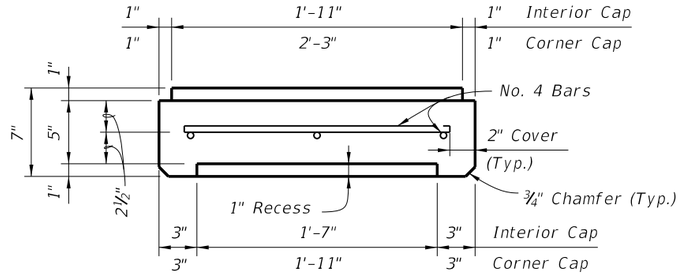

SECTION C-C

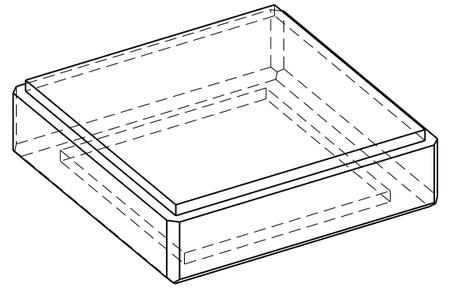

PICTORIAL VIEW

TYPE "A" CAP DETAILS

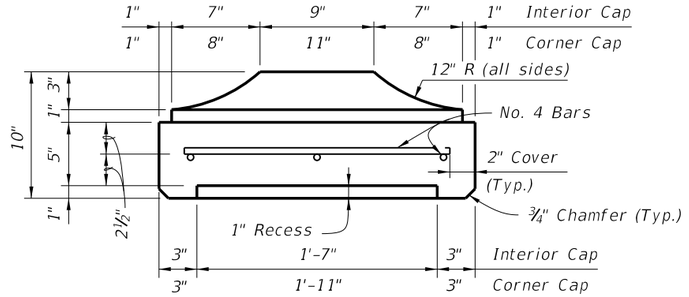

SECTION C-C

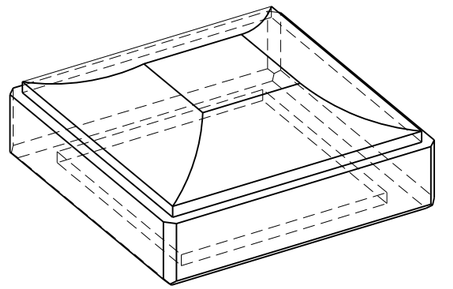

PICTORIAL VIEW

TYPE "B" CAP DETAILS

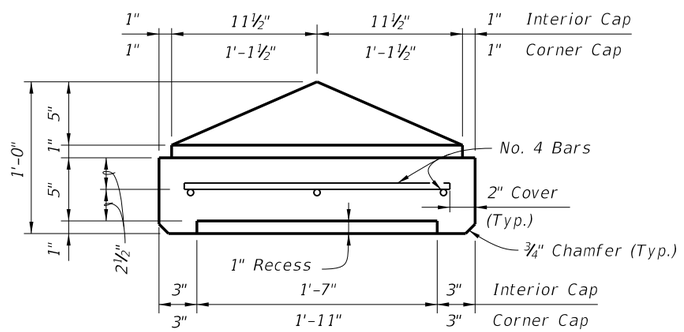

SECTION C-C

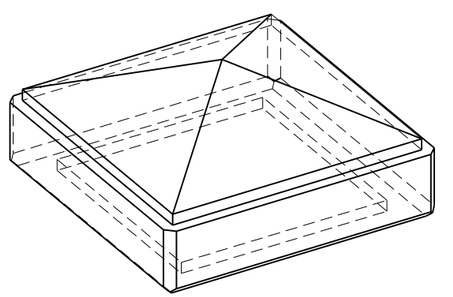

PICTORIAL VIEW

TYPE "C" CAP DETAILS

PRECAST POST CAPITAL

LAST REVISION	REVISION	DESCRIPTION:		FDOT DESIGN STANDARDS 2013	PRECAST SOUND BARRIERS	INDEX NO.	SHEET NO.
01/01/11						5200	14

C:\d\projects\standards\structures\2013book\05200-14of16.dgn rd960rh 2:13:19 PM 6/28/2012

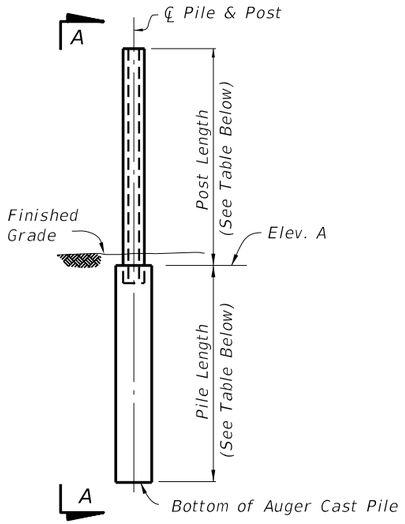

PILE/POST ELEVATION

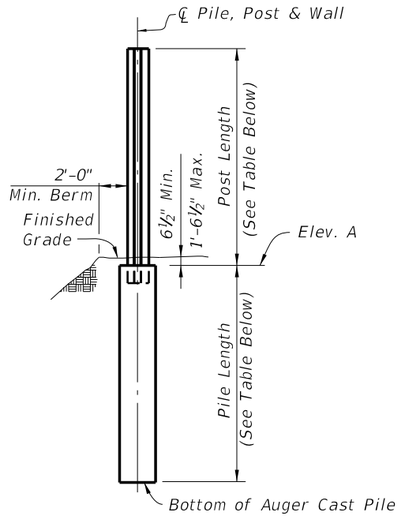

VIEW A-A

BAR BENDING DETAILS

All bar dimensions in bending diagrams are out-to-out. All bars not shown in the bending diagrams are straight.

STANDARD POST (#4 Bars)

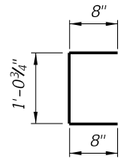

BAR P1
Bar Length = 2'-5"

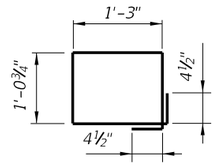

BAR P2
Bar Length = 5'-5"

PILE (Low Clearance) (#4 Bars)

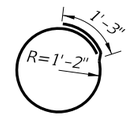

BAR P3
Bar Length = 8'-7"

90° CORNER POST (#4 Bars)

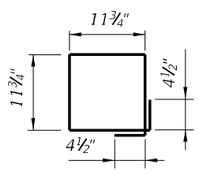

BAR P4
Bar Length = 4'-8"

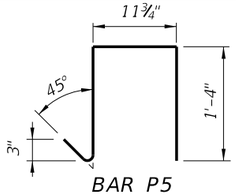

BAR P5
Bar Length = 4'-0"

CAST-IN-PLACE COLLAR (#5 Bars)

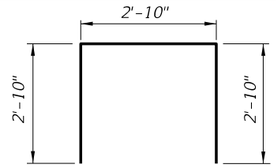

BAR P6
(Pairs)

45° CORNER POST (#4 Bars)

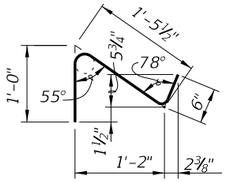

BAR P7
Bar Length = 3'-0"

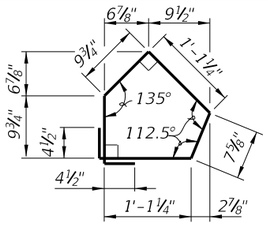

BAR P8
Bar Length = 5'-3"

TABLE 1 - WIND SPEED = 110 MPH

POST AND PILE DIMENSIONS										TABLE OF REINFORCING STEEL												
WALL TYPE	POST LENGTH WITHOUT CAP	POST LENGTH WITH CAP	PILE LENGTH								POST REINFORCING											
			N = 10 to 40 Med. Dense Granular Soil				N = 4 to 9 Loose Granular Soil				10'-0" POST SPACING						20'-0" POST SPACING					
			10'-0" POST SPACING		20'-0" POST SPACING		10'-0" POST SPACING		20'-0" POST SPACING		BARS A	BARS B		BARS D	BARS E		BARS A	BARS B		BARS D	BARS E	
			30" ∅	36" ∅	30" ∅	36" ∅	30" ∅	36" ∅	30" ∅	36" ∅	SIZE	SIZE	DIM 'A'	SIZE	SIZE	DIM 'A'	SIZE	SIZE	DIM 'A'	SIZE	SIZE	DIM 'A'
A1	12'-0½"	12'-2½"	10	10	14	13	11	10	14	13	#4	#4	11'-5"	#4	#4	11'-5"	#4	#4	8'-5"	#5	#5	9'-2"
B1	13'-0½"	13'-2½"	11	10	14	13	11	10	15	14	#4	#4	12'-5"	#4	#4	11'-5"	#5	#5	11'-2"	#5	#5	9'-2"
C1	14'-0½"	14'-2½"	11	10	15	14	12	11	15	14	#4	#4	13'-5"	#4	#4	11'-5"	#5	#5	11'-2"	#6	#6	10'-9"
D1	15'-0½"	15'-2½"	12	11	16	14	12	11	16	15	#4	#4	13'-5"	#4	#4	11'-5"	#5	#5	11'-2"	#6	#6	10'-9"
E1	16'-0½"	16'-2½"	12	11	16	15	13	12	17	15	#4	#4	13'-5"	#5	#5	14'-2"	#6	#6	12'-9"	#7	#7	12'-4"
F1	17'-0½"	17'-2½"	13	12	17	15	13	12	17	16	#4	#4	13'-5"	#5	#5	14'-2"	#6	#6	12'-9"	#7	#7	12'-4"
G1	18'-0½"	18'-2½"	13	12	17	16	13	13	18	17	#5	#5	16'-2"	#5	#5	14'-2"	#6	#6	12'-9"	#8	#8	13'-10"
H1	19'-0½"	19'-2½"	13	13	18	17	14	13	18	17	#5	#5	16'-2"	#6	#6	15'-9"	#7	#7	14'-4"	#8	#8	13'-10"
I1	20'-0½"	20'-2½"	14	13	18	17	14	13	19	18	#5	#5	16'-2"	#6	#6	15'-9"	#7	#7	14'-4"	#8	#8	13'-10"
J1	21'-0½"	21'-2½"	14	13	19	17	15	14	19	18	#5	#5	16'-2"	#6	#6	15'-9"	#7	#7	14'-4"	#9	#9	15'-4"
K1	22'-0½"	22'-2½"	15	14	19	18	15	14	20	19	#6	#6	18'-9"	#7	#7	18'-4"	#8	#8	15'-10"	#9	#9	15'-4"

TABLE NOTE:

1. Bars D and Bars E are for 45° Corner Posts only.

PILE DEPTH & REINFORCING SUMMARY

C:\d\projects\standards\structures\2013book\05200-15of16.dgn rd960rh 2:13:21 PM 6/28/2012

TABLE 2 - WIND SPEED = 130 MPH

POST AND PILE DIMENSIONS										TABLE OF REINFORCING STEEL											
WALL TYPE	POST LENGTH WITHOUT CAP	POST LENGTH WITH CAP	PILE LENGTH								POST REINFORCING											
			N = 10 to 40 Med. Dense Granular Soil				N = 4 to 9 Loose Granular Soil				10'-0" POST SPACING						20'-0" POST SPACING					
			10'-0" POST SPACING		20'-0" POST SPACING		10'-0" POST SPACING		20'-0" POST SPACING		BARS A	BARS B		BARS D	BARS E		BARS A	BARS B		BARS D	BARS E	
			30" ∅	36" ∅	30" ∅	36" ∅	30" ∅	36" ∅	30" ∅	36" ∅	SIZE	SIZE	DIM 'A'	SIZE	SIZE	DIM 'A'	SIZE	SIZE	DIM 'A'	SIZE	SIZE	DIM 'A'
A2	12'-0½"	12'-2½"	12	11	16	15	12	11	16	15	#4	#4	11'-5"	#4	#4	9'-5"	#5	#5	9'-2"	#6	#6	8'-9"
B2	13'-0½"	13'-2½"	12	12	16	15	13	12	17	16	#4	#4	11'-5"	#5	#5	12'-2"	#5	#5	9'-2"	#6	#6	8'-9"
C2	14'-0½"	14'-2½"	13	12	17	16	13	12	18	16	#4	#4	11'-5"	#5	#5	12'-2"	#6	#6	10'-9"	#7	#7	10'-4"
D2	15'-0½"	15'-2½"	13	13	18	16	14	13	18	17	#4	#4	11'-5"	#5	#5	12'-2"	#6	#6	10'-9"	#7	#7	10'-4"
E2	16'-0½"	16'-2½"	14	13	19	17	14	13	19	18	#5	#5	13'-2"	#6	#6	13'-9"	#7	#7	12'-4"	#8	#8	11'-10"
F2	17'-0½"	17'-2½"	14	13	19	18	15	14	20	18	#5	#5	13'-2"	#6	#6	13'-9"	#7	#7	12'-4"	#8	#8	11'-10"
G2	18'-0½"	18'-2½"	15	14	20	18	15	14	20	19	#5	#5	13'-2"	#6	#6	13'-9"	#8	#8	13'-10"	#9	#9	12'-4"
H2	19'-0½"	19'-2½"	15	14	20	19	16	15	21	20	#6	#6	15'-9"	#7	#7	15'-4"	#8	#8	13'-10"	#9	#10	11'-7"
I2	20'-0½"	20'-2½"	16	15	21	19	16	15	22	20	#6	#6	15'-9"	#7	#7	15'-4"	#8	#8	12'-10"	#10	#10	13'-7"
J2	21'-0½"	21'-2½"	16	15	22	20	17	16	22	21	#6	#6	15'-9"	#7	#7	15'-4"	#9	#9	14'-4"	#10	#11	12'-10"
K2	22'-0½"	22'-2½"	17	16	22	21	17	16	23	21	#7	#7	17'-4"	#8	#8	16'-10"	#9	#9	14'-4"	#11	#11	13'-10"

TABLE 3 - WIND SPEED = 150 MPH

POST AND PILE DIMENSIONS										TABLE OF REINFORCING STEEL											
WALL TYPE	POST LENGTH WITHOUT CAP	POST LENGTH WITH CAP	PILE LENGTH								POST REINFORCING											
			N = 10 to 40 Med. Dense Granular Soil				N = 4 to 9 Loose Granular Soil				10'-0" POST SPACING						20'-0" POST SPACING					
			10'-0" POST SPACING		20'-0" POST SPACING		10'-0" POST SPACING		20'-0" POST SPACING		BARS A	BARS B		BARS D	BARS E		BARS A	BARS B		BARS D	BARS E	
			30" ○	36" ○	30" ○	36" ○	30" ○	36" ○	30" ○	36" ○	SIZE	SIZE	DIM 'A'	SIZE	SIZE	DIM 'A'	SIZE	SIZE	DIM 'A'	SIZE	SIZE	DIM 'A'
A3	12'-0½"	12'-2½"	13	12	18	16	14	13	18	17	#4	#4	9'-5"	#5	#5	10'-2"	#6	#6	8'-9"	#6	#7	7'-4"
B3	13'-0½"	13'-2½"	14	13	19	17	14	13	19	18	#4	#4	9'-5"	#5	#5	10'-2"	#6	#6	8'-9"	#7	#7	8'-4"
C3	14'-0½"	14'-2½"	14	13	19	18	15	14	20	19	#5	#5	11'-2"	#6	#6	11'-9"	#7	#7	10'-4"	#8	#8	9'-10"
D3	15'-0½"	15'-2½"	15	14	20	19	16	14	21	19	#5	#5	11'-2"	#6	#6	11'-9"	#7	#7	10'-4"	#8	#9	9'-4"
E3	16'-0½"	16'-2½"	16	14	21	19	16	15	22	20	#5	#5	11'-2"	#6	#6	11'-9"	#8	#8	10'-10"	#9	#9	10'-4"
F3	17'-0½"	17'-2½"	16	15	22	20	17	16	22	21	#6	#6	13'-9"	#7	#7	13'-4"	#8	#8	10'-10"	#9	#10	9'-7"
G3	18'-0½"	18'-2½"	17	16	22	21	17	16	23	21	#6	#6	12'-9"	#7	#7	13'-4"	#9	#9	12'-4"	#10	#10	11'-7"
H3	19'-0½"	19'-2½"	17	16	23	21	18	17	24	22	#6	#6	12'-9"	#8	#8	14'-10"	#9	#9	12'-4"	#11	#11	11'-9"
I3	20'-0½"	20'-2½"	18	17	24	22	18	17	25	23	#7	#7	15'-4"	#8	#8	14'-10"	#9	#10	11'-7"	#11	#14	10'-0"
J3	21'-0½"	21'-2½"	18	17	24	23	19	18	25	23	#7	#7	15'-4"	#9	#9	16'-4"	–	–	–	–	–	–
K3	22'-0½"	22'-2½"	19	17	25	23	19	18	26	24	#8	#8	16'-10"	#9	#9	16'-4"	–	–	–	–	–	–

TABLE NOTE:

1. Bars D and Bars E are for 45° Corner Posts only.

PILE DEPTH & REINFORCING SUMMARY

6/28/2012 2:13:23 PM rd960rh C:\d\projects\standards\structures\2013book\05200-16of16.dgn

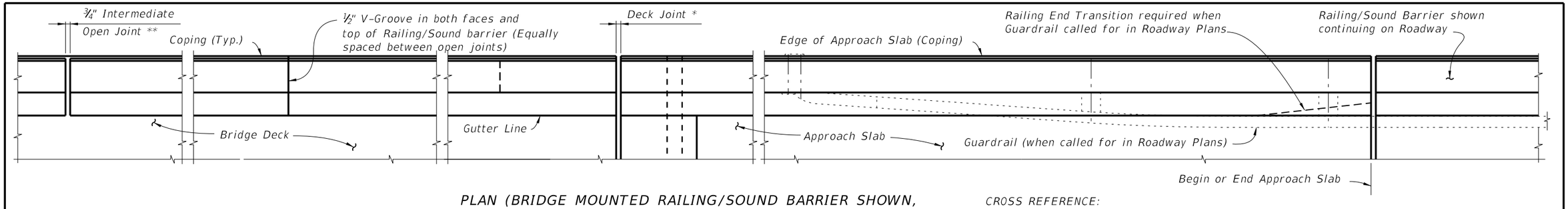

PLAN (BRIDGE MOUNTED RAILING/SOUND BARRIER SHOWN, WALL OR FOOTING MOUNTED RAILING/SOUND BARRIER SIMILAR) (Reinforcing Steel not shown for clarity)

CROSS REFERENCE:
For Detail "B" and V-Groove Lettering Detail see Sheet 2.
For Section A-A see Sheet 4.
For Section C-C and Detail "A" see Sheet 5.
For Wall mounted Railing/Sound Barrier Details see Index No. 5212.
For Footing mounted Railing/Sound Barrier Details see Index Nos. 5213 (T-Shaped), 5214 (L-Shaped) or 5215 (Trench).

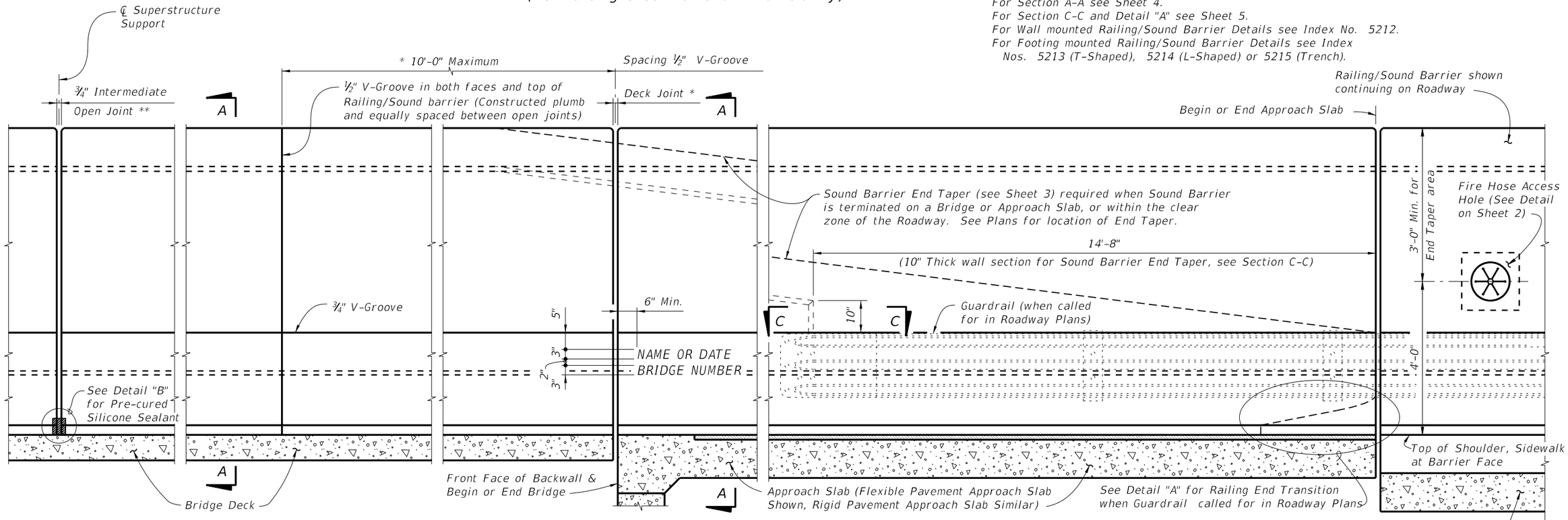

ELEVATION OF INSIDE FACE OF RAILING/SOUND BARRIER (BRIDGE MOUNTED RAILING/SOUND BARRIER SHOWN, WALL OR FOOTING MOUNTED RAILING/SOUND BARRIER SIMILAR) (Reinforcing Steel not shown for clarity)

** On Bridges see Superstructure and Approach Slab Sheets for actual dimensions and joint orientation. Open Railing/Sound Barrier Joints at Deck Expansion Joint locations shall match the dimensions of the Deck Joint. For treatment of Railing/Sound Barrier walls on skewed bridges see Index No. 420. Deck Joint at Begin Bridge or End Bridge shown, Deck Joint at ℄ Pier or Intermediate Bent, Junction Slab or Footing similar.*

*** ¾" Intermediate Open Joints shall be constructed plumb and provided at :*
(1) – Superstructure supports where slab is continuous.
(2) – Construction Joints for Junction Slabs and Footings.

C:\d_projects\standards\structures\2013book\05210-1of5.dgn rd960rh 2:13:26 PM 6/28/2012

LAST REVISION	REVISION	DESCRIPTION:			INDEX NO.	SHEET NO.
01/01/11			FDOT DESIGN STANDARDS 2013	TRAFFIC RAILING/SOUND BARRIER (8'-0")	5210	1

TRAFFIC RAILING/SOUND BARRIER NOTES

This railing has been structurally evaluated to be equivalent or greater in strength to a safety shape/sound barrier combination railing which has been crash tested to NCHRP Report 350 TL-4 Criteria. The Transverse Design Force for the design of bridge deck overhang shall be 54 kips applied horizontally at 3'-6" height above the deck.

CONSTRUCTION REQUIREMENTS : The Traffic Railing/Sound Barrier and joints shall be constructed plumb, they shall not be constructed perpendicular to the roadway surface. Slip forming is not permitted.

CONCRETE AND REINFORCING STEEL : For Railing/Sound Barrier on bridges see General Notes. For Wall and Footing mounted Railing/Sound Barrier, concrete shall be Class II for slightly aggressive environments and Class IV for moderately or extremely aggressive environments. All reinforcing steel shall be Grade 60.

NAME, DATE AND BRIDGE NUMBER : For Railing/Sound Barrier on bridges, the Name and Bridge Number shall be placed on the Traffic Railing so as to be seen on the driver's right side when approaching the bridge. The Date shall be placed on the driver's left side when approaching the bridge. The Name shall be as shown in the General Notes in the Structures Plans. The Date shall be the year the bridge is completed. For a widening when the existing railing is removed, use both the existing date and the year of the widening. Black plastic letters and figures 3" in height may be used, as approved by the Engineer, in lieu of the letters and figures formed by 3/8" V-Grooves. V-Grooves shall be formed by preformed letters and figures.

MARKERS : For Railing/Sound Barrier on bridges, Elevation Markers shall be placed on top of the Traffic Railing/Sound Barrier or Bridge Deck at the end bents as directed by the Engineer. Markers are to be furnished by the Florida Department of Transportation and installed by the Contractor. The cost of installing the markers shall be included in the Contract Unit Price for the Railing/Sound Barrier.

REFLECTIVE RAILING MARKERS : Reflective Railing Markers shall meet Specification Section 993. Install markers 2'-4" above the riding surface at the spacing shown in the table below. Reflector color (white or yellow) shall match the color of the near edgeline. The cost of the reflective markers shall be included in the Contract Unit Price for the Traffic Railing/Sound Barrier.

REFLECTIVE RAILING MARKER SPACING	
Distance – Edge of Travel Lane to Face of Railing	Spacing (Ft.)
< 4'	40'
4' to 8'	80'
> than 8'	None Required

INTERMEDIATE JOINT SEAL NOTES:

1. *At Intermediate Open Joints, seal the lower 6" portion of the open joint with Pre-cured Silicone Sealant in accordance with Specification Section 932.*
2. *Apply sealant prior to any Class V finish coating and remove all curing compound and loose material from the surface prior to application of bonding agent.*
3. *The cost of the Pre-cured Silicone Sealant shall be included in the Contract Unit Price for the Traffic Railing.*

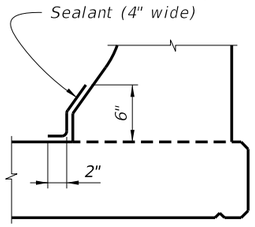

DETAIL "B" - SECTION AT INTERMEDIATE OPEN JOINT

ESTIMATED TRAFFIC RAILING/SOUND BARRIER QUANTITIES		
ITEM	UNIT	QUANTITY
Concrete (Railing)	CY/LF	0.104
Concrete (Sound Barrier)	CY/LF	0.145
Reinforcing Steel (Typical)	LB/LF	78.57
Additional Reinf. @ Open Joint	LB	430.24

(The above quantities are based on the bridge mounted typical section, 2% deck cross slope and railing on low side of deck.)

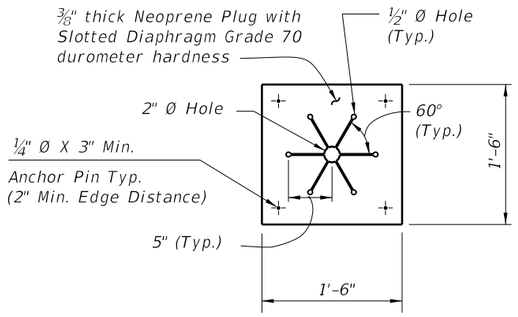

NEOPRENE DIAPHRAGM PLUG DETAIL

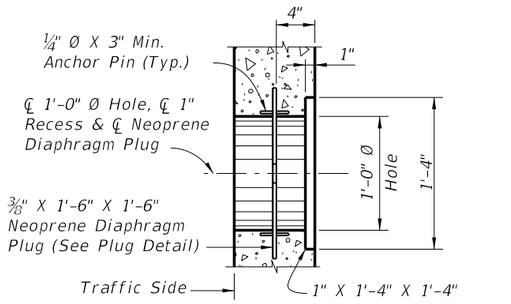

TYPICAL SECTION FIRE HOSE ACCESS DETAIL

NOTE:
Fire hose access holes are required at or near fire hydrant locations. Field cut reinforcement as required to maintain 2" minimum cover at access holes. Locate fire hose access holes a minimum of 10'-0" from 3/4" open joints when possible.

REINFORCING STEEL BENDING DIAGRAMS

BILL OF REINFORCING STEEL		
MARK	SIZE	LENGTH
P	5	5'-7"
R	5	7'-9"
S1	5	As Reqd.
S2	5	7'-3"
V (Bridge and Wall)	5	5'-1"
V (Footing)	5	7'-7"

BRIDGE CROSS-SLOPE		LOW GUTTER		HIGH GUTTER	
		ØA	ØB	ØA	ØB
BRIDGE MOUNTED	0% to 2%	90°	90°	90°	90°
	2% to 6%	93°	87°	87°	93°
	6% to 10%	96°	84°	84°	96°
WALL & FOOTING MOUNTED		90°	90°	90°	90°

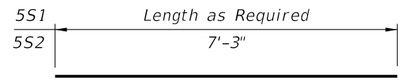

BARS 5S1 & 5S2

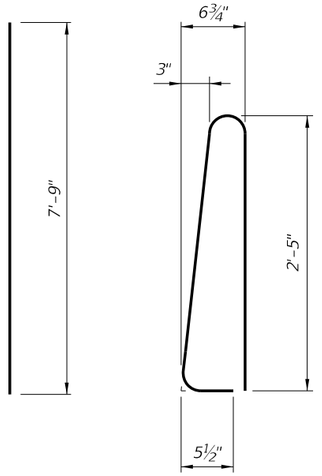

BAR 5R (Field Cut for End Taper)

STIRRUP BAR 5P

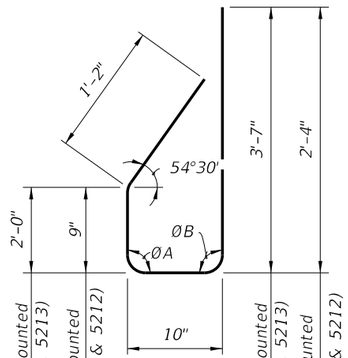

STIRRUP BAR 5V

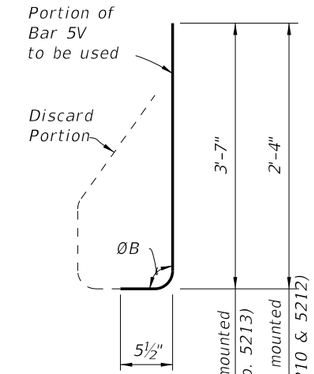

END STIRRUP BAR 5V To Be Field Cut (One Required per Railing End Transition)

Footing mounted (Index No. 5213)
Bridge & Wall mounted (Index Nos. 5210 & 5212)

REINFORCING STEEL NOTES:

1. *All bar dimensions in the bending diagrams are out to out.*
2. *All reinforcing steel at the open joints shall have a 2" minimum cover.*
3. *Bars 5S1 may be continuous or spliced at the construction joints. Lap splices for Bars 5S1 shall be a minimum of 2'-2".*
4. *The Contractor may use Welded Wire Reinforcement when approved by the Engineer. Welded Wire Reinforcement shall conform to ASTM A 497.*
5. *Bars 5R shall be one continuous bar. No mechanical couplers or lap splices are permitted.*
6. *See Index Nos. 5214 and 5215 for Bars 5V and 5T in L-shaped and Trench footings.*

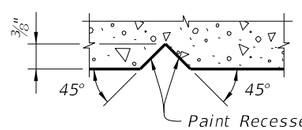

SECTION THRU RECESSED "V" GROOVE TO FORM INSCRIBED LETTERS AND FIGURES

CROSS REFERENCE:
For locations of Detail "B", see Sheet 1.

6/28/2012 2:13:28 PM rd960rh C:\d\projects\standards\structures\2013book\05210-2of5.dgn

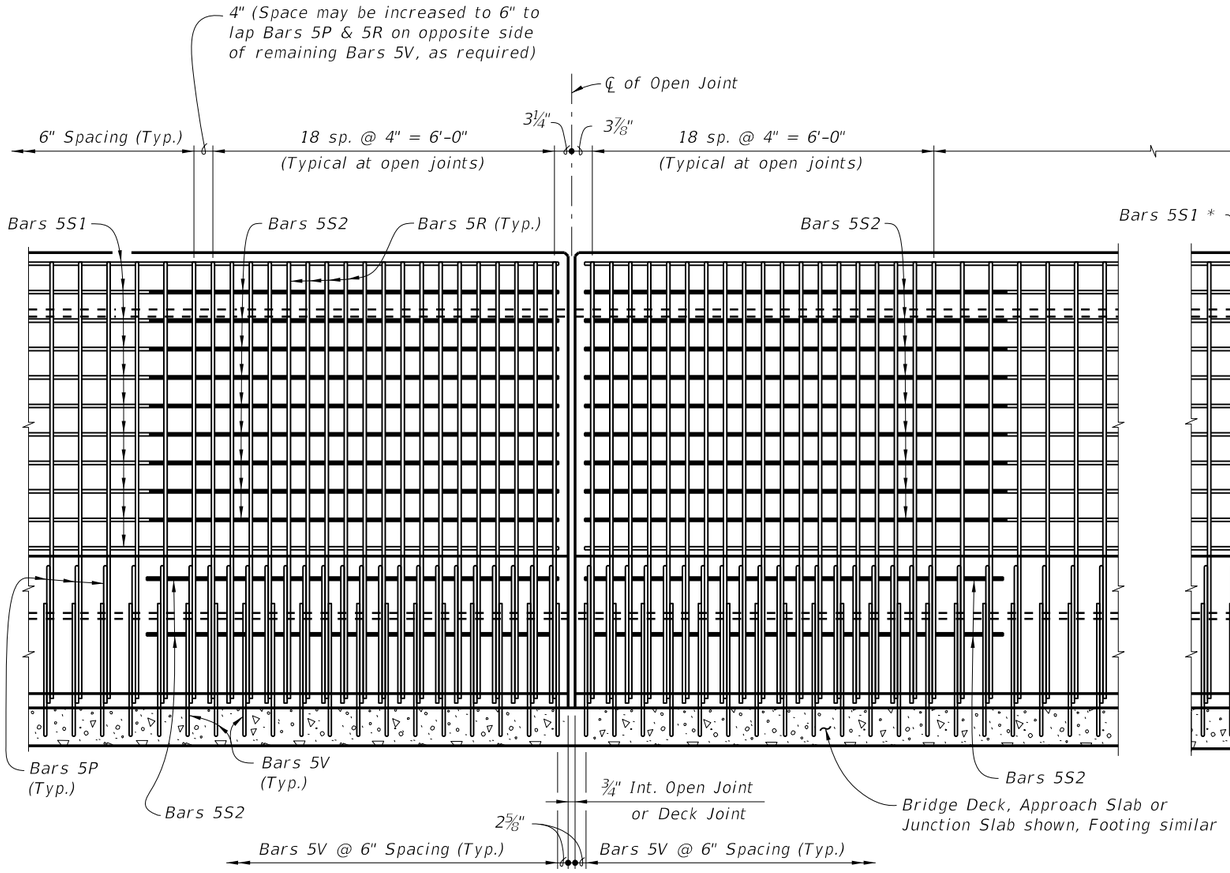

ELEVATION OF RAILING/SOUND BARRIER REINFORCING STEEL
(INTERMEDIATE OPEN JOINT SHOWN, DECK JOINT SIMILAR)
(Bars 5S1 in Barrier not shown for clarity)

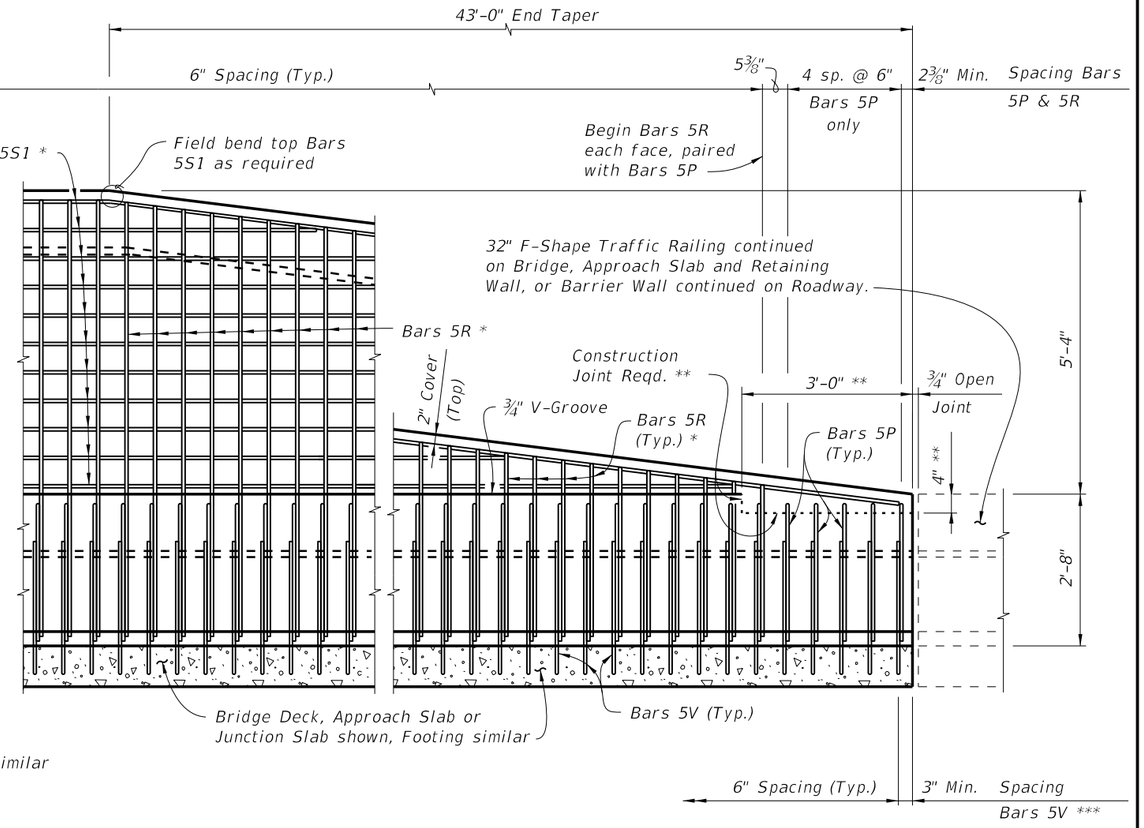

ELEVATION OF RAILING/SOUND BARRIER END TAPER (ADJACENT TO TRAFFIC RAILING SHOWN, GUARDRAIL ATTACHMENT SIMILAR SEE DETAIL "A", SHEET 5)
(Bars 5S1 in Railing not shown for clarity)

NOTES:
* Field Cut Bars 5R & 5S1 to maintain clearance.
** Terminate ¾" V-groove at construction joint & cast top of railing with End Taper.
*** Bar spacing shown for Bars 5V applies only to bridge mounted Railing/Sound Barrier. See Index No. 5212 for spacing of Bars 5V in junction slabs and Index Nos. 5213 (T-Shaped), 5214 (L-Shaped) or 5215 (Trench) for Bars 5V spacing in footings.

C:\d*projects\standards\structures\2013book\05210-3of5.dgn rd960rh 2:13:31 PM 6/28/2012

LAST REVISION	REVISION	DESCRIPTION:		FDOT DESIGN STANDARDS 2013	TRAFFIC RAILING/SOUND BARRIER (8'-0")	INDEX NO.	SHEET NO.
07/01/07						5210	3

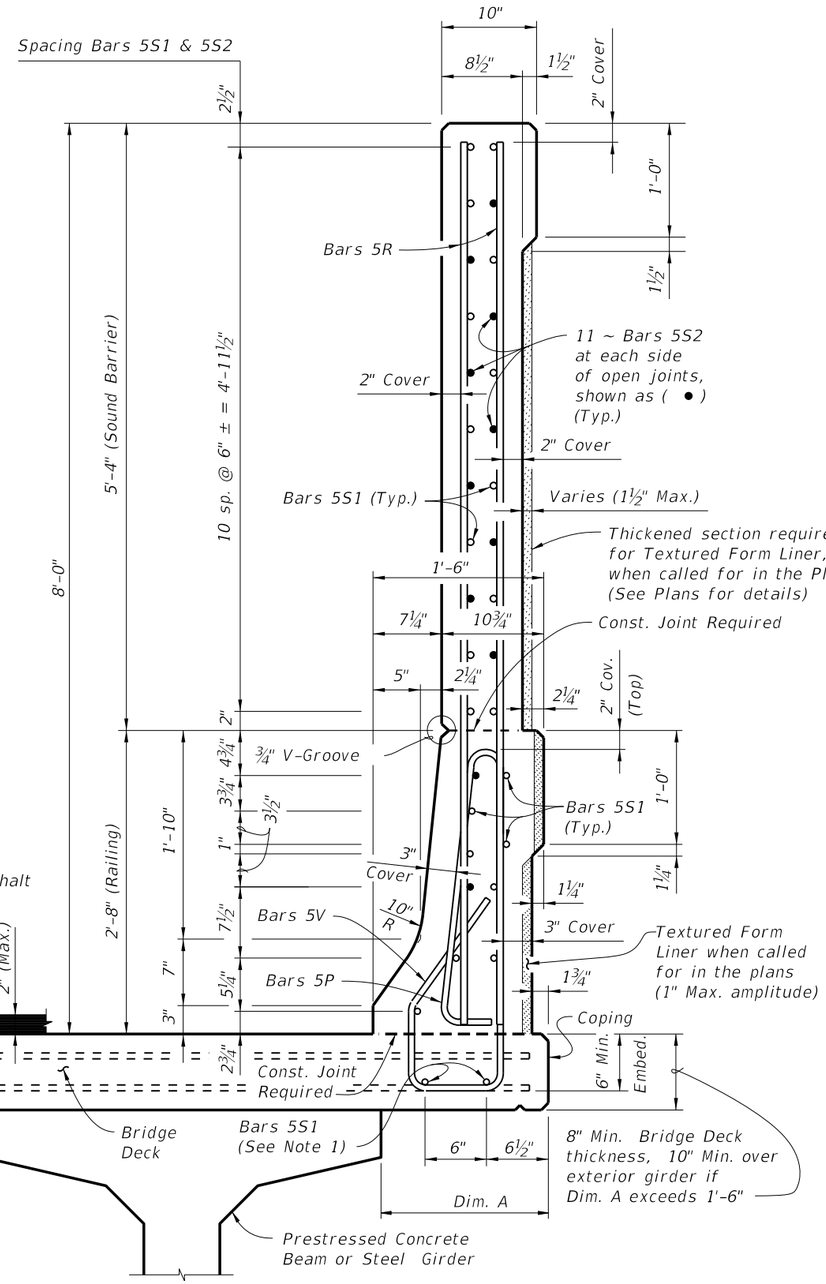

SECTION A-A
TYPICAL SECTION THRU TRAFFIC RAILING/SOUND BARRIER
(Section Thru Bridge Deck Shown, Section Thru Approach Slab, Junction Slab or Footing Similar)

NOTES:
1. Bottom Bars 5S1 and End Bar 5V are not present in L-Shaped (Index No. 5214) or Trench (Index No. 5215) Footings. For Bridge Mounted installations, see the Superstructure Sheets for Deck Steel. Omit Bars 5S1 if not specifically shown on the Superstructure Sheets.

CROSS REFERENCE:
For locations of Section A-A see Sheet 1.
For location of View B-B, see Sheet 5.

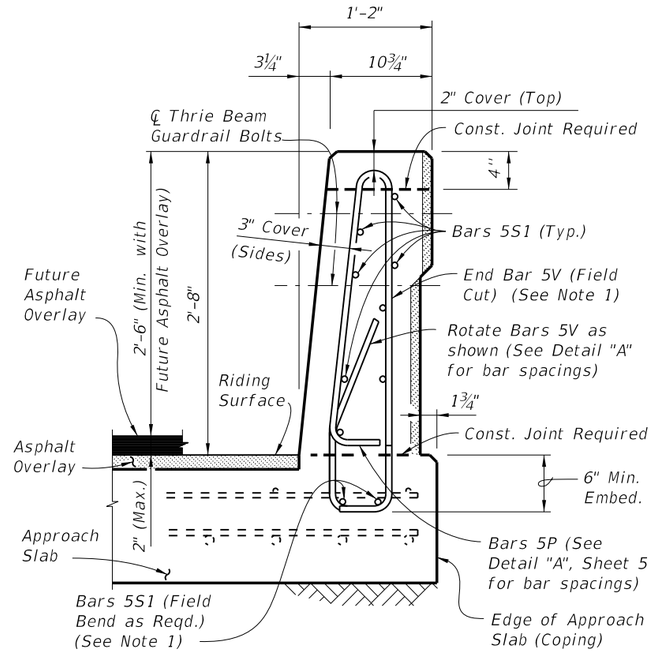

VIEW B-B
END VIEW OF RAILILNG END TRANSITION FOR GUARDRAIL ATTACHMENT AT END OF APPROACH SLAB
(Flexible Pavement Approach Slab Shown, Rigid Pavement Approach Slab, Junction Slab or Footing Similar)

C:\d\projects\standards\structures\2013book\05210-4of5.dgn
rd960rh
2:13:34 PM
6/28/2012

LAST REVISION	REVISION	DESCRIPTION:			INDEX NO.	SHEET NO.
01/01/11			FDOT DESIGN STANDARDS 2013	TRAFFIC RAILING/SOUND BARRIER (8'-0")	5210	4

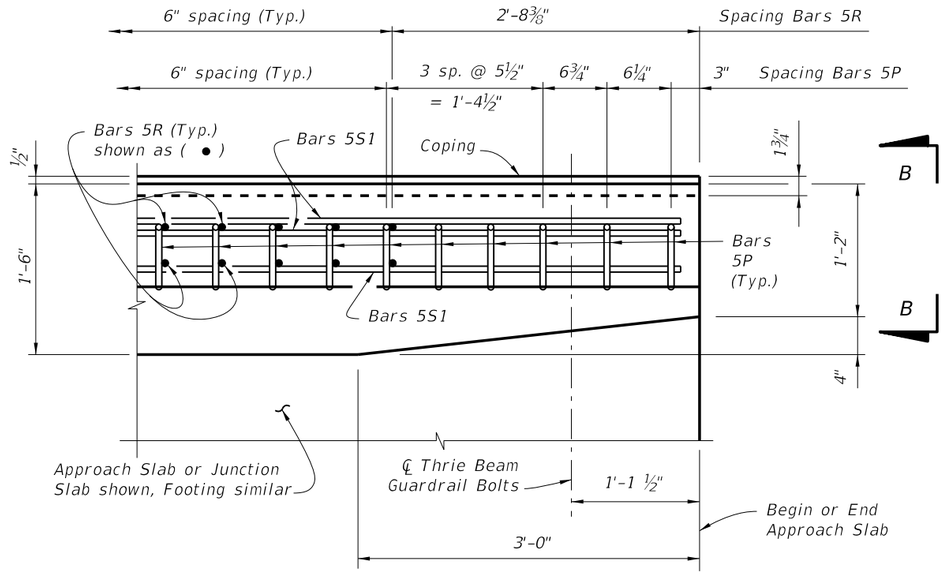

PLAN - RAILING END TRANSITION
(Showing Bars 5P, 5R, and Bars 5S1) (Bars 5V,
Soundwall & Reinforcement not shown for Clarity)

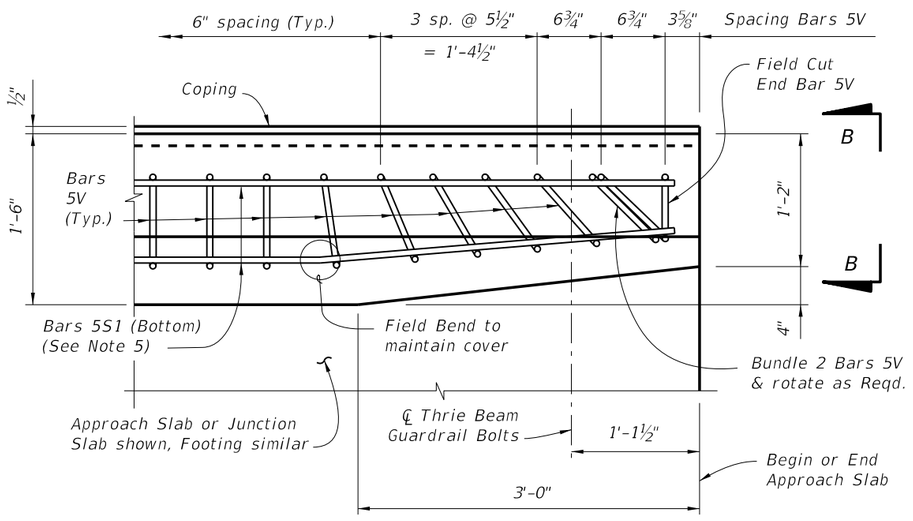

PLAN - RAILING END TRANSITION
(Showing Bars 5V and Bars 5S1) (Bars 5P, 5R,
Soundwall & Reinforcement not shown for Clarity)

DETAIL "A"

DETAIL "A" NOTES:

1. *Rotate Bars 5P & 5V in Railing End Transition to maintain cover. Begin placing Railing Bars 5P and 5V at the railing end and proceed toward the guardrail (thrie beam) terminal connector to ensure placement of guardrail bolt holes. Pair Bars 5R with Bars 5P as shown. Clearance of Bars 5P, 5R & 5V to guardrail bolt holes shall be checked to prevent cutting of bars if holes are to be drilled. Shift bars locally where conflicts occur.*
2. *For Guardrail connection details see Design Standards Index No. 400.*
3. *Omit Raililng End Transition if a 32" F-Shape Traffic Railing is used beyond the End Taper. See the Plan Sheets. If Railing End Transition is omitted, space Bars 5P, 5R & 5V at 6" as shown above (Typ.).*
4. *For L-Shaped (Index No. 5214) and Trench (Index No. 5215) footings, Bars 5V and 5T replace Bars 5V as shown at left. Details and bar spacing shown apply except that it is not necessary to rotate Bars 5V and 5T to maintain cover and there is no field cut End Bar 5V.*
5. *Bottom Bars 5S1 are not present in L-Shaped or Trench Footings.*

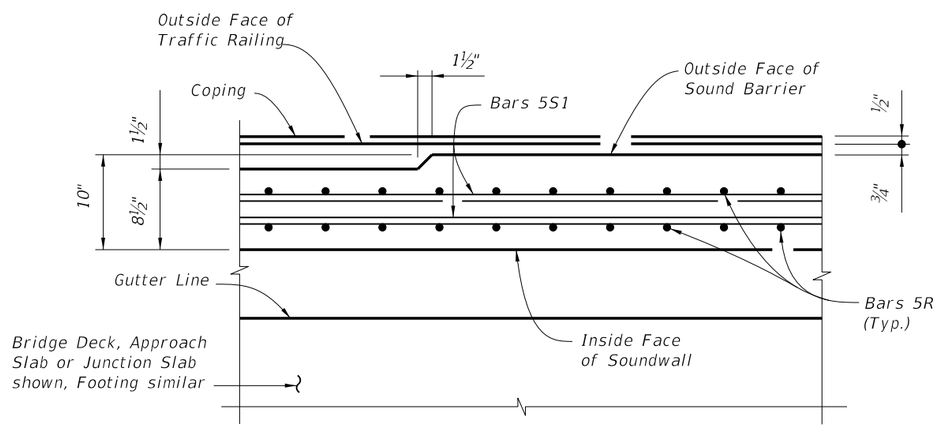

SECTION C-C
THRU SOUNDWALL END TAPER

CROSS REFERENCE:
For location of Detail "A" see Sheet 1.
For location of Section C-C see Sheet 1.
For View B-B see Sheet 4.

C:\d\projects\standards\structures\2013book\05210-5of5.dgn
rd960rh
2:13:36 PM
6/28/2012

LAST REVISION	REVISION	DESCRIPTION:				
07/01/07			FDOT DESIGN STANDARDS 2013	TRAFFIC RAILING/SOUND BARRIER (8'-0")	INDEX NO. 5210	SHEET NO. 5

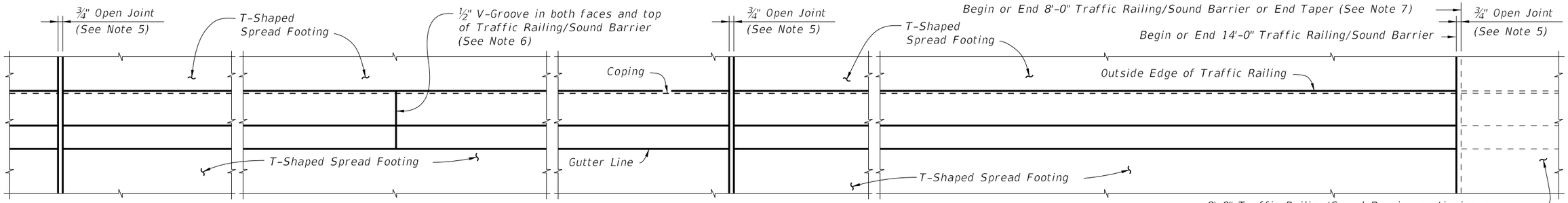

CROSS REFERENCE:
For Section A-A, Detail "A" and Estimated Quantities, see Sheet 3.
For Expansion Joint Detail in Footing, see Index No. 5213, 5214 or 5215.

PLAN (Reinforcing Steel not shown for clarity)
(T-Shaped Spread Footing Shown, L-Shaped Spread Footing and Trench Footing Similar)

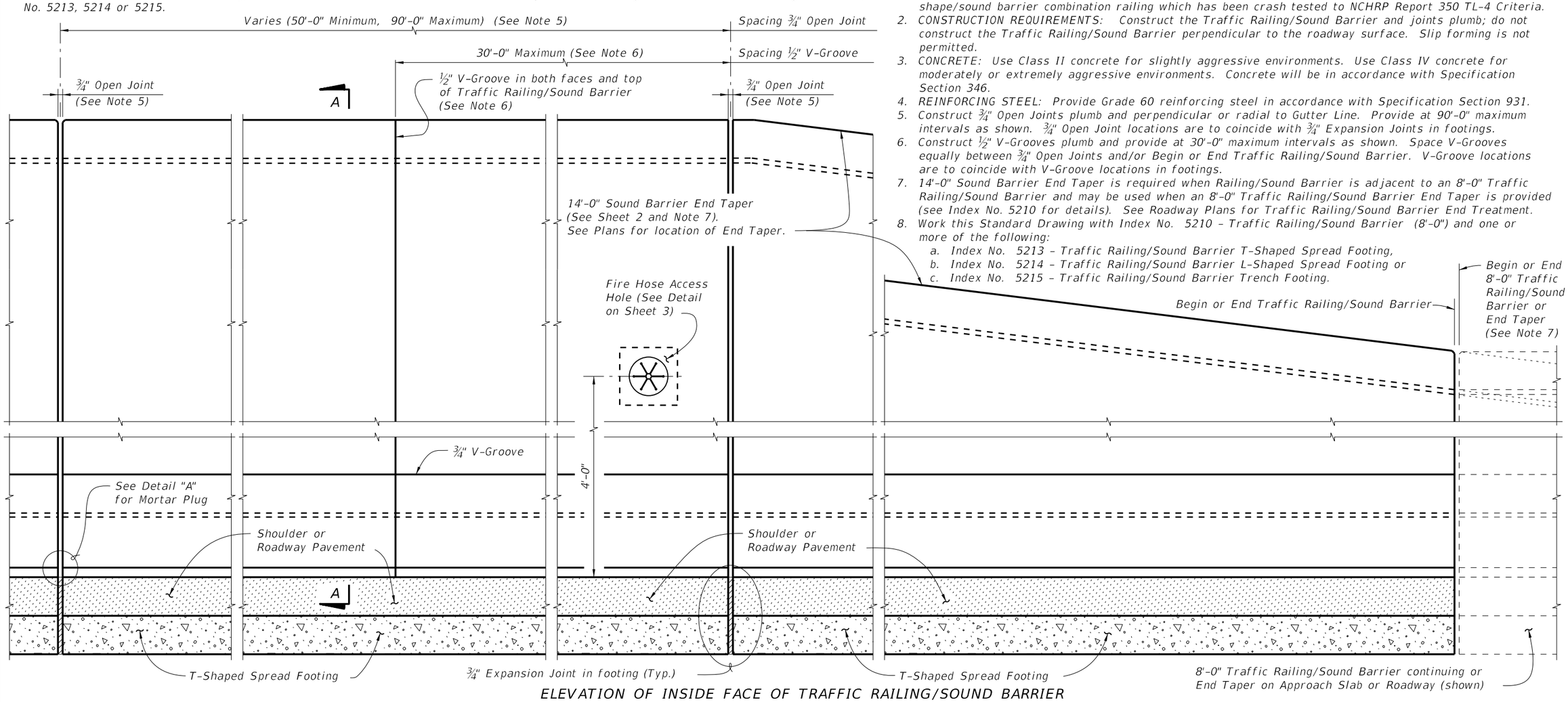

ELEVATION OF INSIDE FACE OF TRAFFIC RAILING/SOUND BARRIER
(Reinforcing Steel not shown for clarity)
(T-Shaped Spread Footing Shown, L-Shaped Spread Footing and Trench Footing Similar)

TRAFFIC RAILING/SOUND BARRIER NOTES

1. This railing has been structurally evaluated to be equivalent or greater in strength to a safety shape/sound barrier combination railing which has been crash tested to NCHRP Report 350 TL-4 Criteria.
2. CONSTRUCTION REQUIREMENTS: Construct the Traffic Railing/Sound Barrier and joints plumb; do not construct the Traffic Railing/Sound Barrier perpendicular to the roadway surface. Slip forming is not permitted.
3. CONCRETE: Use Class II concrete for slightly aggressive environments. Use Class IV concrete for moderately or extremely aggressive environments. Concrete will be in accordance with Specification Section 346.
4. REINFORCING STEEL: Provide Grade 60 reinforcing steel in accordance with Specification Section 931.
5. Construct ¾" Open Joints plumb and perpendicular or radial to Gutter Line. Provide at 90'-0" maximum intervals as shown. ¾" Open Joint locations are to coincide with ¾" Expansion Joints in footings.
6. Construct ½" V-Grooves plumb and provide at 30'-0" maximum intervals as shown. Space V-Grooves equally between ¾" Open Joints and/or Begin or End Traffic Railing/Sound Barrier. V-Groove locations are to coincide with V-Groove locations in footings.
7. 14'-0" Sound Barrier End Taper is required when Railing/Sound Barrier is adjacent to an 8'-0" Traffic Railing/Sound Barrier and may be used when an 8'-0" Traffic Railing/Sound Barrier End Taper is provided (see Index No. 5210 for details). See Roadway Plans for Traffic Railing/Sound Barrier End Treatment.
8. Work this Standard Drawing with Index No. 5210 - Traffic Railing/Sound Barrier (8'-0") and one or more of the following:
   a. Index No. 5213 - Traffic Railing/Sound Barrier T-Shaped Spread Footing,
   b. Index No. 5214 - Traffic Railing/Sound Barrier L-Shaped Spread Footing or
   c. Index No. 5215 - Traffic Railing/Sound Barrier Trench Footing.

C:\d\projects\standards\structures\2013book\05211-1of3.dgn
rd960rh
2:13:41 PM
6/28/2012

LAST REVISION	REVISION	DESCRIPTION:		FDOT DESIGN STANDARDS 2013	TRAFFIC RAILING/SOUND BARRIER (14'-0")	INDEX NO.	SHEET NO.
07/01/07						5211	1

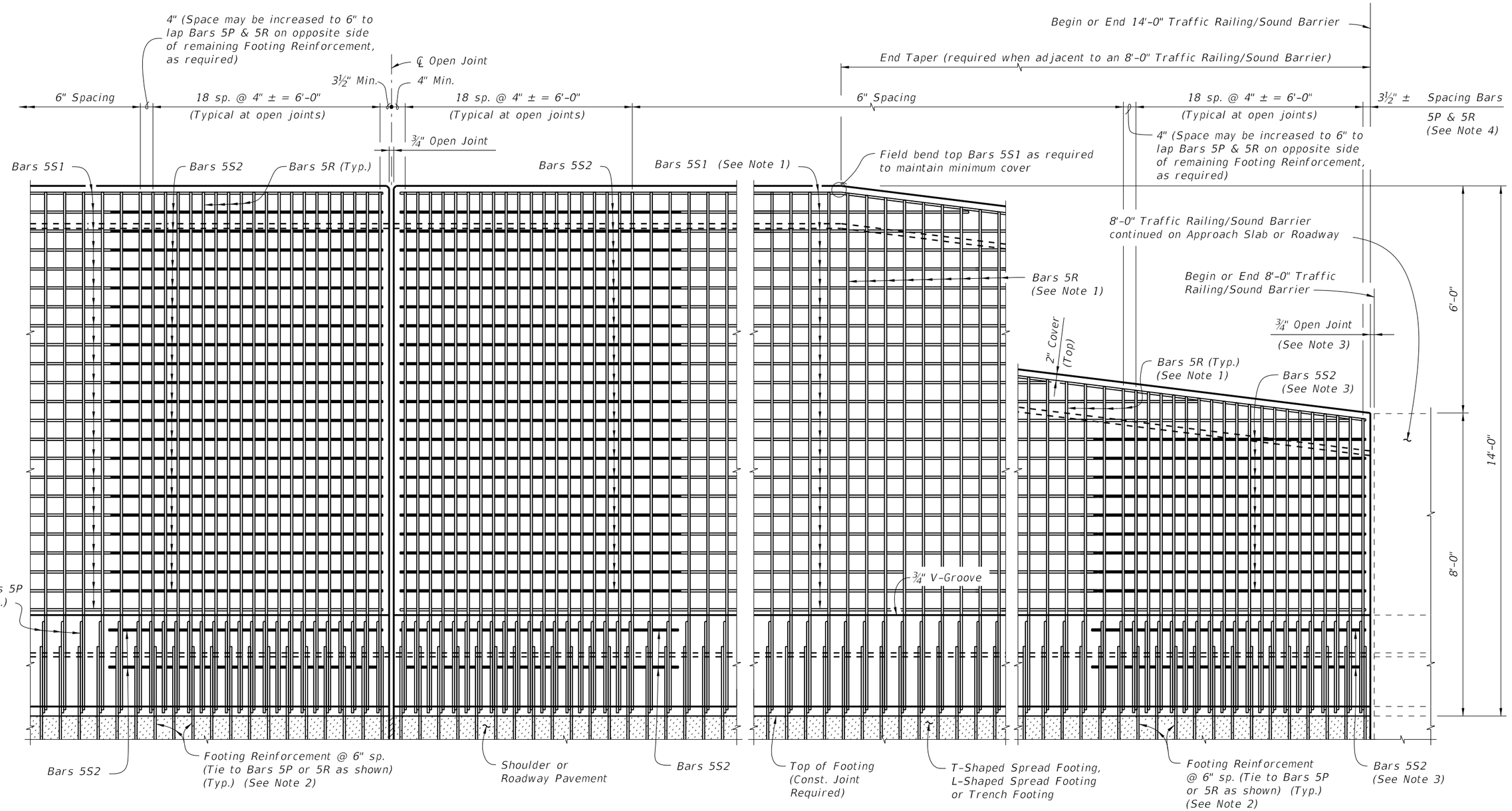

ELEVATION OF TRAFFIC RAILING/SOUND BARRIER REINFORCING STEEL
(Bars 5S1 in Railing not shown for clarity)

ELEVATION OF TRAFFIC RAILING/SOUND BARRIER END TAPER
(Bars 5S1 in Railing not shown for clarity)

NOTES:
1. *Field Cut Bars 5R & 5S1 in Sound Barrier End Taper as required to maintain minimum cover.*
2. *See Index Nos. 5213, 5214 and 5215 for footing reinforcement.*
3. *¾" Open Joint may be omitted when 8'-0" Railing/Sound Barrier End Taper is adjacent to a 14'-0" Traffic Railing/Sound Barrier End Taper as shown on Sheet 1. See Index No. 5210 for reinforcement details and spacing. Bars 5S2 are not required when ¾" Open Joint is omitted.*
4. *Bar spacing shown is along the Gutter Line.*

LAST REVISION	REVISION	DESCRIPTION:			INDEX NO.	SHEET NO.
07/01/05			FDOT DESIGN STANDARDS 2013	TRAFFIC RAILING/SOUND BARRIER (14'-0")	5211	2

6/28/2012 2:13:43 PM rd960rh C:\d\projects\standards\structures\2013book\05211-2of3.dgn

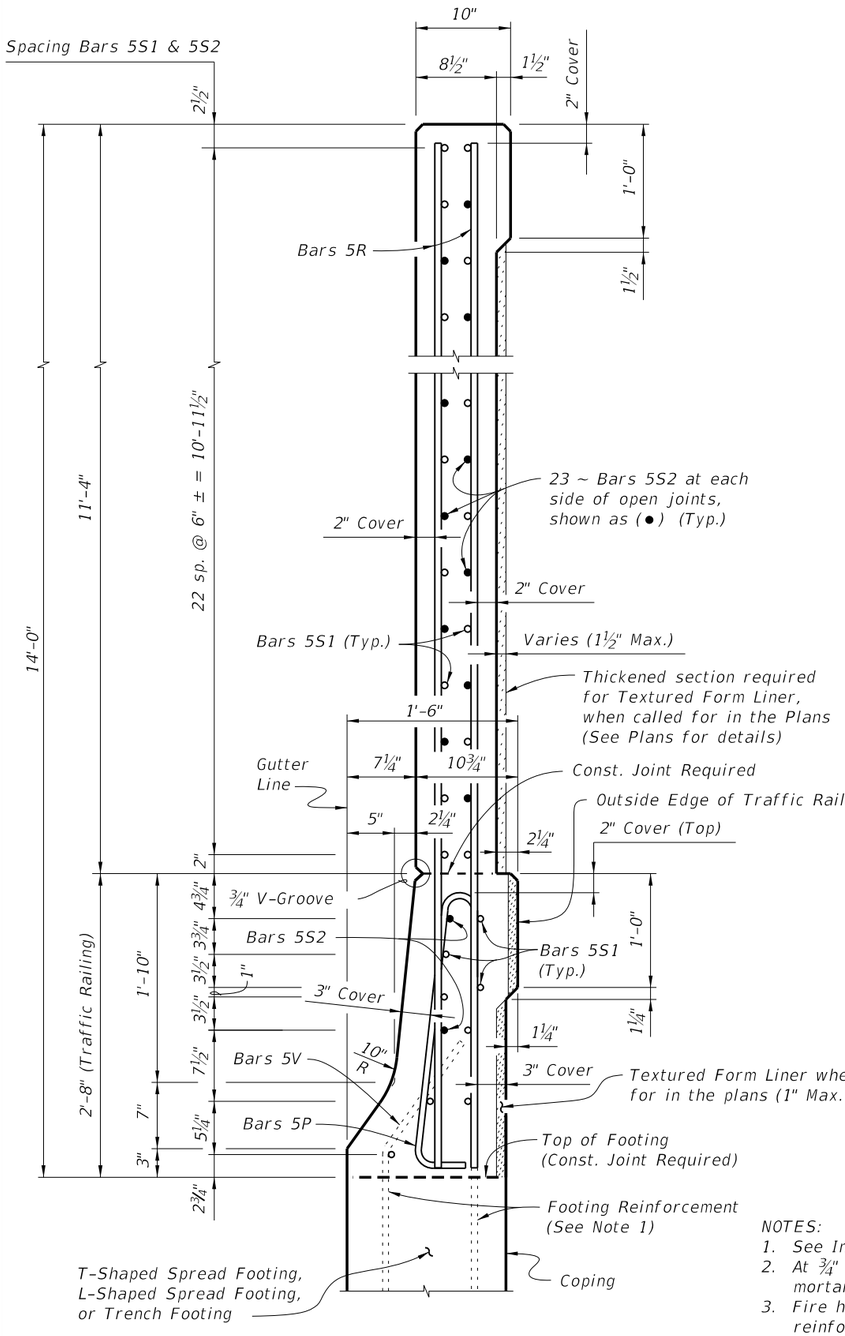

SECTION A-A
TYPICAL SECTION THRU TRAFFIC RAILING/SOUND BARRIER

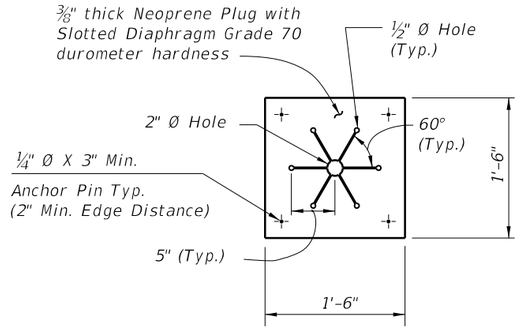

NEOPRENE DIAPHRAGM PLUG DETAIL

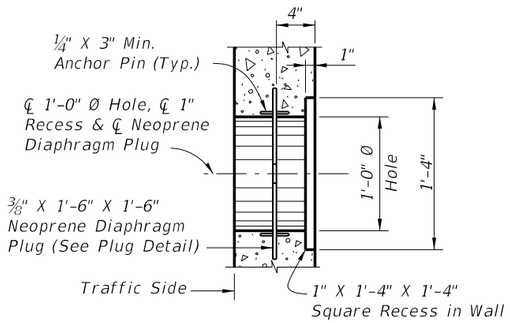

TYPICAL SECTION
FIRE HOSE ACCESS DETAIL

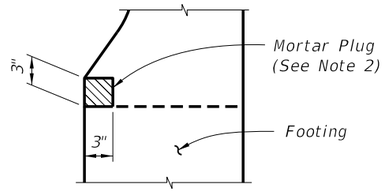

DETAIL "A" -
SECTION AT OPEN JOINT

NOTES:
1. See Index Nos. 5213, 5214 and 5215 for footing reinforcement.
2. At ¾" Open Joints, plug the lower 3" portion of the open joint by filling it with mortar in accordance with Specification Section 400.
3. Fire hose access holes are required at or near fire hydrant locations. Field cut reinforcement as required to maintain 2" minimum cover at access holes. Locate fire hose access holes at least 10'-0" from ¾" open joints when possible.

REINFORCING STEEL BENDING DIAGRAMS

BILL OF REINFORCING STEEL

MARK	SIZE	LENGTH
P	5	5'-7"
R	5	13'-9"
S1	5	AS REQD.
S2	5	7'-3"

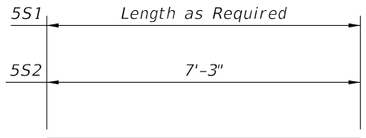

BARS 5S1 & 5S2

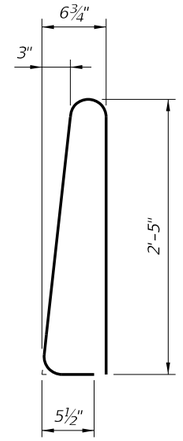

STIRRUP
BAR 5P

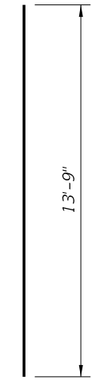

BAR 5R
(Field Cut for End Taper)

REINFORCING STEEL NOTES:

1. All bar dimensions in the bending diagrams are out to out.
2. All reinforcing steel at the open joints will have a 2" minimum cover.
3. Bars 5R may be continuous or spliced at construction joints. Lap splices for Bars 5R and 5S1 will be a minimum of 2'-2".
4. The Contractor may use Welded Wire Reinforcement when approved by the Engineer. Welded Wire Reinforcement will conform to ASTM A 497.

ESTIMATED TRAFFIC RAILING BARRIER/SOUNDWALL QUANTITIES

ITEM	UNIT	QUANTITY
Concrete (Traffic Railing)	CY/FT	0.104
Concrete (Sound Barrier, excluding any thickening)	CY/FT	0.302
Reinforcing Steel (Railing/Sound Barrier) (Typical, excluding Footing Reinforcement)	LB/FT	103.43
Additional Reinf. @ Open Joint (Railing/Sound Barrier)	LB	761.91

CROSS REFERENCE:
For locations of Section A-A and Detail "A", see Sheet 1.

C:\d\projects\Standards\structures\2013book\05211-3of3.dgn rd960rh 2:13:46 PM 6/28/2012

LAST REVISION	REVISION	DESCRIPTION:			INDEX NO.	SHEET NO.
07/01/09			FDOT DESIGN STANDARDS 2013	TRAFFIC RAILING/SOUND BARRIER (14'-0")	5211	3

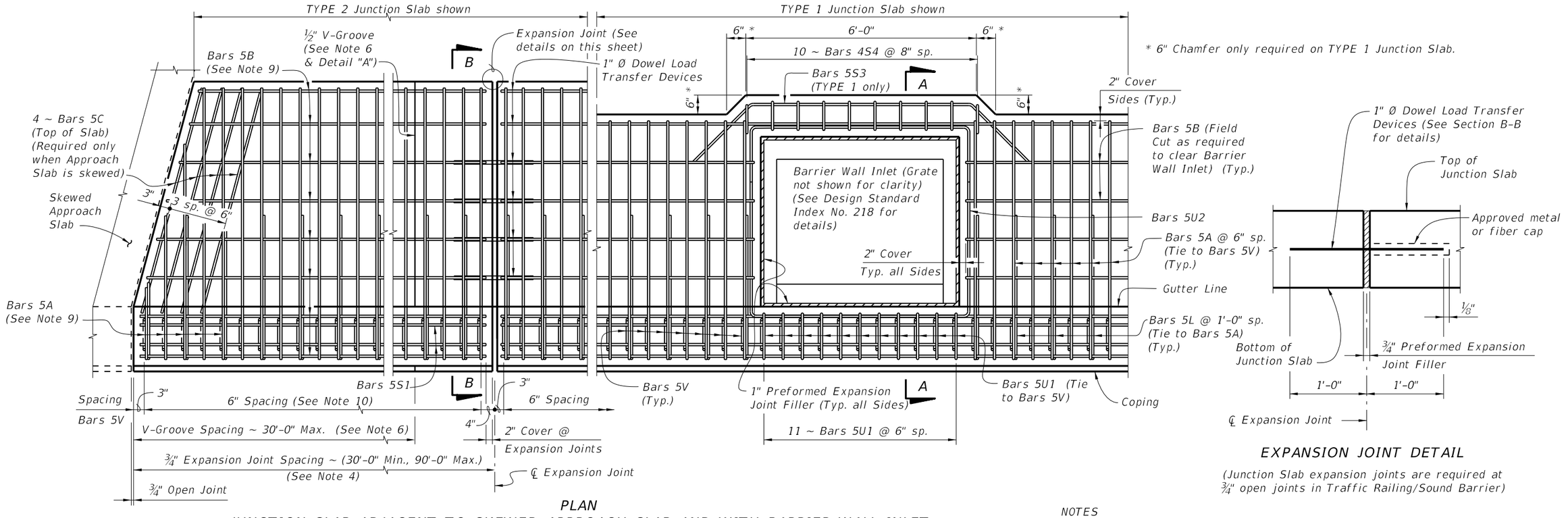

PLAN

JUNCTION SLAB ADJACENT TO SKEWED APPROACH SLAB AND WITH BARRIER WALL INLET

EXPANSION JOINT DETAIL

(Junction Slab expansion joints are required at ¾" open joints in Traffic Railing/Sound Barrier)

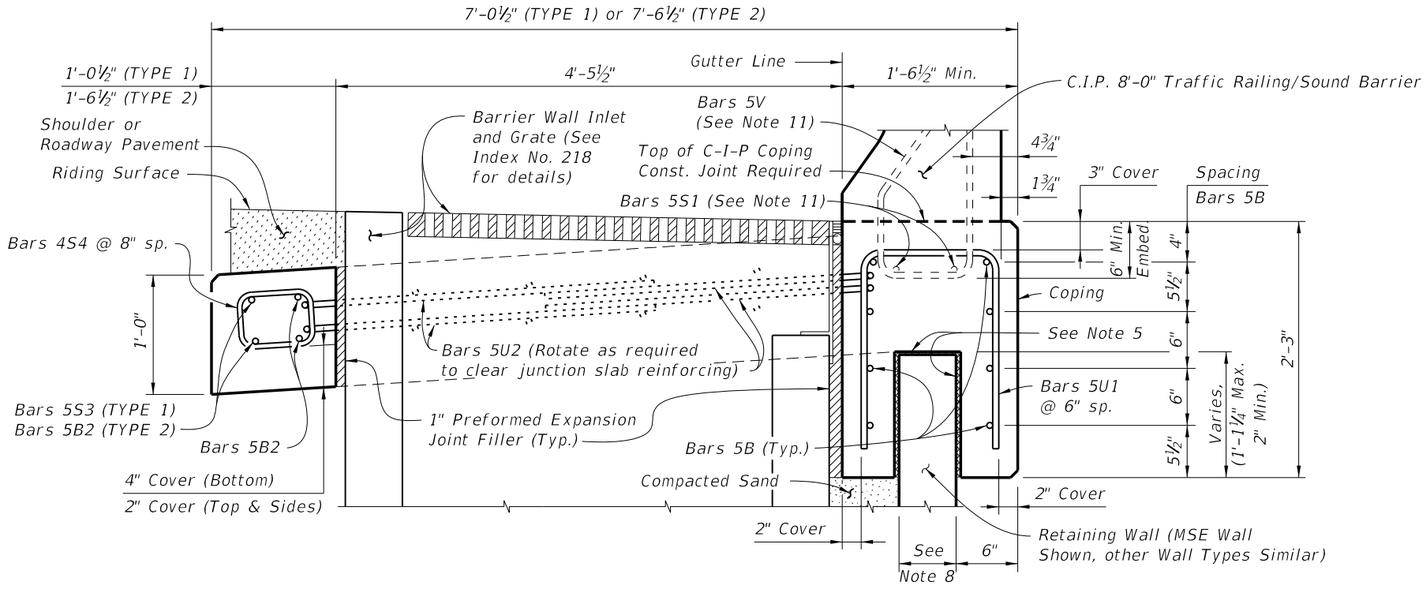

SECTION A-A

SECTION THRU JUNCTION SLAB, BARRIER WALL INLET AND RETAINING WALL

(TYPE 1 Junction Slab Shown, TYPE 2 Similar)

NOTES

1. CONSTRUCTION REQUIREMENTS: Construct the Junction Slab level transversely and expansion joints plumb; do not construct the junction slab perpendicular to the roadway surface. Slip forming is not permitted.
2. CONCRETE: Use Class II concrete for slightly aggressive environments. Use Class IV concrete for moderately or extremely aggressive environments. Concrete will be in accordance with Specification Section 346.
3. REINFORCING STEEL: Provide Grade 60 reinforcing steel in accordance with Specification Section 931. Dowel Load Transfer Devices will be ASTM A 36 smooth round bar and hot-dip galvanized in accordance with Specification Section 962. Install Dowel Load Transfer Devices in accordance with Specification Section 350.
4. EXPANSION JOINTS: Construct ¾" Expansion Joints plumb and perpendicular or radial to Gutter Line. Provide at 90'-0" maximum intervals as shown.
5. Provide two layers of 30 Lb. Roofing Felt on top and Expanded Polystyrene (½" thick) on sides.
6. V-GROOVES: Construct ½" V-Grooves plumb and provide at 30'-0" maximum intervals as shown. Space V-Grooves equally between ¾" Expansion Joints and/or Begin or End Junction Slab. V-Groove locations are to coincide with V-Groove locations in the Railing/Sound Barrier.
7. FILL REQUIREMENTS: Shoulder or Roadway Pavement or Fill is required on top of the junction slab for its entire length on the traffic side of the Railing/Sound Barrier. See Section B-B for details.
8. Actual location & width vary depending on type of Retaining Wall used.
9. Field cut Bars 5A and 5B as required to maintain minimum cover for skewed Approach Slab.
10. Spacing shown is along the Gutter Line.
11. See Index No. 5210 for Bars 5V and 5S1. See Plans for Junction Slab width (TYPE).
12. Work this Index with the following:
    Index No. 5210 – Traffic Railing/Sound Barrier (8'-0").

CROSS REFERENCE:

For Section B-B and Detail "A", see Sheet 2.

LAST REVISION	REVISION	DESCRIPTION:			INDEX NO.	SHEET NO.
01/01/12			FDOT DESIGN STANDARDS 2013	TRAFFIC RAILING/SOUND BARRIER (8'-0") JUNCTION SLAB	5212	1

6/28/2012 2:13:48 PM rd960rh C:\d\projects\standards\structures\2013book\05212-1of2.dgn

REINFORCING STEEL BENDING DIAGRAMS

BILL OF REINFORCING STEEL

MARK	SIZE	LENGTH	
		TYPE 1	TYPE 2
A	5	8'-0"	9'-0"
B	5	AS REQ'D.	AS REQ'D.
C	5	4'-8"	5'-8"
L	5	4'-5"	4'-5"
S3	5	10'-0"	N/A
S4	4	3'-1"	4'-0"
U1	5	4'-9"	4'-9"
U2	5	12'-10"	12'-10"
DOWEL	1" Ø Smooth Bar	2'-0"	2'-0"

REINFORCING STEEL NOTES:

1. All bar dimensions in the bending diagrams are out to out.
2. All reinforcing steel at the open joints will have a 2" minimum cover.
3. Lap splices for Bars 5B will be a minimum of 2'-0".
4. The Contractor may use Welded Wire Reinforcement when approved by the Engineer. Welded Wire Reinforcement will conform to ASTM A 497.

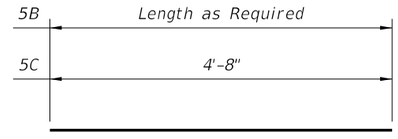

BARS 5B & 5C

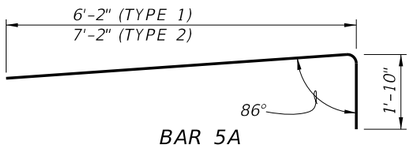

BAR 5A

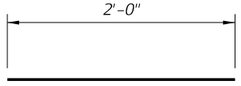

1" Ø DOWEL

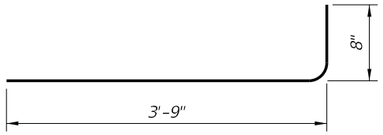

BAR 5L

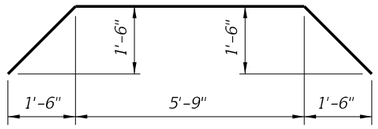

BAR 5S3 (TYPE 1 only)

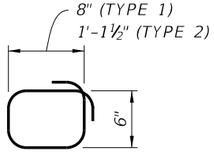

BAR 4S4

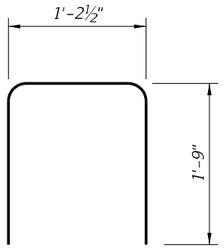

BAR 5U1

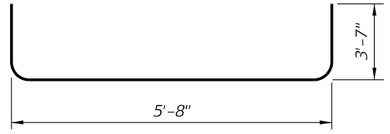

BAR 5U2

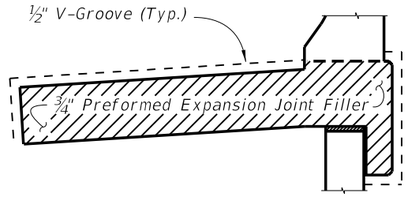

DETAIL "A"

(Showing Locations of ½" V-Grooves and ¾" Preformed Expansion Joint Filler)

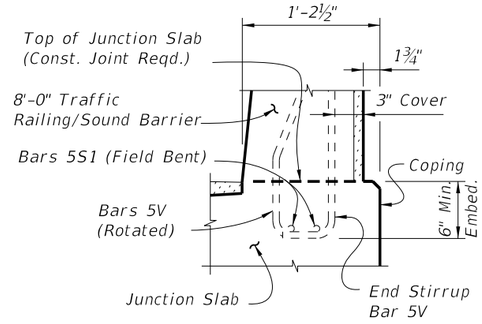

PARTIAL END VIEW OF RAILING END TRANSITION FOR GUARDRAIL ATTACHMENT (Showing Bars 5V and Bars 5S1)

NOTE: See Index No. 5210, Detail "A" for details.

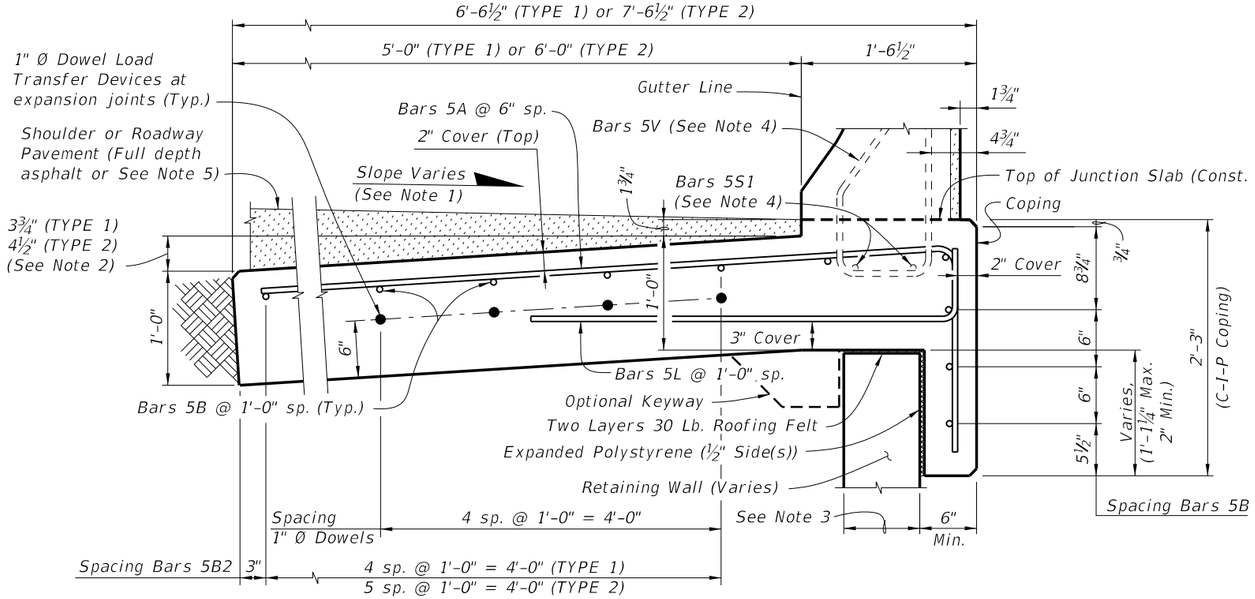

SECTION B-B

TYPICAL SECTION THRU JUNCTION SLAB AND RETAINING WALL

ESTIMATED JUNCTION SLAB QUANTITIES

ITEM	UNIT	QUANTITY	
		TYPE 1	TYPE 2
Concrete (Junction Slab)	CY/FT	0.268	0.305
Reinforcing Steel (Typical)	LB/FT	30.91	34.04
Additional Reinf. @ Expansion Joint	LB	21.36	21.36

NOTES:

1. Match Cross Slope of Travel Lane or Shoulder.
2. The 3¾" & 4½" dimensions correspond to a maximum superelevation of 6.25%. For superelevations exceeding 6.25%, increase this dimension as required to match roadway superelevation.
3. Actual width varies depending on type of Retaining Wall used.
4. See Index No. 5210 for Bars 5V and 5S1.
5. For Rigid Pavement (Concrete), Junction Slab may be thickened to match finished grade.

CROSS REFERENCE:
For location of Section B-B, see Sheet 1.

C:\d*\projects\standards\structures\2013book\05212-2of2.dgn rd960rh 2:13:51 PM 6/28/2012

LAST REVISION	REVISION	DESCRIPTION:			INDEX NO.	SHEET NO.
01/01/12			FDOT DESIGN STANDARDS 2013	TRAFFIC RAILING/SOUND BARRIER (8'-0") JUNCTION SLAB	5212	2

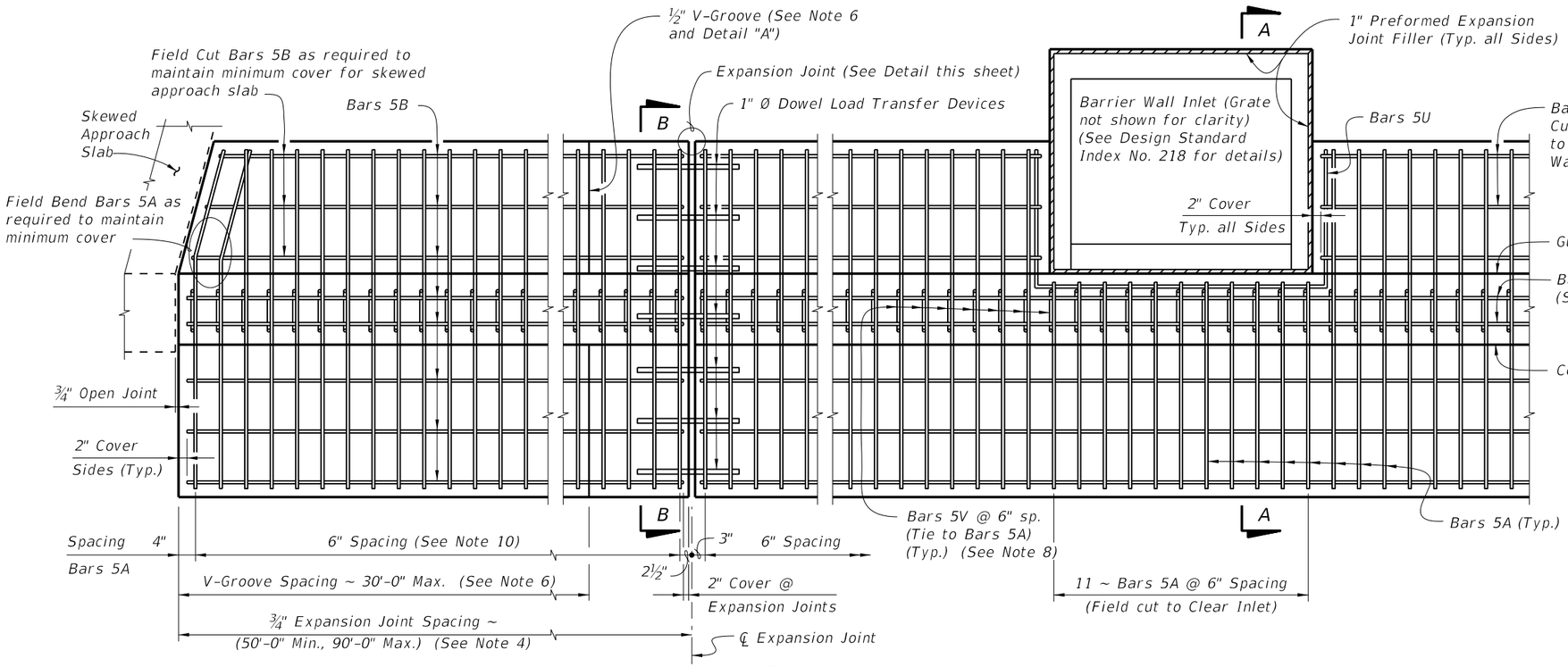

PLAN

SPREAD FOOTING ADJACENT TO SKEWED APPROACH SLAB AND WITH BARRIER WALL INLET

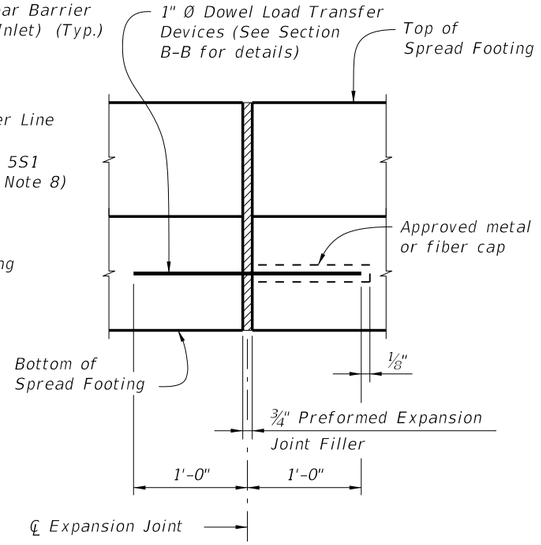

EXPANSION JOINT DETAIL

(Spread Footing expansion joints are required at ¾" open joints in Traffic Railing/Sound Barrier)

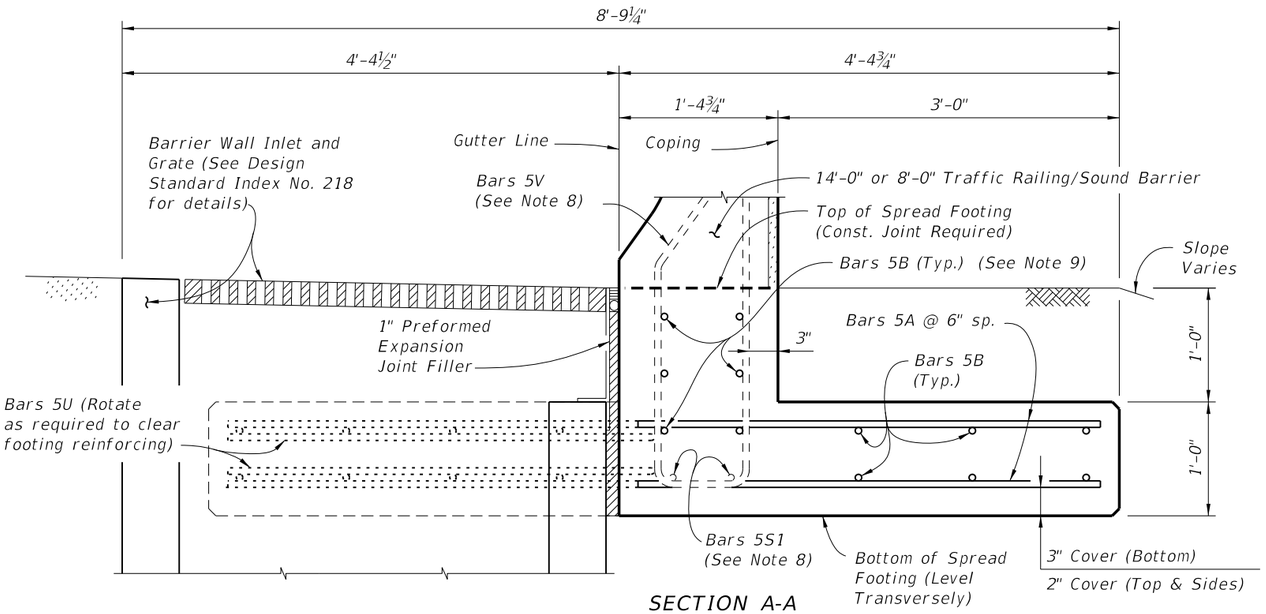

SECTION A-A

SECTION THRU SPREAD FOOTING AND BARRIER WALL INLET

(Bars 5P, 5R and 5S1 in Traffic Railing/Sound Barrier not shown for clarity)

NOTES

1. CONSTRUCTION REQUIREMENTS: Construct the Spread Footing level transversely and expansion joints plumb; do not construct the spread footing perpendicular to the roadway surface. Slip forming is not permitted.
2. CONCRETE: Use Class II concrete for slightly aggressive environments. Use Class IV concrete for moderately or extremely aggressive environments. Concrete will be in accordance with Specification Section 346.
3. REINFORCING STEEL: Provide Grade 60 reinforcing steel in accordance with Specification Section 931. Dowel Load Transfer Devices will be ASTM A 36 smooth round bar and hot-dip galvanized in accordance with Specification Section 962. Install Dowel Load Transfer Devices in accordance with Specification Section 350.
4. Construct ¾" Expansion Joints plumb and perpendicular or radial to Gutter Line. Provide at 90'-0" maximum intervals as shown.
5. Provide and install Preformed Expansion Joint Filler in accordance with Specification Section 932.
6. Construct ½" V-Grooves plumb and provide at 30'-0" maximum intervals as shown. Space V-Grooves equally between ¾" Expansion Joints and/or Begin or End Spread Footing. V-Groove locations are to coincide with V-Groove locations in the Railing/Sound Barrier.
7. FILL REQUIREMENTS: Shoulder or Roadway Pavement or Fill is required on top (1'-0" minimum depth) for the entire length of the spread footing on both sides of the Railing/Sound Barrier. See Section B-B for details.
8. See Index No. 5210 for Bars 5V and 5S1.
9. Place 6 ~ Bars 5B inside Stirrup Bars 5V as shown.
10. Spacing shown is along the Gutter Line.
11. Work this Standard Drawing with one or both of the following:
    a. Index No. 5210 – Traffic Railing/Sound Barrier (8'-0").
    b. Index No. 5211 – Traffic Railing/Sound Barrier (14'-0").

CROSS REFERENCE:
For Section B-B and Detail "A", see Sheet No. 2.

C:\d\projects\standards\structures\2013book\05213-1of2.dgn rd960rh 2:13:53 PM 6/28/2012

REINFORCING STEEL BENDING DIAGRAMS

BILL OF REINFORCING STEEL		
MARK	SIZE	LENGTH
A	5	6'-8"
B	5	AS REQD.
U	5	11'-0"
DOWEL	1" Ø Smooth Bar	2'-0"

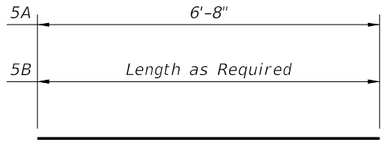

BARS 5A & 5B

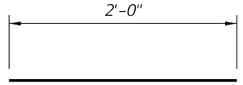

1" Ø DOWEL

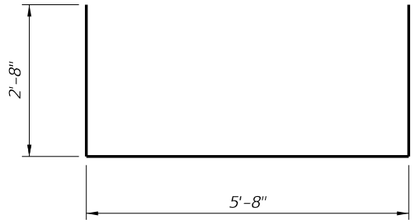

BAR 5U

REINFORCING STEEL NOTES:

1. All bar dimensions in the bending diagrams are out to out.
2. All reinforcing steel at the open joints will have a 2" minimum cover.
3. Lap splices for Bars 5B will be a minimum of 2'-2".
4. The Contractor may use Welded Wire Reinforcement when approved by the Engineer. Welded Wire Reinforcement will conform to ASTM A 497.

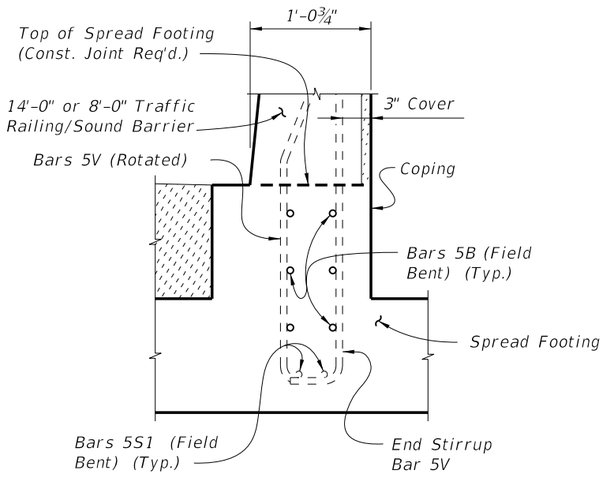

PARTIAL END VIEW OF RAILING END TRANSITION FOR GUARDRAIL ATTACHMENT
(Showing Bars 5V, Bars 5S1 and Bars 5B inside of Stirrup Bars 5V)

NOTE: See Index No. 5210, Detail "A" for details.

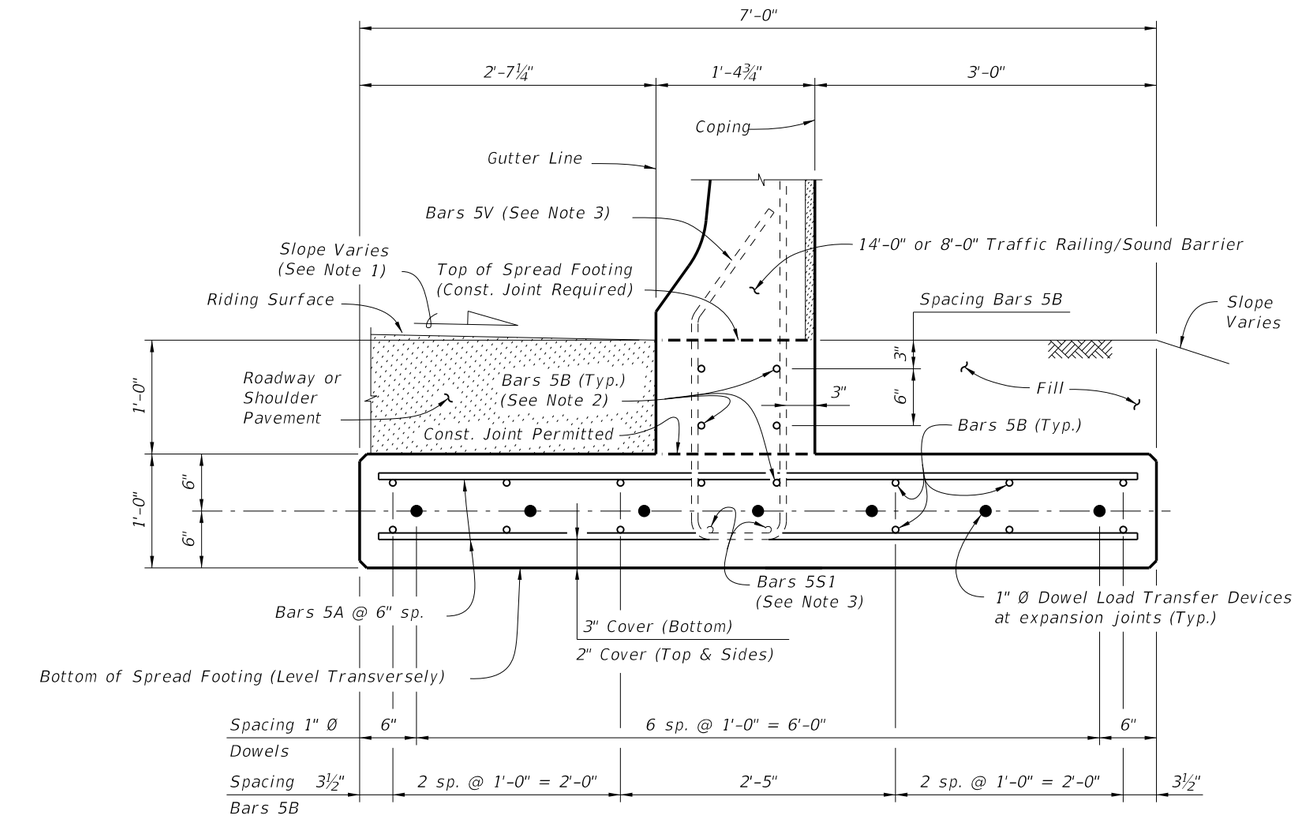

SECTION B-B
TYPICAL SECTION THRU SPREAD FOOTING
(Bars 5P, 5R and 5S1 in Traffic Railing/Sound Barrier not shown for clarity)

NOTES:
1. Match Cross Slope of Travel Lane or Shoulder.
2. Place 6 ~ Bars 5B inside Stirrup Bars 5V as shown.
3. See Index No. 5210 for Bars 5V and Bars 5S1.

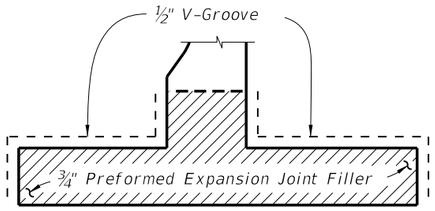

DETAIL "A"

(Showing Locations of ½" V-Grooves and ¾" Preformed Expansion Joint Filler)

ESTIMATED T-SHAPED SPREAD FOOTING QUANTITIES		
ITEM	UNIT	QUANTITY
Concrete (Footing)	CY/FT	0.311
Reinforcing Steel (Typical)	LB/FT	51.80
Additional Reinf. @ Expansion Joint	LB	37.38

Note: The reinforcing steel quantity accounts for the difference between the shorter Stirrup Bars 5V for junction slabs or bridges and the longer Stirrup Bars 5V for spread footings.

CROSS REFERENCE:
For location of Section B-B, see Sheet 1.

6/28/2012 2:13:56 PM rd960rh C:\d\projects\standards\structures\2013book\05213-2of2.dgn

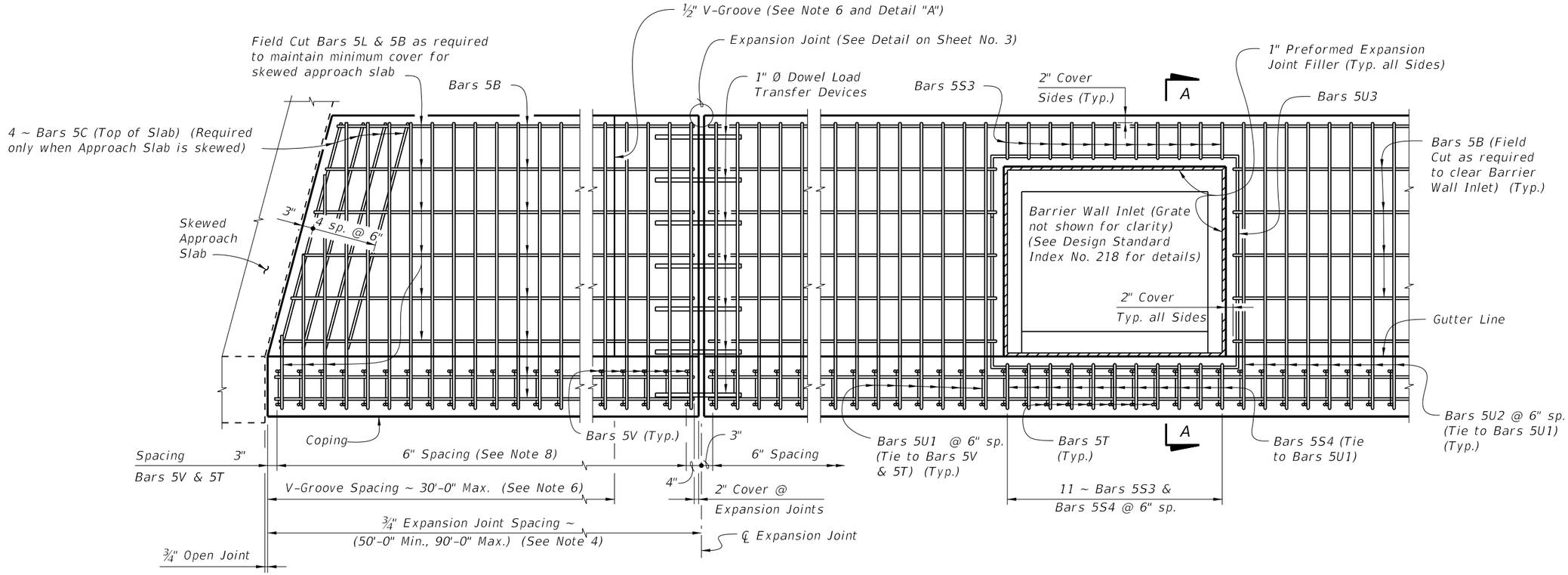

PLAN - OPTION B
SPREAD FOOTING ADJACENT TO SKEWED APPROACH SLAB AND WITH BARRIER WALL INLET
(Option A Similar)

NOTES

1. CONSTRUCTION REQUIREMENTS: Construct the Spread Footing level transversely and expansion joints plumb; do not construct the spread footing perpendicular to the roadway surface. Slip forming is not permitted.
2. CONCRETE: Use Class II concrete for slightly aggressive environments. Use Class IV concrete for moderately or extremely aggressive environments. Concrete will be in accordance with Specification Section 346.
3. REINFORCING STEEL: Provide Grade 60 reinforcing steel in accordance with Specification Section 931. Dowel Load Transfer Devices will be ASTM A 36 smooth round bar and hot-dip galvanized in accordance with Specification Section 962. Install Dowel Load Transfer Devices in accordance with Specification Section 350.
4. Construct ¾" Expansion Joints plumb and perpendicular or radial to Gutter Line. Provide at 90'-0" maximum intervals as shown.
5. Provide and install Preformed Expansion Joint Filler in accordance with Specification Section 932.
6. Construct ½" V-Grooves plumb and provide at 30'-0" maximum intervals as shown. Space V-Grooves equally between ¾" Expansion Joints and/or Begin or End Spread Footing. V-Groove locations are to coincide with V-Groove locations in the Railing/Sound Barrier.
7. FILL REQUIREMENTS: Shoulder or Roadway Pavement and Fill is required on the traffic side of the spread footing for a distance of 4'-0" and the full length of the spread footing (3'-0" minimum depth) on the backside of the spread footing for Option A. Fill is required for a distance of 4'-0" on the backside of the spread footing and the full length of the spread footing (3'-0" minimum depth) on the traffic side of the spread footing for Option B. See Typical Sections on Sheet Nos. 2 and 3 for details.
8. Spacing shown is along the Gutter Line.
9. Work this Standard Drawing with one or both of the following:
   a. Index No. 5210 – Traffic Railing/Sound Barrier (8'-0").
   b. Index No. 5211 – Traffic Railing/Sound Barrier (14'-0").

CROSS REFERENCE:
For Detail "A", see Sheet 3.
For Section A-A and Estimated Quantities, see Sheet 4.

6/28/2012 2:13:58 PM rd960rh C:\d\projects\standards\structures\2013book\05214-1of4.dgn

LAST REVISION	REVISION	DESCRIPTION:				
07/01/05			FDOT DESIGN STANDARDS 2013	TRAFFIC RAILING/SOUND BARRIER L-SHAPED SPREAD FOOTING	INDEX NO. 5214	SHEET NO. 1

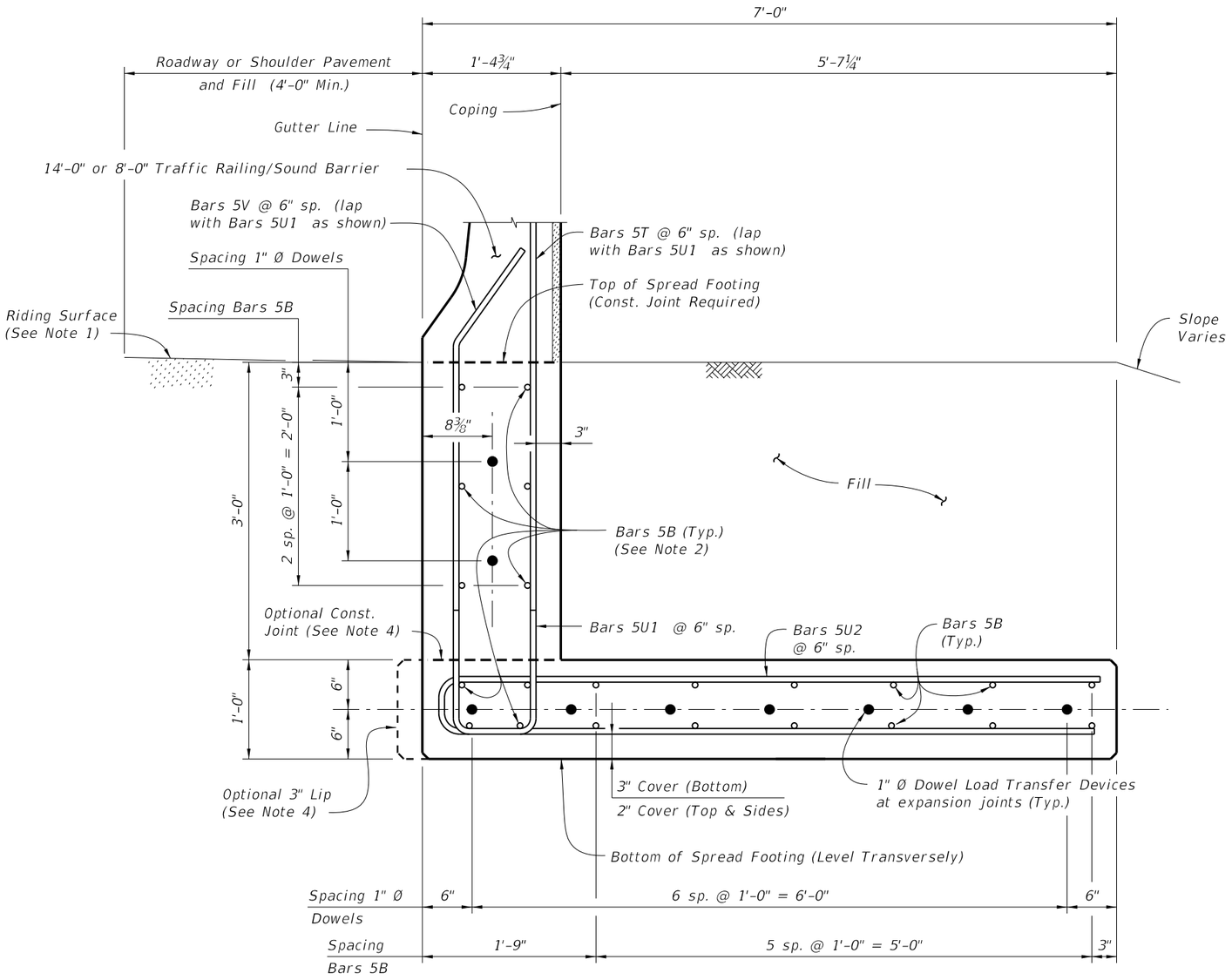

TYPICAL SECTION THRU SPREAD FOOTING - OPTION A
(Bars 5P, 5R and 5S1 in Traffic Railing/Sound Barrier not shown for clarity)

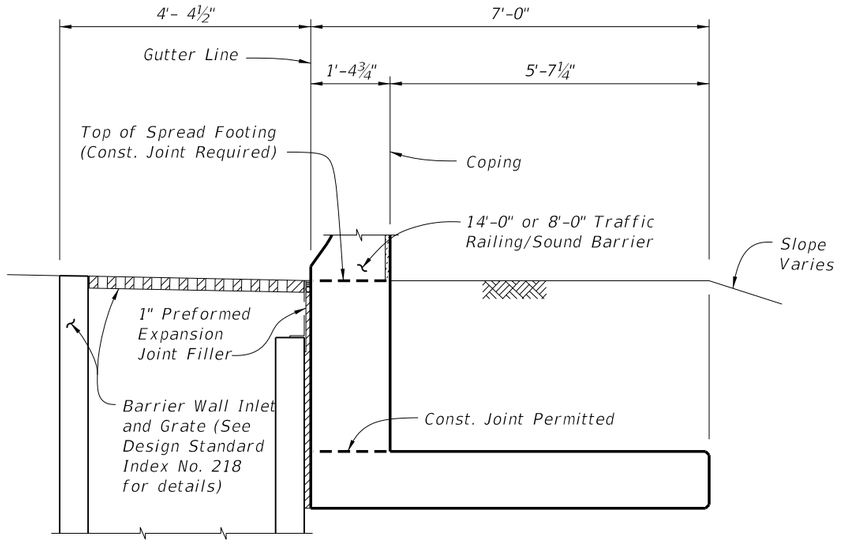

TYPICAL SECTION THRU SPREAD FOOTING AND BARRIER WALL INLET - OPTION A
(Reinforcing Steel not shown for clarity (See Note 3))

NOTES:
1. Match Cross Slope of Travel Lane or Shoulder.
2. Place 10 ~ Bars 5B inside Bars 5U1 as shown.
3. For Reinforcing Steel spacing, see Typical Section Thru Spread Footing – Option A this Sheet.
4. Provide 3" lip when optional construction joint is used.

C:\d\projects\standards\structures\2013book\05214-2of4.dgn rd960rh 2:14:01 PM 6/28/2012

LAST REVISION	REVISION	DESCRIPTION:				
07/01/05			FDOT DESIGN STANDARDS 2013	TRAFFIC RAILING/SOUND BARRIER L-SHAPED SPREAD FOOTING	INDEX NO. 5214	SHEET NO. 2

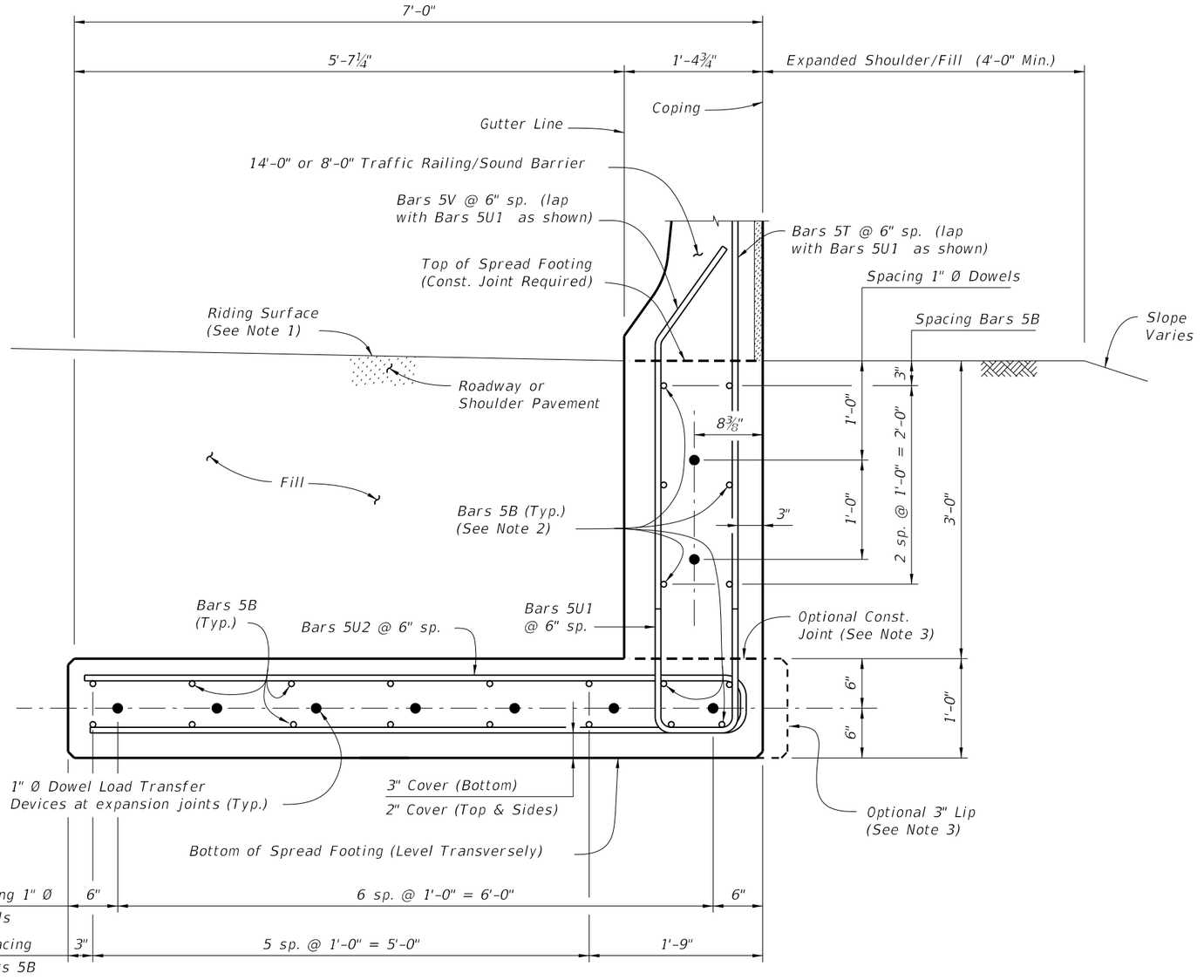

TYPICAL SECTION THRU SPREAD FOOTING - OPTION B
(Bars 5P, 5R and 5S1 in Traffic Railing/Sound Barrier not shown for clarity)

NOTES:
1. Match Cross Slope of Travel Lane or Shoulder.
2. Place 10 ~ Bars 5B inside Bars 5U1 as shown.
3. Provide 3" lip when optional construction joint is used.

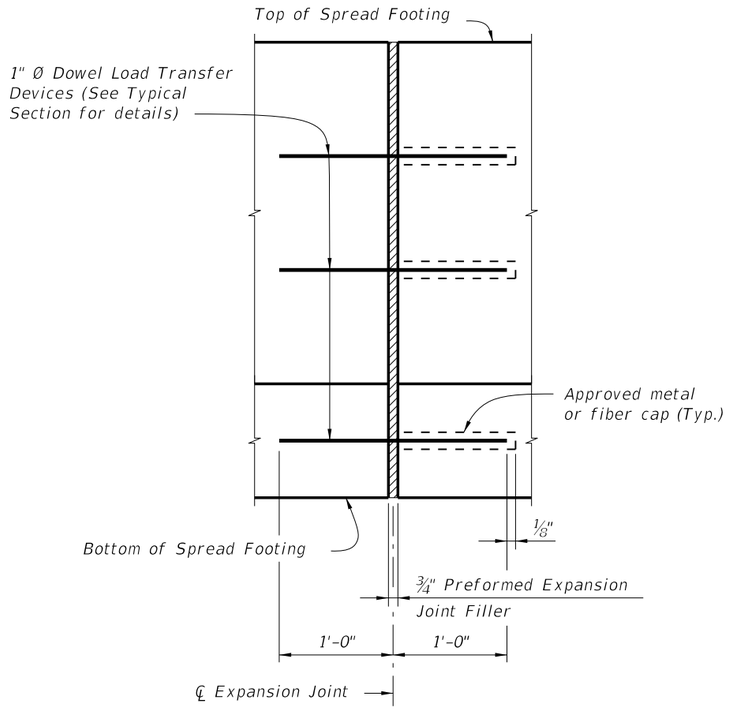

EXPANSION JOINT DETAIL

(Spread Footing expansion joints are required at ¾" open joints in Traffic Railing/Sound Barrier)

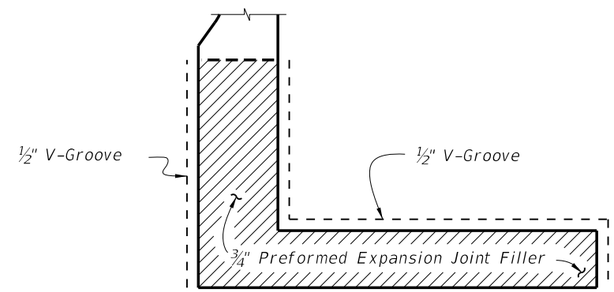

DETAIL "A"
(Option A Shown, Option B Similar)

(Showing Locations of ½" V-Grooves and ¾" Preformed Expansion Joint Filler)

C:\d\projects\standards\structures\2013book\05214-3of4.dgn
rd960rh
2:14:03 PM
6/28/2012

LAST REVISION	REVISION	DESCRIPTION:			INDEX NO.	SHEET NO.
07/01/05			FDOT DESIGN STANDARDS 2013	TRAFFIC RAILING/SOUND BARRIER L-SHAPED SPREAD FOOTING	5214	3

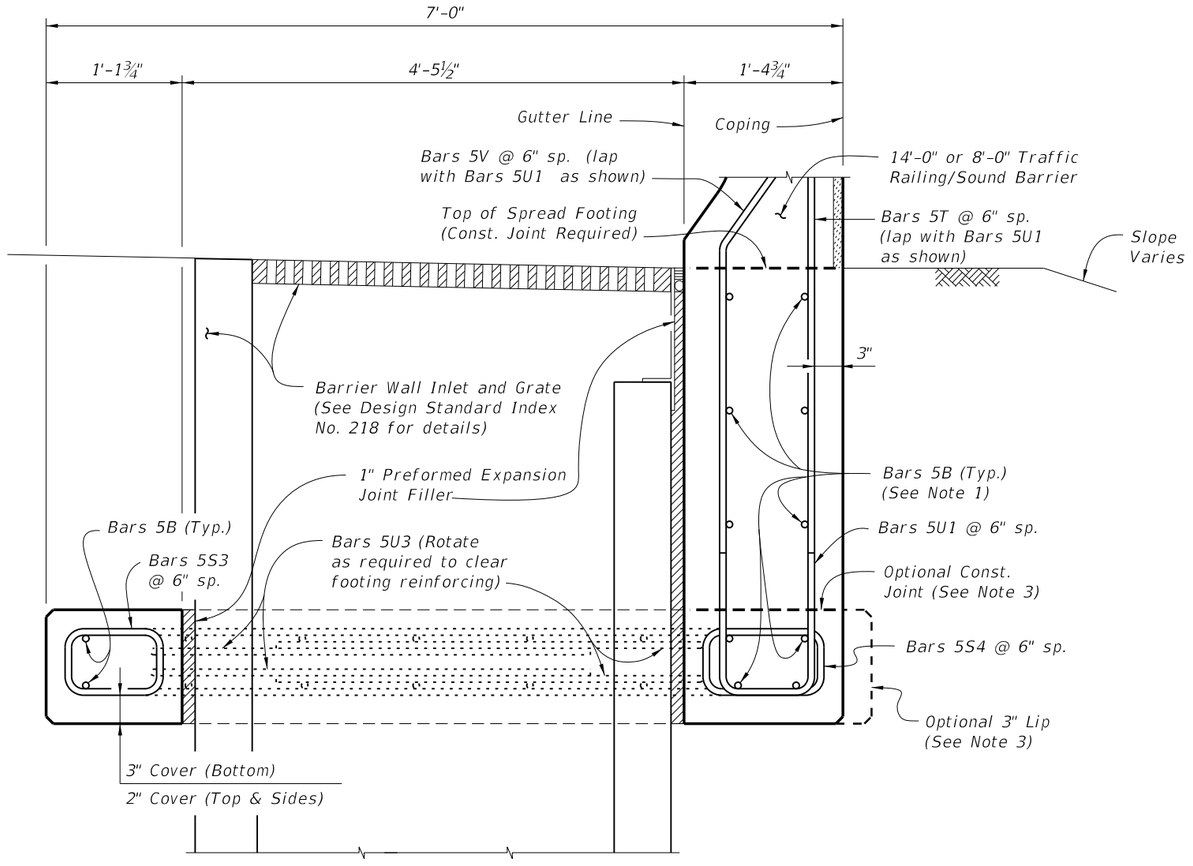

SECTION A-A
TYPICAL SECTION THRU SPREAD FOOTING AND BARRIER WALL INLET - OPTION B
(Bars 5P, 5R and 5S1 in Traffic Railing/Sound Barrier not shown for clarity)

NOTES:
1. Place 10 ~ Bars 5B inside Bars 5U1 as shown.
2. For Reinforcing Steel spacing, see Typical Section Thru Spread Footing – Option B on Sheet 3.
3. Provide 3" lip when optional construction joint is used.

ESTIMATED L-SHAPED SPREAD FOOTING QUANTITIES		
ITEM	UNIT	QUANTITY
Concrete (Footing)	CY/FT	0.414
Reinforcing Steel (Typical)	LB/FT	85.53
Additional Reinf. @ Expansion Joint	LB	48.06

(Subtract 12.69 lb/ft from typical reinforcing steel quantity shown on Index No. 5210 to account for the absence of Stirrup Bars 5V and 5S1 in L-Shaped Spread Footings.)

CROSS REFERENCE:
For location of Section A-A, see Sheet 1.

REINFORCING STEEL BENDING DIAGRAMS

BILL OF REINFORCING STEEL		
MARK	SIZE	LENGTH
B	5	AS REQD.
C	5	5'-6"
S3	5	3'-10"
S4	5	4'-3"
T	5	4'-3"
U1	5	8'-0"
U2	5	13'-11"
U3	5	12'-10"
V	5	3'-10"
DOWEL	1" Ø Smooth Bar	2'-0"

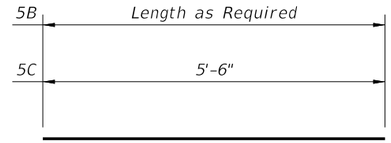

BARS 5B & 5C

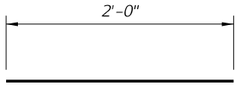

1" Ø DOWEL

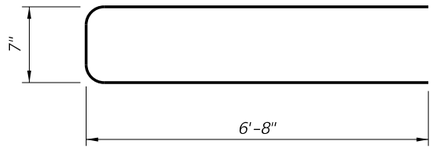

BAR 5U2

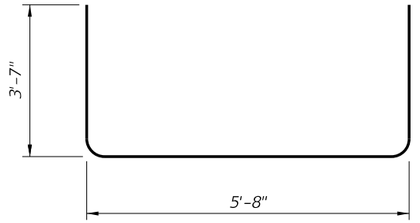

BAR 5U3

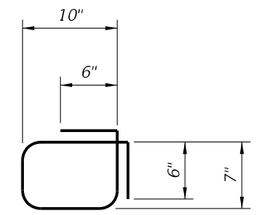

BAR 5S3

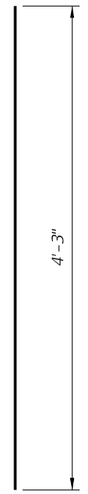

BAR 5T

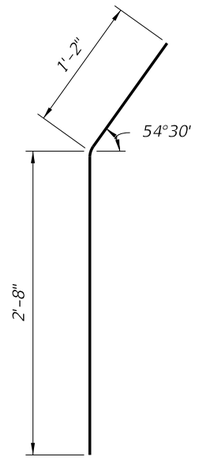

BAR 5V

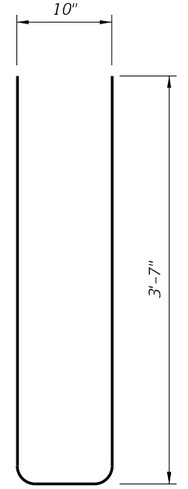

BAR 5U1

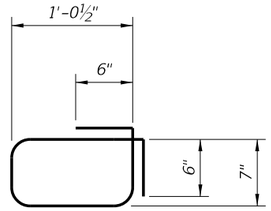

BAR 5S4

REINFORCING STEEL NOTES:

1. All bar dimensions in the bending diagrams are out to out.
2. All reinforcing steel at the open joints will have a 2" minimum cover.
3. Lap splices for Bars 5B will be a minimum of 2'-2".
4. Lap splices Bars 5T and 5V with 5U1 will be a minimum of 2'-2".
5. The Contractor may use Welded Wire Fabric when approved by the Engineer. Welded Wire Fabric will conform to ASTM A 497.

C:\d*\projects\standards\structures\2013book\05214-4of4.dgn rd960rh 2:14:06 PM 6/28/2012

LAST REVISION	REVISION	DESCRIPTION:
07/05/11		

FDOT DESIGN STANDARDS
2013

TRAFFIC RAILING/SOUND BARRIER
L-SHAPED SPREAD FOOTING

INDEX NO. 5214
SHEET NO. 4

REINFORCING STEEL BENDING DIAGRAMS

BILL OF REINFORCING STEEL

MARK	SIZE	LENGTH
A (8'-0" SW)	5	6'-1"
A (14'-0" SW)	5	8'-1"
B	5	AS REQD.
T	5	4'-3"
V	5	3'-10"
DOWEL	1" Ø Smooth Bar	2'-0"

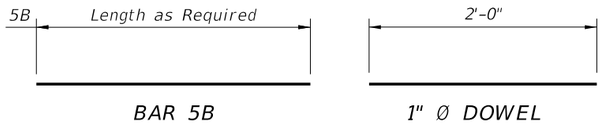

BAR 5B

1" Ø DOWEL

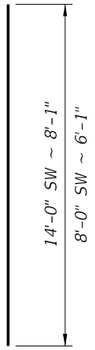

BAR 5A

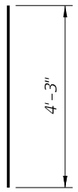

BAR 5T

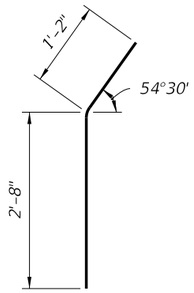

BAR 5V

REINFORCING STEEL NOTES:

1. All bar dimensions in the bending diagrams are out to out.
2. All reinforcing steel at the open joints will have a 2" minimum cover.
3. Lap splices for Bars 5B will be a minimum of 2'-2".
4. Lap splices Bars 5T and 5V with 5U1 will be a minimum of 2'-2".
5. The Contractor may use Welded Wire Reinforcement when approved by the Engineer. Welded Wire Reinforcement will conform to ASTM A 497.

NOTES

1. CONSTRUCTION REQUIREMENTS: Construct the Trench Footing and expansion joints plumb; do not construct the Trench Footing perpendicular to the roadway surface. Slip forming is not permitted.
2. CONCRETE: Use Class II concrete for slightly aggressive environments. Use Class VI concrete for moderately or extremely aggressive environments. Concrete will be in accordance with Specification Section 346.
3. REINFORCING STEEL: Provide Grade 60 reinforcing steel in accordance with Specification Section 931. Dowel Load Transfer Devices will be ASTM A 36 smooth round bar and hot-dip galvanized in accordance with Specification Section 962. Install Dowel Load Transfer Devices in accordance with Specification Section 350.
4. Construct ¾" Expansion Joints plumb and perpendicular or radial to Gutter Line. Provide at 90'-0" maximum intervals as shown.
5. Provide and install Preformed Expansion Joint Filler in accordance with Specification Section 932.
6. Construct ½" V-Grooves plumb and provide at 30'-0" maximum intervals as shown. Space V-Grooves equally between ¾" Expansion Joints and/or Begin or End Trench Footing. V-Groove locations are to coincide with V-Groove locations in the Railing/Sound Barrier.
7. FILL REQUIREMENTS: Fill is required a distance of 4'-0" on both sides for the entire depth of the trench footing. See Typical Section for details.
8. Match Cross Slope of Travel Lane or Shoulder.
9. Spacing shown is along the Gutter Line.
10. Work this Standard Drawing with one or both of the following:
    a. Index No. 5210 – Traffic Railing/Sound Barrier (8'-0").
    b. Index No. 5211 – Traffic Railing/Sound Barrier (14'-0").

LEGEND: SW = Traffic Railing Barrier/Soundwall

ESTIMATED TRENCH FOOTING QUANTITIES

ITEM	UNIT	QUANTITY	
		8'-0" SW	14'-0" SW
Concrete (Footing)	CY/FT	0.336	0.439
Reinforcing Steel (Typical)	LB/FT	56.84	69.36
Additional Reinf. @ Expansion Joint	LB	32.04	42.72

(Subtract 12.69 lb/ft from typical reinforcing steel quantity shown on Index No. 5210 to account for the absence of Stirrup Bars 5V and 5S1 in Trench Footings.)

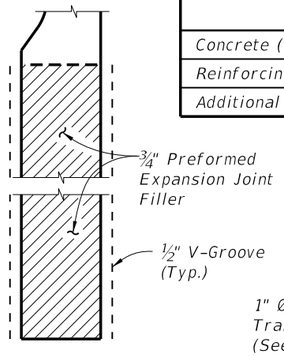

DETAIL "A"

(Showing Locations of ½" V-Grooves and ¾" Preformed Expansion Joint Filler)

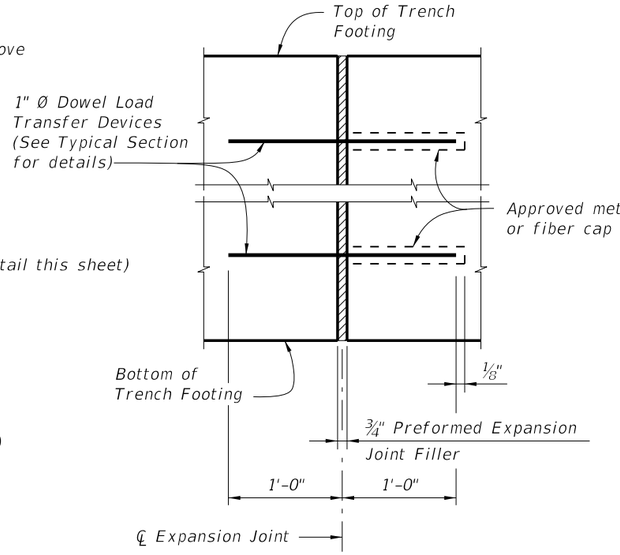

EXPANSION JOINT DETAIL

(Trench Footing expansion joints are required at ¾" open joints in Traffic Railing/Sound Barrier)

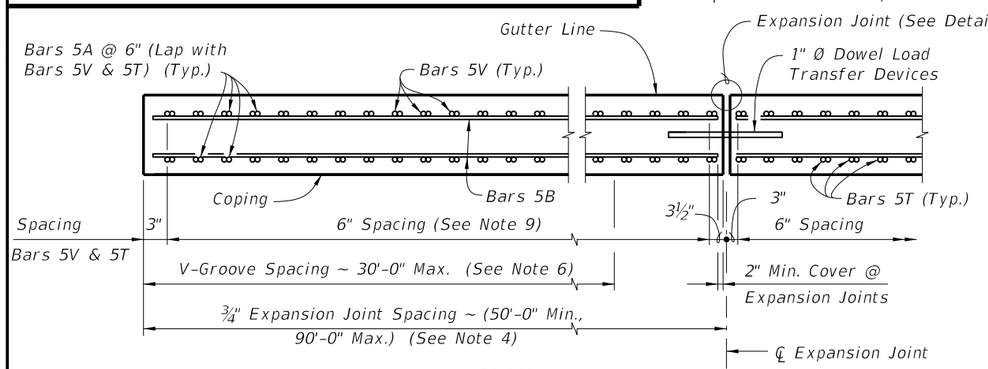

PLAN

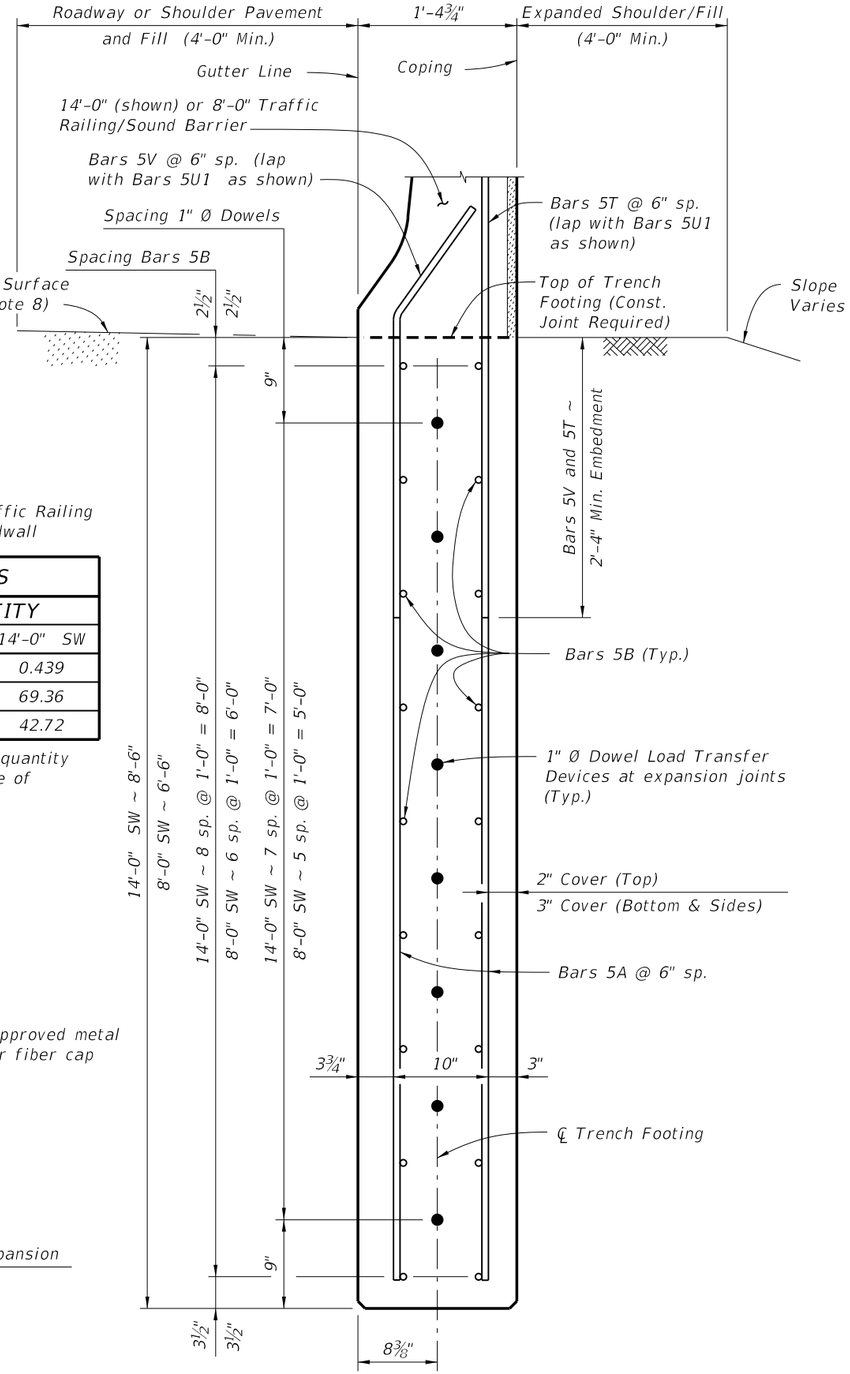

TYPICAL SECTION THRU TRENCH FOOTING

(Bars 5P, 5R and 5S1 in Traffic Railing Barrier/Soundwall not shown for clarity)

C:\d\projects\standards\structures\2013book\05215-1of1.dgn
rd960rh
2:14:08 PM
6/28/2012

LAST REVISION	REVISION	DESCRIPTION:			INDEX NO.	SHEET NO.
07/01/05			FDOT DESIGN STANDARDS 2013	TRAFFIC RAILING/SOUND BARRIER TRENCH FOOTING	5215	1

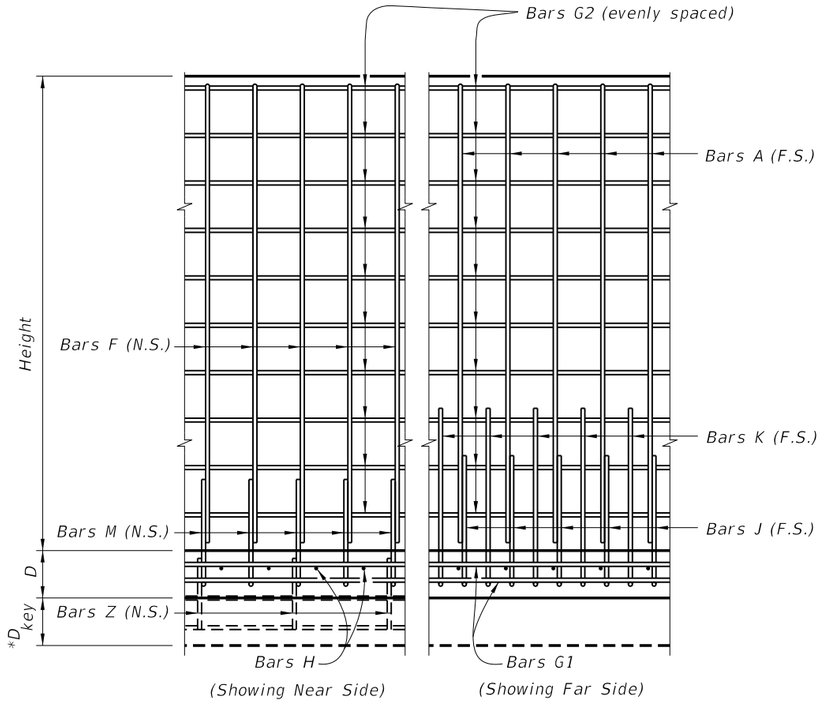

VIEW A-A

(Shear key shown dashed)

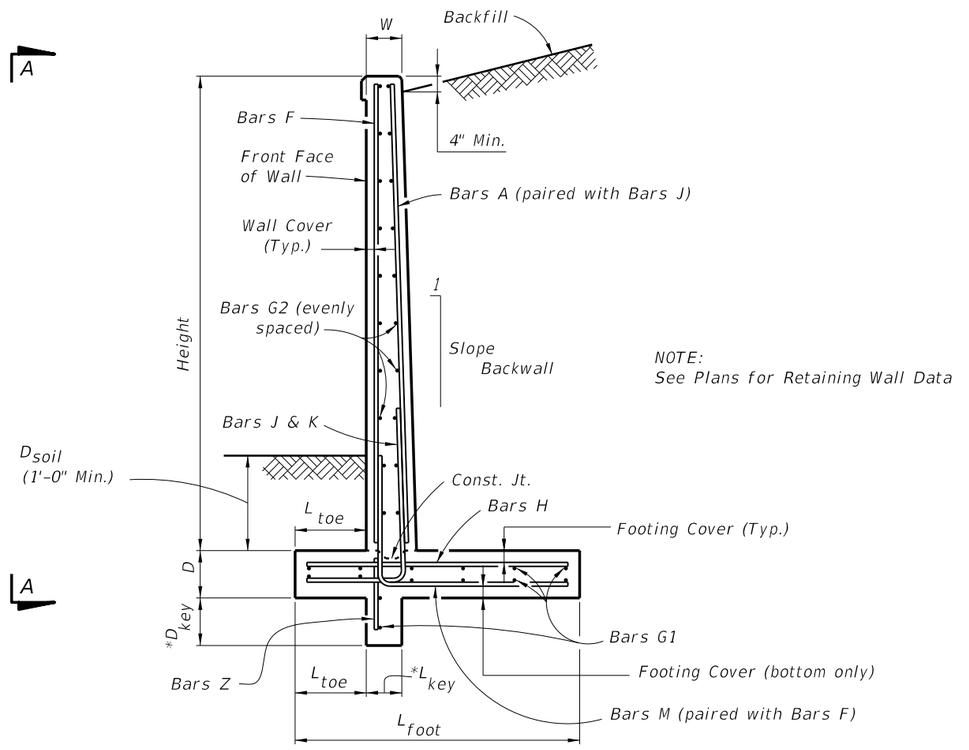

* Shear Key is required only when specified by the Engineer

TYPICAL SECTION

NOTES

DESIGN SPECIFICATIONS:
Design according to FDOT Structures Manual (current edition).

MATERIALS:
All reinforcing steel shall conform to ASTM A615 Grade 60.

SURFACE FINISH:
A Class 5 Applied Finish Coating shall be applied to the top of the wall and the exposed face above ground line.

ARCHITECTURAL SURFACE TEXTURES:
Alternate Architectural Surface Textures may be substituted for the Striated Pattern shown when approved by the Engineer. Concrete required for Architectural Surface Textures is not included in the quantities.

TRAFFIC RAILING BARRIER:
If there is a Traffic Railing Barrier on the wall, Wall Joints and Barrier V-Grooves shall align and Wall Expansion Joints and Barrier Open Joints shall align.

FOUNDATION: Prepare the soil below the footing in accordance with the requirements for spread footings in Specification Section 455.

PAYMENT:
All Retaining Wall costs, including all miscellaneous costs, shall be paid for at the unit contract price for either Class II, III or IV Concrete (Retaining Walls) (CY) and Reinforcing Steel (Retaining Walls) (lbs.). Retaining Wall quantities shall not include concrete nor reinforcing steel for Traffic Railings/Junction Slab. Traffic Railing/Junction Slab shall be paid for under Concrete Traffic Railing Barrier with Junction Slab.

BENDING DIAGRAM

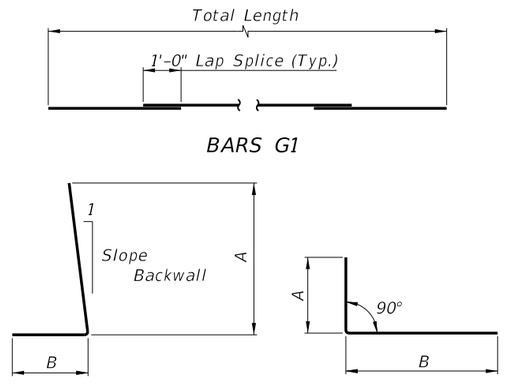

NOTE:
All bar dimensions are out-to-out

6/28/2012 2:14:10 PM rd960rh C:\d\projects\standards\structures\2013book\06010-1of2.dgn

**Wall joint spacing 25 ft. maximum.
At minimum, every fourth wall joint to be an expansion joint.
See Plans for actual wall joint spacing and expansion joint location.

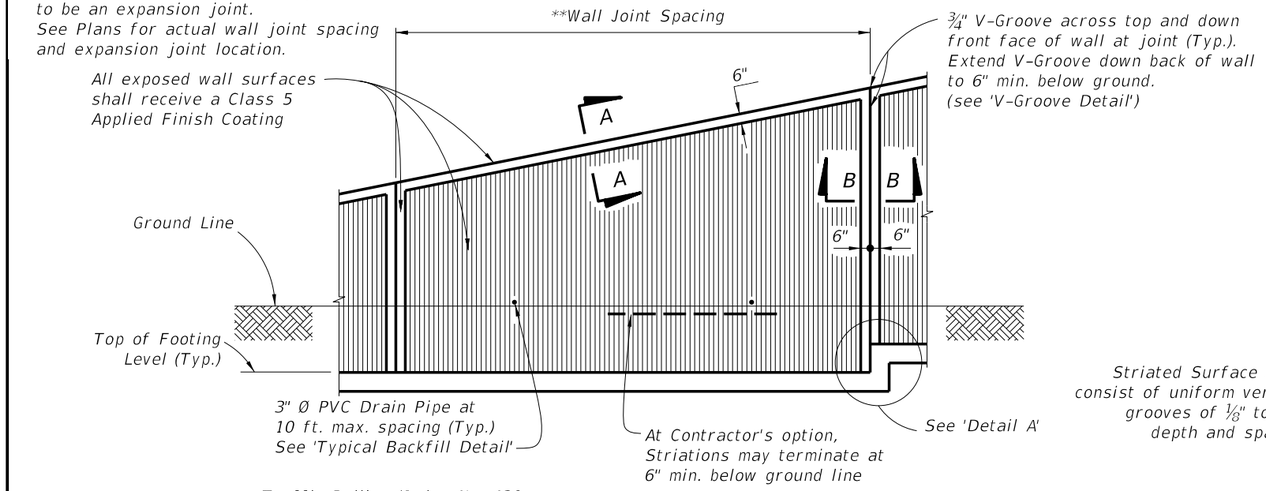

FRONT ELEVATION

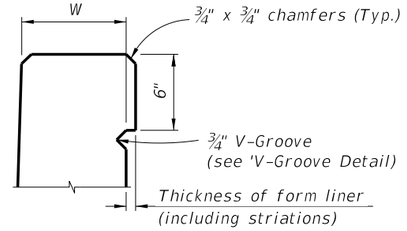

SECTION A-A

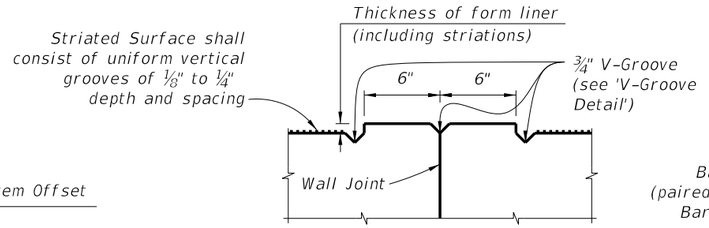

SECTION B-B

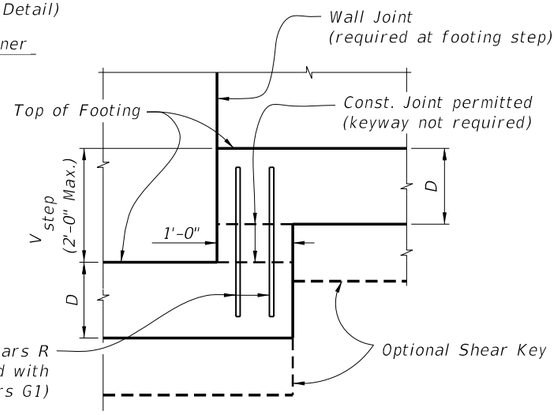

DETAIL A

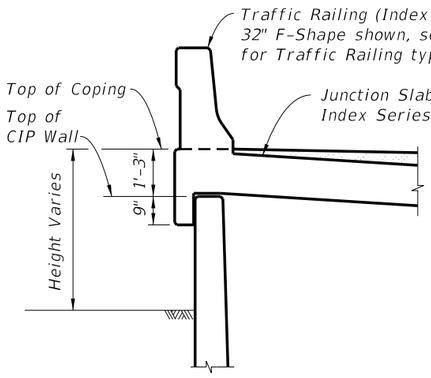

TRAFFIC RAILING/JUNCTION SLAB DETAIL

(32" F-Shape Shown, other Traffic Railings similar)
(for 32" F-Shape Traffic Railing (as shown), see Index No. 420; for 32" Vertical Shape Traffic Railing, see Index No. 423; for 42" Vertical Shape Traffic Railing, see Index No. 422)

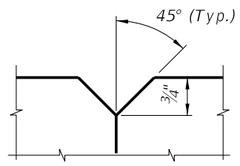

V-GROOVE DETAIL

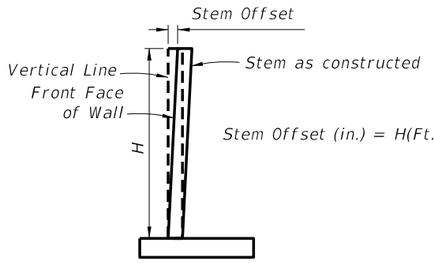

STEM OFFSET VALUES

(for H < 20 Ft.)

WALL JOINT DETAIL

*Key to stop at top of footing and 6" from top of wall. Joint across footing and top of wall to be straight line.

TYPICAL CORNER JOINT DETAIL

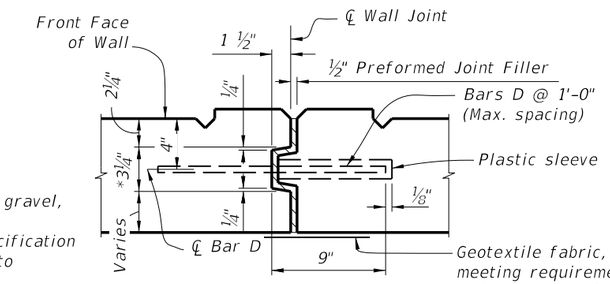

EXPANSION JOINT DETAIL

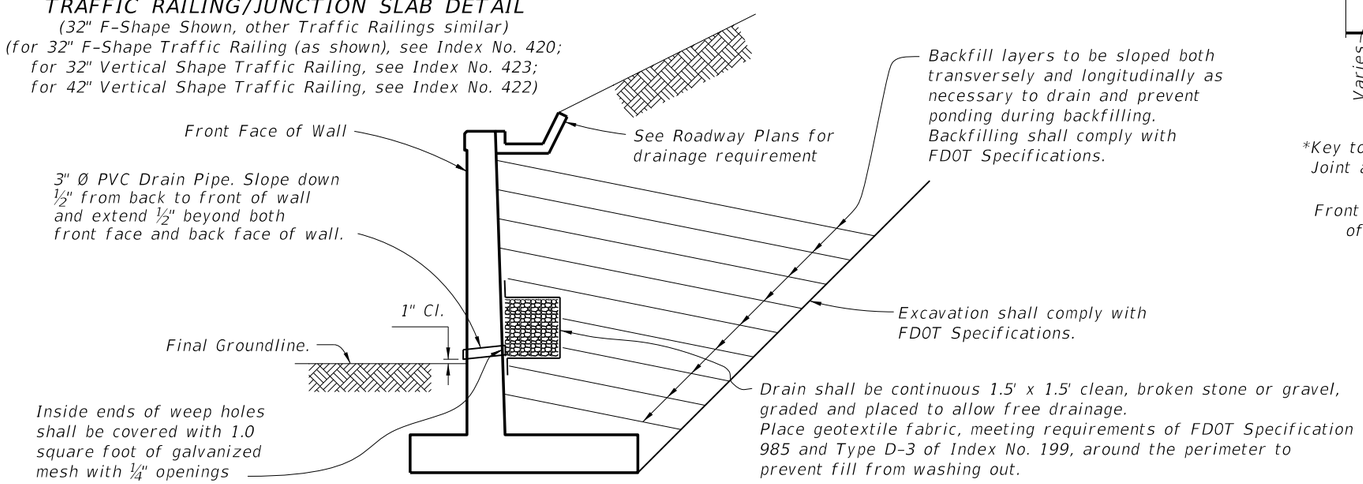

TYPICAL BACKFILL DETAIL

C:\d\projects\standards\structures\2013book\06010-2of2.dgn rd960rh 2:14:13 PM 6/28/2012

LAST REVISION	REVISION	DESCRIPTION:				
01/01/11			FDOT DESIGN STANDARDS 2013	C-I-P CANTILEVER RETAINING WALL	INDEX NO. 6010	SHEET NO. 2

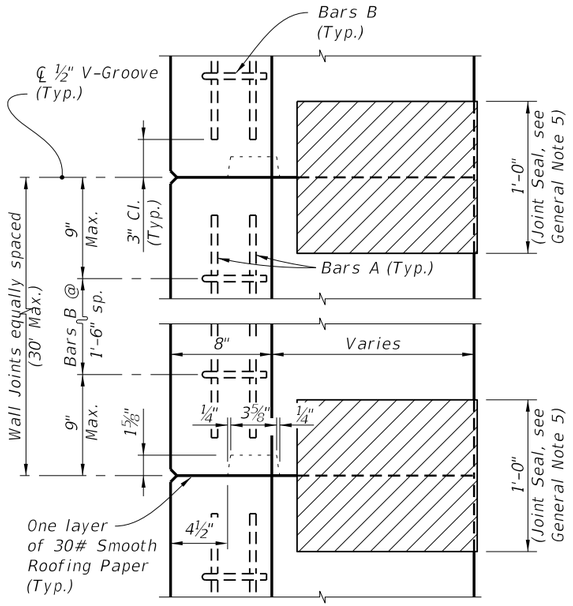

KEYWAY & WALL JOINT DETAIL
(TOP VIEW)

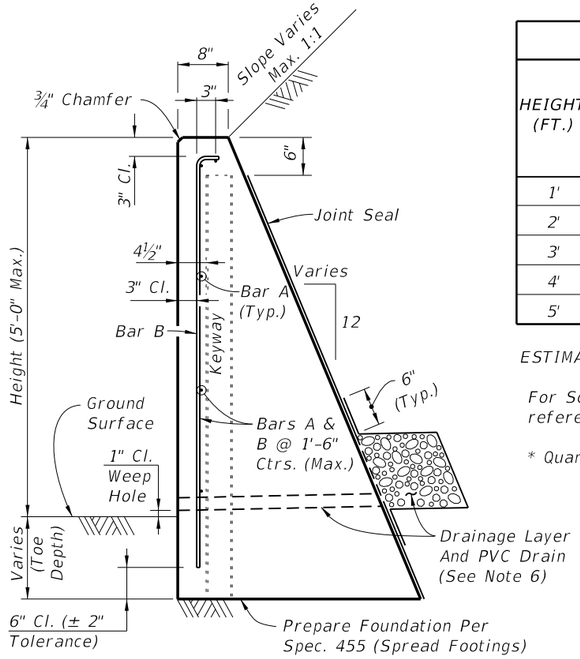

TYPICAL SECTION

ESTIMATED QUANTITIES FOR WALL					
HEIGHT (FT.)	PER LINEAR FOOT OF WALL				WEEP HOLES & DRAIN REQD.
	CLASS NS CONCRETE (CY)			REINF. STEEL (LB.)	
	SCHEME 1	SCHEME 2	SCHEME 3		
1'	0.08	0.11 (0.20*)	0.03	3 (4*)	No
2'	0.14	0.20 (0.32*)	0.09	4 (5*)	No
3'	0.22	0.32 (0.47*)	0.29	5 (6*)	Yes
4'	0.32	0.47 (0.65*)	0.43	6 (7*)	Yes
5'	0.43	0.65 (0.85*)	0.60	7 (8*)	Yes

ESTIMATED QUANTITIES NOTES:

For Scheme 3 Junction Slab and Traffic Railing see the referenced Design Standards for estimated quantities.

* Quantity for 2'-0" Toe Depth in Scheme 2.

GENERAL NOTES

1. Gravity walls constructed as extensions of reinforced concrete retaining walls, except walls of proprietary designs, shall have the same face texture and finish as the reinforced concrete retaining wall.
2. Concrete for Gravity Wall shall be Class NS per Section 347. Concrete for Scheme 3 Junction Slab and Traffic Railing shall be Class II per Section 346, unless otherwise specified in the plans.
3. Reinforcing steel shall be ASTM A615, Grade 40 or 60 provided at the max. spacings shown. ASTM A185 Smooth or ASTM A497 Deformed Welded Wire Reinforcement (WWR) may be substituted on an equal area basis. Do not increase bar/wire spacing for Grade 60 reinforcing steel or WWR.
4. When required, for adjunct guiderail see the plans, Index No. 870 or 880 as appropriate. For adjunct Type B fence see Index No. 802.
5. Joint seal to be two layers of 30# smooth roofing paper or Type D-5 geotextile fabric in accordance with Index No. 199. Mop all contact surfaces of concrete and roofing paper or geotextile fabric with cut-back asphalt. Stop roofing paper or geotextile fabric 6" below top of wall).
6. Provide a continuous 1'x1' clean gravel or crushed rock drain for wall heights 3 ft. and higher. Wrap drainage layer as shown, with Type D-3 geotextile fabric in accordance with Index No. 199. Provide 8"x8" galvanized mesh with ¼" openings, at the inside end of the PVC Drain Pipe. Provide 2" Ø PVC Drain Pipe (Sch. 40) at 10 ft. max. spacing (When Drainage Layer required). Locate minimum 2'-0" clear of wall joints.
7. Cost of reinforcing steel, face texture, finish, joint seal, drain pipes, drainage layer, galvanized mesh and geotextile fabric to be included in the Contract Unit Price for Concrete Class NS, Gravity Wall. Cost of concrete for Junction Slab in Scheme 3, to be included in Contract Unit Price for Concrete Traffic Railing Barrier With Junction Slab. Adjunct railings or fences to be paid for separately.

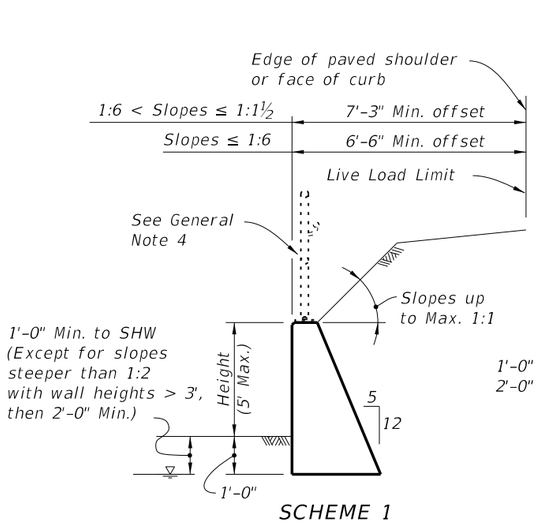

SCHEME 1
(No Traffic Loading Effects)

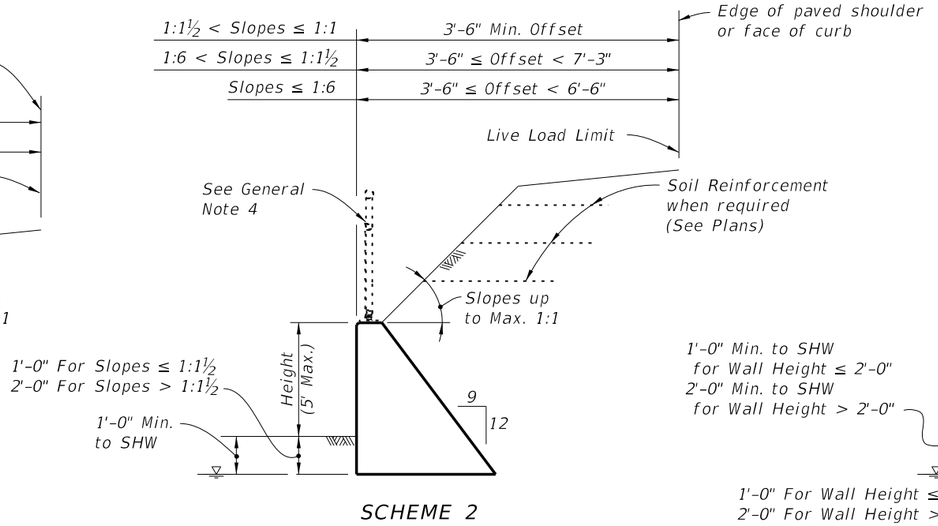

SCHEME 2
(With Traffic Loading or Slopes > 1:1½)

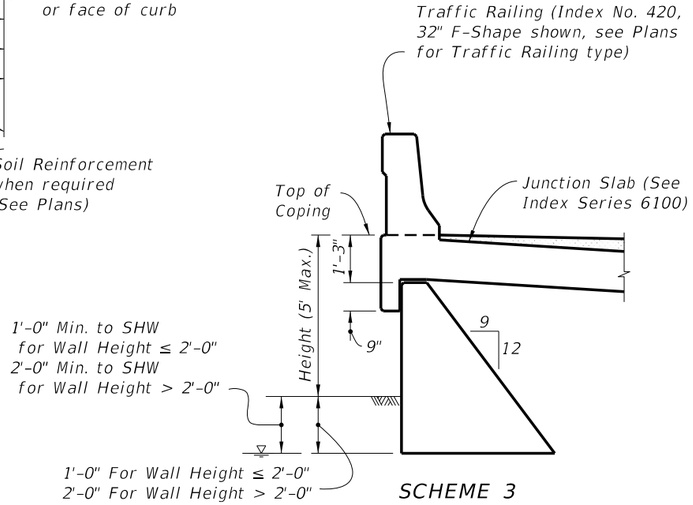

SCHEME 3
(With Traffic Railing)

BILL OF REINFORCING STEEL		
MARK	SIZE	LENGTH
A	4	As Reqd.
B	4	As Reqd.

BAR BENDING DIAGRAM

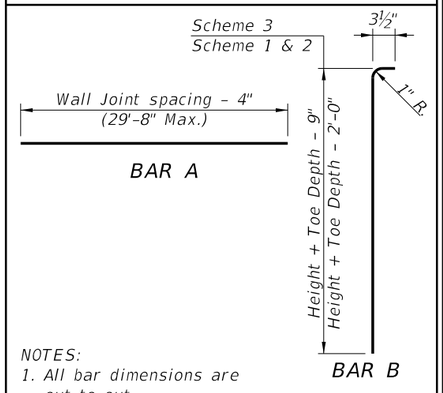

NOTES:
1. All bar dimensions are out to out.
2. Lap splices for Bars A must be a minimum of 1'-6".

LAST REVISION	REVISION	DESCRIPTION:		INDEX NO.	SHEET NO.
01/01/11			FDOT DESIGN STANDARDS 2013	6011	1

C-I-P GRAVITY WALL

C:\d\projects\standards\structures\2013book\06011-1of1.dgn rd960rh 2:14:15 PM 6/28/2012

NOTES

SPECIFICATIONS:

1. General Specifications:
   The Florida Department of Transportation "Standard Specifications for Road and Bridge Construction", Current Edition and Supplements as Amended.
2. Design Specifications:
   a. Florida Department of Transportation (FDOT) "Structures Design Guidelines", Current Edition.
   b. American Association of State Highway and Transportation Officials (AASHTO) "LRFD Bridge Design Specifications", Current Edition.
   c. AASHTO-AGC-ARTBA Task Force 27 (Ground Modification Techniques), "Insitu Soil Improvement Techniques", January 1990.

DESIGN CRITERIA:

1. Design is based on the assumption that the material contained within the reinforced soil volume, methods of construction and quality of prefabricated materials are in accordance with Specification Section 548 and Chapter 3 of the FDOT Structures Design Guidelines.
2. It is the responsibility of the Engineer of Record to determine that the maximum factored bearing pressure shown for the wall does not exceed the factored bearing resistance of the foundation for that specific wall location.
3. The Wall Company is responsible for internal stability of the wall. External stability design, including foundation and slope stability, is the responsibility of the Engineer of Record.
4. If there are manholes and/ or drop inlets present, design and analysis for both internal and external stability shall be considered.

SOIL PARAMETERS:

1. See Wall Control Drawings for soil characteristics of foundation material to be used in the design of the wall system.
2. The Contractor will provide soil design parameters for backfill material based on the actual soil characteristics utilized at the site.

MATERIALS:

1. Concrete Class: See Wall Control Drawings.
2. See Specification Section 548 for material requirements.
3. For additional material requirements see the Wall Company's General Notes.

CONSTRUCTION:

1. Walls will be constructed in accordance with Specification Section 548 and the Wall Company's instructions.
2. For location and alignment of retaining walls, see Wall Control Drawings.
3. If present, consider in design and analysis and locate manholes and drop inlets as shown on wall elevations.
4. Refer to Wall Control Drawings of individual walls for minimum reinforcement strip/mesh length, factored bearing resistance's, minimum wall embedment and anticipated long term and differential settlements.
5. The Contractor is responsible for controlling water during storm events as needed during construction.
6. It is the Contractor's responsibility to determine the location of any guardrail posts behind retaining wall panels. Prior to placement of the top layer of soil reinforcement, individual reinforcing strips/mesh may be skewed (15° maximum) to avoid the post locations if authorized by the Engineer. No cutting of soil reinforcement is allowed unless shown on Shop Drawings and approved by the Engineer. Any damage done to the soil reinforcement due to installation of the guardrail will be repaired by the Contractor at the Contractor's expense. Repair method will be approved by the Engineer.
7. If existing or future structures, pipes, foundations or guardrail posts within the reinforced soil volume interfere with the normal placement of soil reinforcement and specific directions have not been provided on the plans, the Contractor will notify the Engineer to determine what course of action shall be taken.
8. The Contractor is responsible for gradually displacing upper layer(s) of soil reinforcement downward (15° maximum from horizontal) to avoid cutting soil reinforcement and conflicts with paving and subgrade preparation. The Contractor's attention is directed especially to situations where roadway superelevation and/or soil mixing are anticipated.
9. All exposed concrete surfaces will receive a Class 5 Applied Finish Coating in accordance with Specification Section 400. Refer to Typical Section on this sheet and the following notes for limits of applied finish:
   a. The inside, backside and top of Traffic Railings and Pedestrian/Bicycle Railings.
   b. Exposed surfaces of coping on top of retaining wall. Other coatings, colors or textures will be applied as required in the Wall Control Drawings.
10. For concrete facing panel surface treatment, see Wall Control Drawings. Extend surface treatment a minimum of 6" below final ground line.
11. Drive piles located within the soil volume prior to construction of the retaining wall, unless a method to protect the structure, acceptable to both the Engineer and Wall Company, is proposed and approved in writing. The portion of piles or drilled shafts extensions within the soil volume will be wrapped with polyethylene sheeting in accordance with Specification Section 459.
12. A structural extension of the connection of the retaining wall panel to soil reinforcement will be used whenever necessary to avoid cutting or excessive skewing (greater than 15°) of the soil reinforcement around obstructions (i.e., piles, pipes, manholes, drop inlets, etc.).
13. Steps in leveling pads will occur at MSE Wall panel interfaces. Panels will not cantilever more than 2" past the end of the upper tier leveling pad.
14. The top of the leveling pad or footing will be 2'-0" minimum below final ground line.
15. Top of leveling pad elevations shown in the Wall Control Drawings are maximum elevations. The constructed leveling pad elevations may be deeper based on the panel layout shown in the shop drawings.
16. The height of panels in the bottom course of MSE Walls must not be less than half the height of a standard panel.
17. Work this Index with Index 6100 & 6200 Series.

SHOP DRAWING REQUIREMENTS:

See Specification Section 548 for shop drawing requirements.

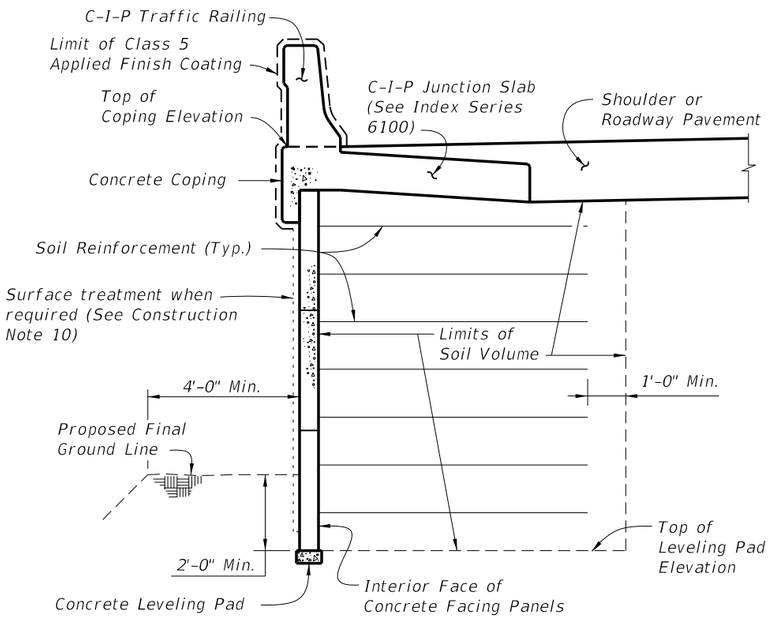

TYPICAL MSE RETAINING WALL SECTION
WITH A TRAFFIC RAILING
(Showing Limits of the Reinforced Soil Volume)

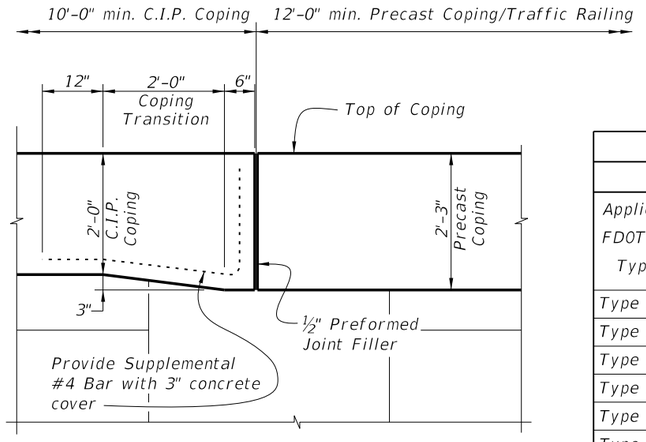

ELEVATION VIEW OF
COPING HEIGHT TRANSITION
(Railing Not Shown For Clarity)

FDOT MSE RETAINING WALL CLASSIFICATION TABLE

Durability Requirements					Other Allowable FDOT Wall Types					
Applicable FDOT Wall Type *	Concrete Cover (in.)	Concrete Class for Panels	Pozzolan Additions? **	Soil Reinforcement Type	2A	2B	2C	2D	2E	2F
Type 2A	2	II	No	Metal		✔	✔	✔	✔	✔
Type 2B	2	IV	No	Metal			✔	✔	✔	✔
Type 2C	3	IV	No	Metal				✔	✔	✔
Type 2D	3	IV	Yes	Metal					✔	✔
Type 2E	3	IV	No	Plastic						✔
Type 2F	3	IV	Yes	Plastic						

* See Data Table in Contract Plans.

** Silica fume, metakaolin or ultrafine fly ash.

6/28/2012 2:14:20 PM rd960rh C:\d\projects\standards\structures\2013book\06020-1of1.dgn

NOTES

SPECIFICATIONS:

1. General Specifications:
   The Florida Department of Transportation "Standard Specifications for Road and Bridge Construction", Current Edition and Supplements as Amended.
2. Design Specifications:
   a. Florida Department of Transportation (FDOT) "Structures Design Guidelines", Current Edition.
   b. American Association of State Highway and Transportation Officials (AASHTO) "LRFD Bridge Design Specifications", Current Edition.
   c. AASHTO-AGC-ARTBA Task Force 27 (Ground Modification Techniques), "Insitu Soil Improvement Techniques", January 1990.

DESIGN CRITERIA:

1. Design is based on the assumption that the material contained within the reinforced soil volume, methods of construction and quality of prefabricated materials are in accordance with Specification Section 548 and FDOT Structures Design Guidelines Section 3.13.2.
2. It is the responsibility of the Engineer to determine that the factored bearing pressure shown for the wall does not exceed the factored bearing resistance of the foundation for that specific wall location.
3. The Wall Company is responsible for internal stability of the wall. External stability design, including foundation and slope stability, is the responsibility of the Engineer.
4. If present, consider in design and analysis and locate manholes and drop inlets as shown on wall elevations.

SOIL PARAMETERS:

1. See wall control drawings for soil characteristics of foundation material to be used in the design of the wall system. The Contractor must provide soil design parameters for backfill material based on the actual soil characteristics utilized at the site. Provide the values of unit weight, cohesion and internal friction angle in the Shop Drawings.

MATERIALS:

1. Provide soil reinforcement in accordance with Specification Section 548.
2. For additional material notes, see Wall Company General Notes.

CONSTRUCTION:

1. Walls must be constructed in accordance with Specification Section 548 and the Wall Company's instructions.
2. For location and alignment of retaining walls, see Wall Control Drawings.
3. Refer to Plan and Elevation sheets of individual walls for minimum reinforcement strip/mesh length, factored bearing resistance's, minimum wall embedment and anticipated long term and differential settlements.
4. If existing or future structures, pipes, foundations or guardrail posts within the reinforced soil volume interfere with the normal placement of soil reinforcement and specific directions have not been provided on the plans, the Contractor must notify the Engineer to determine what course of action should be taken.
5. The Contractor is responsible for gradually deflecting upper layer(s) of soil reinforcement downward (15° maximum from horizontal) to avoid cutting soil reinforcement and conflicts with paving and subgrade preparation. The Contractor's attention is directed especially to situations where roadway superelevation and/or soil mixing are anticipated.

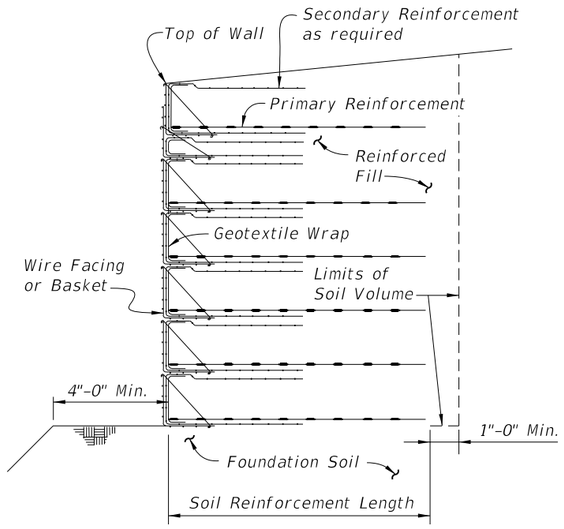

TYPICAL RETAINING WALL SECTION
(Showing Limits of the Reinforced Soil Volume)

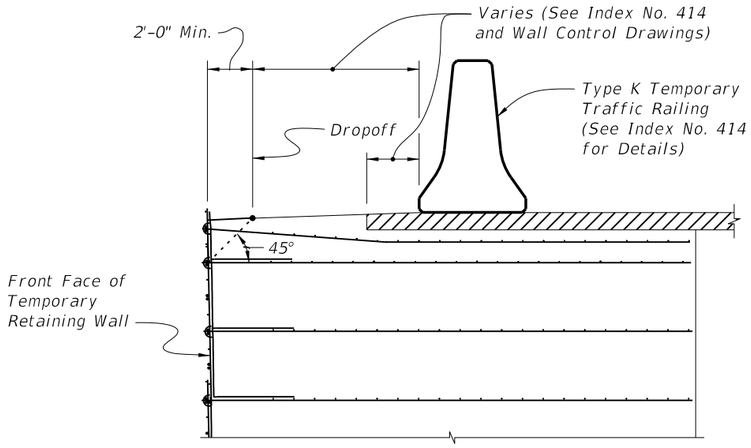

TEMPORARY TRAFFIC RAILING
PLACEMENT DETAIL

GENERAL NOTES AND DETAILS

C:\d\projects\standards\structures\2013book\06030-1of1.dgn rd960rh 2:14:23 PM 6/28/2012

LAST REVISION	REVISION	DESCRIPTION:				
01/01/11			FDOT DESIGN STANDARDS 2013	TEMPORARY MSE RETAINING WALL SYSTEMS	INDEX NO. 6030	SHEET NO. 1

CROSS REFERENCES:
For Dimensions L and X see Sheet
Pile Wall Data Table in Structures Plans.

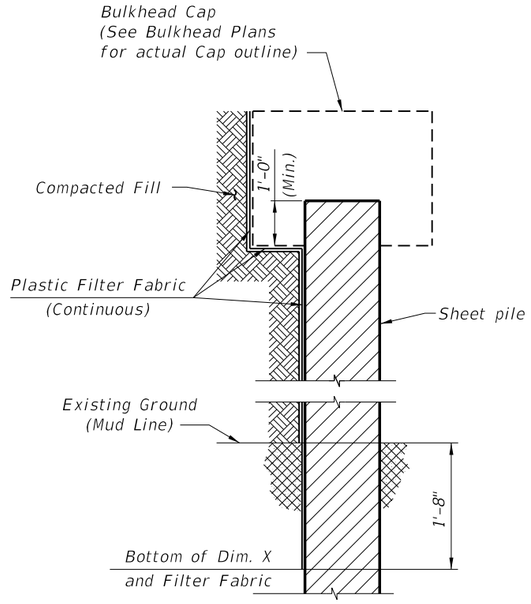

SECTION THRU BULKHEAD
(Showing Plastic Filter Fabric)

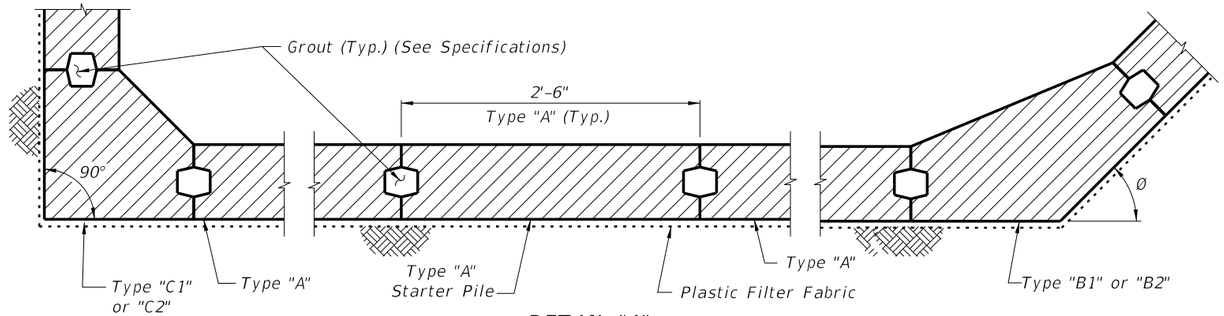

DETAIL "A"
(Cap and Anchoring System Not Shown)
(Section Taken Above Dimension X)

NOTE: Detail "A" shows a Part-Plan View of an assumed bulkhead.
See Bulkhead plans for actual Plan View.

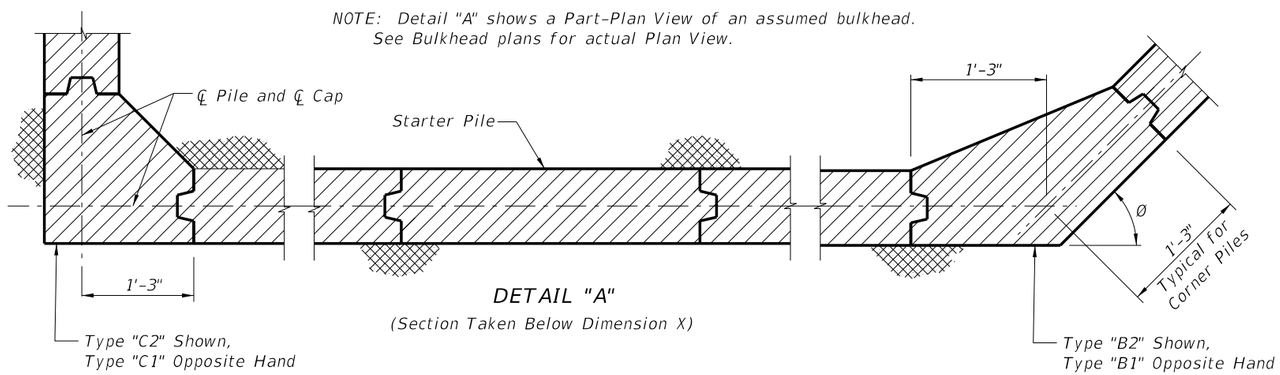

DETAIL "A"
(Section Taken Below Dimension X)

SHEET PILE DESIGN CRITERIA AND NOTES

DESCRIPTION:
This Design Standard includes details for five types of piles with two thicknesses. Types "B1", "B2", "C1" and "C2" piles (corner piles) are of reinforced concrete construction, and Type "A" is of prestressed concrete construction. The piles shall be manufactured, cured and installed in accordance with the requirements of the contract documents.

MATERIALS: (for materials not listed refer to the Specifications)
CONCRETE

Class:	V (Special) for slightly and moderately aggressive environments V (Special w/ Silica Fume) for extremely aggressive environment
Unit weight:	150 pcf
Modulus of Elasticity:	Based on the use of Florida limerock concrete

REINFORCING STEEL
ASTM A615 Grade 60

PRESTRESSING STEEL
ASTM A416 Grade 270 (Low-Relaxation Strand)

DESIGN PARAMETERS:
Type "A"

Concrete Compressive Strength at release of prestressing:	4000 psi minimum
Uniform compression after prestressing losses:	1000 psi minimum
Pick-up, Storage and Transportation:	0.0 psi tension with 1.5 times pile self weight

Types "B1", "B2", "C1" & "C2"
Pick-up, Storage and Transportation: Minimum compressive strength f'ci ≥ 4000 psi required.

ENVIRONMENT:
The pile designs are applicable to all Environments.

PLASTIC FILTER FABRIC:
The plastic filter fabric shall extend to the bottom of the "X" dimension.

PILE PICK-UP AND HANDLING:
Type "A"
Pick-up of pile may be either a single point pick-up or a two point pick-up as shown below.
Types "B1", "B2", "C1" & "C2"
Two point pick-up for lifting out of forms & two point support for storage & transportation.
Single point pick-up for installation only.

PILE FIT-UP:
The 2'-6" Sheet Pile dimension is nominal. This dimension may be shortened by the Manufacturer up to ½" to allow for Sheet Pile fit-up in its final position. Minimum Sheet Pile width is 2'-5½". No changes shall be made to the tongues or grooves.

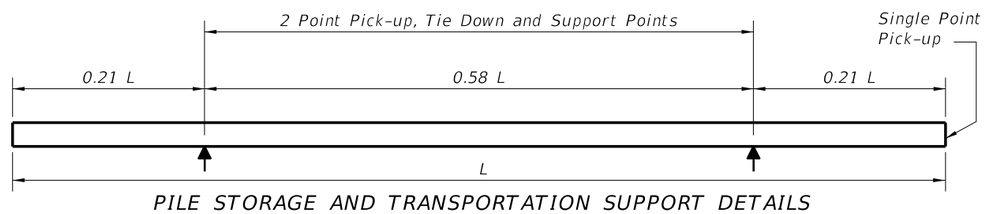

PILE STORAGE AND TRANSPORTATION SUPPORT DETAILS

NOTES AND DETAILS

LAST REVISION	REVISION	DESCRIPTION:			INDEX NO.	SHEET NO.
07/01/12			FDOT DESIGN STANDARDS 2013	PRECAST CONCRETE SHEET PILE WALL	6040	1

C:\d\projects\standards\structures\2013book\06040-1of4.dgn rd960rh 2:14:25 PM 6/28/2012

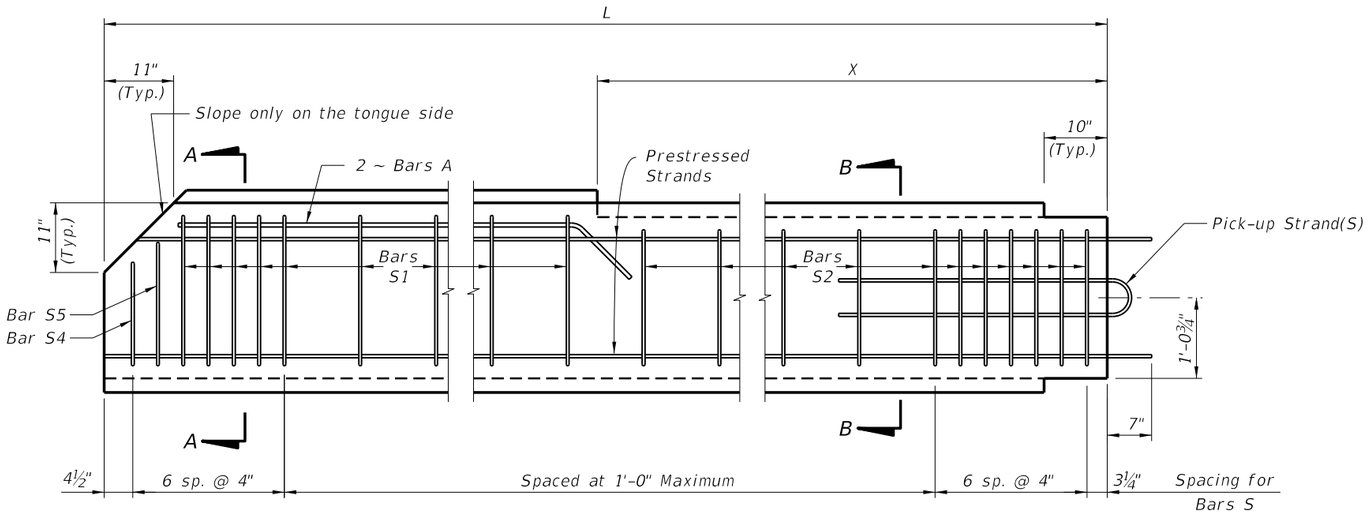

TYPICAL PILE

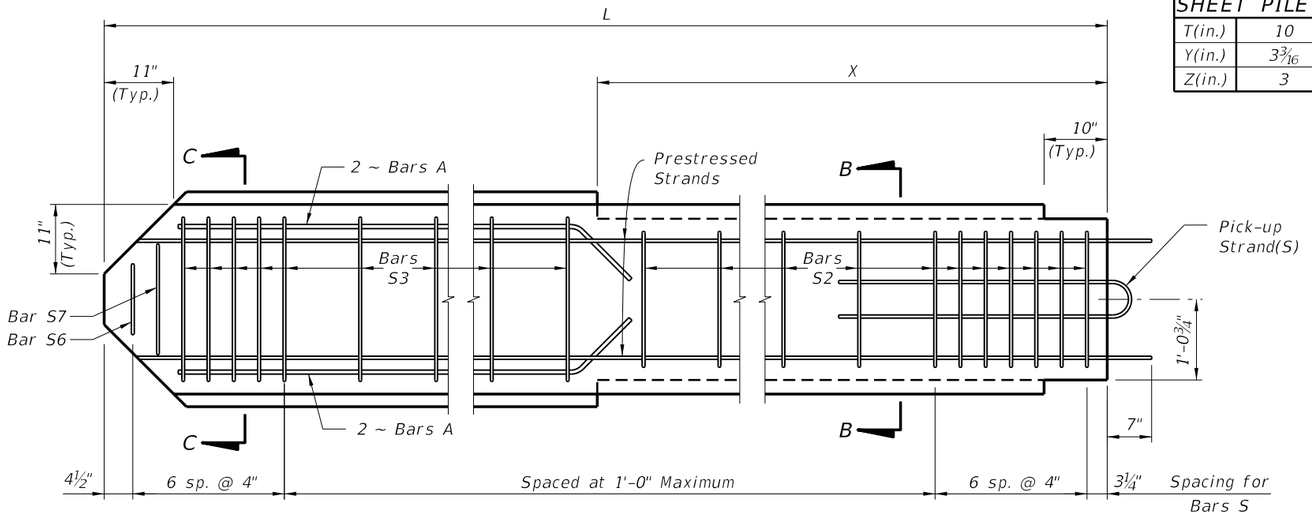

STARTER PILE

Wall Thickness	STRAND DIA. (in.)	MAXIMUM L	n	D (in.)	TOTAL # OF STRANDS	SECTION MODULUS (in.³)	* STRESS (psi)
T=10 in.	0.5	28'-0"	6	3¼	14	500	1150
	0.6	27'-0"	4	5	10	500	1160
T=12 in.	0.5	31'-0"	7	2⅞	16	720	1100
	0.6	30'-0"	5	4	12	720	1160

* Unit Prestress after losses.

SHEET PILE DIMENSIONS		
T(in.)	10	12
Y(in.)	3 3/16	4 3/16
Z(in.)	3	4

BAR BENDING DIAGRAMS

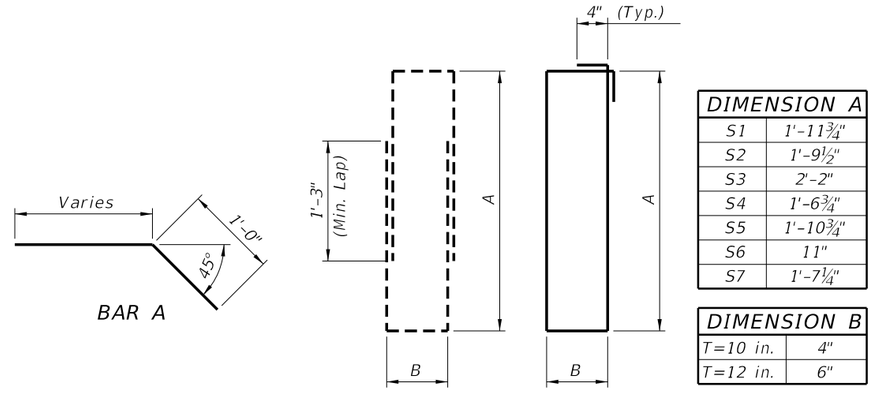

DIMENSION A	
S1	1'-11¾"
S2	1'-9½"
S3	2'-2"
S4	1'-6¾"
S5	1'-10¾"
S6	11"
S7	1'-7¼"

DIMENSION B	
T=10 in.	4"
T=12 in.	6"

NOTES:
1. Intermediate Prestress Strands not shown in Elevations and Sections.
2. All bar dimensions are out-to-out.
3. Bars A are #5 and Bars S are #4.
4. At the Contractor's option Bars S may be fabricated as a two piece bar as shown in the Bar Bending Diagram.
5. The Contractor may use Deformed Welded Wire Reinforcement conforming to specification ASTM A497 in lieu of Bars A and Bars S if the wire size and spacing provide the same area of reinforcing steel per foot as the Bars shown.
6. For Dimensions L and X see Sheet Pile Data Table in Structures Plans.

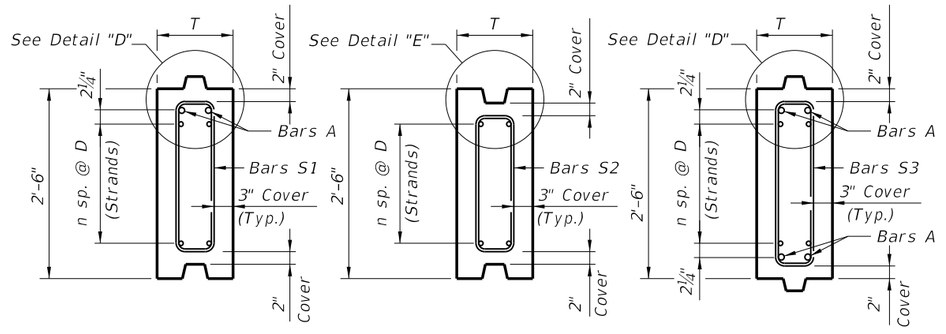

SECTION A-A SECTION B-B SECTION C-C

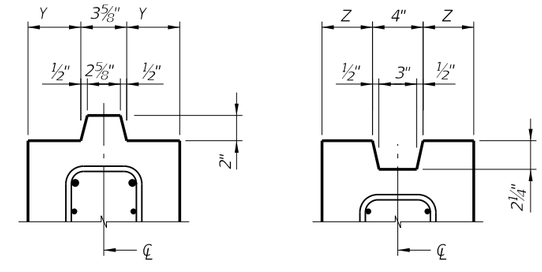

TYPE "A" STANDARD SECTION

C:\d\projects\standards\structures\2013book\06040-2of4.dgn rd960rh 2:14:28 PM 6/28/2012

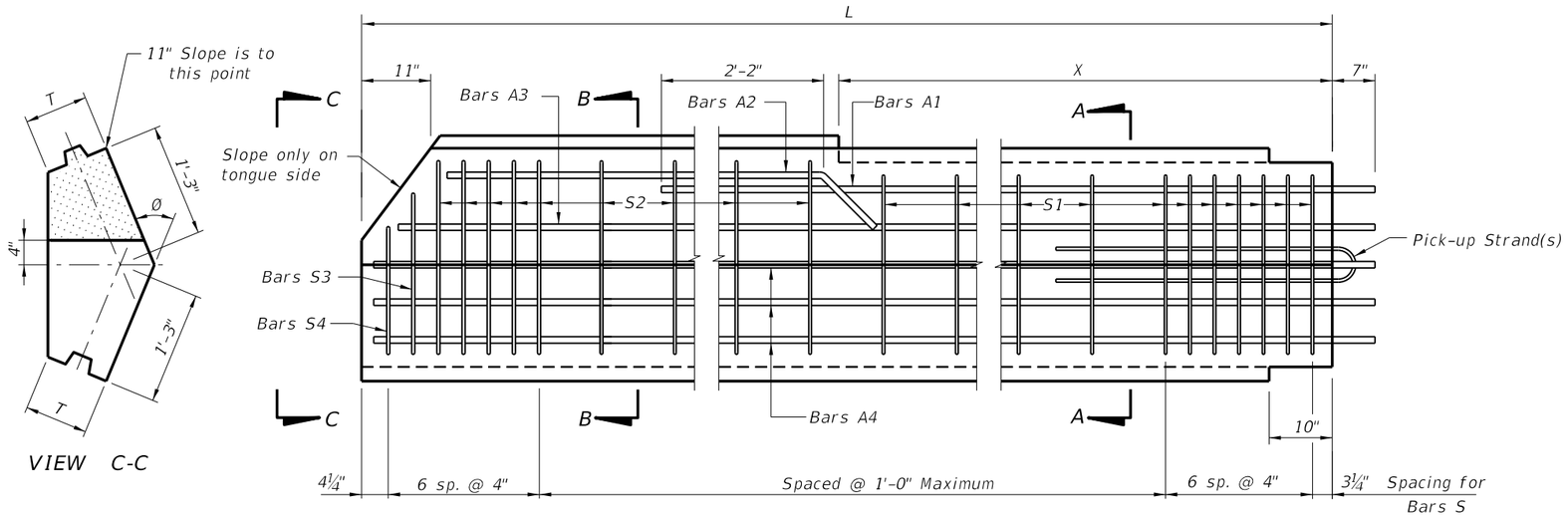

ELEVATION
(TYPE "B1" PILE SHOWN, TYPE "B2" PILE OPPOSITE HAND)

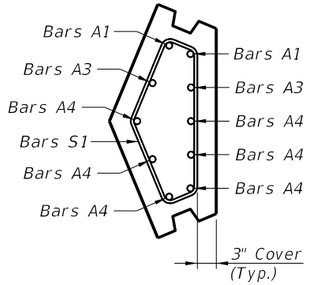

SECTION A-A

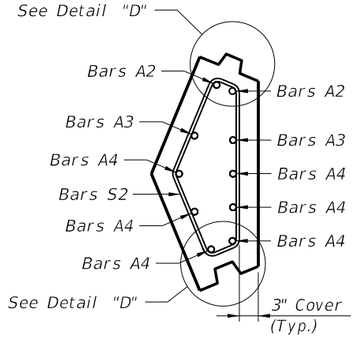

SECTION B-B

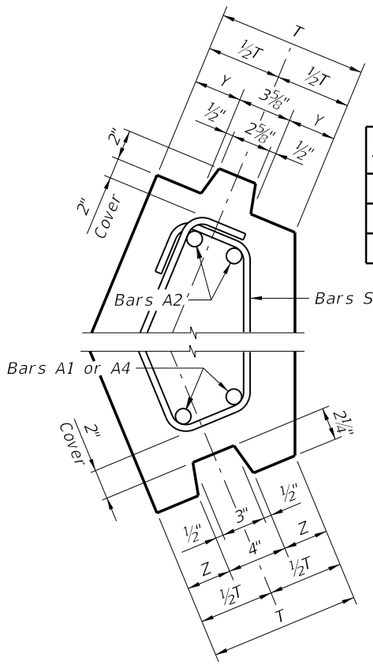

DETAIL "D"
(TYPE "B1" PILE SHOWN, TYPE "B2" PILE OPPOSITE HAND)

SHEET PILE DIMENSIONS		
T (in.)	10	12
Y (in.)	3 3/16	4 3/16
Z (in.)	3	4

BAR BENDING DIAGRAMS

STIRRUP DIMENSIONS (T = 10")

Ø	BAR MARK	R1	R2	R3	R4	R5	R6	R7	R8
30°	S1	11¼"	9¾"	1'-6½"	2½"	5"	4¾"	5½"	4¼"
	S2	1'-1½"	9¾"	1'-8¾"	2½"	4½"	5½"	5¾"	4¼"
	S3	11¼"	8"	1'-6"	1¼"	5"	4½"	4½"	5"
	S4	11¼"	4¼"	1'-1¾"	1¾"	5"	3¾"	2½"	6¼"
45°	S1	11½"	8"	1'-4"	4"	5½"	6½"	8"	4"
	S2	1'-1¾"	8"	1'-5¾"	4"	4½"	7½"	8"	4"
	S3	11½"	6¾"	1'-4"	2¼"	5½"	6¾"	6¾"	5½"
	S4	11½"	3½"	1'-0"	3"	5½"	5"	3½"	7"
60°	S1	1'-0"	6"	1'-0¾"	5¼"	6"	7¼"	10¼"	3"
	S2	1'-2"	6"	1'-2¾"	5¼"	4¾"	8¾"	10½"	3"
	S3	1'-0"	4¾"	1'-1½"	3¼"	6"	8"	8¾"	5¼"
	S4	1'-0"	2½"	10"	4½"	6"	5¾"	4"	7½"

STIRRUP DIMENSIONS (T = 12")

Ø	BAR MARK	R1	R2	R3	R4	R5	R6	R7	R8
30°	S1	11½"	10"	1'-6"	3½"	7"	4¾"	5¾"	6"
	S2	1'-1¾"	10"	1'-8¼"	3½"	6½"	5¼"	5¾"	6"
	S3	11½"	8¼"	1'-5¾"	2"	7"	4¾"	4½"	7¼"
	S4	11½"	4"	1'-1¼"	2¼"	7"	3¾"	2½"	8¼"
45°	S1	1'-0"	8½"	1'-3¼"	5¼"	7½"	6¼"	8½"	5¼"
	S2	1'-2¼"	8½"	1'-5½"	5¼"	6½"	7¼"	8½"	5¼"
	S3	1'-0"	7"	1'-4"	3"	7½"	6¾"	7"	7¼"
	S4	1'-0"	3½"	11¾"	3¾"	7½"	5"	3½"	9"
60°	S1	1'-0½"	6¼"	11¾"	7"	8"	6¾"	10¾"	4"
	S2	1'-2¾"	6¼"	1'-2"	7"	6¾"	8"	10¾"	4"
	S3	1'-0½"	5"	1'-1½"	4"	8"	8"	9"	7"
	S4	1'-0½"	2½"	9½"	5½"	8"	5½"	4¼"	9¼"

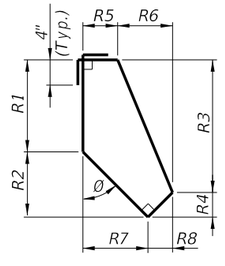

1 - PIECE
BARS S1 & S2

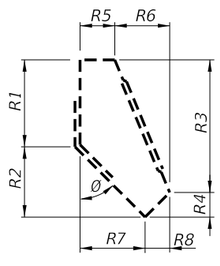

2 - PIECE

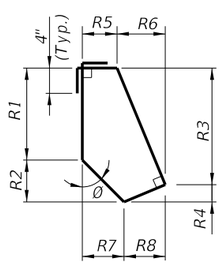

BARS S3 & S4

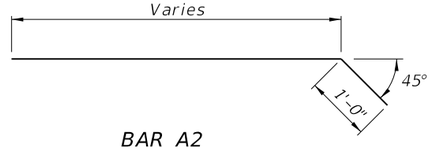

BAR A2

NOTES:
1. This drawing includes details for precast concrete corner piles for 10" and 12" thick sheet pile systems. The details apply equally to both thicknesses.
2. The bar configurations shown in Sections A-A and B-B shall be used for Ø angles between 15° and 75°. For Ø angles not shown, the reinforcing bar dimensions may be interpolated or extrapolated from the stirrup dimensions shown.
3. All bar dimensions are out-to-out.
4. Bars A are #8 and Bars S are #4.
5. Values for Stirrup Dimensions are shown for Ø equal to 30°, 45° & 60° only.
6. At the Contractor's option Bars S may be fabricated as a 2 piece bar with a minimum lap length of 1'-6", as shown in Bar Bending Diagrams.
7. If Type "B1" or "B2" pile is used as a Starter Pile show tongue on both sides of pile from Dim. X down. Show dimensions for Bars S2, S3 & S4 in shop drawings.
8. If tongue must be on the opposite side from that shown all dimensions and Bars A, S2, S3 and S4 will be the same but opposite hand.
9. For Dimensions L, X and Angle Ø, see Sheet Pile Data Table in Structures Plans.

TYPE "B1" AND "B2" - VARIABLE ANGLE CORNER PILE

C:\d\projects\standards\structures\2013book\06040-3of4.dgn
rd960rh
2:14:30 PM
6/28/2012

LAST REVISION	REVISION	DESCRIPTION:	FDOT DESIGN STANDARDS 2013	PRECAST CONCRETE SHEET PILE WALL	INDEX NO.	SHEET NO.
07/01/12					6040	3

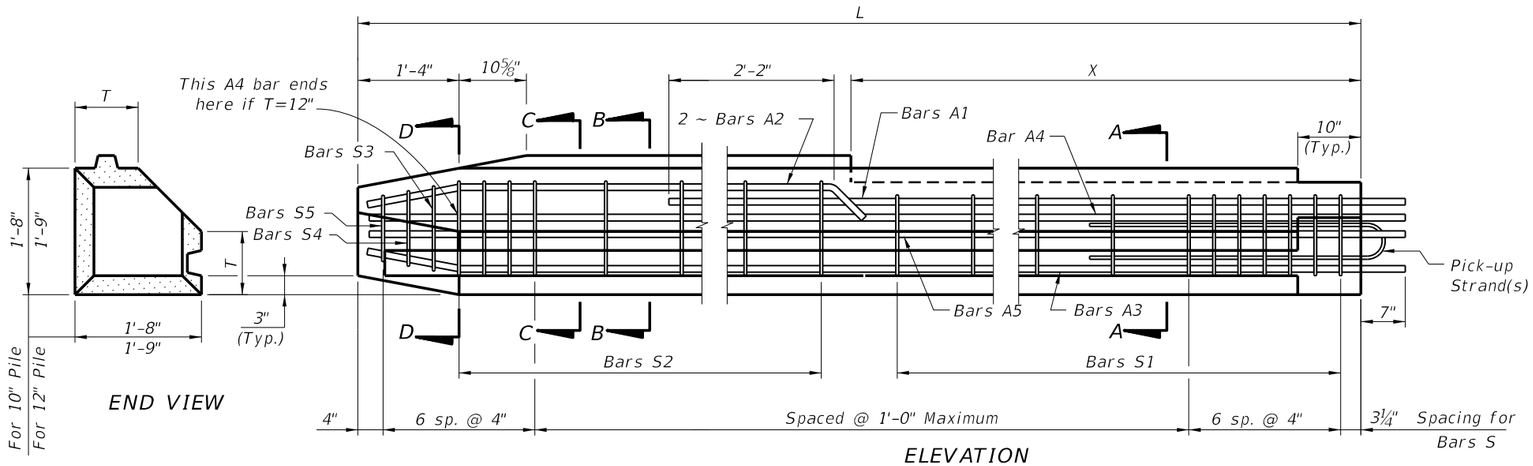

END VIEW

ELEVATION
(TYPE "C1" PILE SHOWN, TYPE "C2" PILE OPPOSITE HAND)

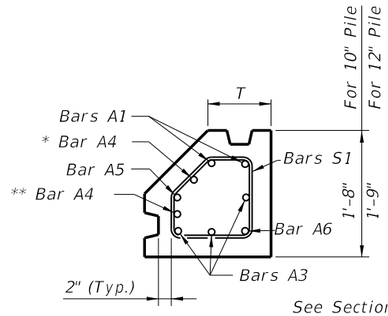

SECTION A-A

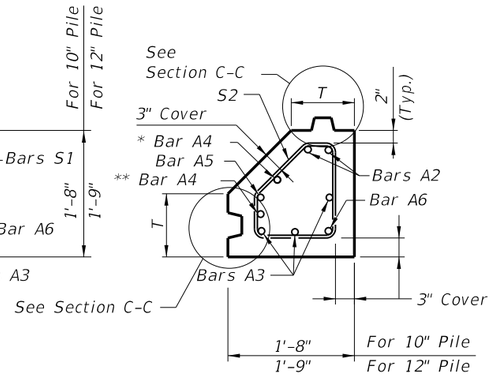

SECTION B-B

* This Bar A4 shall be 1'-2" shorter than other A4 bars for T = 12".

** This Bar A4 (not shown in elevation) is included only if T = 12".

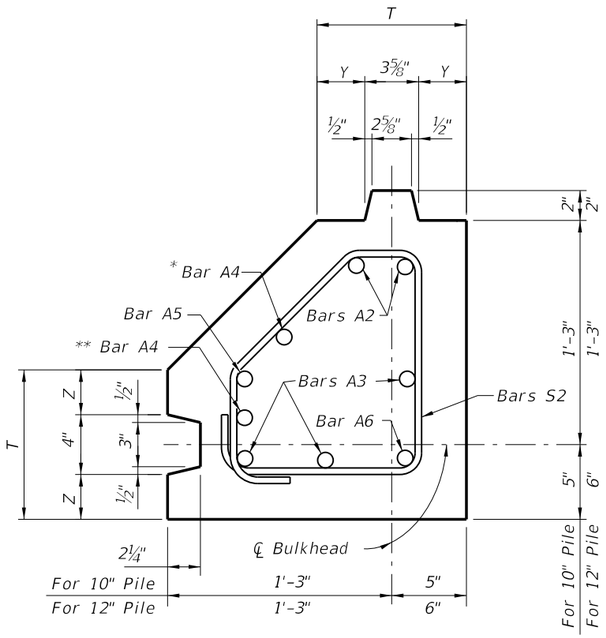

SECTION C-C (T=10" or 12")

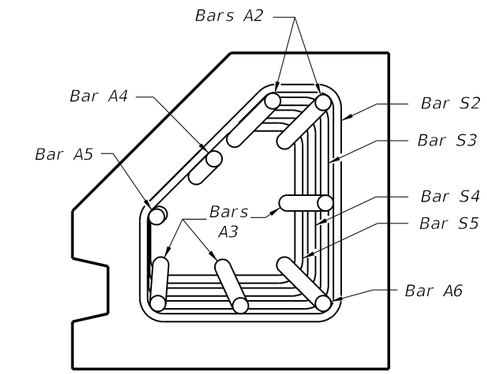

SECTION D-D (T=10")

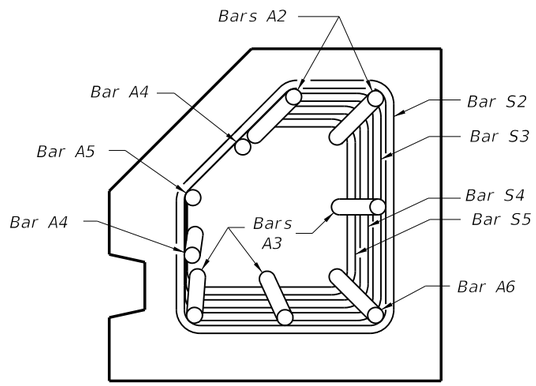

SECTION D-D (T=12")

STIRRUP DIMENSIONS

θ	T (in.)	BAR MARK	R1	R2	R3
90°	10	S1	7"	5¾"	7"
		S2	7"	8"	4¾"
		S3	6¼"	7¼"	4¾"
		S4	5½"	6½"	4¾"
		S5	4¾"	5¾"	4¾"
	12	S1	9"	4¾"	9"
		S2	9"	7"	6¾"
		S3	8¼"	6¼"	6¾"
		S4	7½"	5½"	6¾"
		S5	6¾"	4¾"	6¾"

SHEET PILE DIMENSIONS

T (in.)	10	12
Y (in.)	3 3/16	4 3/16
Z (in.)	3	4

BAR BENDING DIAGRAMS

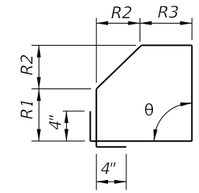

STIRRUPS S

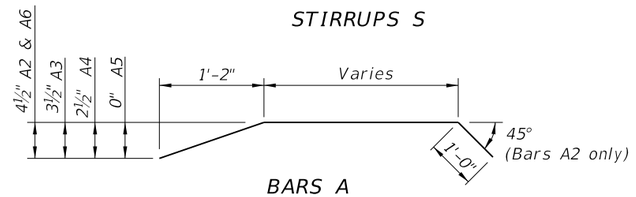

BARS A

Note: All Bar dimensions are out-to-out.

NOTES:
1. All bar dimensions are out-to-out.
2. Bars A are #8 and Bars S are #4.
3. This drawing includes information for precast Corner Piles for 10" and 12" thick Sheet Pile systems. The details apply to both thicknesses but the bar configurations change slightly according to the thickness values used.
4. If Type "C1" or "C2" pile is used as a Starter Pile show tongue on both sides of pile from Dim. X down. Show dimensions for Bars S2, S3, S4 & S5 in shop drawings.
5. If tongue must be on opposite side (Groove Side) from that shown, all dimensions and reinforcement shall follow the corresponding Tongue or Groove side.
6. For Dimensions L and X see Sheet Pile Data Table in Structures Plans.

TYPE "C1" AND "C2" - RIGHT ANGLE CORNER PILE

C:\9_projects\standards\structures\2013book\06040-4of4.dgn
rd960rh
2:14:32 PM
6/28/2012

LAST REVISION	REVISION	DESCRIPTION:			INDEX NO.	SHEET NO.
07/01/12			FDOT DESIGN STANDARDS 2013	PRECAST CONCRETE SHEET PILE WALL	6040	4

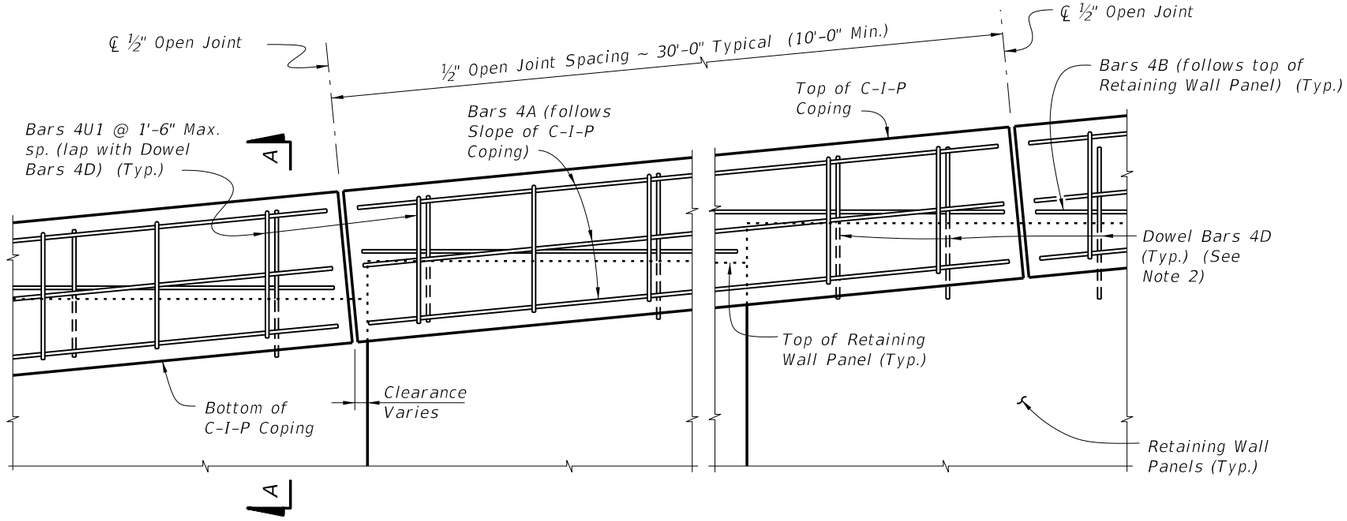

C-I-P COPING - PARTIAL ELEVATION VIEW

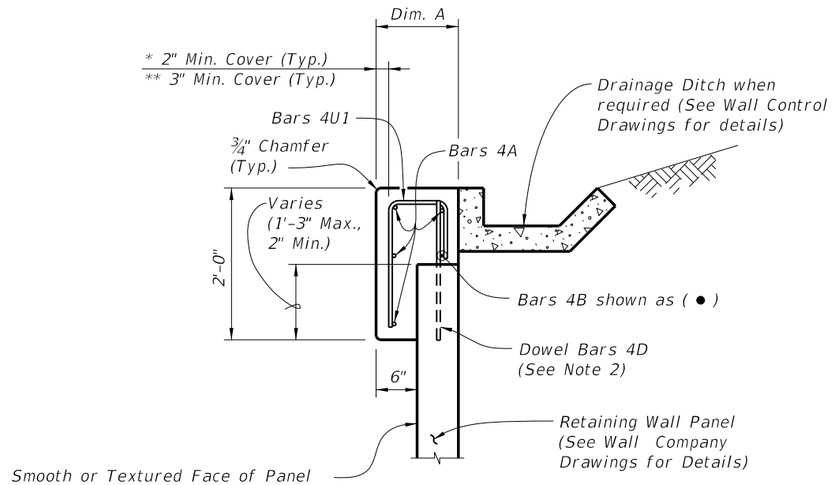

SECTION A-A
C-I-P COPING

Dim. A	Panel width + 6"
Dim. B	Panel width + 1'-0" Min.

PRECAST AND C-I-P COPING NOTES:

1. *Provide Class II concrete for slightly aggressive environments or Class IV for moderately or extremely aggressive environments.*
2. *Dowel Bars 4D extend 1'-0" above the top of retaining wall panel. Field cut as necessary to maintain 2" minimum cover. See Wall Company Drawings for number and spacing of Dowel Bars 4D.*
3. *Payment for Dowel Bars 4D, Buildup Concrete and Coping will be made under Retaining Wall System (Permanent).*

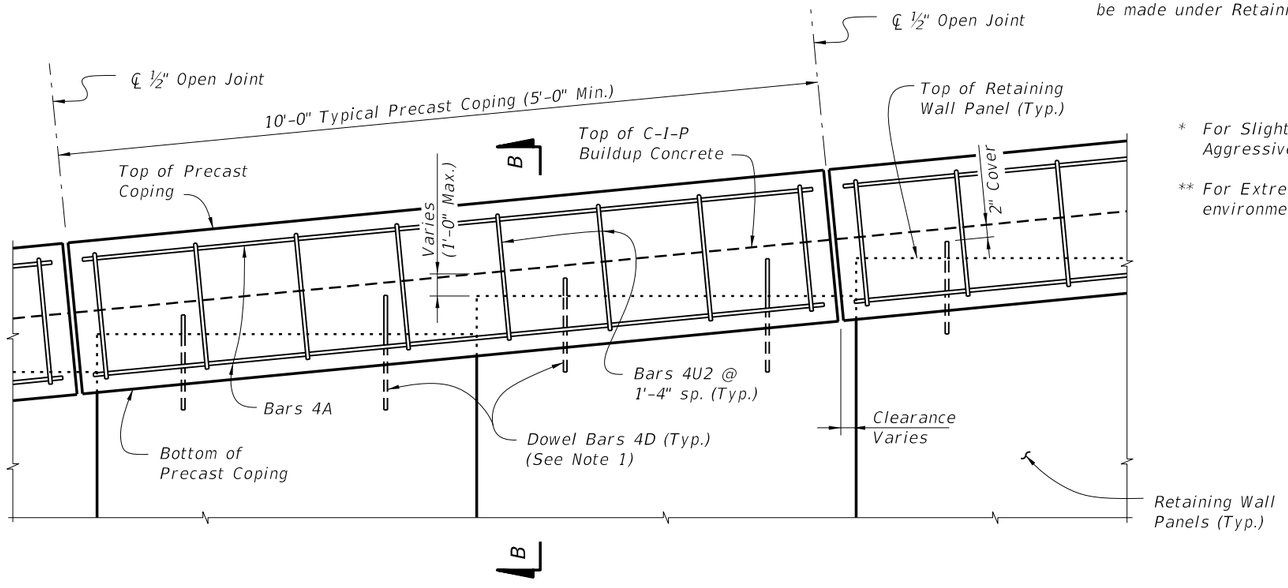

PRECAST COPING - PARTIAL ELEVATION VIEW

* For Slightly and Moderately Aggressive environments

** For Extremely Aggressive environments.

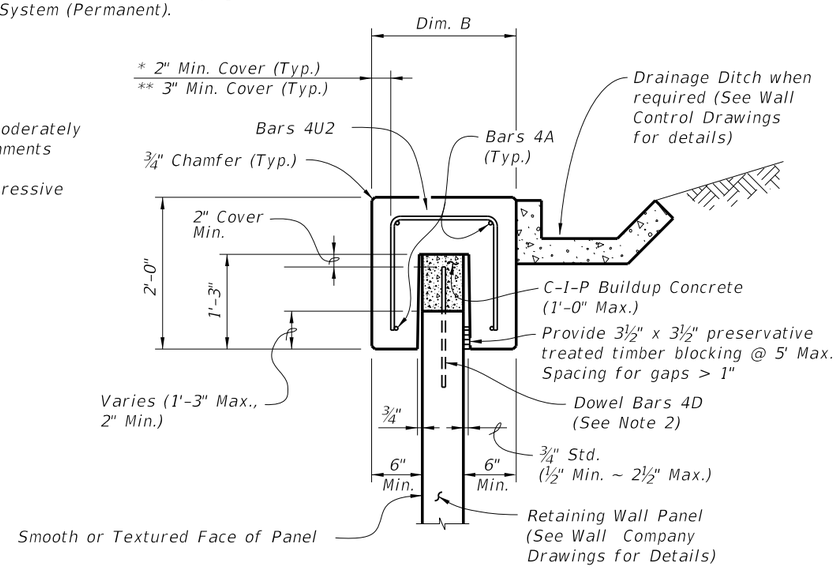

SECTION B-B
PRECAST COPING

C:\d\projects\standards\structures\2013book\06100-1of2.dgn
rd960rh
2:14:35 PM
6/28/2012

LAST REVISION	REVISION	DESCRIPTION:				
01/01/12			FDOT DESIGN STANDARDS 2013	MSE WALL COPING (PRECAST OR C-I-P)	INDEX NO. 6100	SHEET NO. 1

REINFORCING STEEL BENDING DIAGRAMS - PRECAST AND C-I-P COPINGS

BILL OF REINFORCING STEEL

MARK	SIZE	LENGTH * S or M	LENGTH * E
A	4	AS REQD.	AS REQD.
B	4	AS REQD.	AS REQD.
D	4	2'-0"	2'-0"
U1	4	Panel width + 4"	Panel width + 3"
U2	4	Panel width + 8"	Panel width + 6"
U3	4	Panel width + 4"	Panel width + 3"

REINFORCING STEEL NOTES:

1. All bar dimensions in the bending diagrams are out to out.
2. All reinforcing steel at the open joints will have a 2" minimum cover.
3. Bars 4A may be continuous or spliced at the construction joints. Lap splices for Bars 4A will be a minimum of 1'-8".
4. The Contractor may use Welded Wire Reinforcement when approved by the Engineer. Welded Wire Reinforcement will conform to ASTM A 497.

* S = Slightly Aggressive
M = Moderately Aggressive
E = Extremely Aggressive

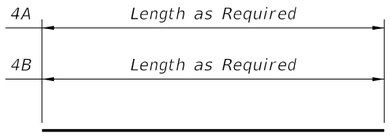

BARS 4A & 4B

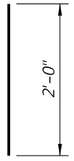

DOWEL BAR 4D

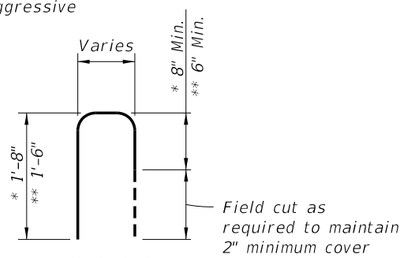

BAR 4U1

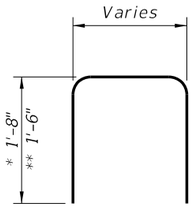

BAR 4U2

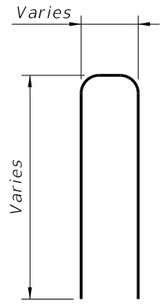

BAR 4U3

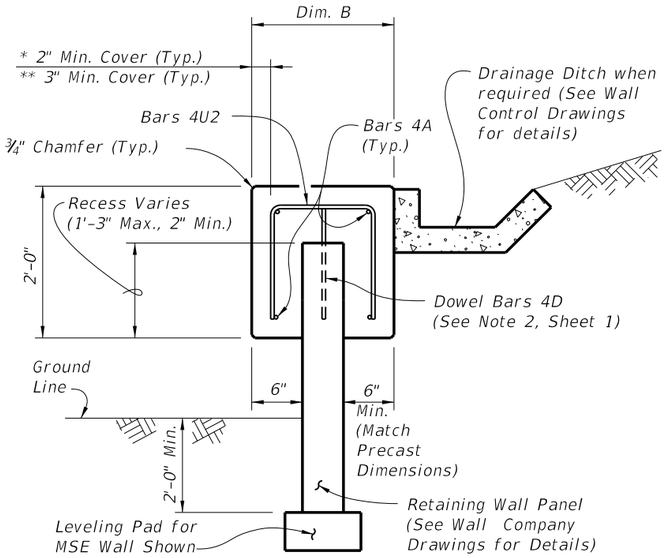

C-I-P COPING USED WITH PRECAST COPING

Note: When precast coping units do not fit the entire length of the retaining wall, use this similar C-I-P coping for short portions between precast coping units. This C-I-P coping may also be used for vertical copings.

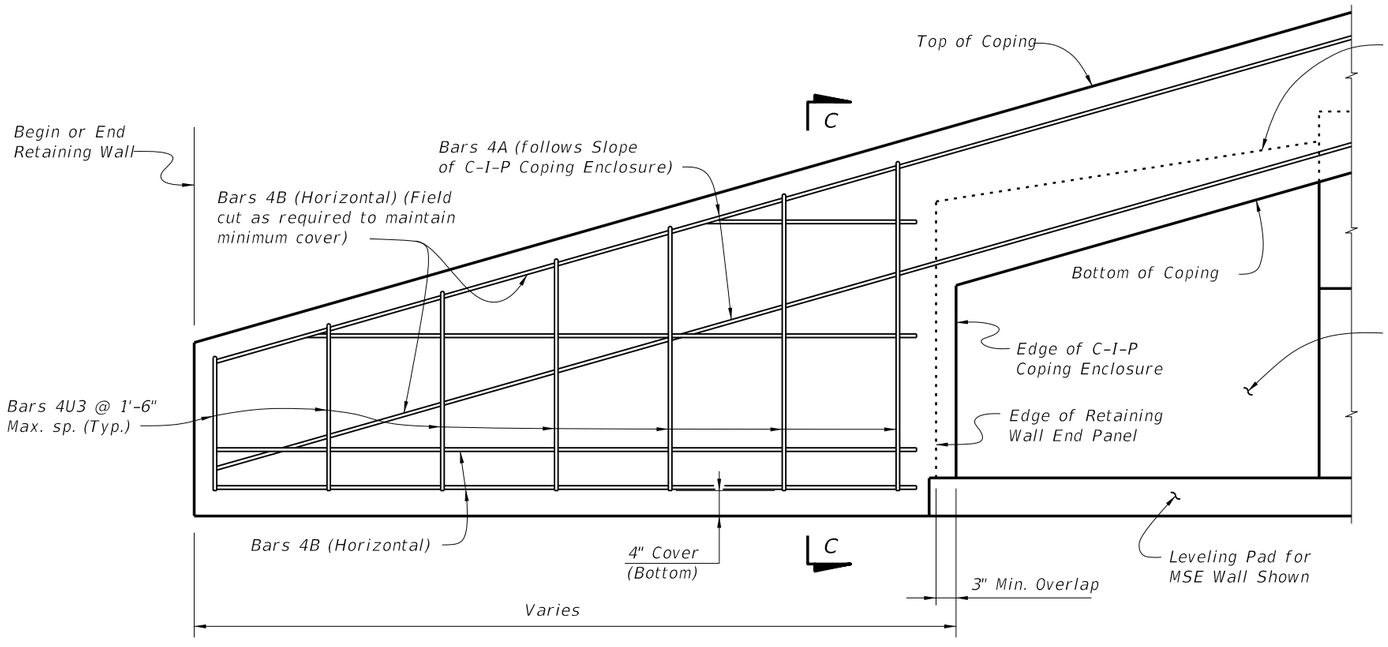

C-I-P COPING ENCLOSURE DETAIL

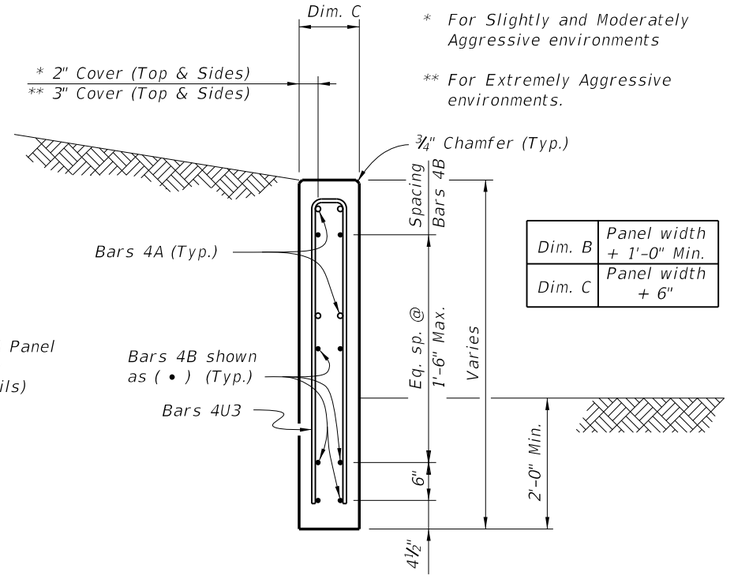

* For Slightly and Moderately Aggressive environments

** For Extremely Aggressive environments.

Dim. B	Panel width + 1'-0" Min.
Dim. C	Panel width + 6"

SECTION C-C

C:\d\projects\standards\structures\2013book\06100-2of2.dgn
rd960rh
2:14:37 PM
6/28/2012

LAST REVISION	REVISION	DESCRIPTION:				
01/01/12			FDOT DESIGN STANDARDS 2013	MSE WALL COPING (PRECAST OR C-I-P)	INDEX NO. 6100	SHEET NO. 2

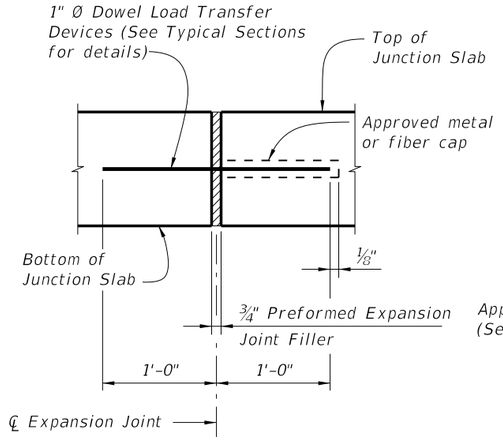

EXPANSION JOINT DETAIL

(Junction Slab expansion joints are to coincide with ¾" open joints in Traffic Railing)

CROSS REFERENCE: For Detail "A", see Sheet 2.

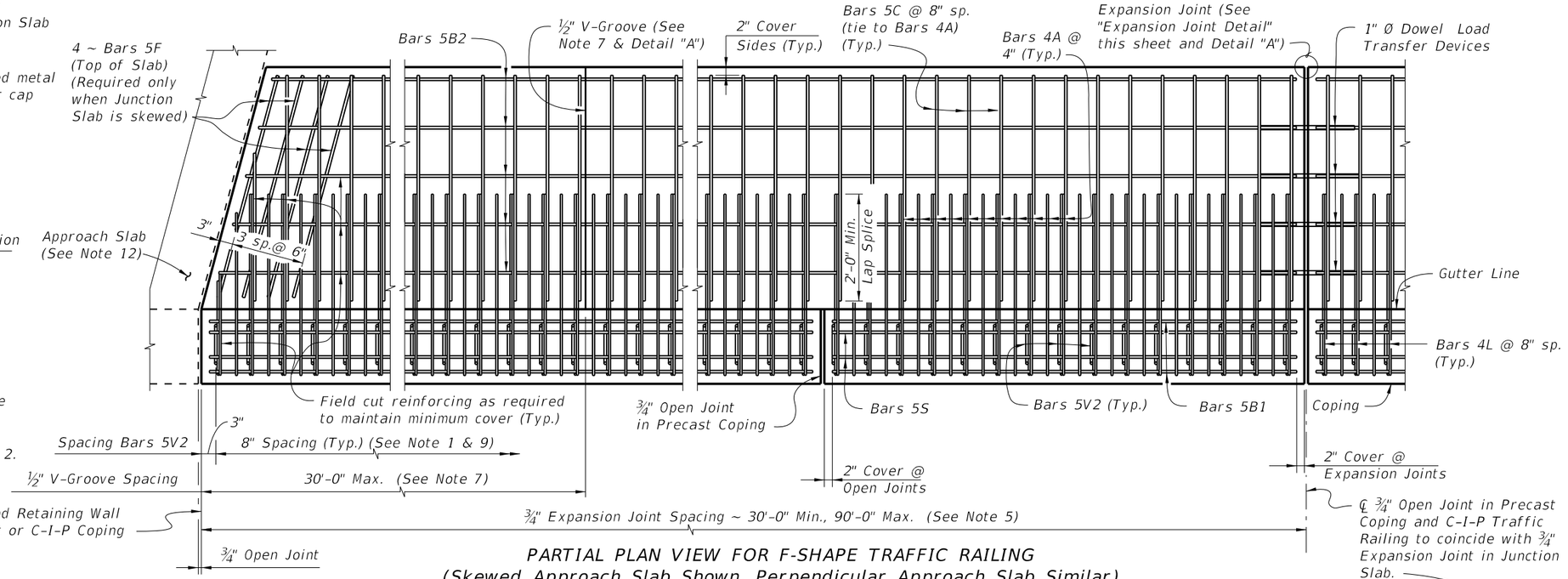

PARTIAL PLAN VIEW FOR F-SHAPE TRAFFIC RAILING
(Skewed Approach Slab Shown, Perpendicular Approach Slab Similar)
(Precast Coping Shown, C-I-P Coping Similar) (Traffic Railing not Shown for Clarity)

JUNCTION SLAB NOTES:

1. APPLICATIONS: This junction slab is only applicable for a TL-4 crash test rating. For TL-5 crash test rating increase Expansion Joint Spacing to 60'-0" minimum and provide Bars 5C at 6" max. spacing within 6'-0" of Open Joints for precast coping with the 42" F-Shape Traffic Railing.
2. CONSTRUCTION REQUIREMENTS: Construct the Junction Slab level transversely and expansion joints plumb; do not construct the junction slab or C-I-P coping perpendicular to the roadway surface. Slip forming of Coping and/or junction slab is not permitted.
3. Provide Class II concrete for slightly aggressive environments or Class IV for moderate or extremely aggressive environments.
4. Dowel Load Transfer Devices will be ASTM A 36 smooth round bar and hot-dip galvanized in accordance with Specification Section 962. Install Dowel Load Transfer Devices in accordance with Specification Section 350.
5. Construct ¾" Expansion Joints in junction slabs and C-I-P copings plumb and perpendicular or radial to the Gutter Line. Provide at 90'-0" maximum intervals as shown. Provide 3"x3" Mortar plugs in open joints at the base of traffic railings to contain runoff.
6. Provide and install Preformed Expansion Joint Filler in accordance with Specification Section 932.
7. Construct ½" V-Grooves in junction slabs and C-I-P copings plumb and provide at 30'-0" maximum intervals as shown. Space V-Grooves equally between ¾" Expansion Joints and/or Begin or End Junction Slab. V-Groove locations are to coincide with V-Groove locations in the Traffic Railing.
8. Shoulder or Roadway Pavement is required on top of the junction slab for its entire length on the traffic side of the Traffic Railing. See Typical Sections on Sheet Nos. 2 and 3 for details.
9. Spacing shown is along the Gutter Line.
10. On MSE Walls provide, Dowel Bars 4D and extend to 7" above the top of retaining wall panel. Field cut as necessary to maintain 2" minimum cover to the top of the buildup concrete. See Wall Company Drawings for number and spacing of Dowel Bars 4D.
11. Work this Index with the following:
    Index No. 420 – Traffic Railing – (32" F-Shape)
    Index No. 425 – Traffic Railing – (42" F-Shape).
12. The following Indexes contain details of the intersection of the retaining wall at approach slabs:
    Index No. 20900 – Approach Slabs (Flexible Pavement Approaches)
    Index No. 20910 – Approach Slabs (Rigid Pavement Approaches)

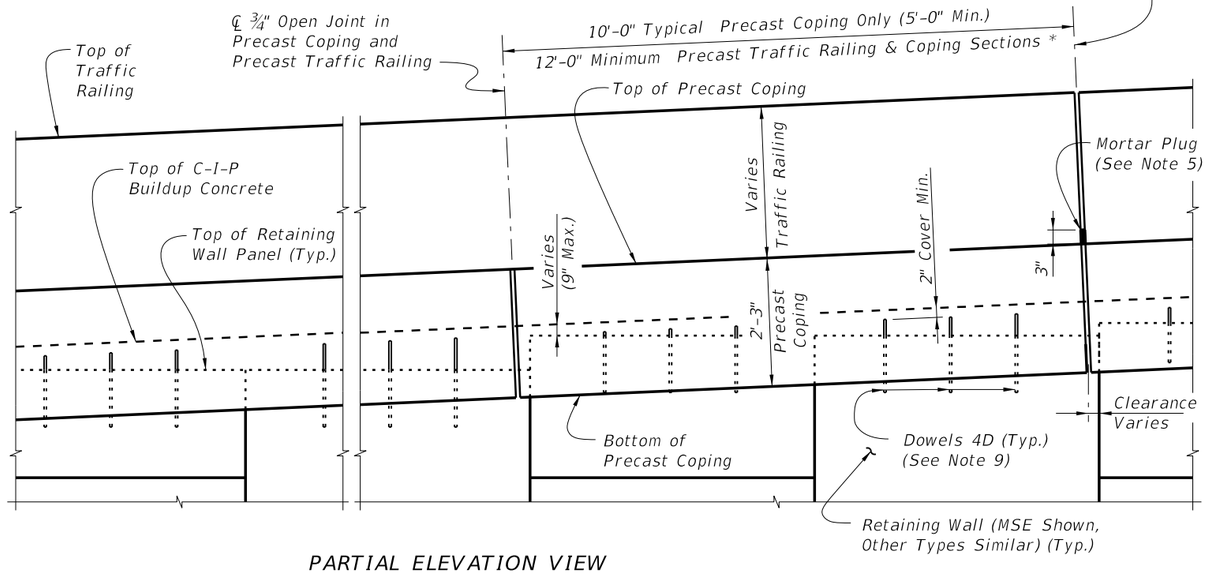

PARTIAL ELEVATION VIEW
(Precast Coping and Junction Slab Reinforcing not Shown for Clarity)
(Precast Coping Shown, C-I-P Coping Similar)

* C-I-P End Section must be ≥ 12'-0".

6/28/2012 2:14:39 PM rd960rh C:\d\projects\standards\structures\2013book\06110-1of6.dgn

LAST REVISION	REVISION	DESCRIPTION:				
01/01/12			FDOT DESIGN STANDARDS 2013	WALL COPING WITH TRAFFIC RAILING/JUNCTION SLAB	INDEX NO. 6110	SHEET NO. 1

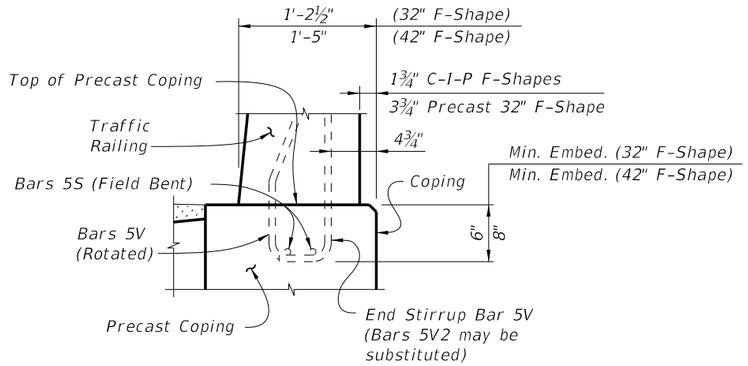

PARTIAL END VIEW OF TRAFFIC RAILING END TRANSITION FOR GUARDRAIL ATTACHMENT (Showing Bars 5V and Bars 5S) (Precast Coping Shown, C-I-P Coping Similar)

NOTE: See Index No. 420 and Index No. 425, Detail "A" for details.

ESTIMATED QUANTITIES FOR PRECAST COPING		
ITEM	UNIT	QUANTITY
Concrete (Precast Coping Only)	CY/LF	0.083
Concrete (Precast Barrier & Coping)	CY/LF	0.169
Concrete (C-I-P Junction Slab)	CY/LF	0.185
Reinforcing Steel (Precast Coping & Traffic Railing)	LB/LF	52.67
Reinforcing Steel (C-I-P Junction Slab) (Typ.)	LB/LF	12.52
Additional Reinf. @ Expansion Joints (Dowels)	LB	21.36

(The above concrete quantities are based on a max. superelevation of 6.25% and a 32" F-Shape Traffic Railing.

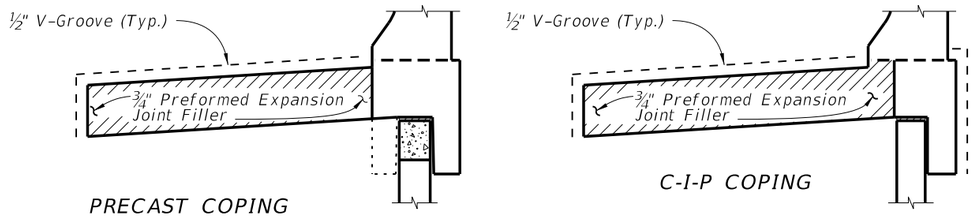

DETAIL "A"

(Showing Locations of ½" V-Grooves and ¾" Preformed Expansion Joint Filler)

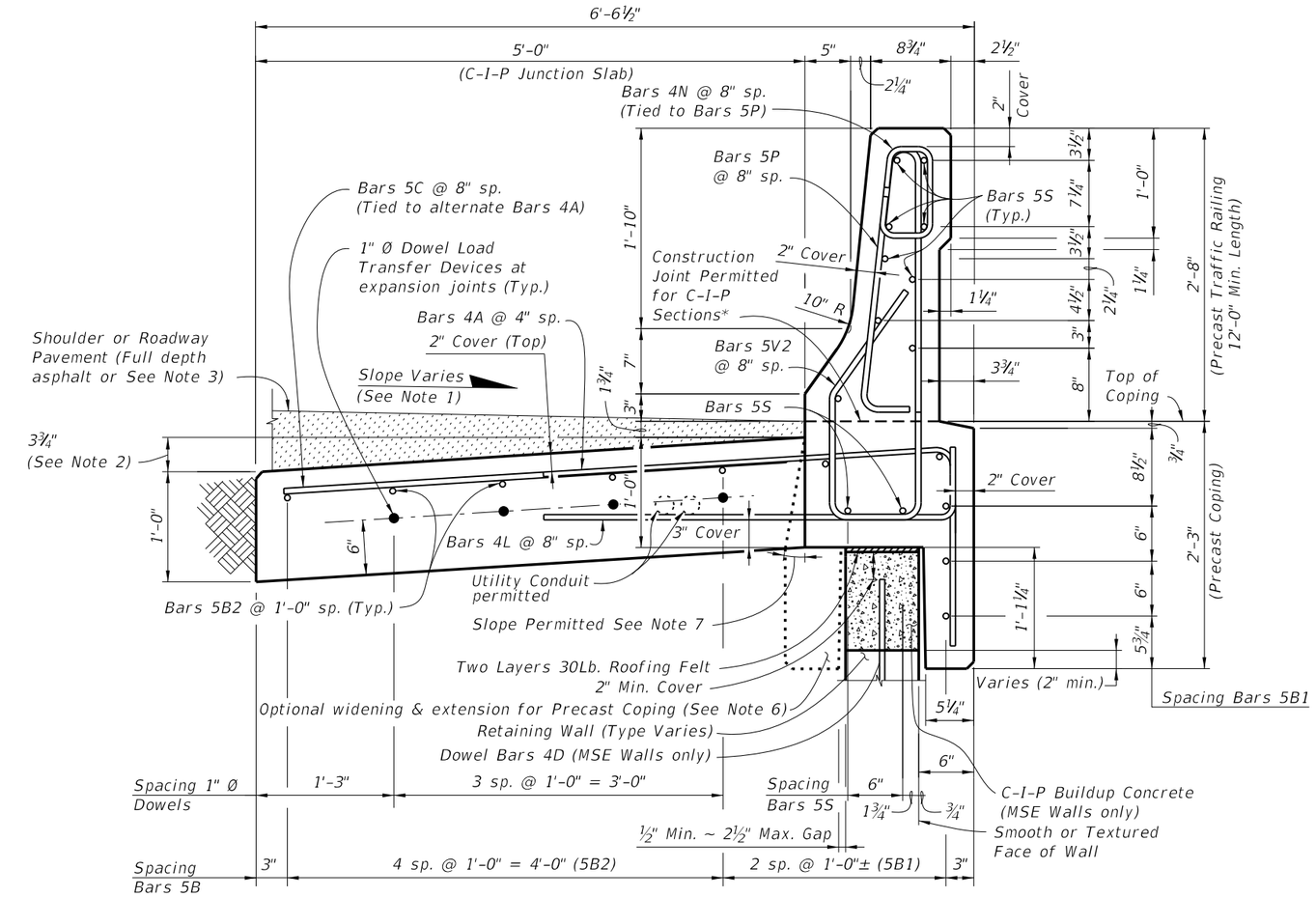

TYPICAL SECTION THRU PRECAST 32" F-SHAPE TRAFFIC RAILING AND COPING WITH C-I-P JUNCTION SLAB*

* C-I-P Traffic Railing and Coping Sections using precast dimensions and reinforcement are permitted at End Sections, Drainage Inlets and Light Pole Pedestals if slip forming is not used.

NOTES:

1. Match Cross Slope of Travel Lane or Shoulder.
2. The 3¾" dimension corresponds to a maximum superelevation of 6.25%. For steeper superelevations increase this dimension to match roadway superelevation.
3. For Rigid Pavement (Concrete), Junction Slab may be thickened to match finish grade.
4. Minimum length of Junction Slab between expansion joints is 30'-0".
5. At the Contractor's option, mechanical couplers may be used to splice reinforcing. Complete details, including reinforcement lengths are required in the Shop Drawings. Provide mechanical couplers in accordance with Specification Section 415. Mechanical couplers shall develop 125% of the bar yield strength.
6. Contractor to maintain stability of precast coping/traffic railing prior to junction slab completion. In the Shop Drawings, show reinforcement for optional extension required for stability, shipping and handling. Maintain 2" minimum concrete cover.
7. Angle varies ~ 0° min., 20° max.

F-SHAPE TRAFFIC RAILINGS

6/28/2012 2:14:42 PM rd960rh C:\d\projects\standards\structures\2013book\06110-2of6.dgn

REINFORCING STEEL BENDING DIAGRAMS

BILL OF REINFORCING STEEL

MARK	SIZE	LENGTH		
		PRECAST COPING & 32" F-SHAPE	COPING	
			C-I-P	Precast
A	4	5'-7"	8'-0"	5'-7"
B1	5	11'-6"	N/A	9'-6"
B2	5	AS REQD.	AS REQD.	AS REQD.
C	5	4'-8"	N/A	4'-8"
F	5	4'-8"	4'-8"	4'-8"
L	4	4'-5"	4'-5"	4'-5"
N	4	2'-6"	N/A	N/A
P	5	5'-7"	5'-7"	5'-7"
S	5	11'-6"	AS REQD.	9'-6"
S1	8	N/A	AS REQD.	9'-6"
V2	5	5'-10"	5'-10"	5'-10"
1" Ø Dowel	Smooth Bar	2'-0"	2'-0"	2'-0"

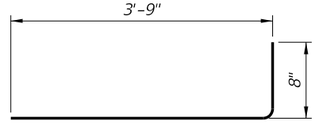

BARS 4L

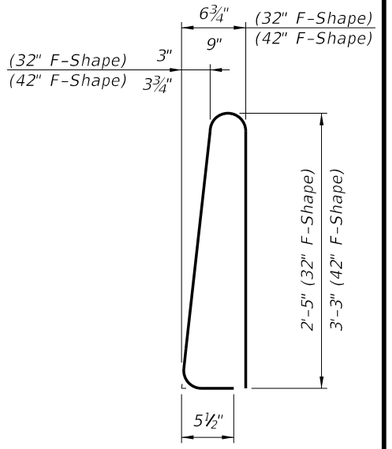

STIRRUP BAR 5P

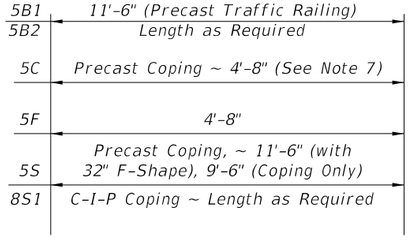

BARS 5B, 5C, 5F & 5S

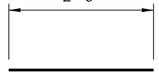

1" Ø DOWEL

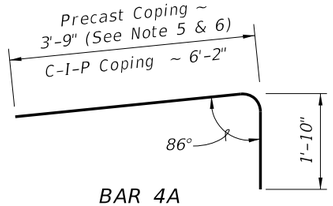

BAR 4A

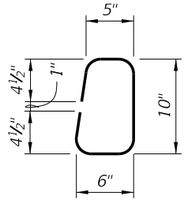

STIRRUP BAR 4N

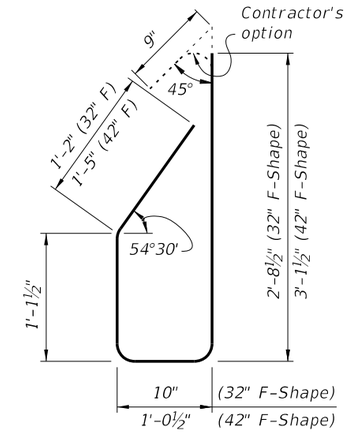

STIRRUP BAR 5V2

REINFORCING STEEL NOTES:

1. *All bar dimensions in the bending diagrams are out to out.*
2. *All reinforcing steel at expansion and open joints will have a 2" minimum cover.*
3. *Lap splices for Bars 5B & 5S will be a minimum of 2'-0".*
4. *For Precast Copings only, lap splice Bars 4A with Bars 5C. Lap splices will be a minimum of 2'-0".*
5. *The Contractor may use either full length Bars 4A or lap splice with Bars 5C at alternate Bars 4A for C-I-P Copings.*
6. *Dimension shown is for lap splice option. For mechanical coupler option, this dimension is 1'-4½" (32" F-Shape) or 1'-7" (42" F-Shape).*
7. *Dimension shown is for lap splice option. For mechanical coupler option, this dimension is 4'-8".*
8. *The Contractor may use Welded Wire Reinforcement when approved by the Engineer. Welded Wire Reinforcement will conform to ASTM A 497.*
9. *Contractor may use a single #5 stirrup in lieu of two bars for 5P and 5V2.*

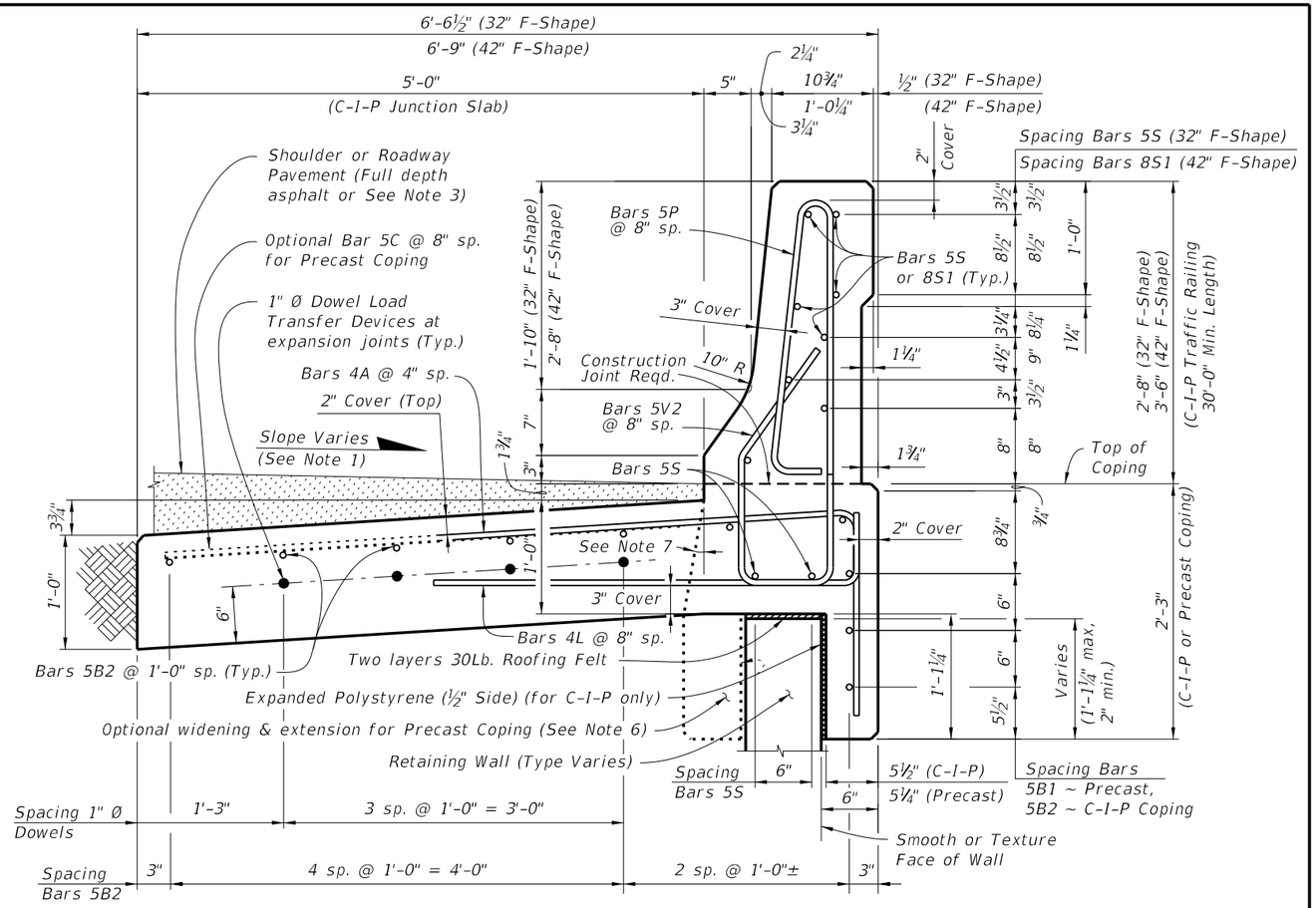

TYPICAL SECTION THRU C-I-P TRAFFIC RAILING WITH C-I-P JUNCTION SLAB AND C-I-P COPING (PRECAST COPING SIMILAR WITH C-I-P BUILDUP)

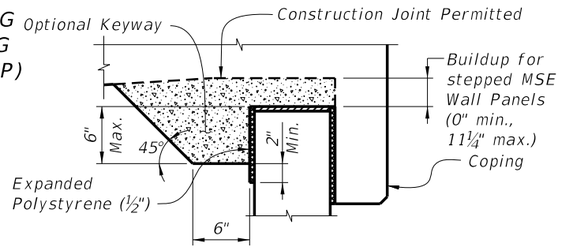

BUILDUP FOR STEPPED MSE WALL PANELS AND C-I-P COPING

ESTIMATED QUANTITIES FOR C-I-P COPING

ITEM	UNIT	QUANTITY
Concrete (Traffic Railing not Included)	CY/LF	0.268
Reinforcing Steel (Typical) excluding Bars 5V2 and 5S (Typ.)	LB/LF	30.89
Additional Reinf. @ Expansion Joint (Dowels)	LB/LF	21.36

(The above concrete quantities are based on a max. superelevation of 6.25%, beneath a 32" F-Shape Traffic Railing on an MSE Wall).

NOTES:

1. *Match Cross Slope of Travel Lane or Shoulder.*
2. *The 3¾" dimension corresponds to a maximum superelevation of 6.25%. For steeper superelevations increase this dimension to match roadway superelevation.*
3. *For Rigid Pavement (Concrete), Junction Slab may be thickened to match finish grade.*
4. *Minimum length of Junction Slab between expansion joints is 30'-0".*
5. *See Index No. 420 & 425 for additional Traffic Railing Details.*
6. *Contractor to maintain stability of precast coping prior to junction slab completion. In the Shop Drawings, show reinforcement for optional extension required for stability, shipping and handling. Maintain 2" minimum concrete cover.*
7. *Angle varies ~ 0° min., 20° max.*

F-SHAPE TRAFFIC RAILINGS

LAST REVISION	REVISION	DESCRIPTION:				
07/01/12			FDOT DESIGN STANDARDS 2013	WALL COPING WITH TRAFFIC RAILING/JUNCTION SLAB	INDEX NO. 6110	SHEET NO. 3

C:\d\projects\standards\structures\2013book\06110-3of6.dgn
rd960rh
2:14:44 PM
6/28/2012

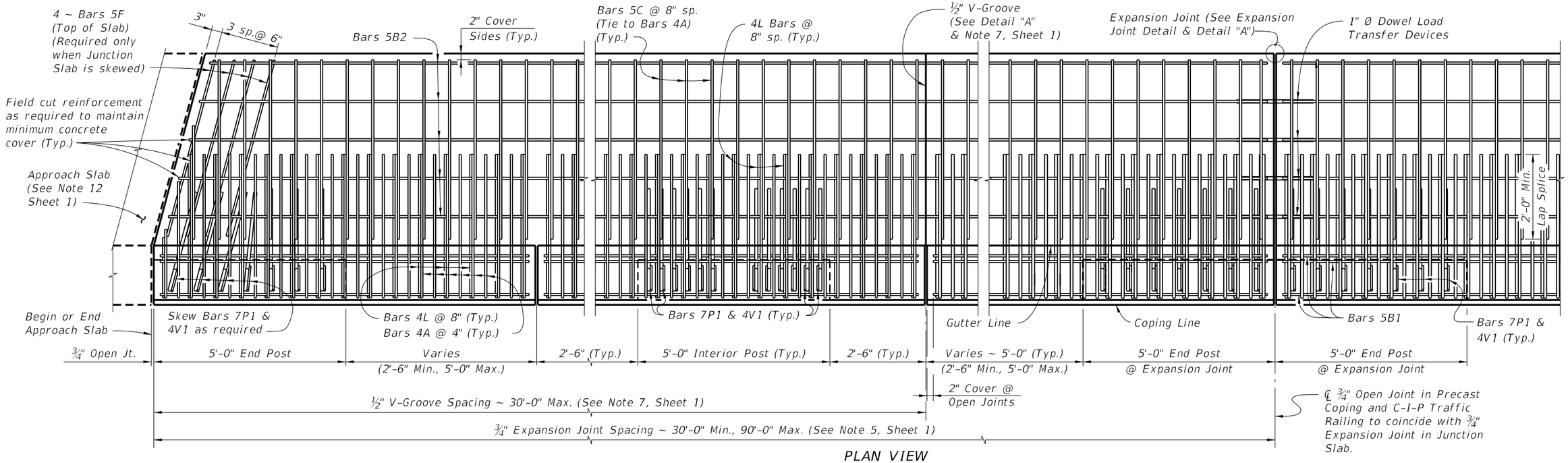

PLAN VIEW
(Skewed Approach Slab shown, Perpendicular Approach Slab similar)
(Precast Coping shown, C-I-P Coping similar)
(Traffic Railing reinforcement not shown, except for Bars 7P1 & 4V1)

CROSS REFERENCES:
1. *For Detail "A" see Sheet 2.*
2. *For "Expansion Joint Detail" see Sheet 1.*
3. *For "Junction Slab Notes" see Sheet 1.*

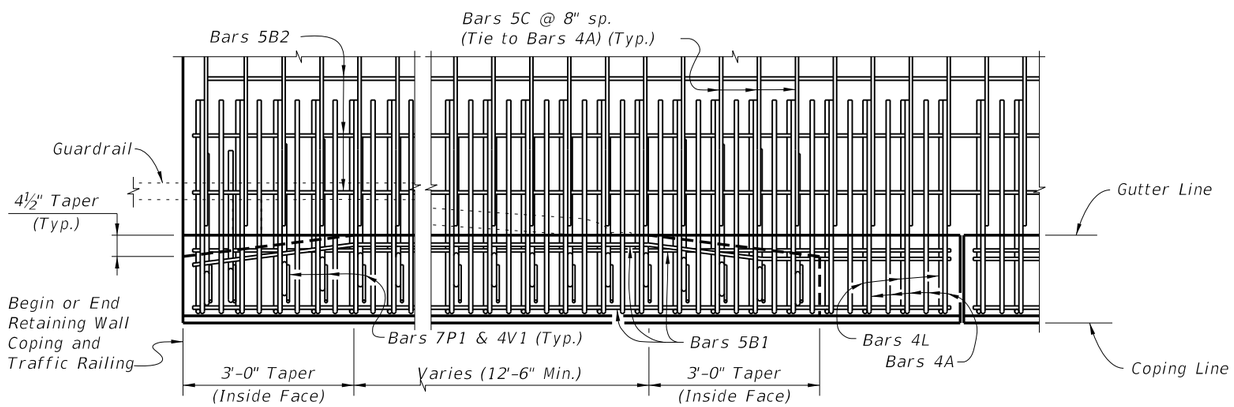

PARTIAL PLAN VIEW OF GUARDRAIL TRANSITION AT BEGIN OR END RETAINING WALL
(Precast Coping shown, C-I-P Coping similar)
(Traffic Railing reinforcement not shown, except for Bars 7P1 & 4V1)

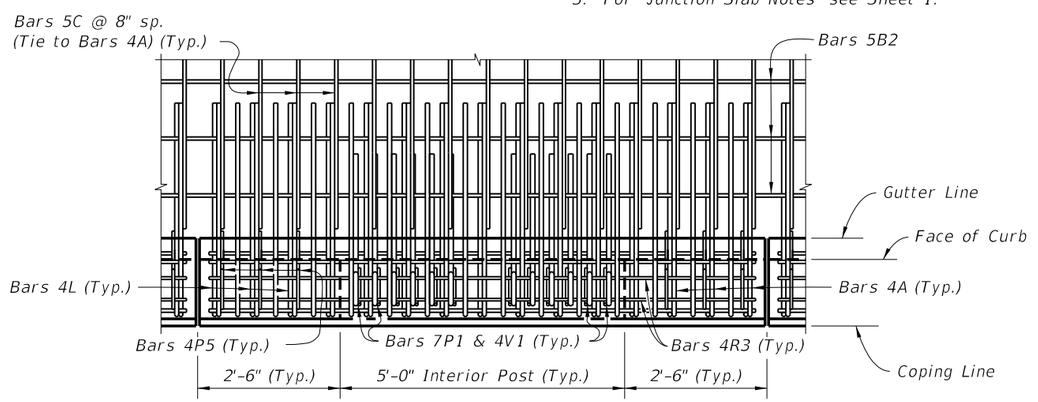

PARTIAL PLAN VIEW OF COPING WITH CURB
(Precast Coping shown, C-I-P Coping similar)
(Traffic Railing reinforcement not shown, except for Bars 7P1 & 4V1)

CORRAL SHAPE TRAFFIC RAILINGS

LAST REVISION	REVISION	DESCRIPTION:				
01/01/12			FDOT DESIGN STANDARDS 2013	WALL COPING WITH TRAFFIC RAILING/JUNCTION SLAB	INDEX NO. 6110	SHEET NO. 4

C:\d\projects\standards\structures\2013book\06110-4of6.dgn rd960rh 2:14:47 PM 6/28/2012

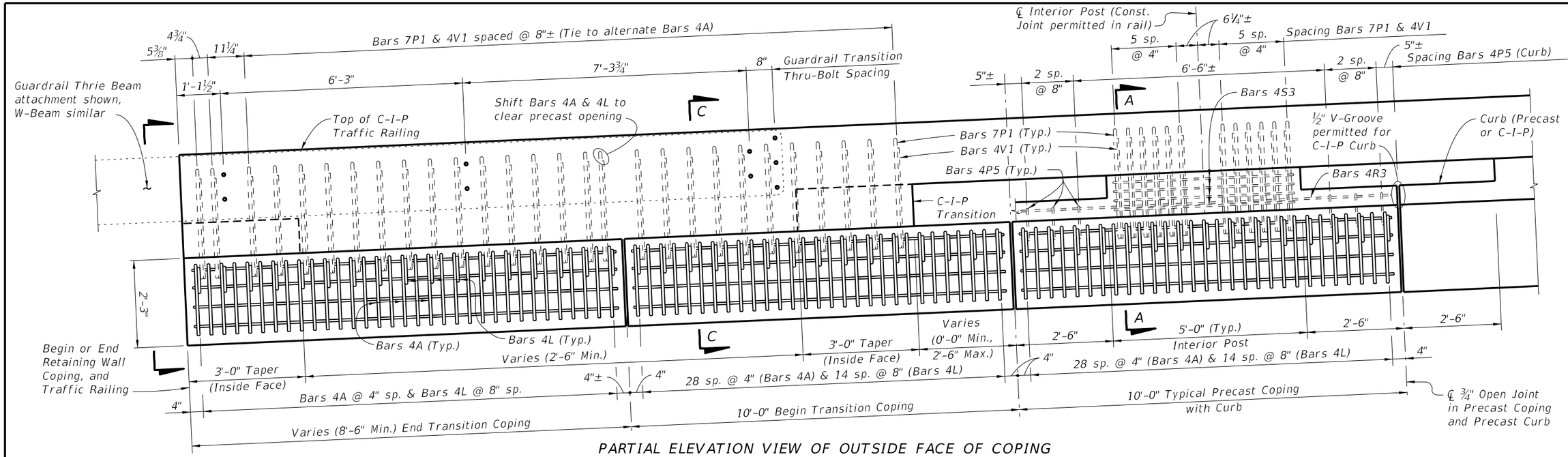

PARTIAL ELEVATION VIEW OF OUTSIDE FACE OF COPING
(End Transition and Typical Precast Coping with Curb shown, C-I-P Coping similar)

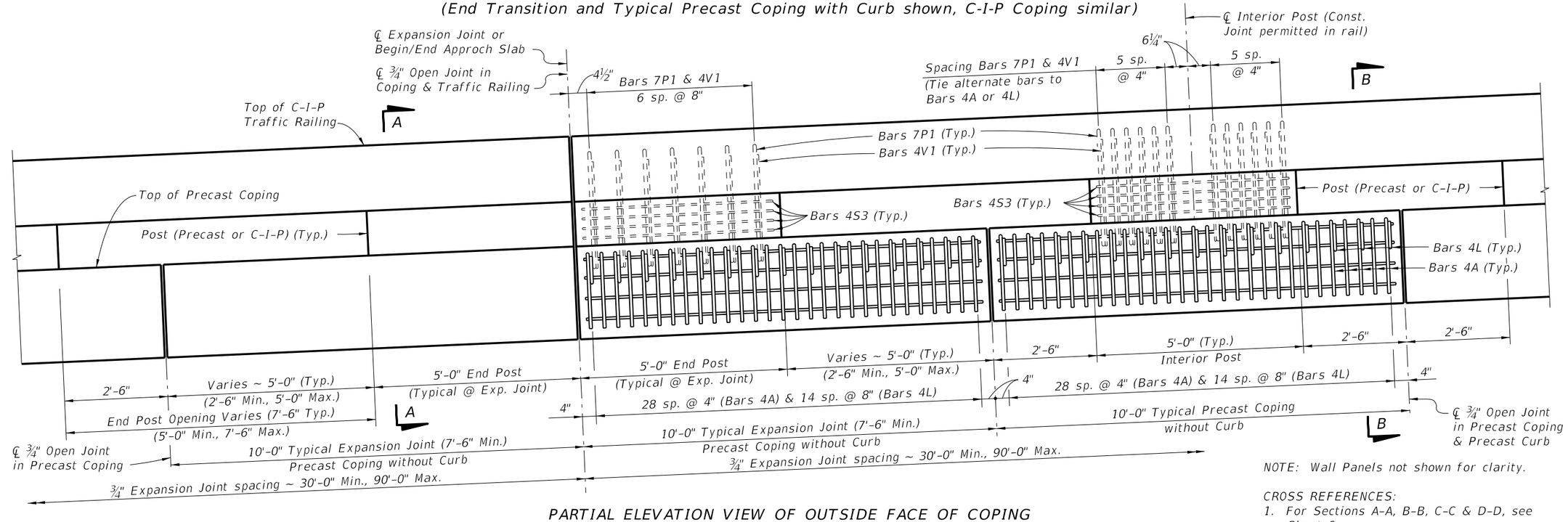

PARTIAL ELEVATION VIEW OF OUTSIDE FACE OF COPING
(Precast Coping at Expansion Joint and Typical Precast Coping without Curb shown, C-I-P Coping similar)

NOTE: Wall Panels not shown for clarity.

CROSS REFERENCES:
1. *For Sections A-A, B-B, C-C & D-D, see Sheet 6.*
2. *For Junction Slab Notes, see Sheet 1.*

CORRAL SHAPE TRAFFIC RAILINGS

C:\d\projects\standards\structures\2013book\06110-5of6.dgn
rd960rh
2:14:49 PM
6/28/2012

LAST REVISION	REVISION	DESCRIPTION:				
01/01/12			FDOT DESIGN STANDARDS 2013	WALL COPING WITH TRAFFIC RAILING/JUNCTION SLAB	INDEX NO. 6110	SHEET NO. 5

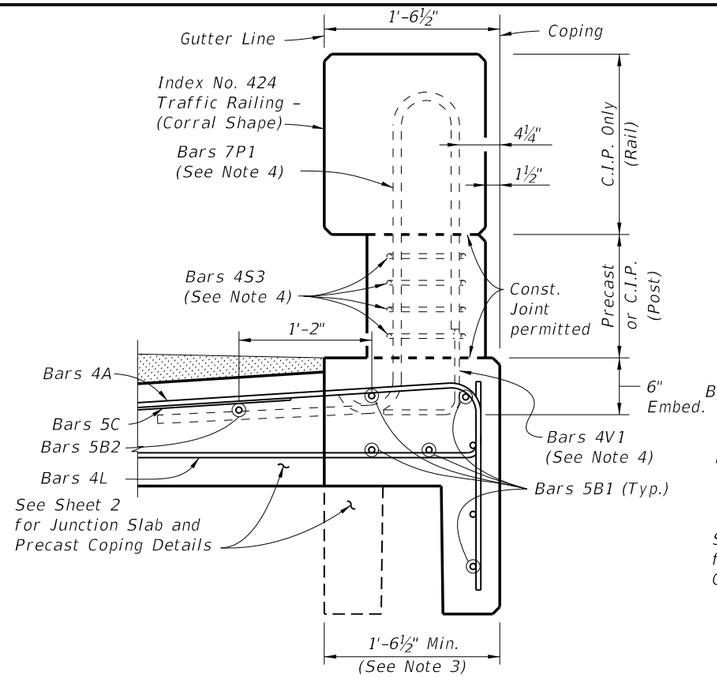

SECTION A-A
(TYPICAL SECTION PRECAST COPING WITHOUT CURB)

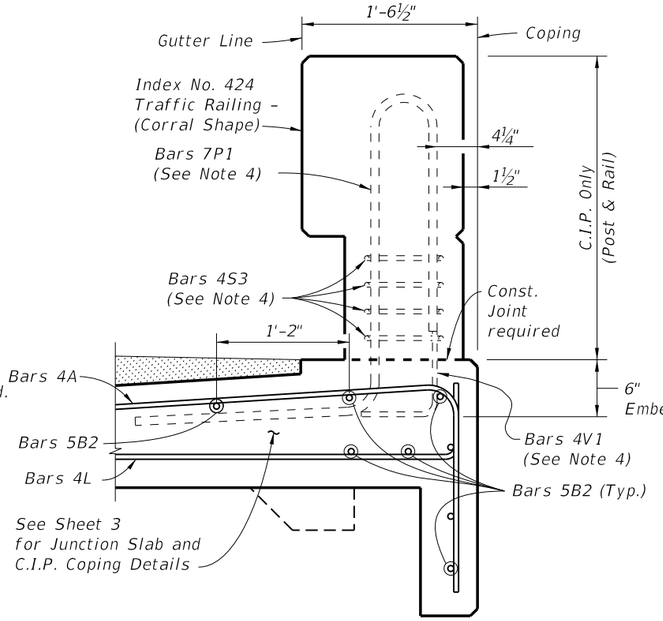

SECTION A-A
(TYPICAL SECTION C.I.P. COPING WITHOUT CURB)

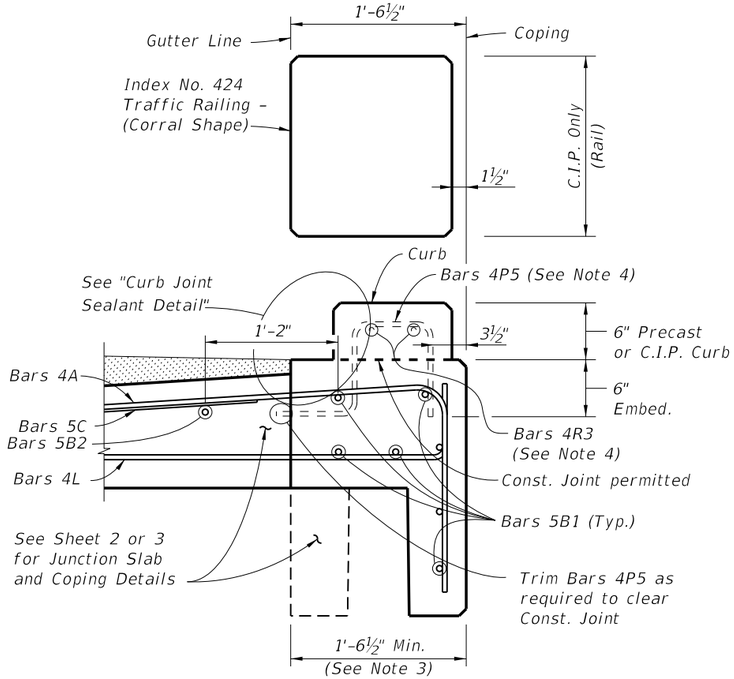

SECTION B-B
(TYPICAL SECTION WITH CURB)
(Precast Coping Shown, C.I.P. Coping Similar)

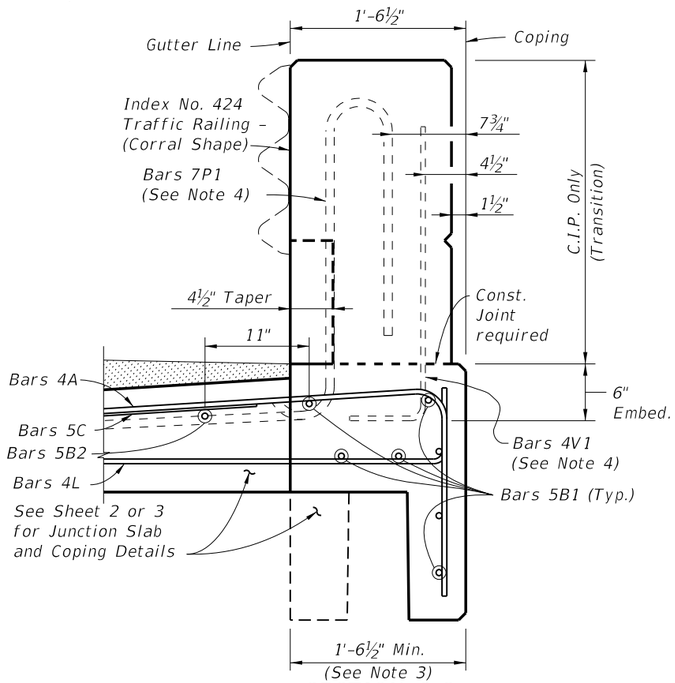

SECTION C-C
(TYPICAL SECTION TRANSITION COPING)
(Precast Coping shown, C.I.P. Coping similar)

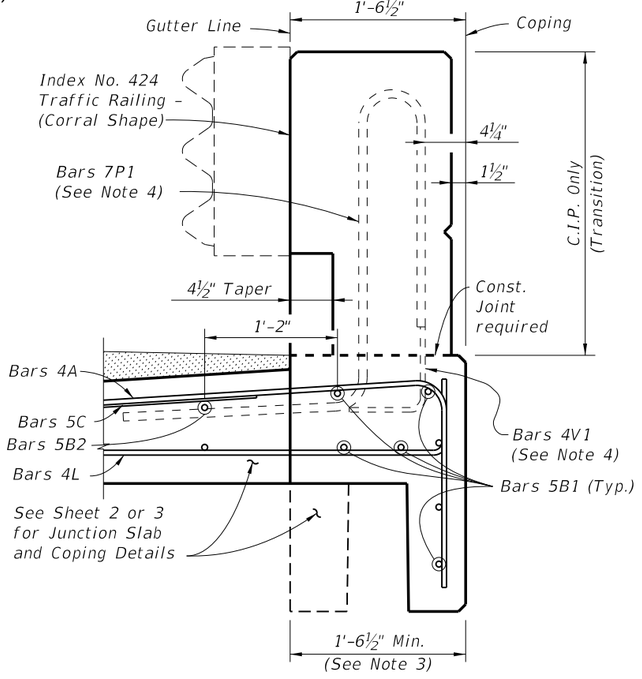

END VIEW D-D
(TYPICAL SECTION TRANSITION COPING)
(Precast Coping shown, C.I.P. Coping similar)

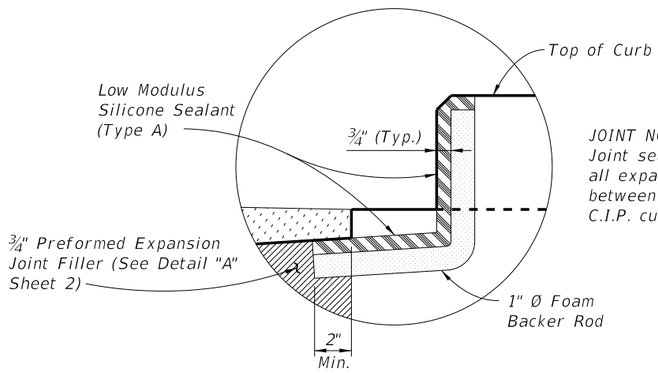

CURB JOINT SEALANT DETAIL

NOTES:
1. See Sheets 2 & 3 for Junction Slab and additional Coping details.
2. Slip Forming of C.I.P. Traffic Railiing is not permitted.
3. Actual width varies depending on type of Retaining Wall used.
4. See Index No. 424 for Traffic Railing details and Bars 7P1, 4P5, 4R3, 4S3 & 4V1. Bars 5R2 and 5U are not required in Retaining Wall Coping.

CORRAL SHAPE TRAFFIC RAILINGS

LAST REVISION	REVISION	DESCRIPTION:				
01/01/12			FDOT DESIGN STANDARDS 2013	WALL COPING WITH TRAFFIC RAILING/JUNCTION SLAB	INDEX NO. 6110	SHEET NO. 6

6/28/2012 2:14:51 PM rd960rh C:\d\projects\standards\structures\2013book\06110-6of6.dgn

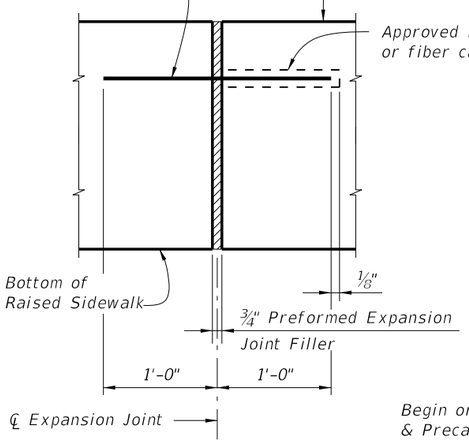

EXPANSION JOINT DETAIL

(Raised Sidewalk expansion joints are to coincide with 3/4" open joints in Traffic Railing)

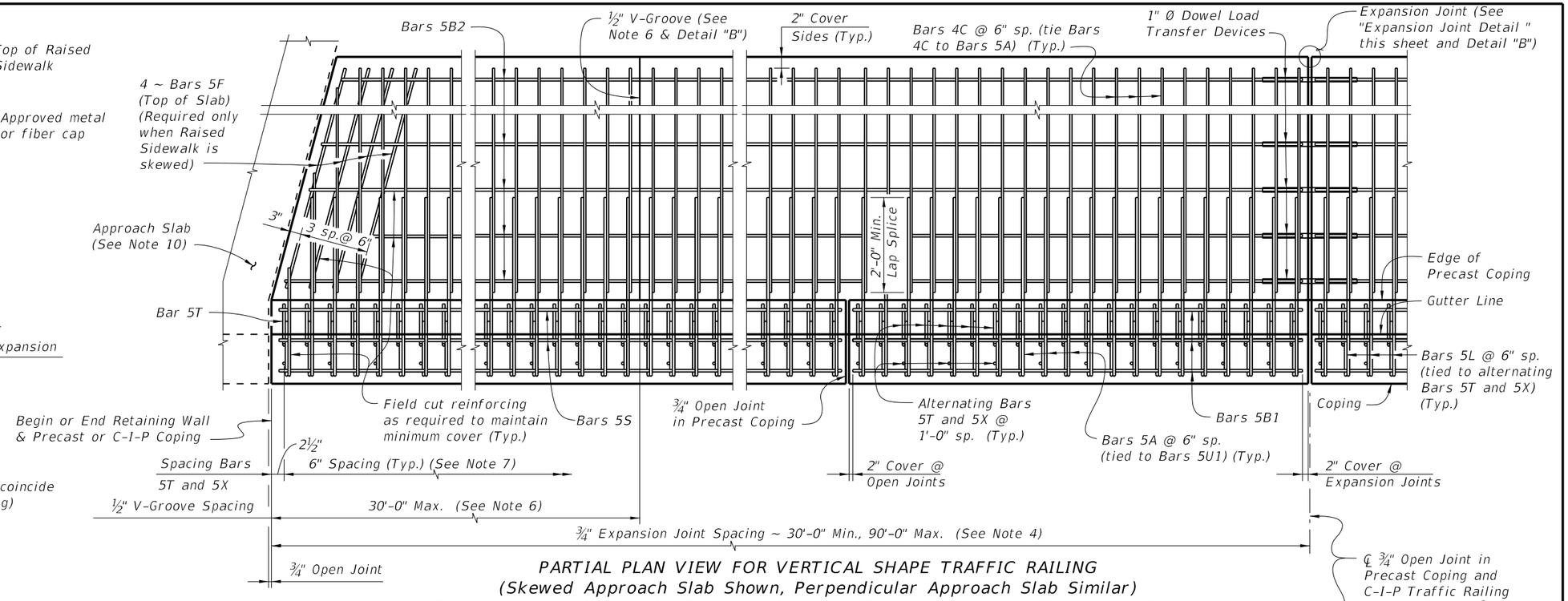

PARTIAL PLAN VIEW FOR VERTICAL SHAPE TRAFFIC RAILING

(Skewed Approach Slab Shown, Perpendicular Approach Slab Similar)
(Precast Coping Shown, C-I-P Coping Similar) (Traffic Railing not Shown for Clarity)

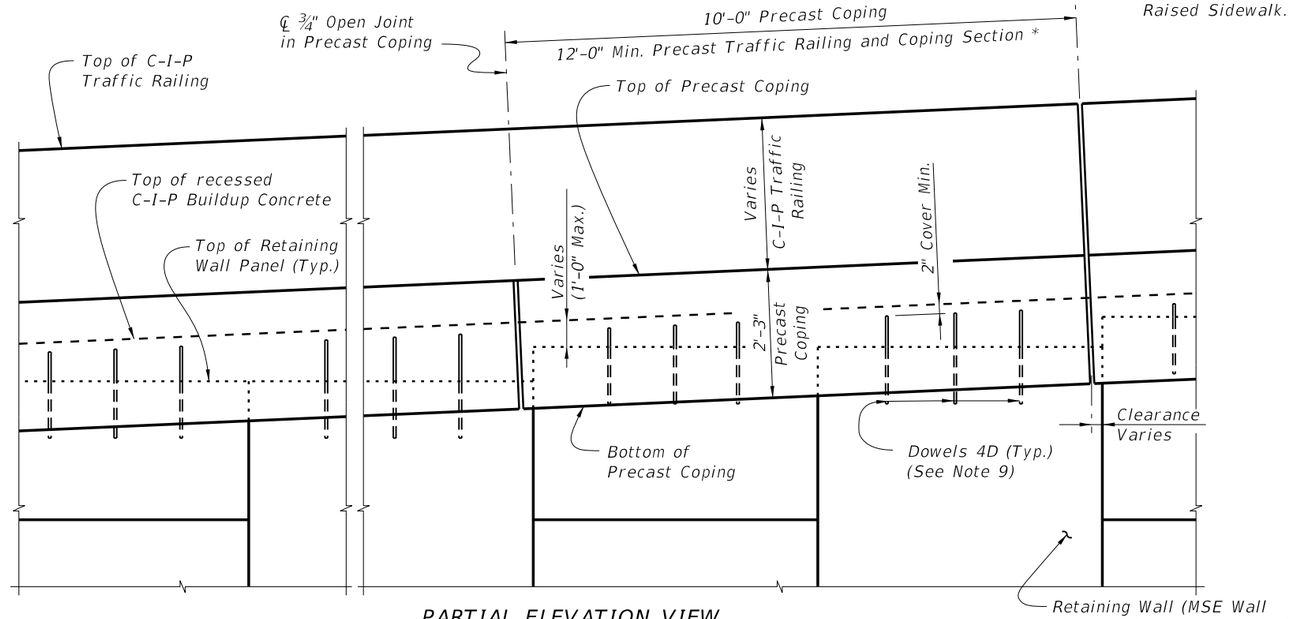

PARTIAL ELEVATION VIEW

(Precast Coping & Raised Sidewalk Reinforcing not Shown for Clarity)
(Precast Coping Shown, C-I-P Coping Similar)

* C-I-P End Section must be ≥ 12'-0".

RAISED SIDEWALK NOTES:

1. *APPLICATIONS: This raised sidewalk is only applicable for a TL-4 crash test rating. For TL-5 crash test rating increase Expansion Joint spacing to 60'-0" minimum and increase Bars 4C to Bars 5C or provide Bars 4C @ 4" spacing with the 42" Vertical Shape Traffic Railing.*
2. *CONSTRUCTION REQUIREMENTS: Construct the raised sidewalk level transversely and expansion joints plumb; do not construct the raised sidewalk or C-I-P coping perpendicular to the roadway surface. Slip forming of coping and/or raised sidewalk is not permitted.*
3. *Provide Class II concrete for slightly aggressive environments or Class IV for moderately or extremely aggressive environments.*
4. *Dowel Load Transfer Devices will be ASTM A 36 smooth round bar and hot-dip galvanized in accordance with Specification Section 962. Install Dowel Load Transfer Devices in accordance with Specification Section 350.*
5. *Construct 3/4" Expansion Joints in raised sidewalk and C-I-P copings plumb and perpendicular or radial to the Gutter Line. Provide at 90'-0" maximum intervals as shown.*
6. *Provide and install Preformed Expansion Joint Filler in accordance with Specification Section 932.*
7. *Construct 1/2" V-Grooves in raised sidewalk and C-I-P coping plumb and provide at 30'-0" maximum intervals as shown. Space V-Grooves equally between 3/4" Expansion Joints and/or Begin or End Raised Sidewalk. V-Groove locations are to coincide with V-Groove locations in the Traffic Railing.*
8. *Spacing shown is along the Gutter Line.*
9. *For MSE Walls, provide Dowel Bars 4D and extend 8" above the top of retaining wall panel. Field cut as necessary to maintain 2" minimum cover to the top of the buildup concrete. See Wall Company Drawings for number and spacing of Dowel Bars 4D.*
10. *Finish Sidewalks in accordance with Specification Section 522.*
11. *Work this Index with the following:*
    Index No. 422 – Traffic Railing – (42" Vertical Shape)
    Index No. 423 – Traffic Railing – (32" Vertical Shape)
12. *The following Indexes contain details of the intersection of the retaining wall at approach slabs:*
    Index No. 20900 – Approach Slabs (Flexible Pavement Approaches)
    Index No. 20910 – Approach Slabs (Rigid Pavement Approaches)

CROSS REFERENCE: For Detail "B", see Sheet 2.

C:\d\projects\standards\structures\2013book\06120-1of3.dgn
rd960rh
2:14:56 PM
6/28/2012

LAST REVISION	REVISION	DESCRIPTION:				
07/01/12			FDOT DESIGN STANDARDS 2013	WALL COPING WITH TRAFFIC RAILING/RAISED SIDEWALK	INDEX NO. 6120	SHEET NO. 1

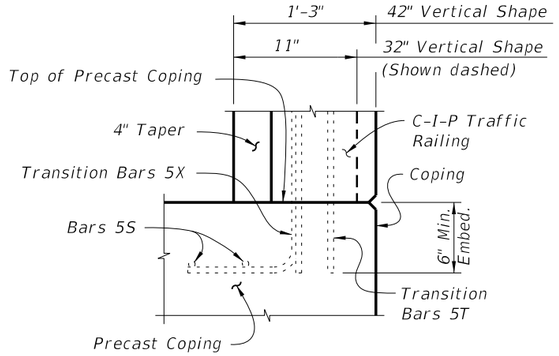

PARTIAL END VIEW OF TRAFFIC RAILING END TRANSITION FOR GUARDRAIL ATTACHMENT (Showing Bars 5S, Bars 5T and Bars 5X) (Precast Coping Shown, C-I-P Coping Similar)

NOTE: See Index No. 422 and Index No. 423, Railing End Detail for details.

ESTIMATED QUANTITIES FOR PRECAST COPING		
ITEM	UNIT	QUANTITY
Concrete (Precast Coping)	CY/LF	0.095
Concrete (C-I-P Raised Sidewalk)	CY/LF	0.232
Reinforcing Steel (Precast Coping) excluding Bars 5T, 5X and 5S (Typ.)	LB/LF	23.90
Reinforcing Steel (C-I-P Raised Sidewalk) (Typ.)	LB/LF	13.50
Additional Reinf. @ Expansion Joints (Dowels)	LB	32.04

The above concrete quantities are based on a Type D Concrete Curb (See Note 2).

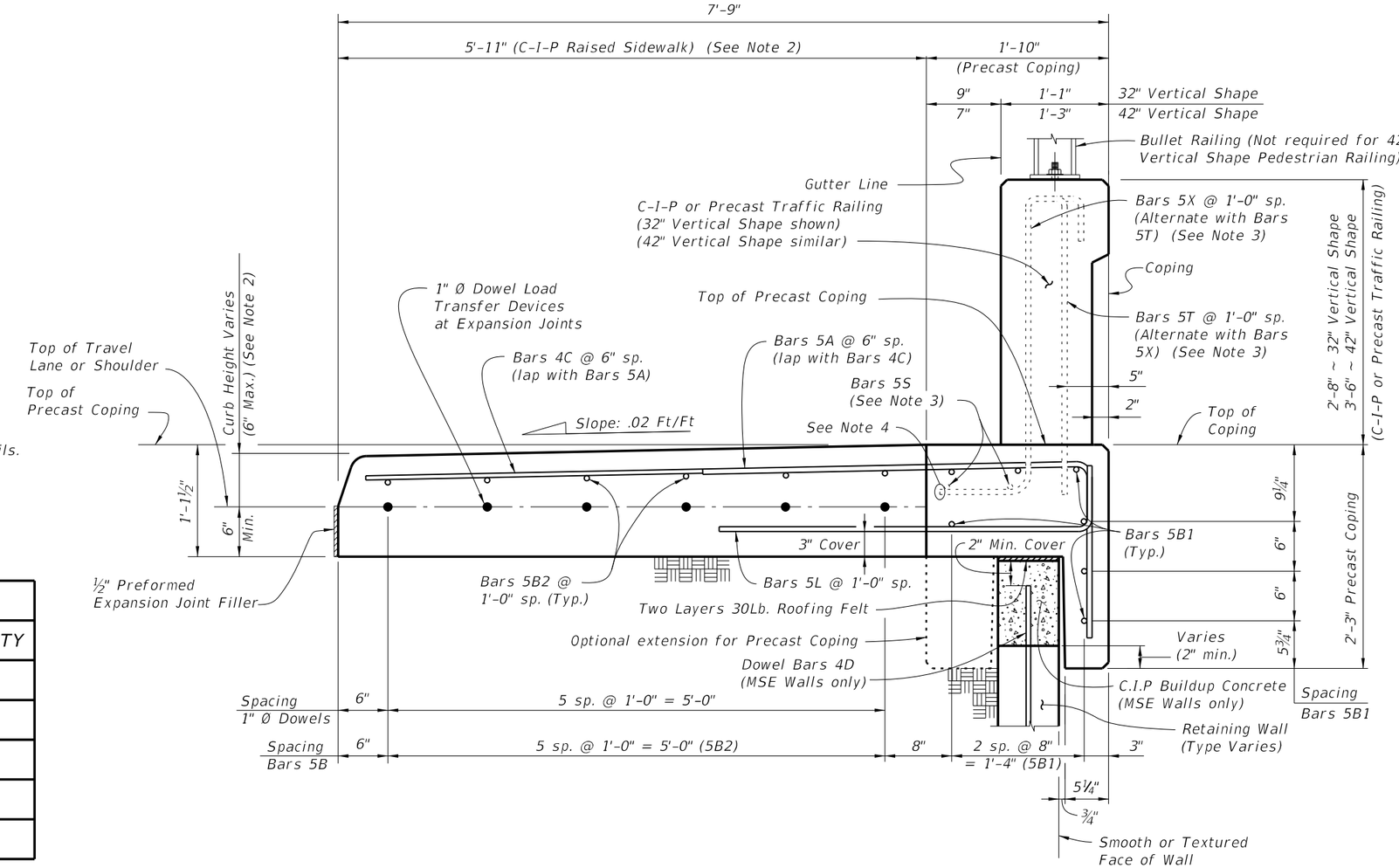

TYPICAL SECTION THRU PRECAST COPING WITH C-I-P RAISED SIDEWALK AND RETAINING WALL AT EXPANSION JOINTS

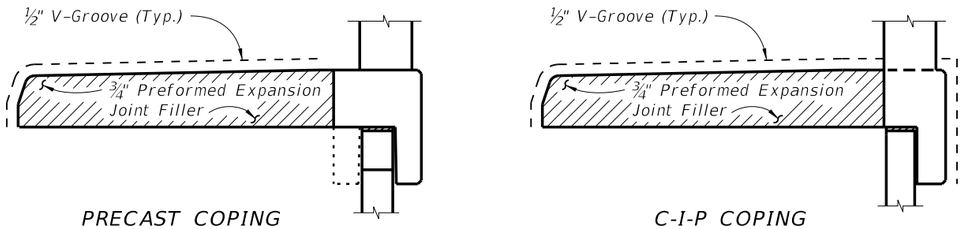

PRECAST COPING *C-I-P COPING*

DETAIL "B"

(Showing Locations of ½" V-Grooves and ¾" Preformed Expansion Joint Filler)

NOTES:

1. *Actual width varies depending on type of Retaining Wall used.*
2. *Match roadway curb shape (Type) and height. See Roadway Plans and Index No. 300. 5'-11" dimension is based on a 32" Vertical Shape Traffic Railing with a Type D curb adjacent to a 6'-0" wide sidewalk. Adjust this dimension as required for other curb types or transitions at Begin or End Retaining Wall.*
3. *See Index No. 422 and Index No. 423 for Bars 5S, 5T & 5X and Bullet Railing details. Adjust vertical dimension of Bars 5T and 5X, see Reinforcing Steel Note 5.*
4. *Trim end of Bars 5T and 5X to clear construction joint for 42" Vertical Shape Traffic Railing.*
5. *At the Contractor's option, mechanical couplers may be used to splice reinforcing. Complete details, including reinforcement lengths are required in the Shop Drawings. Mechanical couplers shall develop 125% of the bar yield strength.*
6. *Contractor to maintain stability of precast coping prior to junction slab completion.*

C:\d_projects\standards\structures\2013book\06120-2of3.dgn rd960rh 2:14:58 PM 6/28/2012

LAST REVISION	REVISION	DESCRIPTION:			INDEX NO.	SHEET NO.
07/01/12			FDOT DESIGN STANDARDS 2013	WALL COPING WITH TRAFFIC RAILING/RAISED SIDEWALK	6120	2

REINFORCING STEEL BENDING DIAGRAMS - RAISED SIDEWALK

BILL OF REINFORCING STEEL

MARK	SIZE	LENGTH	
		PRECAST COPING/ RAILING	C-I-P COPING
A	5	5'-9"	9'-1"
B1	5	9'-6"/11'-6"	N/A
B2	5	AS REQD.	AS REQD.
C	4	5'-5"	N/A
F	5	5'-0"	5'-0"
L	5	4'-5"	4'-5"
1" Ø Dowel	Smooth Steel Bar	2'-0"	2'-0"

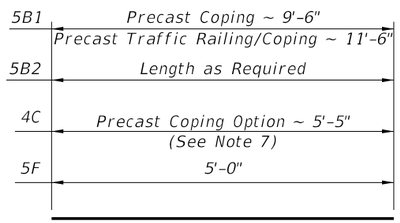

BARS 5B1, 5B2, 4C & 5F

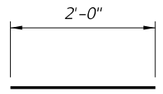

1" Ø DOWEL

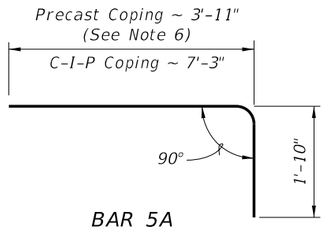

BAR 5A

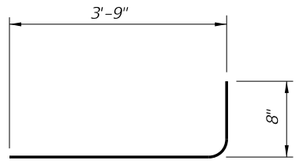

BAR 5L

REINFORCING STEEL NOTES:

1. All bar dimensions in the bending diagrams are out to out.
2. All reinforcing steel at expansion joints will have a 2" minimum cover.
3. Lap splices for Bars 5B will be a minimum of 2'-0".
4. Lap splice Bars 5A with Bars 4C. Lap splices will be a minimum of 2'-0".
5. See Index No. 422 and Index No. 423 for Bars 5S, 5T and 5X. Adjust vertical dimensions of Stirrup Bars 5T and 5X to 3'-0" for 32" Vertical Shape or 3'-10" for 42" Vertical Shape.
6. Dimension shown is for lap splice option. For mechanical coupler option, this dimension is 1'-8".
7. Dimension shown is for lap splice option. For mechanical coupler option, this dimension is 5'-8", and reinforcing size must be increased to #5 bars (Bars 5C).
8. The Contractor may use Welded Wire Reinforcement when approved by the Engineer. Welded Wire Reinforcement will conform to ASTM A 497.

ESTIMATED QUANTITIES FOR C-I-P COPING

ITEM	UNIT	QUANTITY
Concrete	CY/LF	0.326
Reinforcing Steel (Typical) excluding Bars 5T, 5X and 5S (Typ.)	LB/LF	35.03
Additional Reinf. @ Expansion Joints (Dowels)	LB	32.04

The above concrete quantities are based on a Type D Concrete Curb on a level Retaining Wall (See Note 1).

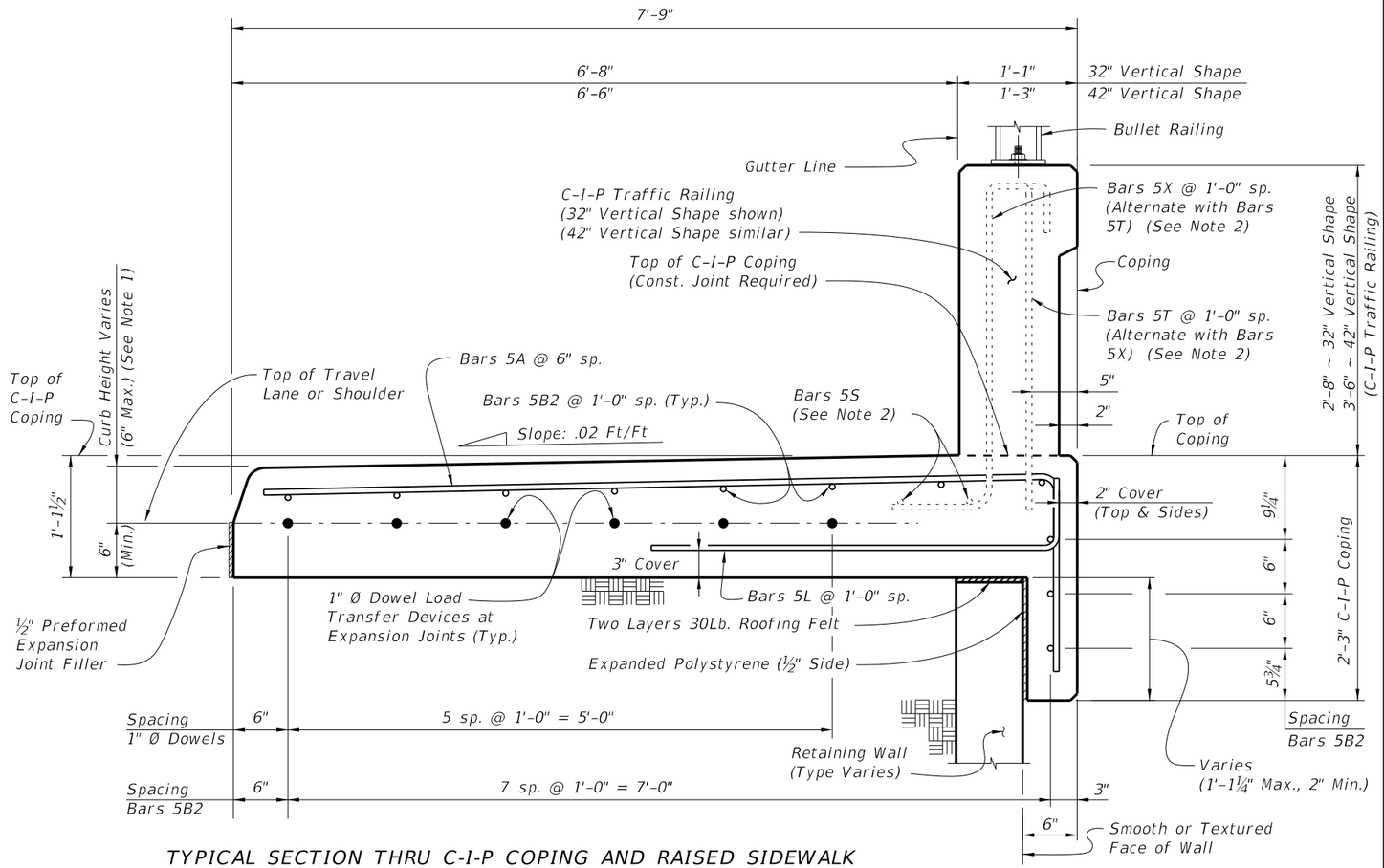

TYPICAL SECTION THRU C-I-P COPING AND RAISED SIDEWALK AND RETAINING WALL AT EXPANSION JOINTS

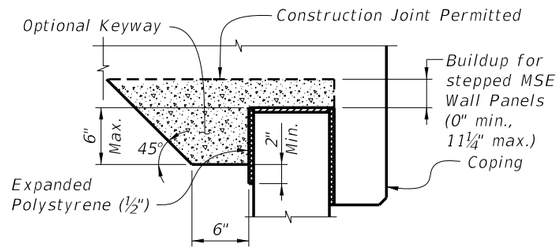

BUILDUP FOR STEPPED MSE WALL PANELS AND C-I-P COPING

NOTES:

1. Match roadway curb shape (Type) and height. See Roadway Plans and Index No. 300. 6'-8" dimension is based on a 32" Vertical Shape Traffic Railing with a Type D curb adjacent to a 6'-0" wide sidewalk. Adjust this dimension as required for other curb types or transitions at Begin or End Retaining Wall.
2. See Index No. 422 and Index No. 423 for Bars 5S, 5T & 5X and Bullet Railing details. Adjust vertical dimension of Bars 5T and 5X, see Reinforcing Steel Note 5.

C:\d\projects\standards\structures\2013book\06120-3of3.dgn rd960rh 2:15:01 PM 6/28/2012

LAST REVISION	REVISION	DESCRIPTION:				
07/01/12			FDOT DESIGN STANDARDS 2013	WALL COPING WITH TRAFFIC RAILING/RAISED SIDEWALK	INDEX NO. 6120	SHEET NO. 3

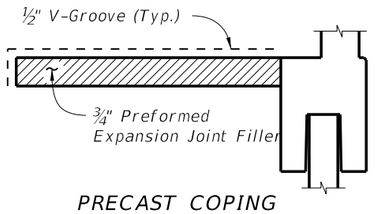

PRECAST COPING

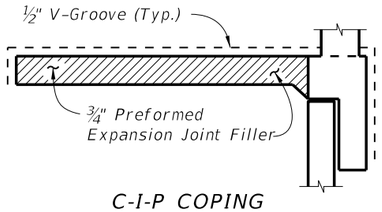

C-I-P COPING

DETAIL "C"

(Showing Locations of ½" V-Grooves and ¾" Preformed Expansion Joint Filler)

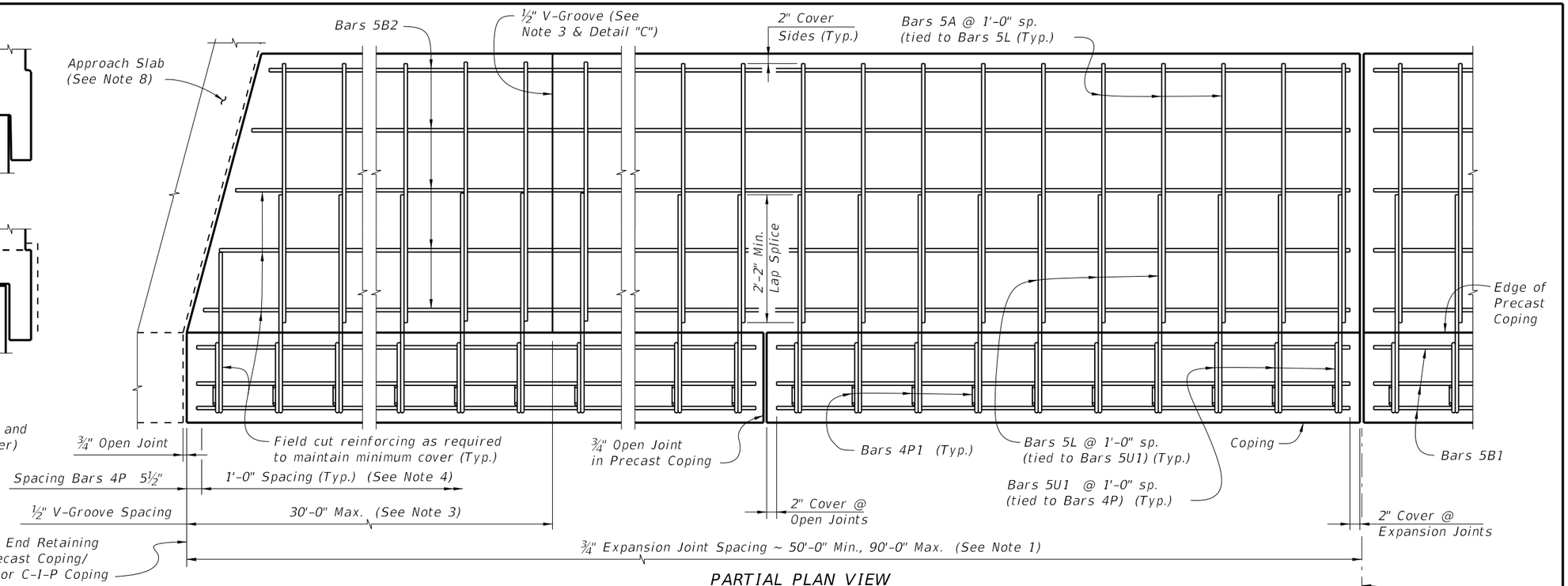

PARTIAL PLAN VIEW

(Skewed Approach Slab Shown, Perpendicular Approach Slab Similar)

(Precast Coping Shown, C-I-P Coping Similar) (Concrete Parapet not Shown for Clarity)

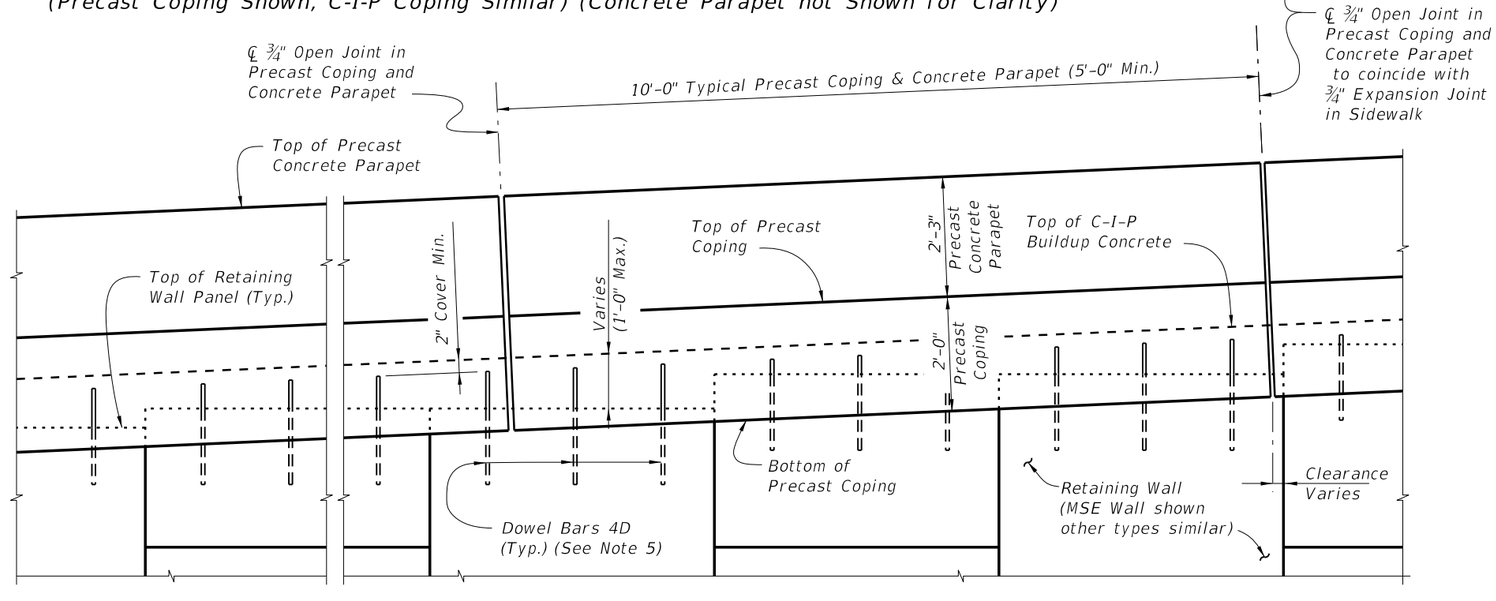

PARTIAL ELEVATION VIEW

(Precast Coping and Sidewalk Reinforcing not Shown for Clarity)

(Precast Coping Shown, C-I-P Coping Similar)

PRECAST COPING/PARAPET AND SIDEWALK NOTES:

1. Provide Class II concrete for slightly aggressive environments or Class IV for moderately or extremely aggressive environments.
2. Construct ¾" Expansion Joints in sidewalk and C-I-P coping plumb and perpendicular or radial to the Gutter Line. Provide at 90'-0" maximum intervals as shown.
3. Provide and install Preformed Expansion Joint Filler in accordance with Specification Section 932.
4. Construct ½" V-Grooves in sidewalk and C-I-P coping plumb and provide at 30'-0" maximum intervals as shown. Space V-Grooves equally between ¾" Expansion Joints and/or Begin or End Sidewalk. For C-I-P Coping only, V-Groove locations are to coincide with V-Groove locations in the Concrete Parapet.
5. Spacing shown is along the Gutter Line.
6. For Precast Coping only, Dowel Bars 4D are to extend 1'-0" above the top of retaining wall panel. Field cut as necessary to maintain 2" minimum cover to the top of the buildup concrete. See Wall Company Drawings for number and spacing of Dowel Bars 4D.
7. Work this Index with the following:
   Index No. 410 – Concrete Barrier Wall
8. For C-I-P Coping only, work this Index with the following:
   Index No. 820 – Pedestrian/Bicycle Railing.
9. Finish Sidewalks in accordance with Specifications Section 522.
10. The following Indexes contain details of the intersection of the retaining wall at approach slabs:
    Index No. 20900 – Approach Slabs (Flexible Pavement Approaches)
    Index No. 20910 – Approach Slabs (Rigid Pavement Approaches)

C:\d\projects\standards\structures\2013book\06130-1of2.dgn rd960rh 2:15:03 PM 6/28/2012

LAST REVISION	REVISION	DESCRIPTION:		FDOT DESIGN STANDARDS 2013	WALL COPING/PARAPET WITH C-I-P SIDEWALK	INDEX NO.	SHEET NO.
01/01/11						6130	1

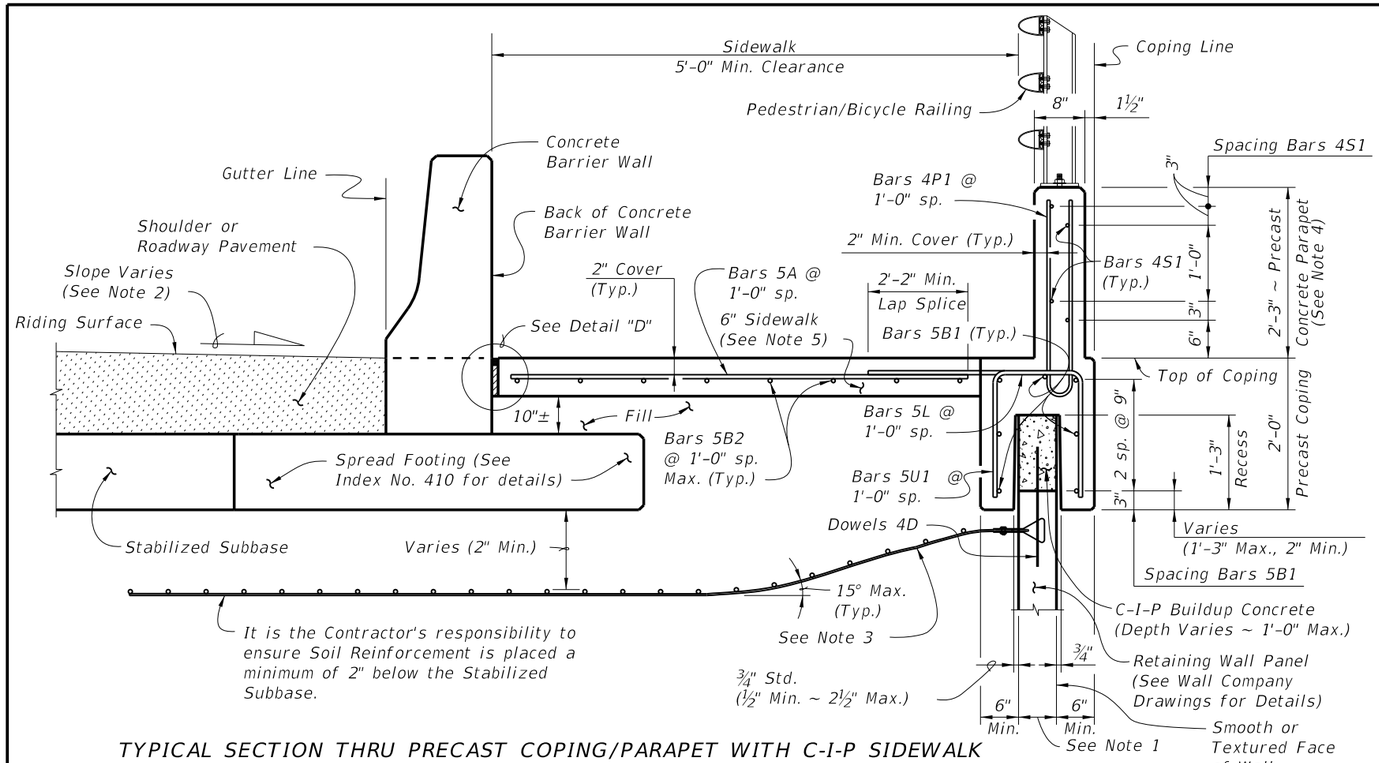

TYPICAL SECTION THRU PRECAST COPING/PARAPET WITH C-I-P SIDEWALK AND RETAINING WALL (MSE Wall Shown, other Wall Types Similar)

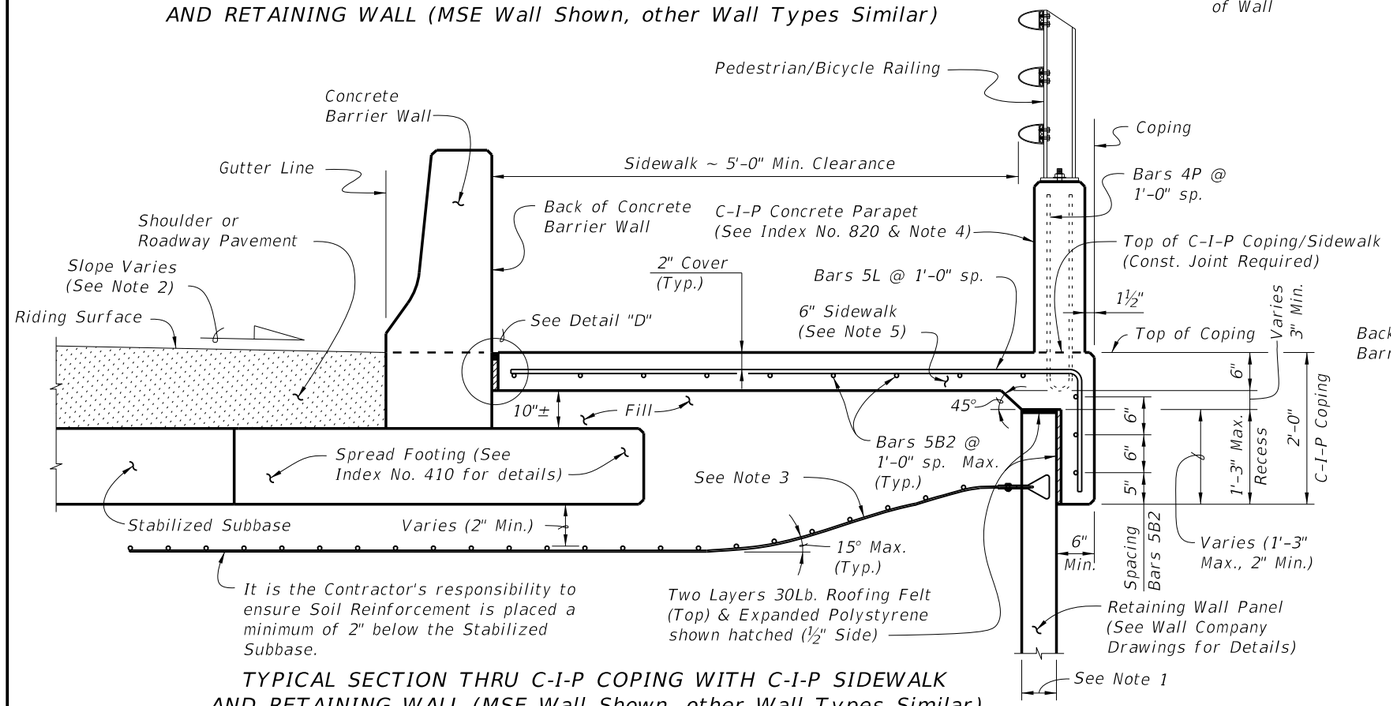

TYPICAL SECTION THRU C-I-P COPING WITH C-I-P SIDEWALK AND RETAINING WALL (MSE Wall Shown, other Wall Types Similar)

REINFORCING STEEL BENDING DIAGRAMS - COPING/PARAPET AND SIDEWALK

BILL OF REINFORCING STEEL

MARK	SIZE	LENGTH	
		PRECAST COPING	C-I-P COPING
A	5	VARIES	N/A
B1	5	9'-6"	N/A
B2	5	AS REQD.	AS REQD.
D	4	2'-0"	N/A
L	5	VARIES	VARIES
P1	4	5'-5"	N/A
S1	4	9'-6"	N/A
U1	5	VARIES	N/A

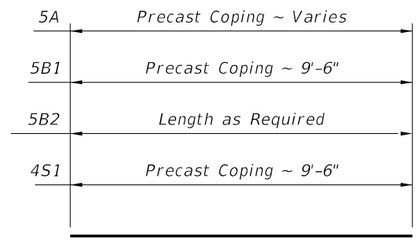

BARS 5A, 5B1, 5B2 & 4S1

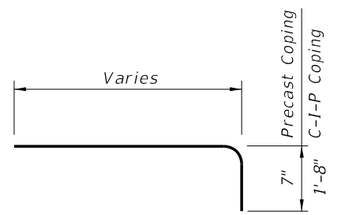

BAR 5L

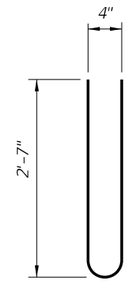

BAR 4P1

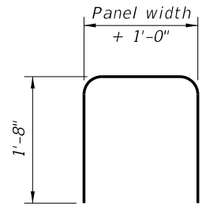

BAR 5U1

REINFORCING STEEL NOTES:

1. *All bar dimensions in the bending diagrams are out to out.*
2. *All reinforcing steel at expansion joints will have a 2" minimum cover.*
3. *Lap splices for Bars 5B2 will be a minimum of 2'-2".*
4. *For Precast Coping only, lap splice Bars 5L with Bars 5A. Lap splices will be a minimum of 2'-2".*
5. *For C-I-P only, see Index No. 820 for Bars 4P and 4S.*
6. *The Contractor may use Welded Wire Reinforcement when approved by the Engineer. Welded Wire Reinforcement must conform to ASTM A 497.*

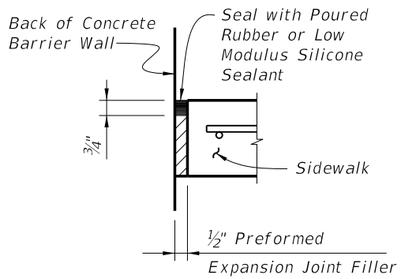

DETAIL "D"

PRECAST COPING/PARAPET AND SIDEWALK NOTES:

1. *Actual width varies depending on type of Retaining Wall used.*
2. *Match Cross Slope of Travel Lane or Shoulder.*
3. *Gradually deflect/displace Soil Reinforcement downward as required. Soil Reinforcement is shown deflected downward for illustrative purposes only and is not to scale. See Wall Company Drawings for details.*
4. *Concrete Parapet shown, Concrete Pedestrian/Bicycle Railing (Index No. 825 & 826) similar. Complete details and dimensions of Concrete Pedestrian/Bicycle Railing are required in the Shop Drawings.*
5. *Match cross slope of connecting sidewalk or as shown in the Wall Control Drawings.*

C:\d\projects\standards\structures\2013book\06130-2of2.dgn rd960rh 2:15:06 PM 6/28/2012

LAST REVISION	REVISION	DESCRIPTION:			INDEX NO.	SHEET NO.
01/01/12			FDOT DESIGN STANDARDS 2013	WALL COPING/PARAPET WITH C-I-P SIDEWALK	6130	2

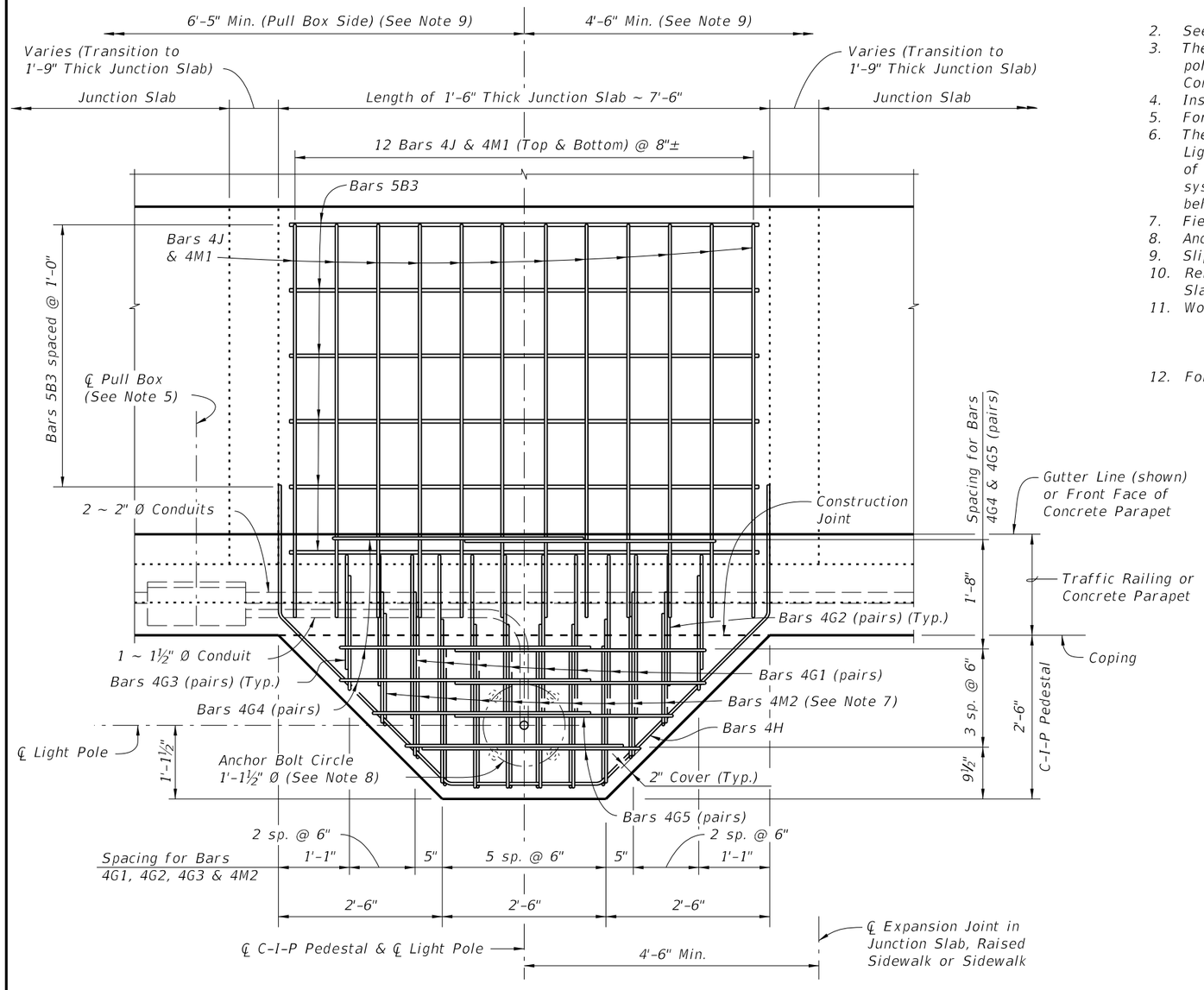

PLAN VIEW
(Junction Slab reinforcing not shown for clarity)
(Junction Slab Shown, Raised Sidewalk or Sidewalk Similar)

LIGHT PEDESTAL NOTES:

1. The pedestal and junction slab are designed to resist the following working loads from the light pole applied at the top of the Pedestal:

Axial Deadload	=	1.560 kip
Wind load Moment about Transverse Axis (*)	=	40.60 kip-ft
Wind load Moment about Longitudinal Axis (*)	=	28.30 kip-ft
Dead load Moment about Longitudinal Axis (*)	=	1.690 kip-ft
Maximum Shear	=	1.380 kip
Torsion about Pole Axis	=	3.560 kip-ft

   (*) - Axis refers to Bridge Axis.
2. See Index No. 21200 for anchor bolt design and notes.
3. The Contractor is responsible for ensuring the anchor bolt design is compatible with the light pole base plate. Modifications to the anchor bolt design must be signed and sealed by the Contractor's Specialty Engineer and submitted to the Engineer for approval prior to construction.
4. Install Anchor Bolts plumb.
5. For conduit, pull box and expansion/deflection fitting details, see Utility Conduit Detail Drawings.
6. The cost of anchor bolts, nuts, washers and anchor plates will be included in the Bid Price for Light Poles. Include the cost of all labor, concrete and reinforcing steel required for construction of the pedestals, pull boxes and miscellaneous hardware required for the completion of the electrical system in the Bid Price for either the Traffic Railing or Concrete Parapet that the pedestal is behind.
7. Field Cut Bars 4M2 as required to maintain clearance.
8. Anchor Bolt pattern orientation will be as shown.
9. Slip Forming Method of construction requires the Engineer's approval within the limits shown.
10. Reinforcing shown for light pole pedestals is in addition to typical reinforcing for C-I-P Junction Slabs and Raised Sidewalks.
11. Work this Index with the following as appropriate:
    - Index No. 6110
    - Index No. 6120
    - Index No. 6130
12. For Estimated Quantities, see Sheet No. 3.

C:\d\projects\standards\structures\2013book\06200-1of3.dgn
rd960rh
2:15:08 PM
6/28/2012

LAST REVISION	REVISION	DESCRIPTION:				
01/01/11			FDOT DESIGN STANDARDS 2013	COPING MOUNTED LIGHT POLE PEDESTAL	INDEX NO. 6200	SHEET NO. 1

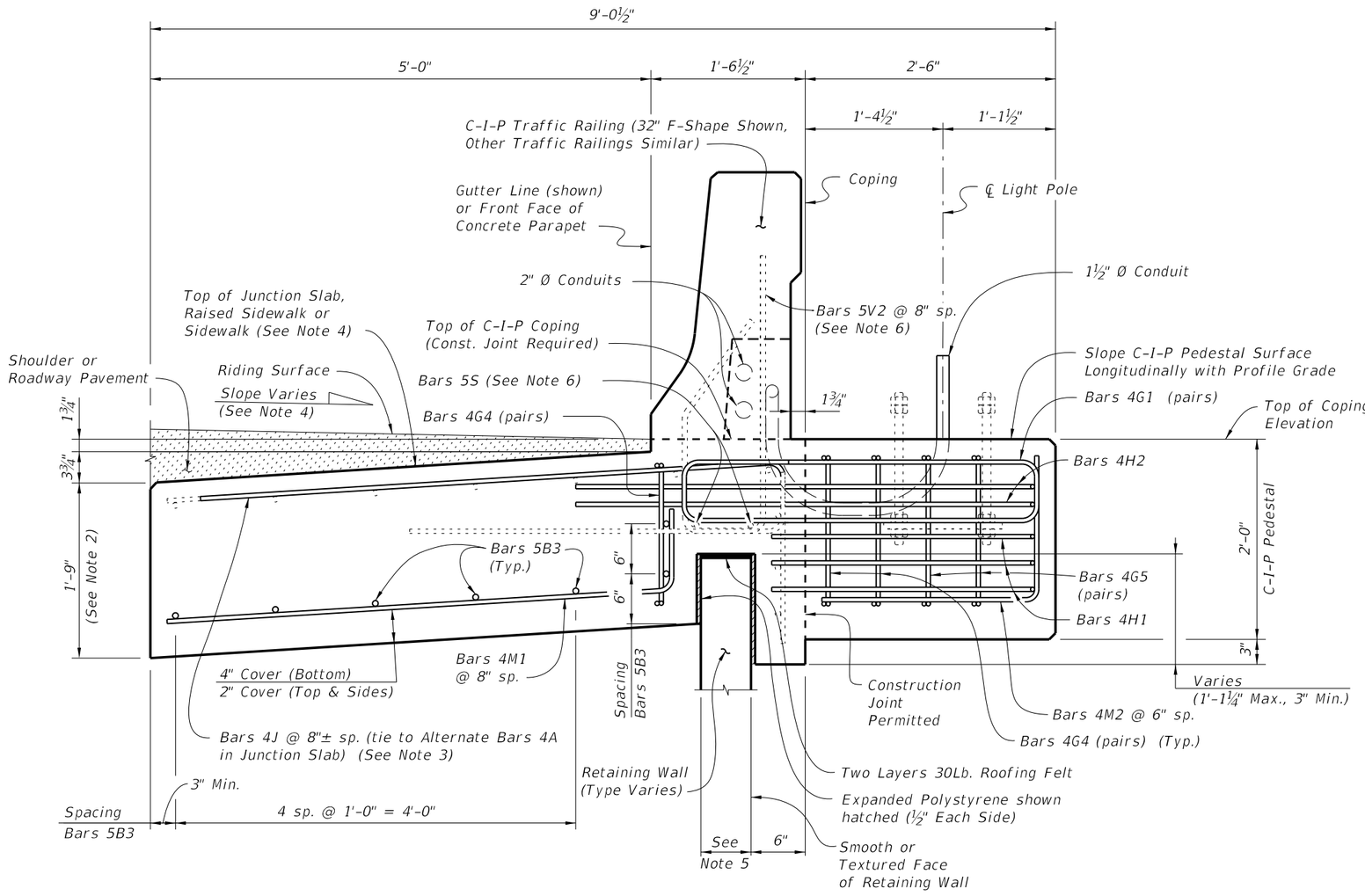

TYPICAL SECTION AT LIGHT POLE PEDESTAL
(Traffic Railing Shown, Concrete Parapet Similar)
(Junction Slab Shown, Raised Sidewalk or Sidewalk Similar)

NOTES:

1. Provide Concrete Class to match adjacent coping.
2. For junction slabs, increase the 1'-0" depth dimension to 1'-9". For sidewalks see Index No. 6130 for C-I-P Coping, but increase 6" depth dimension to 1'-6". The minimum length of the Junction Slabs, Raised sidewalks and Sidewalks is 30'-0", measured along the Gutter Line.
3. Bars 4J are only required when pedestals are behind a Traffic Railing.
4. Match the slope of the adjoining junction slab and shoulder or roadway pavement, raised sidewalk or sidewalk.
5. Actual width varies depending on type of Retaining Wall used.
6. See Index No. 6110 for Bars 5V2 and 5S.

C:\d\projects\standards\structures\2013book\06200-2of3.dgn
rd960rh
2:15:11 PM
6/28/2012

LAST REVISION	REVISION	DESCRIPTION:				
01/01/12			FDOT DESIGN STANDARDS 2013	COPING MOUNTED LIGHT POLE PEDESTAL	INDEX NO. 6200	SHEET NO. 2

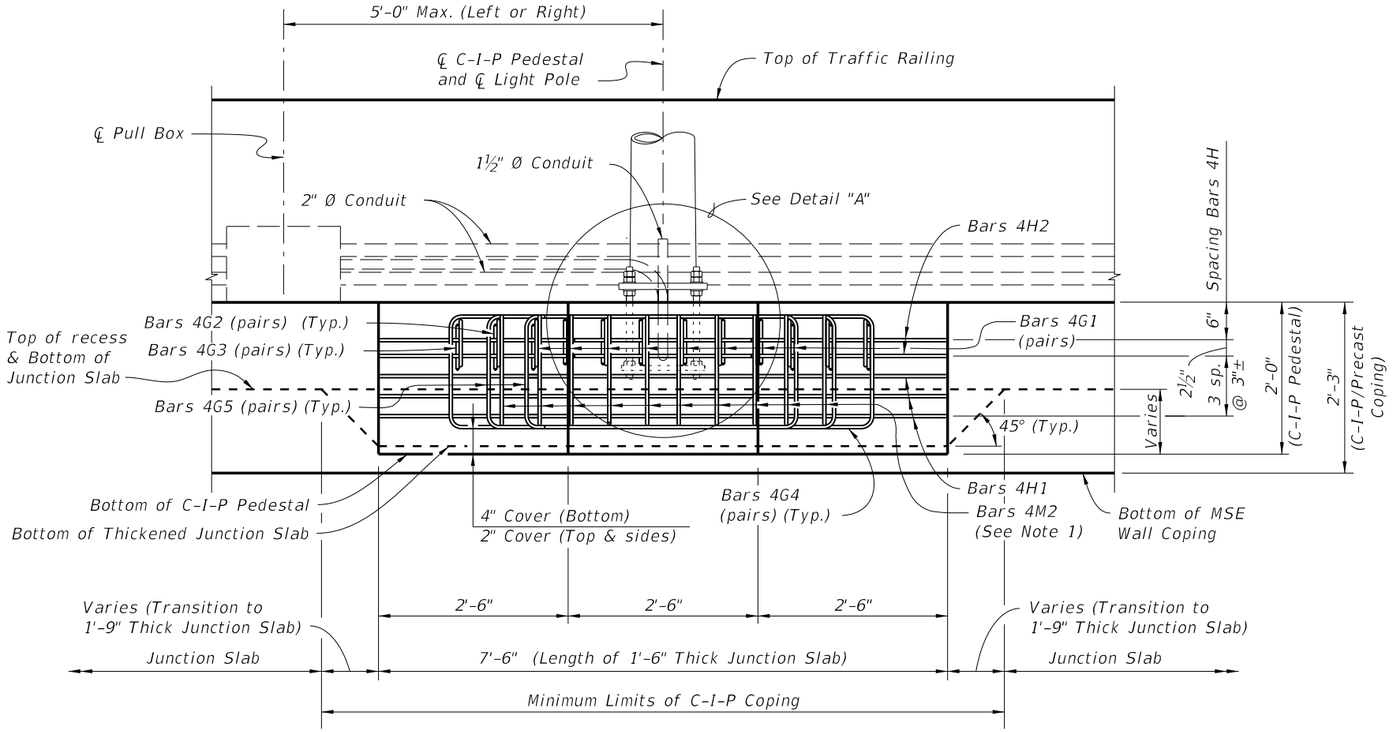

ELEVATION VIEW
(Junction Slab Reinforcing & Bars 4J not Shown for Clarity)
(Traffic Railing Shown, Concrete Parapet Similar)
(Junction Slab Shown, Raised Sidewalk or Sidewalk Similar)

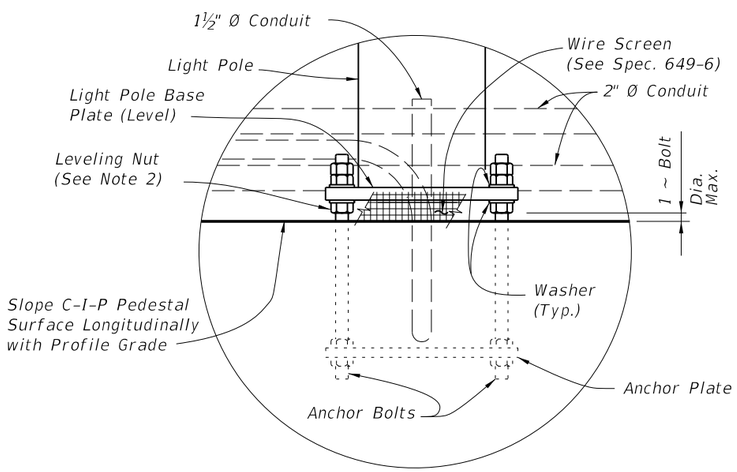

DETAIL "A"

NOTES:
1. *Field Cut Bars 4M2 as required to maintain minimum cover.*
2. *Maximum clearance between leveling nut and top of pedestal will not exceed anchor bolt diameter.*

ESTIMATED QUANTITIES		
ITEM	*UNIT*	*QUANTITY*
Concrete (Pedestal)	*CY*	*0.926*
Concrete (Thickened Junction Slab)	*CY*	*1.222*
Reinforcing Steel	*LB*	*349*

(The quantities above are for one C-I-P Light Pole Pedestal. The concrete quantity for the thickened junction slab is based on a 6" increase in thickness and a 5" wide retaining wall panel. Adjust thickened concrete quantity as required for raised sidewalks and sidewalks.)

REINFORCING STEEL BENDING DIAGRAMS - LIGHT POLE PEDESTAL

BILL OF REINFORCING STEEL			
MARK	*SIZE*	*NO. REQD.*	*LENGTH*
B3	*5*	*7*	*7'-2"*
G1	*4*	*16*	*5'-8"*
G2	*4*	*4*	*4'-8"*
G3	*4*	*4*	*4'-2"*
G4	*4*	*6*	*8'-10"*
G5	*4*	*4*	*7'-4"*
H1	*4*	*3*	*9'-8"*
H2	*4*	*2*	*13'-8"*
J	*4*	*12*	*6'-0"*
M1	*4*	*12*	*5'-10"*
M2	*4*	*10*	*3'-8"*

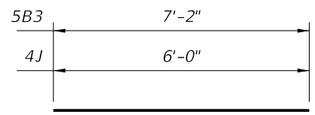

BARS 5B3 & 4J

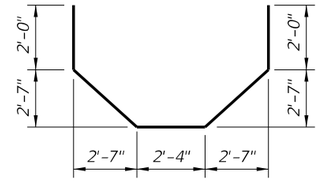

BAR 4H2

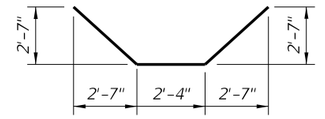

BAR 4H1

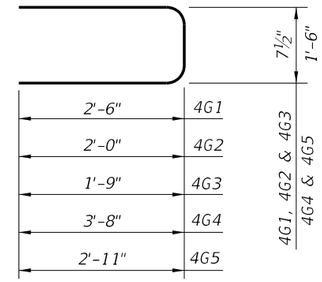

BARS 4G1, 4G2, 4G3, 4G4 & 4G5

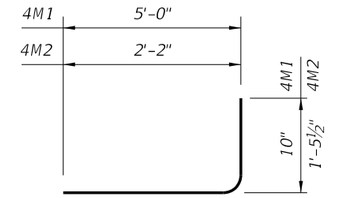

BAR 4M1 & 4M2

REINFORCING STEEL NOTES:
1. *All bar dimensions in the bending diagrams are out to out.*
2. *Lap splices for Bars 4G1, 4G2 & 4G3 will be a minimum of 1'-4". Lap splices for Bars 4G4 & 4G5 will be a minimum of 1'-8".*
3. *The Contractor may use Welded Wire Reinforcement when approved by the Engineer. Welded Wire Reinforcement will conform to ASTM A 497.*

C:\d\projects\standards\structures\2013book\06200-3of3.dgn
rd960rh
2:15:13 PM
6/28/2012

LAST REVISION	*REVISION*	*DESCRIPTION:*		*FDOT DESIGN STANDARDS 2013*	COPING MOUNTED LIGHT POLE PEDESTAL	*INDEX NO.*	*SHEET NO.*
01/01/12						*6200*	*3*

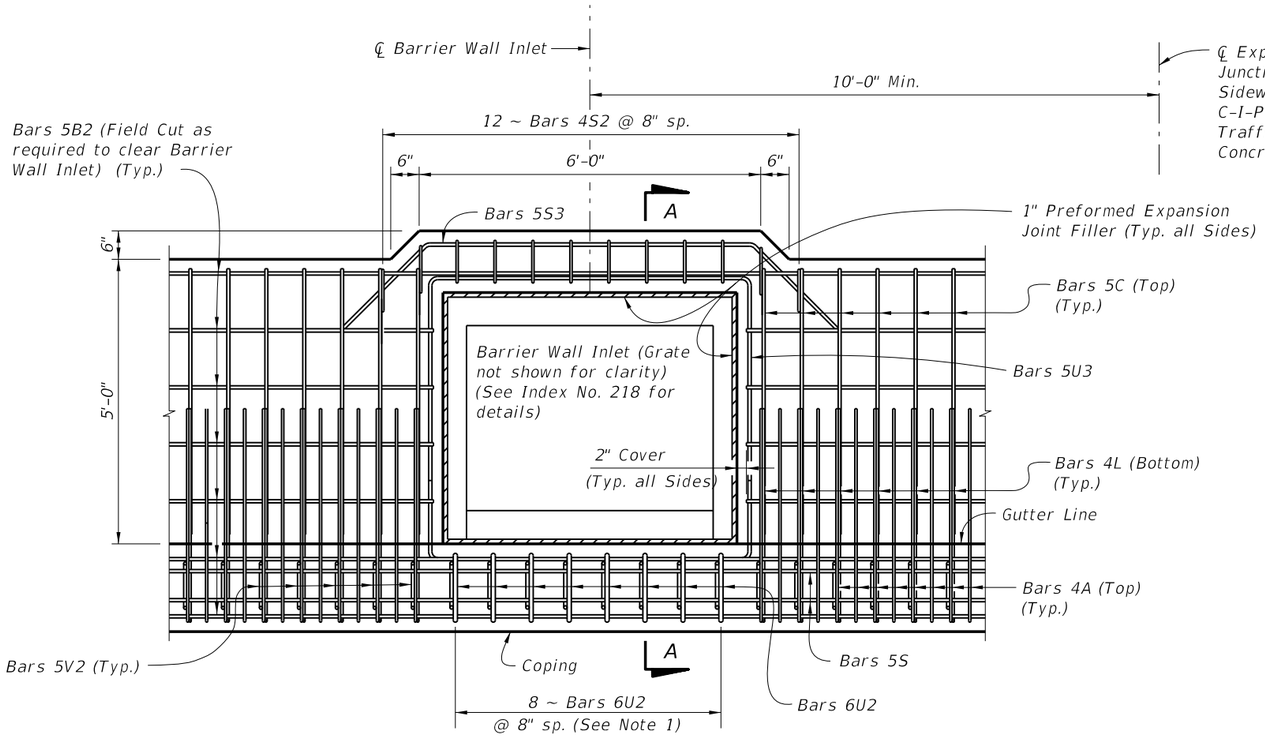

PLAN VIEW
(Junction Slab Shown, Raised Sidewalk Similar)

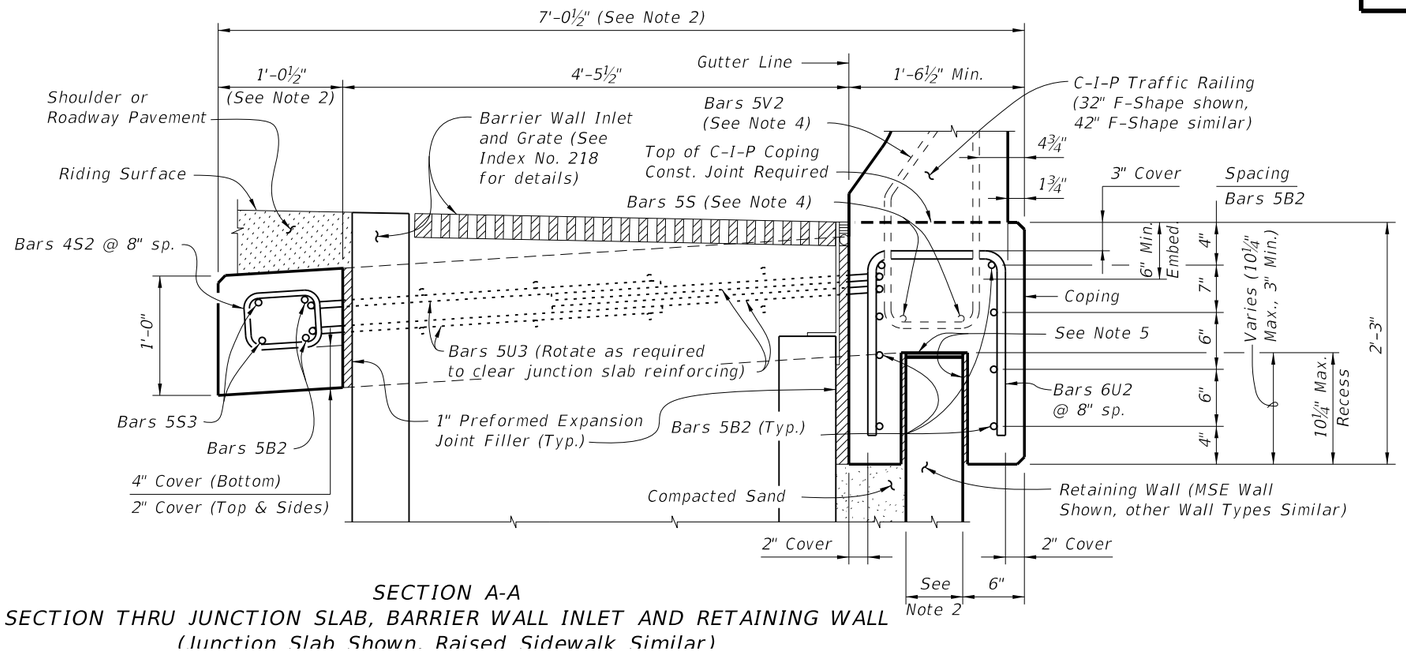

SECTION A-A
SECTION THRU JUNCTION SLAB, BARRIER WALL INLET AND RETAINING WALL
(Junction Slab Shown, Raised Sidewalk Similar)

REINFORCING STEEL BENDING DIAGRAMS - DRAINAGE

BILL OF REINFORCING STEEL			
MARK	REQD.	SIZE	LENGTH
S2	12	4	3'-1"
S3	2	5	10'-0"
U2	8	6	VARIES
U3	4	5	12'-10"

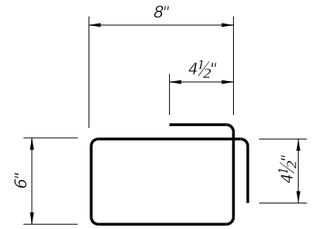

STIRRUP BAR 4S2

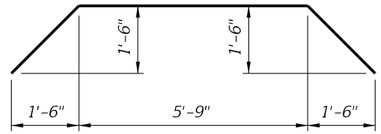

BAR 5S3

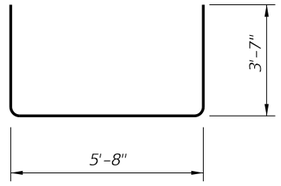

BAR 5U3

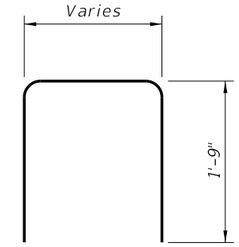

BAR 6U2

REINFORCING STEEL NOTES:
1. *All bar dimensions in the bending diagrams are out to out.*
2. *All reinforcing steel at open joints will have a 2" minimum cover.*
3. *See Index Nos. 6110, 6120 & 6130 for Bars 4A (or 5A), 5B, 5C and 4L (or 5L).*
4. *The Contractor may use Welded Wire Reinforcement when approved by the Engineer. Welded Wire Reinforcement will conform to ASTM A 497.*

NOTES:

1. *Spacing shown is along the Gutter Line. Spacing shown is for C-I-P Junction Slab. For C-I-P Raised Sidewalks or Sidewalks, match bar spacing and size shown in Typical Sections (i.e., 11 ~ Bars 5U2 and 15 ~ Bars 4S2 @ 6" spacing for Raised Sidewalks).*
2. *Dimensions shown are for junction slab. Increase width as required for C-I-P Raised Sidewalk and Sidewalks.*
3. *Actual location & width vary depending on type of Retaining Wall used.*
4. *See Index No. 6110 for Bars 5V2 and 5S.*
5. *Two Layers 30Lb. Roofing Felt (Top) & Expanded Polystyrene shown hatched (½" Each Side).*
6. *Locate ℄ Barrier Wall Inlet a minimum of 10'-0" away from ℄ Expansion Joints in Junctions Slab, Raised Sidewalk or Sidewalk, C-I-P Coping and Traffic Railing or Concrete Parapet.*
7. *Work this Index with the following as appropriate:*
   Index No. 6110
   Index No. 6120
   Index No. 6130

LAST REVISION	REVISION	DESCRIPTION:				
01/01/12			FDOT DESIGN STANDARDS 2013	JUNCTION SLAB AT DRAINAGE INLET OPENINGS	INDEX NO. 6201	SHEET NO. 1

6/28/2012 2:15:16 PM rd960rh C:\d_projects\standards\structures\2013book\06201-1of1.dgn

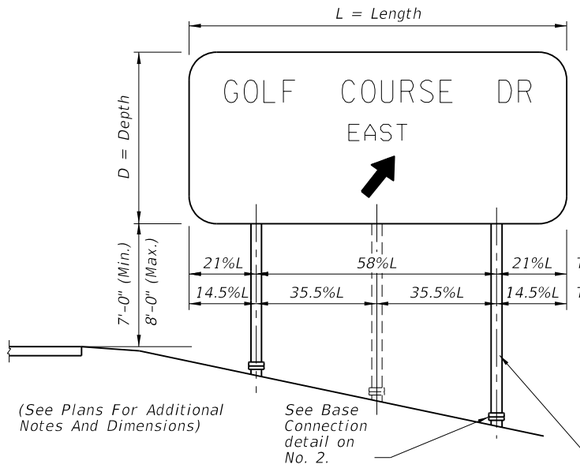

TYPICAL ELEVATION

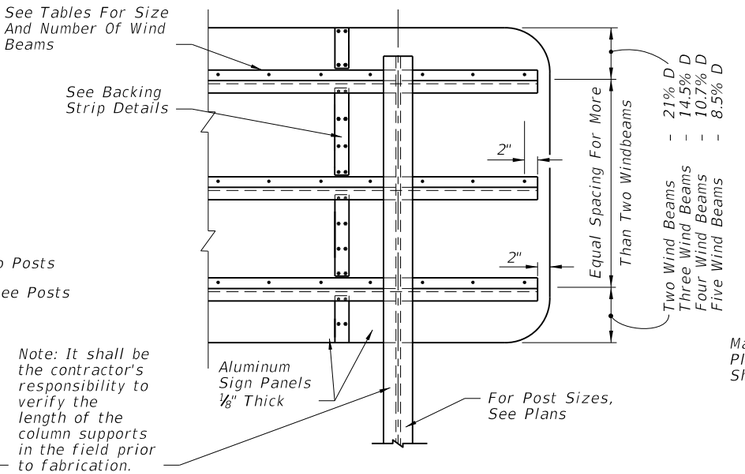

PARTIAL REAR ELEVATION

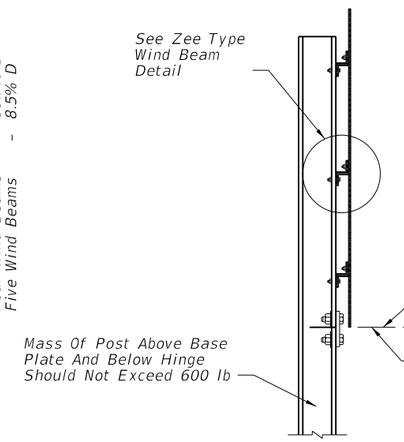

SIDE VIEW

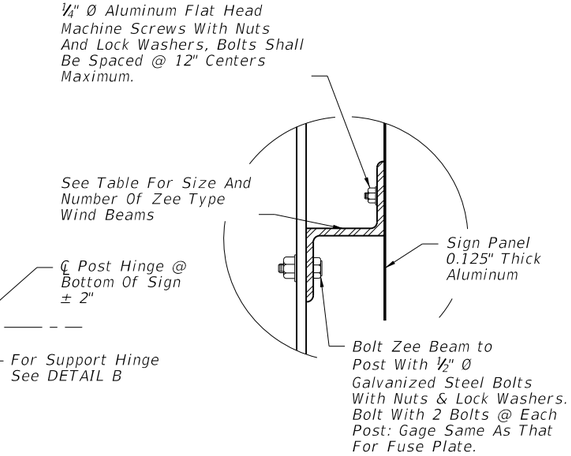

ZEE TYPE WIND BEAM

Note: If the sign panels are deeper than 10', a Horizontal Panel Splice is allowed at an interior Zee Beam, shop drawings shall be required. Minimum panel section width =2'-6".

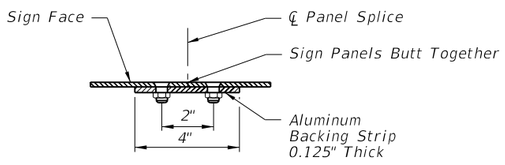

BACKING STRIP DETAILS

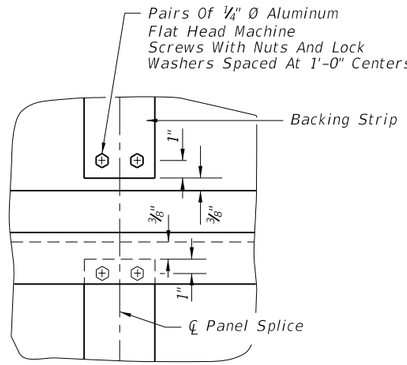

NUMBER OF WIND BEAMS FOR GIVEN DEPTH & WIND

Wind	No. Beams	Max. Depth	Wind	No. Beams	Max. Depth
110	2	7'-0"	150	2	6'-0"
110	3	12'-0"	150	3	10'-4"
110	4	16'-4"	150	4	14'-0"
110	5	20'-8"	150	5	17'-8"
130	2	6'-8"			
130	3	11'-4"			
130	4	15'-4"			
130	5	19'-0"			

SIZE OF WIND BEAMS

Size Of Zee*	Length Of Sign (Feet)	
	2 Posts	3 Posts
Zee 1.75 x 1.75 x 1.08	0 - 11'-0"	0 - 17'-4"
Zee 3 x 2.69 x 2.33	11'-1"-19'-0"	17'-5"-29'-6"
Zee 3 x 2.69 x 3.38	19'-1"- 20'-8"	29'-7"-31'-6"

*Note: Zee Beams Are Aluminum - No Steel Equivalent Available Designation Gives (Member Depth) x (Flange=Width) x (lb/ft)

DESIGN WIND SPEEDS BY COUNTY

110 mph Alachua, Baker, Bradford, Clay, Columbia, Gadsden, Gilchrist, Hamilton, Hardee, Jackson, Jefferson, Lafayette, Lake, Leon, Madison, Marion, Polk, Putnam, Sumter, Suwannee, and Union Counties.

130 mph Bay, Brevard, Calhoun, Charlotte, Citrus, DeSoto, Dixie, Duval, Flagler, Franklin, Glades, Gulf, Hendry, Hernando, Highlands, Hillsborough, Holmes, Lee, Levy, Liberty, Manatee, Nassau, Okaloosa, Okeechobee, Orange, Osceola, Pasco, Pinellas, Sarasota, Seminole, St. Johns, Taylor, Volusia, Wakulla, Walton, and Washington Counties.

150 mph Broward, Collier, Escambia, Indian River, Martin, Miami-Dade, Monroe, Palm Beach, Santa Rosa, and St.Lucie Counties.

GENERAL NOTES

DESIGN SPECIFICATIONS: Design according to FDOT Structures Manual (current edition).

WELDING: Preform all welding in accordance with the American Welding Society Structural welding code (Steel), ANSI/AWS D1-1 current edition.

ALUMINUM MATERIALS: All aluminum materials shall meet the requirements of the Aluminum Association's Alloy 6061-T6 and also the following ASTM specifications: Sheets and plates, B209; extruded tube, bars, rods & shapes, B221; and standard structural shapes, B308. No stenciling permitted on sheets. Aluminum welding rods shall meet the requirements of Aluminum Association Alloy No. 5556 filler wire.

ALTERNATE MATERIAL: Material meeting the requirements of ASTM B209 or Aluminum Association Alloys5154-H38 or 5052-H38 may be used for sheet and plate. Material meeting the requirements of Aluminum Association Alloy 6351-T5 and ASTM B221 may be used for extruded bars, rods, shapes and tubes.

SIGN FACE: All sign face corners shall be rounded.

STRUCTURAL STEEL: All structural steel shall meet the requirements of ASTM A36 and shall be galvanized in accordance with ASTM A123.

ALUMINUM BOLTS, NUTS, & LOCK WASHERS: Aluminum bolts shall meet the requirements of Aluminum Association Alloy 2024-T4 (ASTM F468). The bolts shall have an anodic coating at least 0.0002" thick and be Chromate sealed. Lock washers shall meet the requirements of Aluminum Association Alloy 7075-T6 (ASTM B221). Nuts shall meet the requirements of Aluminum Association Alloy 6061-T6 or 6262-T9 (ASTM F467).

STEEL BOLTS, NUTS, & WASHERS: All steel bolts, nuts and washers shall meet the requirements of ASTM A325 and shall be galvanized in accordance with ASTM F2329.

BASE CONNECTION: High strength bolts L_2 in the base connection shall be tightened only to the torque shown in the table on sheet 2. Overtightened base connections will not be permitted.

FUSE PLATE: All holes in fuse plates shall be drilled. All plate cuts shall, preferably, be saw cuts; however, flame cutting will be permitted provided all edges are round. Metal projecting beyond the plane of the plate face will not be permitted.

BRASS SHIM: Provide shim plate per ASTM B36.

SHOP DRAWINGS: When ground sign supports are fabricated in accordance with these plans no shop drawings are required. Shop drawings will be required for approval when the column length exceeds the length shown in the plans by more than 2'-0".

FABRICATOR NOTE: All bolts, except L_2 bolts and Zee Beam to post bolts, shall be tightened in accordance with Section 700 of the Specifications.

FOUNDATION: Contractor may use precast foundations in pre-drilled holes a minimum of 12" larger than the foundation indicated on the plans in either wet or dry conditions. The holes shall be clean and without loose material. Temporary casing shall be required if the soil is unstable. Fill the void around the precast foundation with flowable fill meeting the requirements of Section 121 or clean sand placed using hydraulic methods. The cost of flowable fill, installing and removal of casing shall be included in the unit price of Sign Multi-Post.

C:\d\projects\standards\roadway\11000-s\11200-01.dgn
rd960rh
2:15:18 PM
6/28/2012

LAST REVISION	REVISION	DESCRIPTION:				
01/01/12			FDOT DESIGN STANDARDS 2013	MULTI-COLUMN GROUND SIGN	INDEX NO. 11200	SHEET NO. 1

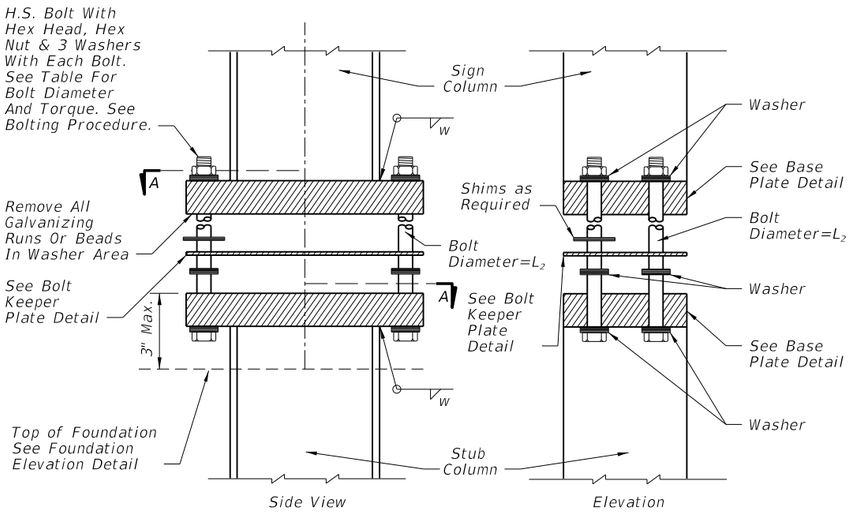

SIGN COLUMN & STUB COLUMN VIEWS

BASE CONNECTION

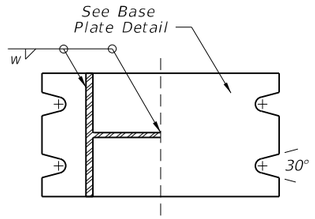

SECTION A-A

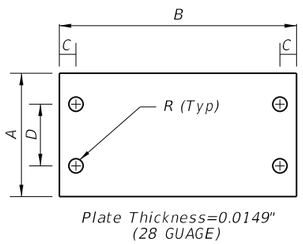

BOLT KEEPER PLATE

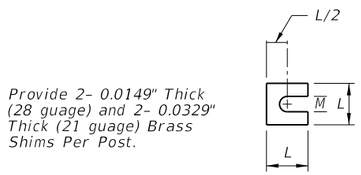

SHIM DETAIL

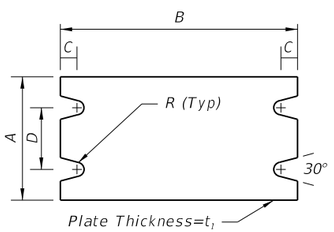

BASE PLATE

Direction of Traffic

Flange Holes For Fuse And Hinge Plate Shall Be Drilled Or Sub-Punched and Reamed. H.S. Bolts (See Table For Size), For Bolt Tension See the Specification. Flat Washers (Typ.)

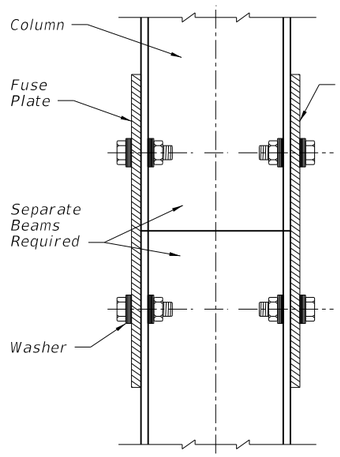

OPTIONAL HINGE

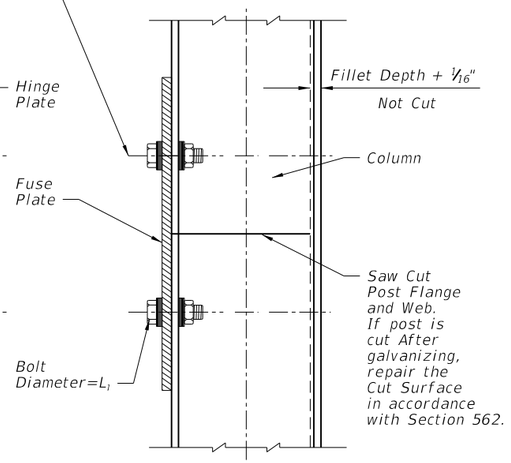

TYPICAL HINGE

DETAIL B

(See Fabricator Note on Sheet 1)

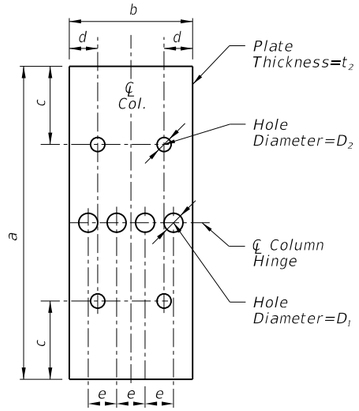

FUSE PLATE

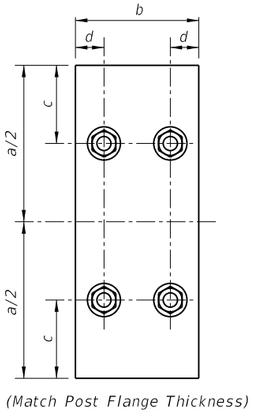

(Match Post Flange Thickness)

HINGE PLATE

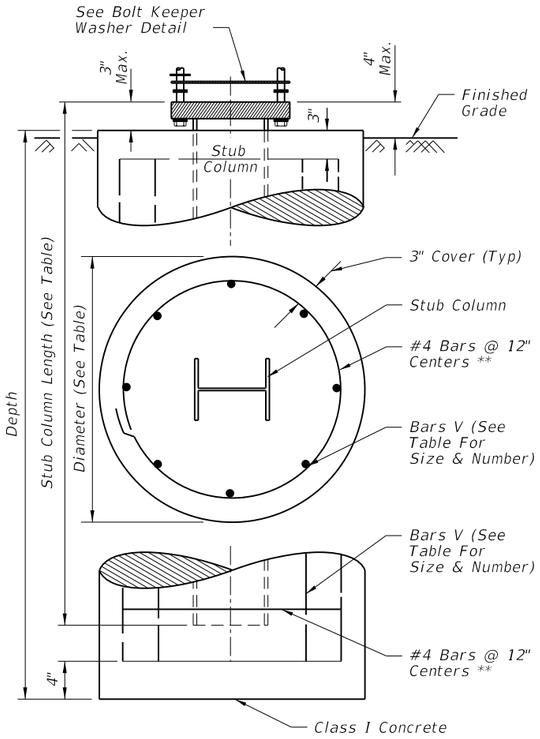

FOUNDATION ELEVATION

NOTE: All Reinforcing To Be Grade 60.

** At the Option of the Contractor, D10 Spiral Wire @ 6" Pitch,Three Flat Turns Top and One Flat Turn Bottom may be Utilized in Lieu of Specified.

Shop-weld assemblies of foundation stirrup reinforcing bars are permitted in reinforced concrete foundation provided that:

1. The reinforcing bars conform to ASTM Specification A706/706M.
2. The holding wires conform to ASTM Specification A1064.
3. The Shop welding is performed by machines under a continuous, controlled process, approved by the Engineer.
4. Quality control test are performed on shop welded specimens and the test results are available, upon request, to the Engineer.

PROCEDURE FOR ASSEMBLY OF BASE CONNECTION

1. Assemble post to stub with bolts and flat washers as shown.
2. Shim as required to plumb post (see shim detail).
3. Tighten all L_2 bolts the maximum possible with 1'-0" to 1'-3" wrench to bed washers and shims and to clean bolt threads.
4. Burr threads at junction with nut using a center punch to prevent nut loosening.

BASE CONNECTION DATA										FUSE (HINGE) PLATE DATA									SHIM		FOUNDATION DATA			
Section*	A	B	C	D	R	t_1	L_2	w	Torque (lbf*in)	a	b	c	d	e	t_2	D_1	D_2	L_1	L	M	Dia.	Depth	Stub Length	Reinf. Bars V
S 3x5.7	4"	7"	3/4"	2"	5/16"	1"	1/2"	1/4"	90 ± 20	7-1/4"	2-3/8"	1-1/4"	1/2"	9/16"	3/8"	7/16"	9/16"	1/2"	1-1/4"	9/16"	2'-0"	4'-0"	3'-0"	10-#6
W 6x12	4"	10"	3/4"	2"	3/8"	1-5/8"	5/8"	1/4"	270 ± 45	7-1/4"	4"	1-1/4"	7/8"	15/16"	3/8"	13/16"	11/16"	5/8"	1-3/8"	11/16"	2'-0"	6'-0"	3'-0"	10-#6
W 8x18	5-1/4"	11-1/4"	7/8"	2-3/4"	7/16"	1-3/4"	3/4"	3/8"	445 ± 75	8-1/4"	5-1/4"	1-3/8"	1-1/8"	1-1/4"	3/8"	1"	13/16"	3/4"	1-3/4"	13/16"	2'-4"	7'-6"	4'-0"	8-#8
W 8x24	6-1/2"	12-1/2"	7/8"	3-1/4"	7/16"	1-3/4"	3/4"	3/8"	445 ± 75	8-1/4"	6-1/2"	1-3/8"	1-1/2"	1-1/2"	1/2"	1"	13/16"	3/4"	2-1/8"	13/16"	2'-4"	8'-6"	4'-0"	8-#8
W 10x33	8"	16"	1-1/4"	4-3/4"	9/16"	2"	1"	1/2"	580 ± 90	9-1/4"	8"	2"	1-3/4"	1-3/4"	5/8"	1-1/8"	1-1/16"	1"	2-3/8"	1-1/16"	2'-4"	10'-3"	4'-0"	8-#8
W 12x45	10"	18"	1-1/4"	6"	9/16"	2"	1"	1/2"	580 ± 90	11"	8"	2"	1-3/4"	1-3/4"	3/4"	1-5/16"	1-1/16"	1"	2-3/4"	1-1/16"	2'-8"	11'-3"	5'-0"	10-#8

* Designations: Normal Depth in inches and weight in pounds per linear foot.

STEEL POST, BASE, FOUNDATION & FUSE PLATE DETAILS

LAST REVISION	REVISION	DESCRIPTION:	FDOT DESIGN STANDARDS 2013	MULTI-COLUMN GROUND SIGN	INDEX NO.	SHEET NO.
07/01/12					11200	2

C:\d\projects\standards\roadway\11000-s\11200-02.dgn rd960rh 2:15:20 PM 6/28/2012

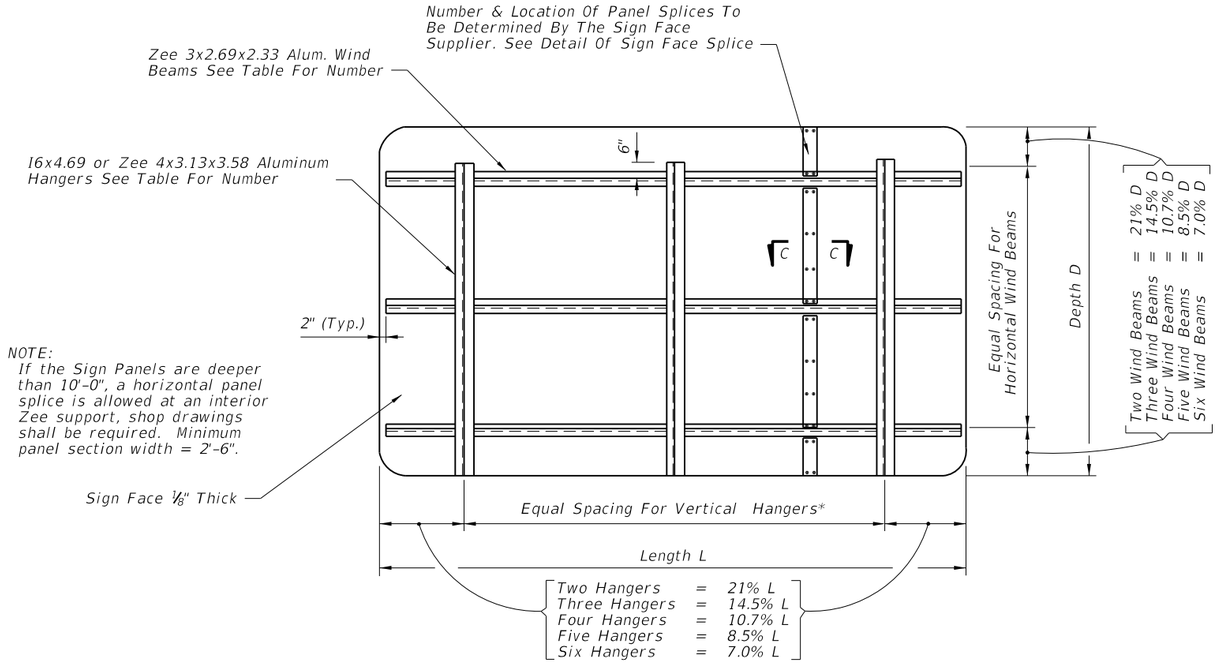

*Note: Spacing of vertical hangers may be varied slightly or as necessary to clear the truss struts and diagonals at panel points.

TYPICAL SIGN FACE ELEVATION FOR OVERHEAD TRUSS

Number Of Zee 3x2.69x2.33 Horiz. Wind Beams For Sign Depth And Wind			Number Of I6x4.69 or Zee 4x3.13x3.58 Vertical Hanger Beams For Sign Length				
Wind M.P.H.	No. Beams	Max. Depth	2 Hangers	3 Hangers	4 Hangers	5 Hangers	6 Hangers
			Max Length	Max Length	Max Length	Max Length	Max Length
150	2	5'	15'	30'	45'	X	X
150	3	9'	15'	30'	45'	X	X
150	4	12'	15'	22'	30'	38'	45'
150	5	15'	15'	22'	30'	38'	45'
150	6	18'	15'	22'	30'	38'	45'
130	2	5'	15'	30'	45'	X	X
130	3	9'	15'	30'	45'	X	X
130	4	12'	15'	22'	30'	38'	45'
130	5	15'	15'	22'	30'	38'	45'
130	6	18'	15'	22'	30'	38'	45'
110	2	5'	15'	30'	45'	X	X
110	3	9'	15'	30'	45'	X	X
110	4	12'	15'	30'	38'	45'	X
110	5	15'	15'	30'	38'	45'	X
110	6	18'	15'	30'	38'	45'	X

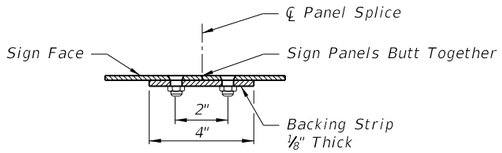

SECTION C-C

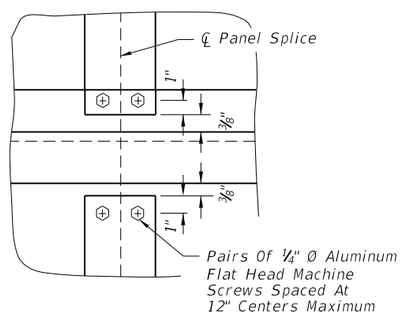

BACKING STRIP DETAIL

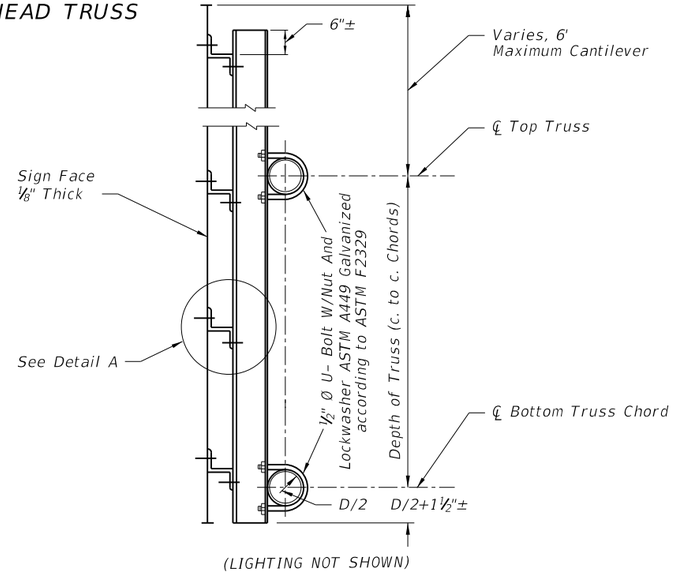

(LIGHTING NOT SHOWN)

TYPICAL DETAIL OF SIGN & TRUSS CONNECTION

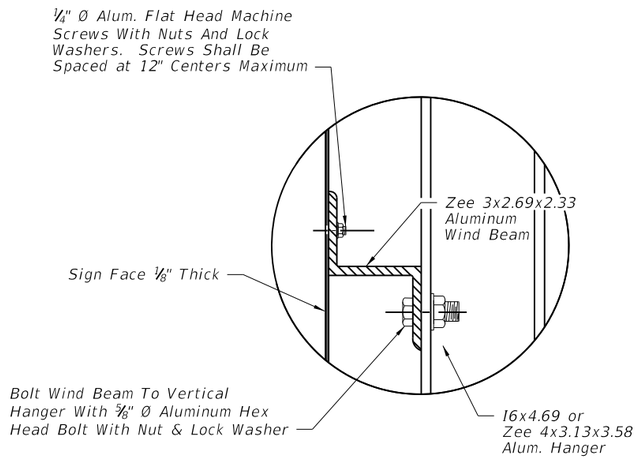

(SHOWING ATTACHMENT OF SIGN FACE PANEL TO VERTICAL HANGER SUPPORTS, VERTICAL I SHAPE HANGER AS SHOWN, Zee SHAPE OPTIONAL)

DETAIL A

GENERAL NOTES

1. For "General Notes" covering Material Specifications see Index 11200.
2. Design based on 32 ft. maximum height to centroid of sign panel.
3. The Design Wind Speed shall conform to Wind Speed by County shown on Index 11200, Sheet 1.

DETAILS OF SIGN FACE & TRUSS CONNECTION

LAST REVISION	REVISION	DESCRIPTION:		FDOT DESIGN STANDARDS 2013	STEEL OVERHEAD SIGN STRUCTURES	INDEX NO.	SHEET NO.
01/01/10						11300	1

C:\d\projects\standards\roadway\11000-s\11300-01.dgn rd960rh 2:15:23 PM 6/28/2012

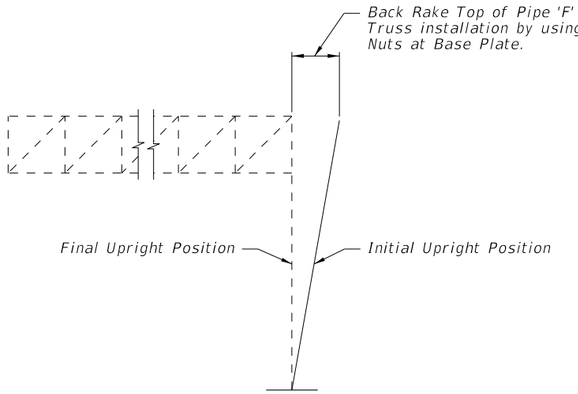

CAMBER DIAGRAM

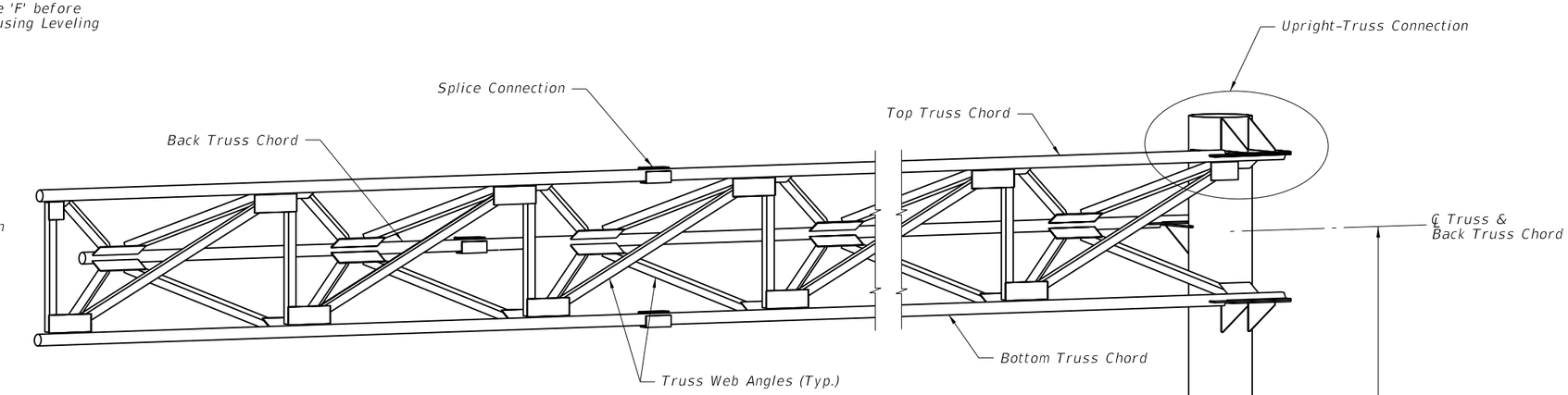

CANTILEVER SIGN STRUCTURE NOTES

1. Design according to FDOT Structures Manual. Alternate Designs are not allowed.
2. Submit shop drawings for all work. Include:
   a. Field verification of all upright heights.
   b. Foundation elevations necessary to insure minimum vertical clearances as per traffic plans.
   c. Anchor bolt orientation with respect to centerline of truss and the direction of traffic.
   d. Show chord splices a minimum distance of 2 truss panel lengths apart. "SD" Panel from upright is the closest panel in which a chord splice may be used. See plans for Cantilever Sign Structure Data Table. Upright splices are not allowed.
3. Shop Fabrication, Assembly, Handling and Shipping:
   a. Do not begin fabrication before receiving shop drawing approval.
   b. Welding: Conform to American Welding Society Structural Welding Code (Steel) ANSI/AWS D1. 1 (current edition).
   c. Shop assemble the entire structure after galvanizing and prior to shipment.
   d. If necessary, disassemble and secure components for shipment.
4. Sign Structure Materials:
   a. Upright and Chords (Steel Pipe): API -5L-X42 (42 ksi yield) or ASTM A500, Grade B.
   b. Steel Angles: ASTM A 709, Grade 36.
   c. Steel Plates: ASTM A 709, Grade 36.
   d. Weld Metal: E70XX.
   e. Bolts: ASTM A325 Type 1, (install per Specification Section 700) with single, self-locking nuts.
   f. Anchor Bolts: ASTM F1554, Grade 55 with ASTM A563 Grade A heavy-hex double nuts.
   g. Install all nuts per manufacturer's instructions.
   h. Bolt hole diameters: equal to the bolt diameter plus $\frac{1}{16}$".
   i. Anchor bolt hole diameters: equal to the bolt diameter plus $\frac{1}{2}$".
   j. Use of split lock washers is not permitted.
5. Galvanization; Nuts, bolts and washers: ASTM F2329. Other steel items: ASTM A123
6. Sign Panels: Aluminum. See Elevation drawing for sizes and locations.
7. Foundation Materials:
   a. Reinforcing Steel: ASTM A615, Grade 60.
   b. Concrete: Class IV, minimum 5.5 ksi compressive strength at 28-days for all environmental classifications for Spread Footing.
      Class IV (Drilled Shaft), minimum 4.0 ksi compressive strength at 28-days for all environmental classifications for Drilled Shaft.
8. Construct the Sign Structure foundation in accordance with FDOT Specification Section 455.
9. Prior to erection, record the as-built anchor locations and provide to the Engineer.
10. After placement of the upright and prior to installation of the truss, adjust the leveling nuts beneath the base plate to achieve the back rake shown on the Camber Diagram.
11. Place backfill above the footing prior to installation of the sign panels. Do not remove or reduce in height without prior approval of the Engineer.
12. Install sign panels as shown on the Elevation drawing.
13. Verify CSL access tubes will not interfere with anchor bolt installation before excavating the shaft. When CSL access tube locations conflict with anchor bolt locations, move the CSL access tube location ± two inches along the inner circumference of the reinforcing cage. Notify the Engineer before excavating the shaft if the CSL access tube locations cannot be moved out of conflict with anchor bolt locations.
14. Handhole at pole base is required for DMS Structures. See Index 18300 for details.

ISOMETRIC VIEW

* NOTE: Contractor shall verify these Dimensions prior to Fabrication of Upright.

NOTE: See Plans for Cantilever Sign Structure Data Table.

C:\d\projects\standards\roadway\11000-s\11310-01.dgn
rd960rh
2:15:25 PM
6/28/2012

LAST REVISION	REVISION	DESCRIPTION:			INDEX NO.	SHEET NO.
07/01/10			FDOT DESIGN STANDARDS 2013	CANTILEVER SIGN STRUCTURE	11310	1

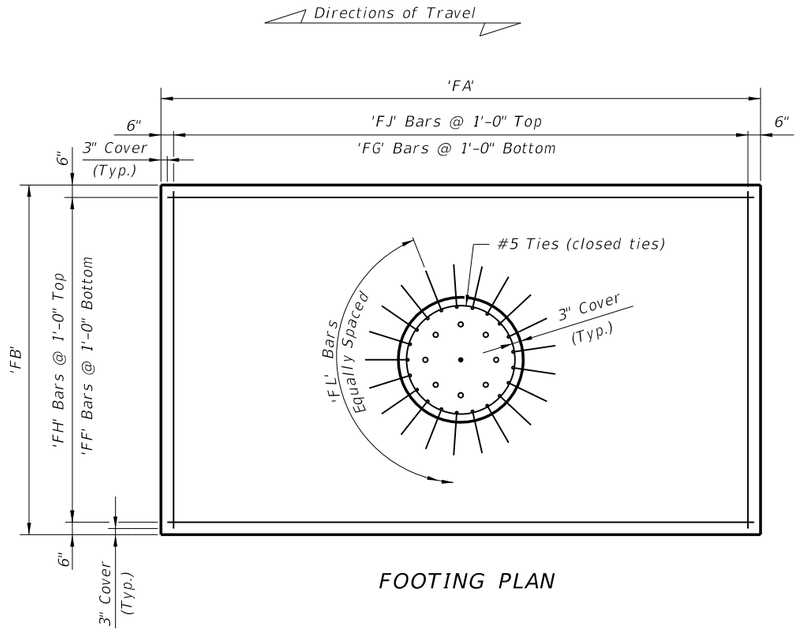

FOOTING PLAN

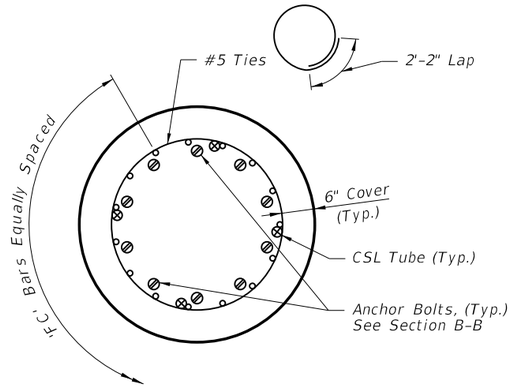

PLAN VIEW
DRILLED SHAFT

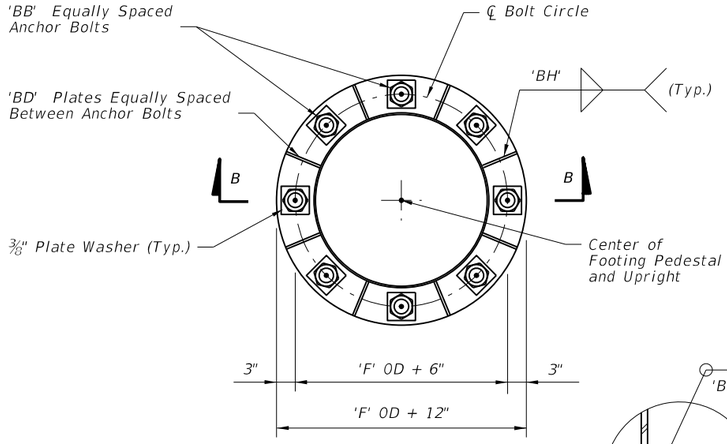

PLAN VIEW
(Base Plate)

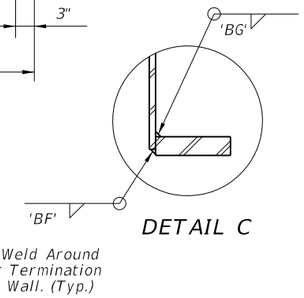

DETAIL C

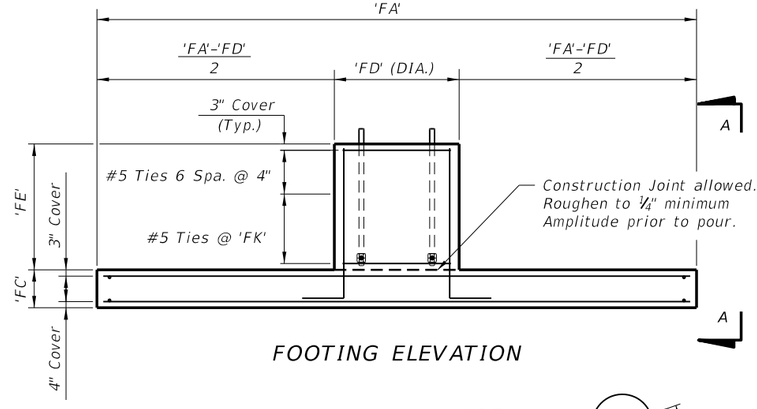

FOOTING ELEVATION

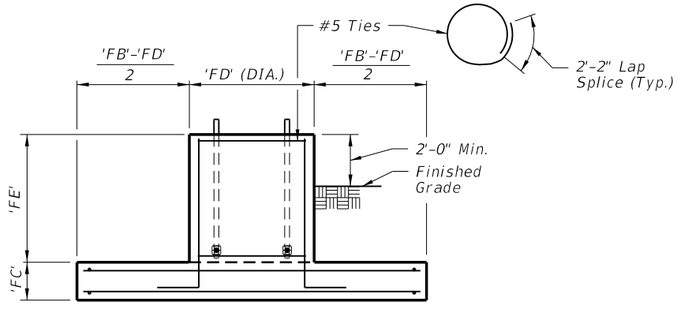

VIEW A-A

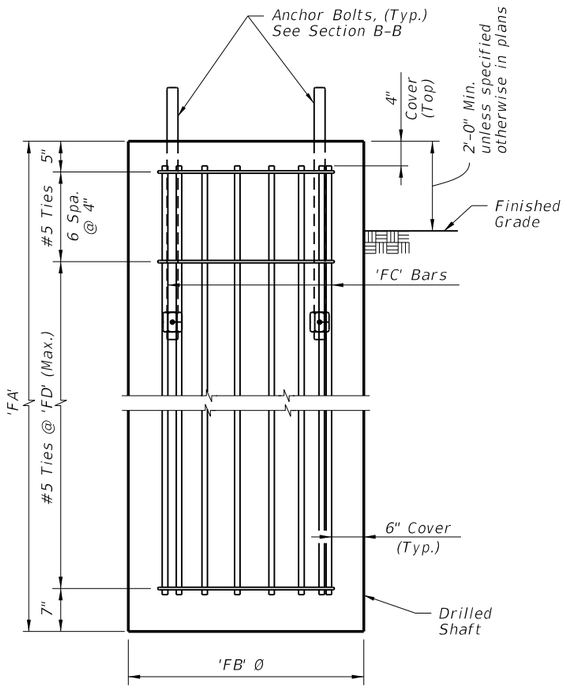

ELEVATION
DRILLED SHAFT
(Alternate Foundation)

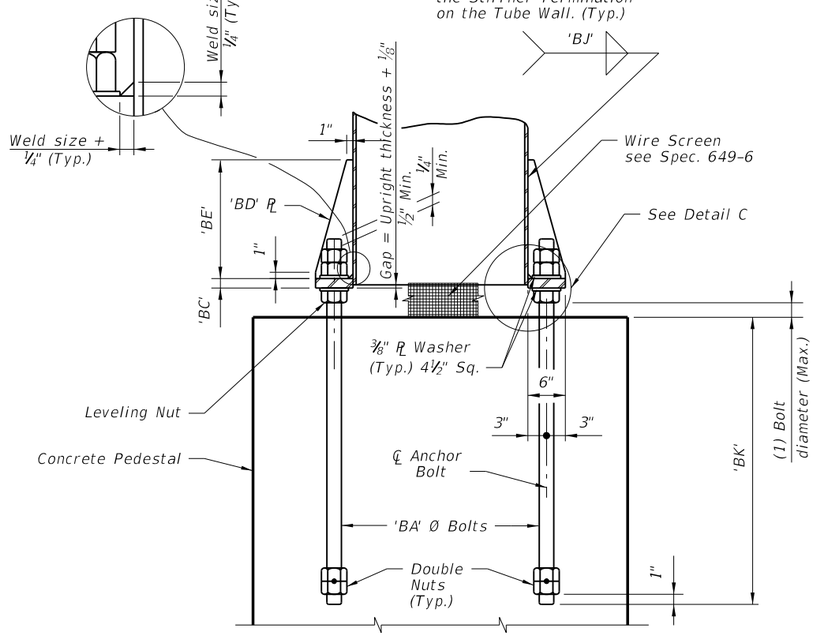

SECTION B-B

C:\d\projects\standards\roadway\11000-s\11310-02.dgn rd960rh 2:15:27 PM 6/28/2012

LAST REVISION	REVISION	DESCRIPTION:			INDEX NO.	SHEET NO.
07/01/12			FDOT DESIGN STANDARDS 2013	CANTILEVER SIGN STRUCTURE	11310	2

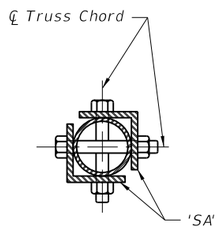

SECTION D-D

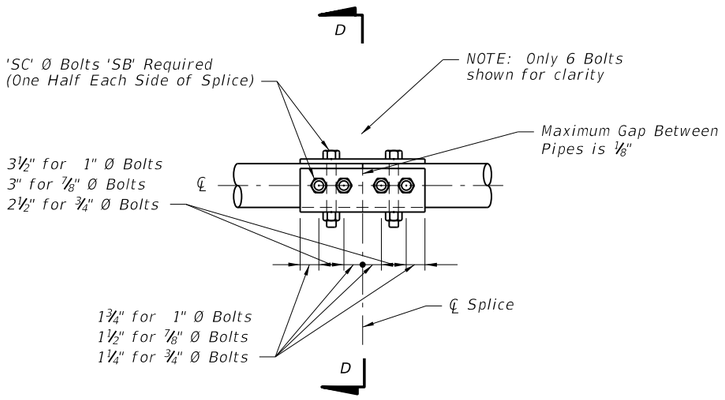

SPLICE CONNECTION DETAIL
(For trusses longer than 36')

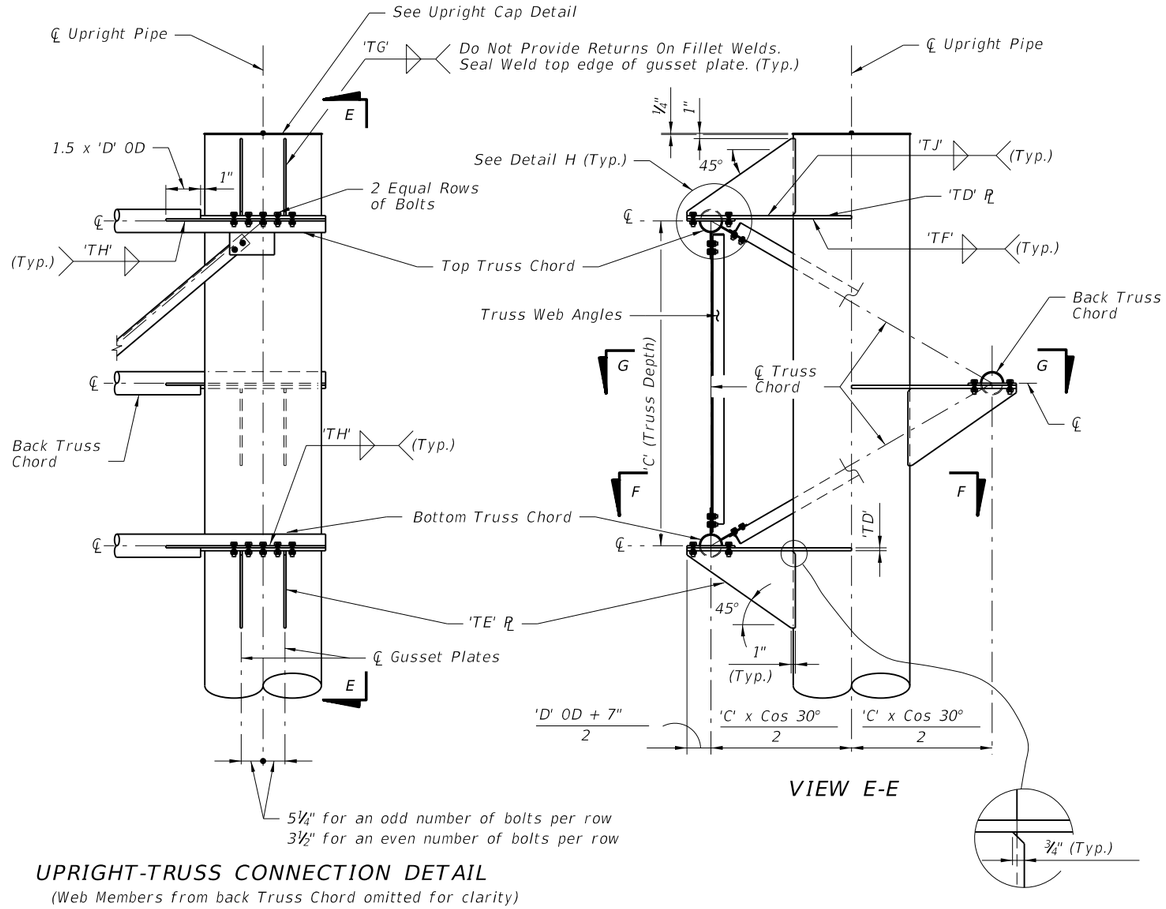

UPRIGHT-TRUSS CONNECTION DETAIL
(Web Members from back Truss Chord omitted for clarity)

VIEW E-E

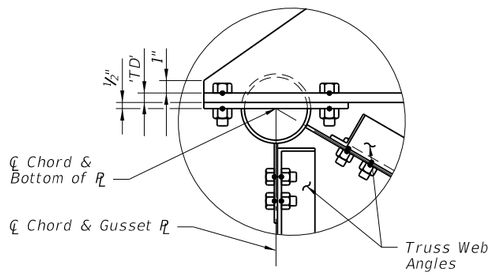

DETAIL H

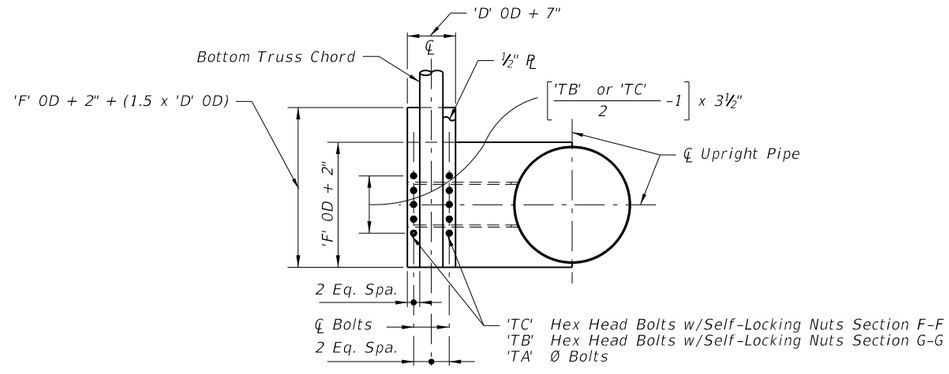

SECTION F-F, SECTION G-G SIMILAR
(With Gusset Plate & Angles omitted for clarity)

NOTE:
Abbreviation
OD ~ Outside Diameter

6/28/2012 2:15:30 PM rd960rh C:\d\projects\standards\roadway\11000-s\11310-03.dgn

LAST REVISION	REVISION	DESCRIPTION:		FDOT DESIGN STANDARDS 2013	CANTILEVER SIGN STRUCTURE	INDEX NO.	SHEET NO.
07/01/10			STATE OF FLORIDA DEPARTMENT OF TRANSPORTATION			11310	3

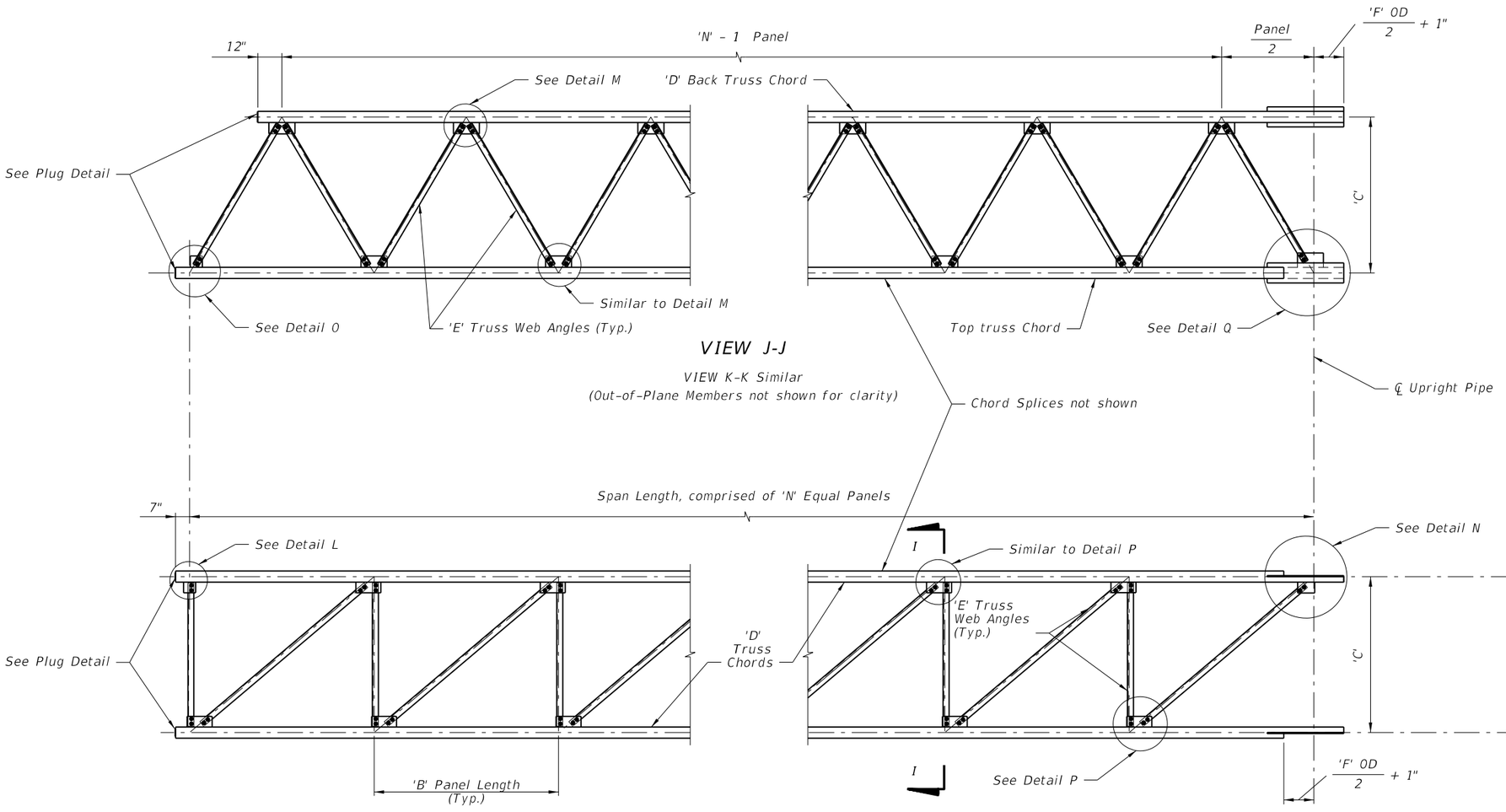

VIEW J-J

VIEW K-K Similar
(Out-of-Plane Members not shown for clarity)

SECTION I-I

FRONT OF TRUSS ELEVATION

(Back Truss Chord and attached Angles not shown for clarity)

NOTE:
Abbreviation
OD ~ Outside Diameter

C:\d\projects\standards\roadway\11000-s\11310-04.dgn
rd960rh
2:15:32 PM
6/28/2012

LAST REVISION	REVISION	DESCRIPTION:		FDOT DESIGN STANDARDS 2013	CANTILEVER SIGN STRUCTURE	INDEX NO.	SHEET NO.
07/01/05						11310	4

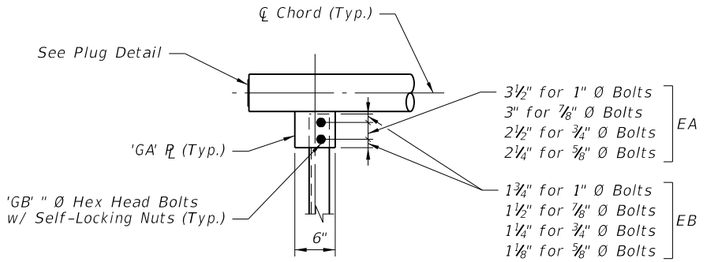

DETAIL L

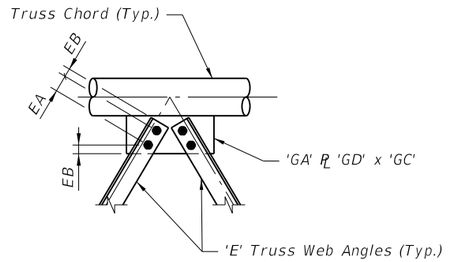

DETAIL M

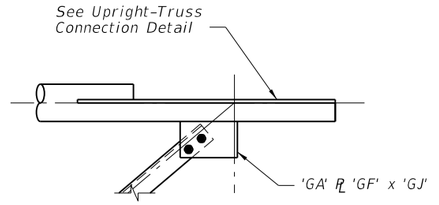

DETAIL N

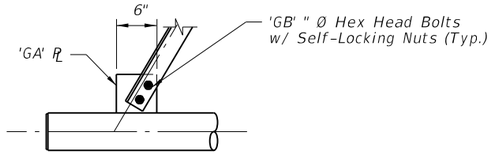

DETAIL O

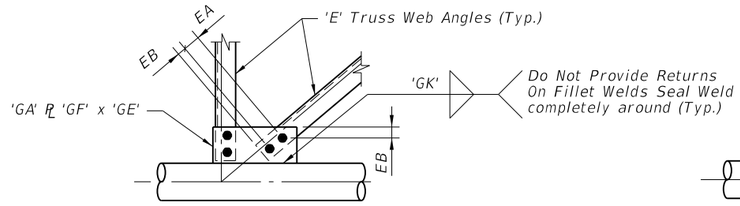

DETAIL P

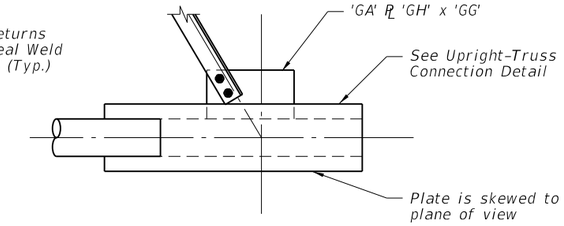

DETAIL Q

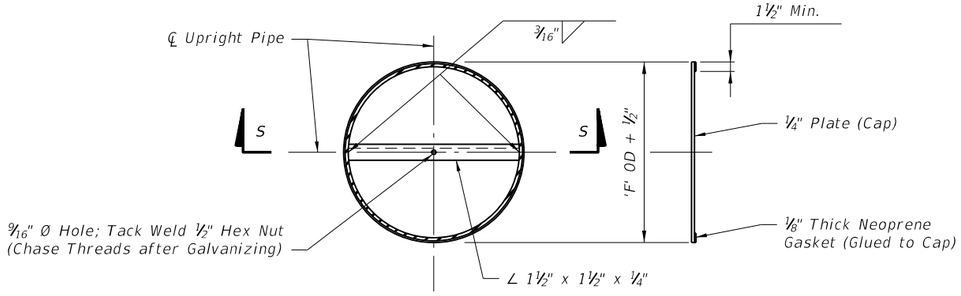

SECTION R-R SECTION S-S
(Showing Cap plate only)

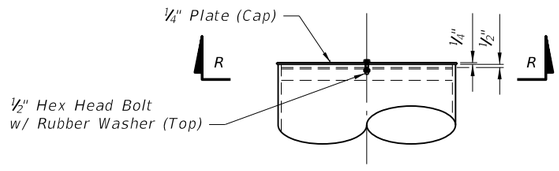

UPRIGHT CAP DETAIL

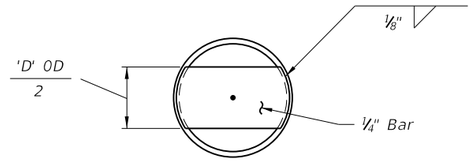

PLUG DETAIL

NOTE:
Abbreviation
OD ~ Outside Diameter

C:\d\projects\standards\roadway\11000-s\11310-05.dgn rd960rh 2:15:34 PM 6/28/2012

LAST REVISION	REVISION	DESCRIPTION:		FDOT DESIGN STANDARDS 2013	CANTILEVER SIGN STRUCTURE	INDEX NO.	SHEET NO.
01/01/09						11310	5

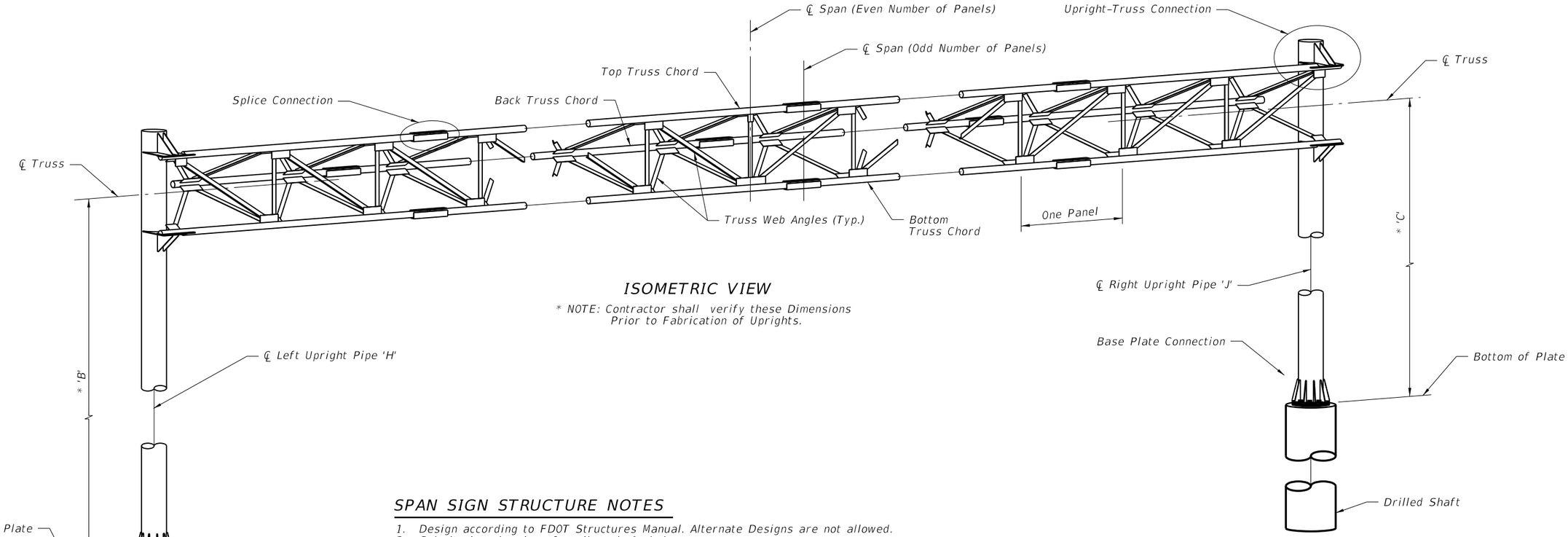

ISOMETRIC VIEW

* NOTE: Contractor shall verify these Dimensions Prior to Fabrication of Uprights.

NOTE: See Plans for Span Sign Structure Data Table.

SPAN SIGN STRUCTURE NOTES

1. Design according to FDOT Structures Manual. Alternate Designs are not allowed.
2. Submit shop drawings for all work. Include:
   a. Field verification of all upright heights.
   b. Foundation elevations necessary to insure minimum vertical clearances as per traffic plans.
   c. Anchor bolt orientation with respect to centerline of truss and the direction of traffic.
   d. The method to be used to provide the required parabolic camber. (See Camber Diagram)
3. Shop Fabrication, Assembly, Handling and Shipping:
   a. Do not begin fabrication before receiving shop drawing approval.
   b. Welding: Conform to American Welding Society Structural Welding Code (Steel) ANSI/AWS D1. 1 (current edition).
   c. Shop assemble the entire structure after galvanizing and prior to shipment.
   d. If necessary, disassemble and secure components for shipment.
4. Sign Structure Materials:
   a. Upright and Chords (Steel Pipe): API –5L–X42 (42 ksi yield) or ASTM A500, Grade B.
   b. Steel Angles: ASTM A 709, Grade 36.
   c. Steel Plates: ASTM A 709, Grade 36.
   d. Weld Metal: E70XX.
   e. Bolts: ASTM A325 Type 1, (install per Specification Section 700) with single, self–locking nuts.
   f. Anchor Bolts: ASTM F1554, Grade 55 with ASTM A563 Grade A heavy–hex double nuts.
   g. Install all nuts per manufacturer's instructions.
   h. Bolt hole diameters: equal to the bolt diameter plus 1/16".
   i. Anchor bolt hole diameters: equal to the bolt diameter plus 1/2".
   j. Use of split lock washers is not permitted.
5. Galvanization; Nuts, bolts and washers: ASTM F2329. Other steel items: ASTM A123
6. Sign Panels: Aluminum. See Elevation drawing for sizes and locations.
7. Foundation Materials:
   a. Reinforcing Steel: ASTM A615, Grade 60.
   b. Concrete: Class IV (Drilled Shaft), minimum 4.0 ksi compressive strength at 28–days for all environmental classifications.
8. Construct the Sign Structure foundation in accordance with FDOT Specification Section 455.
9. Prior to erection, record the as–built anchor locations and provide to the Engineer.
10. Provide a parabolic camber with the maximum upward deflection as shown on the Camber Diagram.
11. Locate Chord splices a minimum of 3 truss panel lengths apart. Chord splices may be either the Standard splice or the Alternate splice
    but not both on this structure. Upright splices are not allowed.
12. Install sign panels as shown on the Elevation drawing.
13. Verify CSL access tubes will not interfere with anchor bolt installation before excavating the shaft. When CSL access tube locations conflict
    with anchor bolt locations, move the CSL access tube location ± two inches along the inner circumference of the reinforcing cage. Notify the
    Engineer before excavating the shaft if the CSL access tube locations cannot be moved out of conflict with anchor bolt locations.
14. Handhole at pole base is required for DMS structures. See Index 18300 for details.

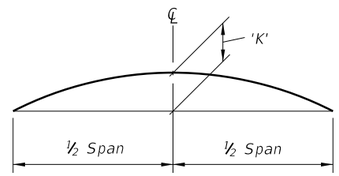

CAMBER DIAGRAM

C:\d\projects\standards\roadway\11000-s\11320-01.dgn rd960rh 2:15:36 PM 6/28/2012

LAST REVISION	REVISION	DESCRIPTION:		FDOT DESIGN STANDARDS 2013	SPAN SIGN STRUCTURE	INDEX NO.	SHEET NO.
07/01/10						11320	1

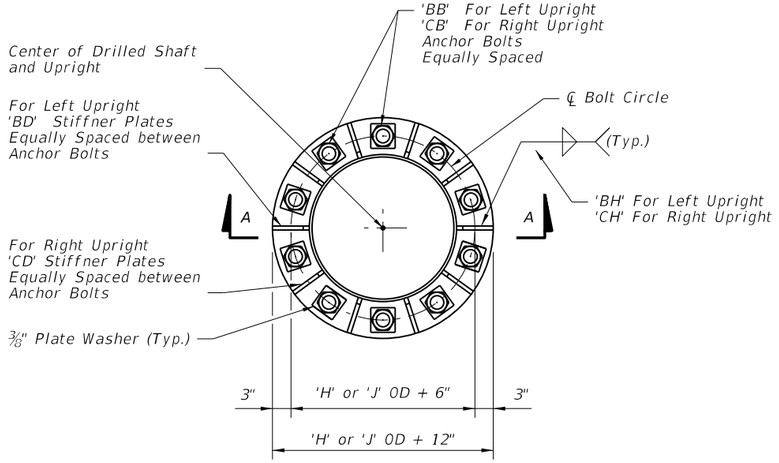

PLAN VIEW
BASE PLATE

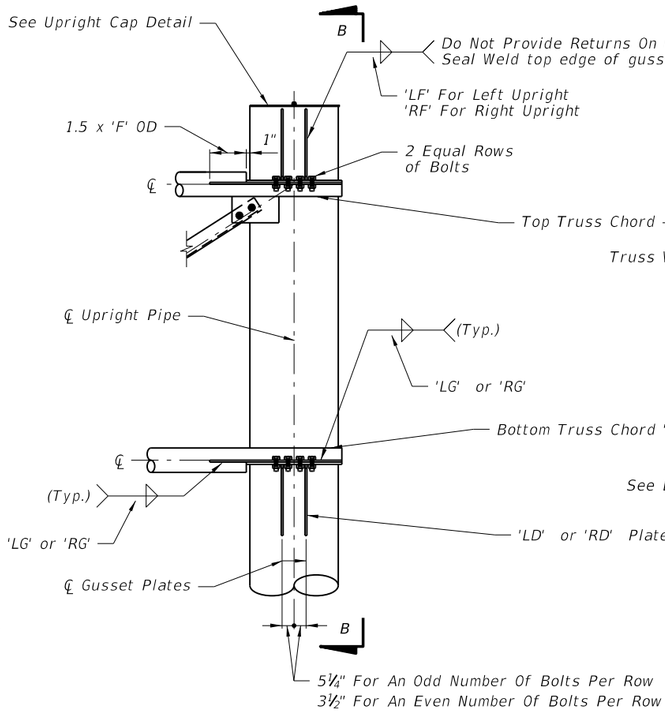

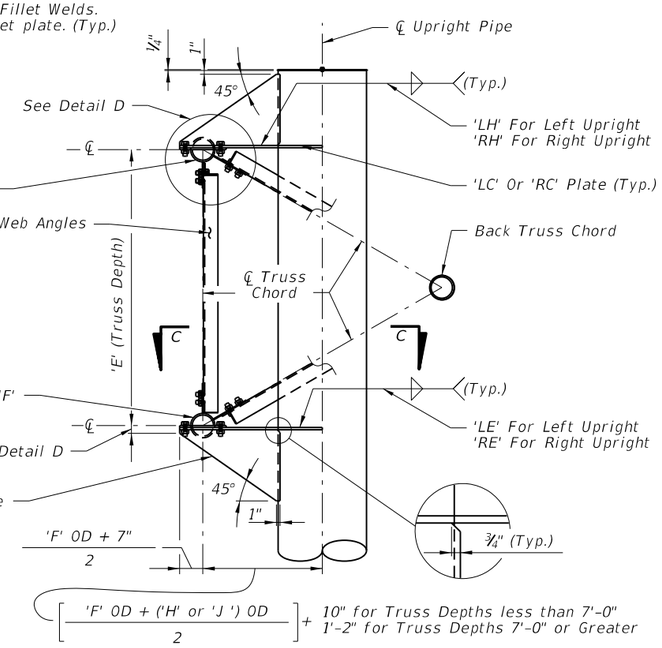

VIEW B-B

RIGHT UPRIGHT-TRUSS CONNECTION DETAIL
(LEFT UPRIGHT -TRUSS CONNECTION SIMILAR)

Web Members From Back Truss
Chord Omitted For Clarity

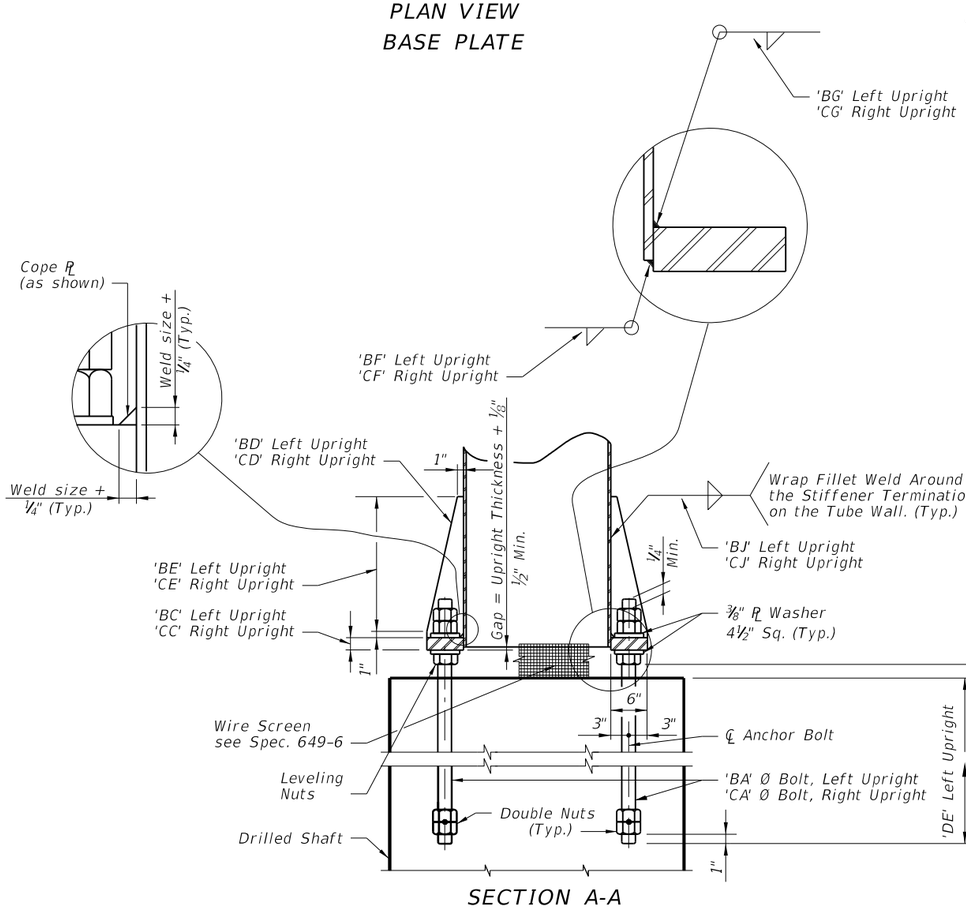

SECTION A-A

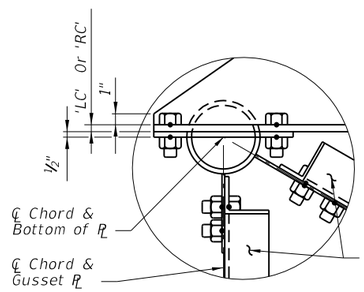

DETAIL D

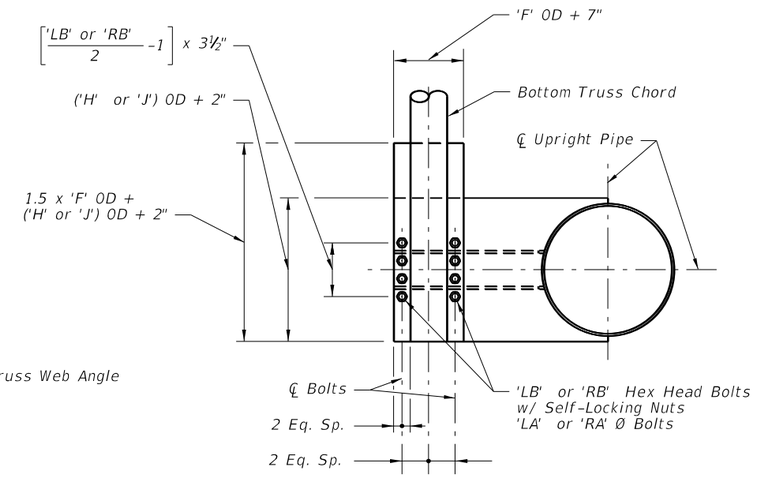

SECTION C-C

(With Gusset Plate and
Angles omitted for clarity)

NOTE:
Abbreviation
OD ~ Outside Diameter

LAST REVISION	REVISION	DESCRIPTION:		INDEX NO.	SHEET NO.
07/01/12			FDOT DESIGN STANDARDS 2013	11320	2

SPAN SIGN STRUCTURE

C:\d\projects\standards\roadway\11000-s\11320-02.dgn rd960rh 2:15:38 PM 6/28/2012

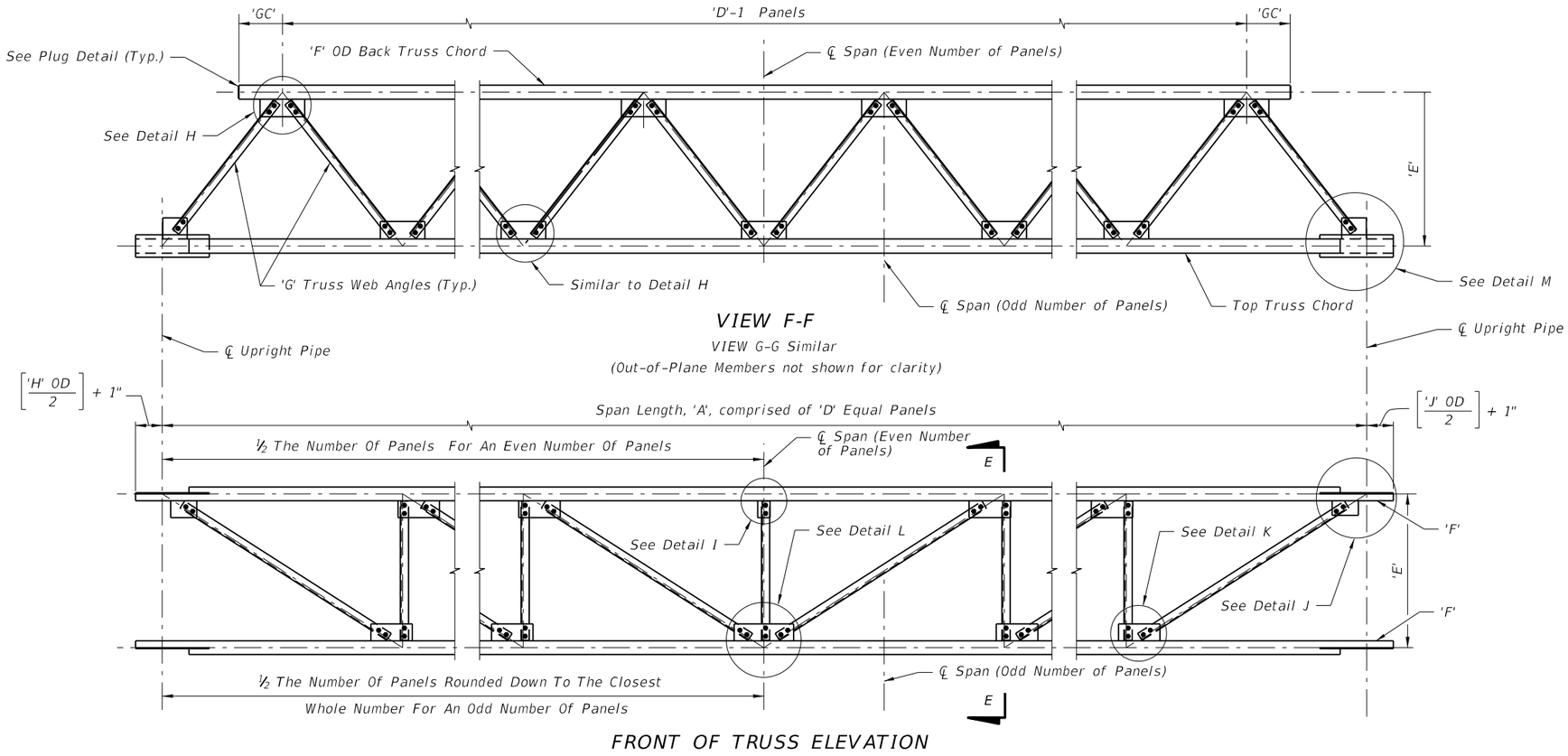

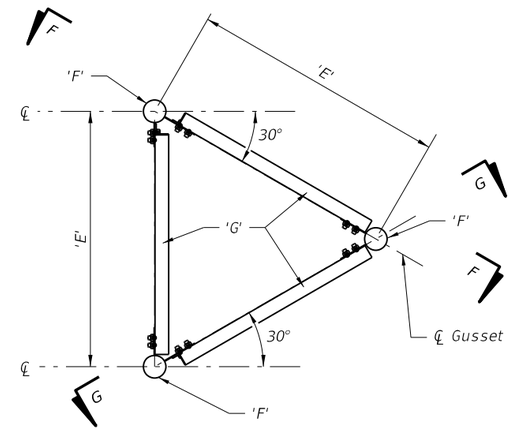

SECTION E-E

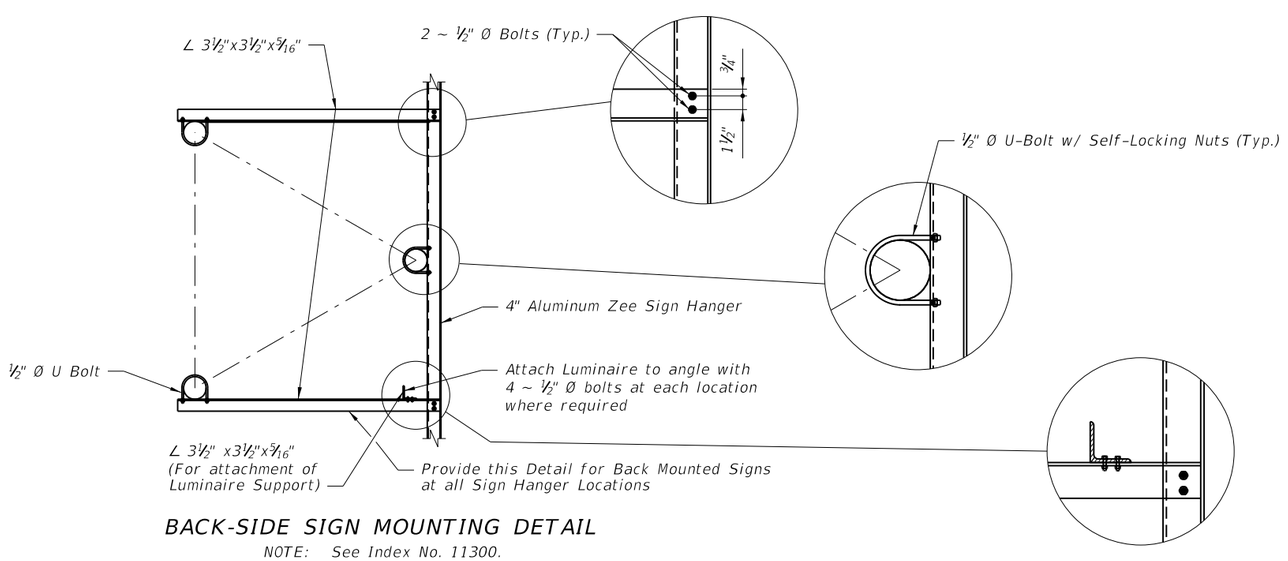

BACK-SIDE SIGN MOUNTING DETAIL

NOTE: See Index No. 11300.

NOTE:
Abbreviation
OD ~ Outside Diameter

LAST REVISION	REVISION	DESCRIPTION:			INDEX NO.	SHEET NO.
07/01/05			FDOT DESIGN STANDARDS 2013	SPAN SIGN STRUCTURE	11320	3

C:\d\projects\standards\roadway\11000-s\11320-03.dgn rd960rh 2:15:41 PM 6/28/2012

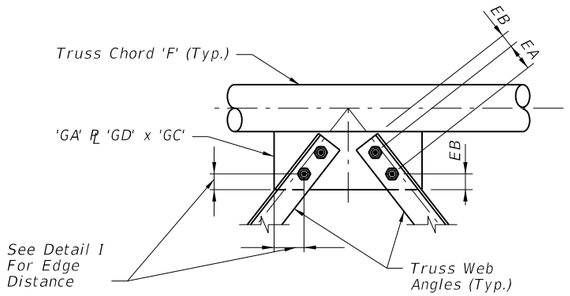

DETAIL H

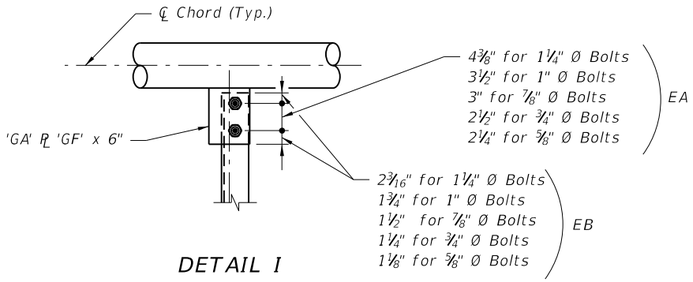

DETAIL I

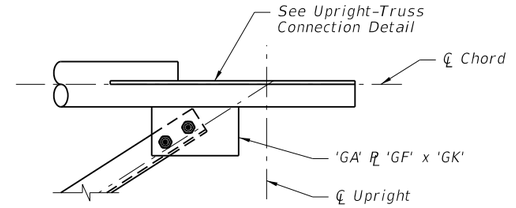

DETAIL J

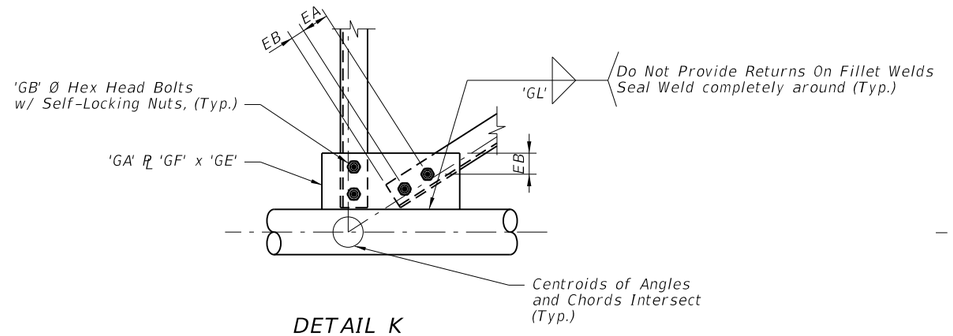

DETAIL K

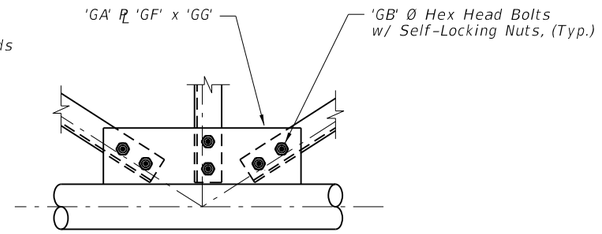

DETAIL L

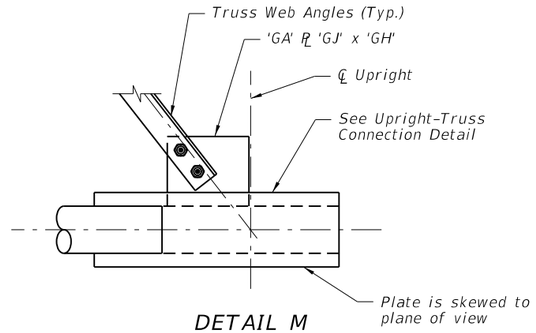

DETAIL M

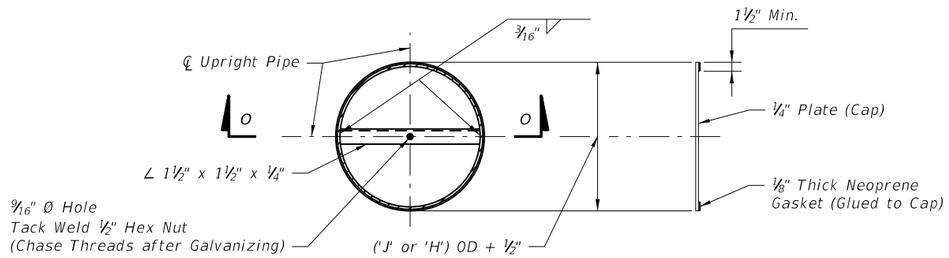

SECTION N-N

SECTION O-O
(Showing Cap plate only)

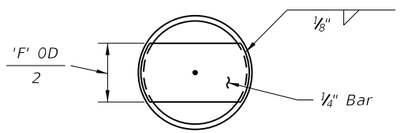

PLUG DETAIL
(Each end of Back Truss Chord)

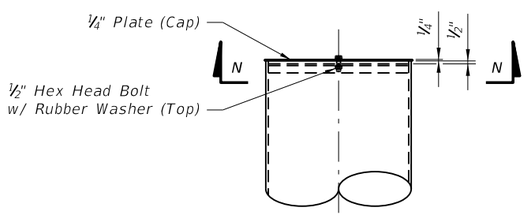

UPRIGHT CAP DETAIL

NOTE:
Abbreviation
OD ~ Outside Diameter

LAST REVISION	REVISION	DESCRIPTION:		FDOT DESIGN STANDARDS 2013	SPAN SIGN STRUCTURE	INDEX NO.	SHEET NO.
01/01/09						11320	4

C:\d\projects\standards\roadway\11000-s\11320-04.dgn
rd960rh
2:15:43 PM
6/28/2012

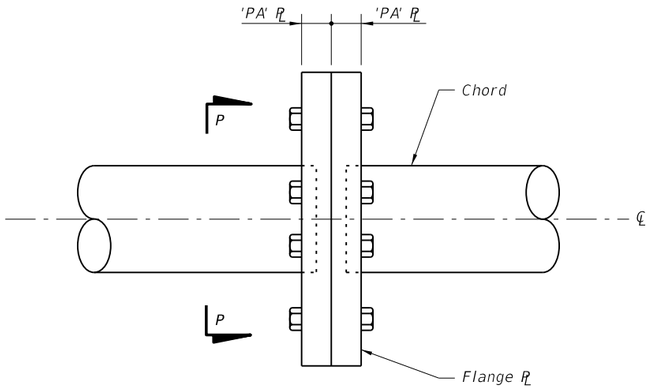

ELEVATION
ALTERNATE SPLICE CONNECTION

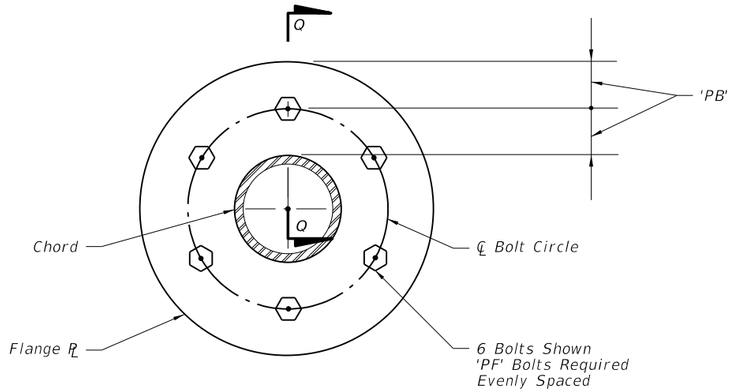

SECTION P-P

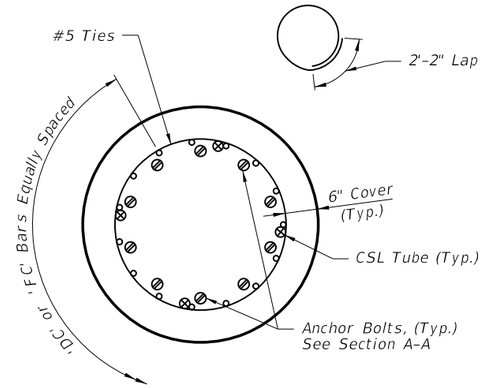

PLAN VIEW
DRILLED SHAFT

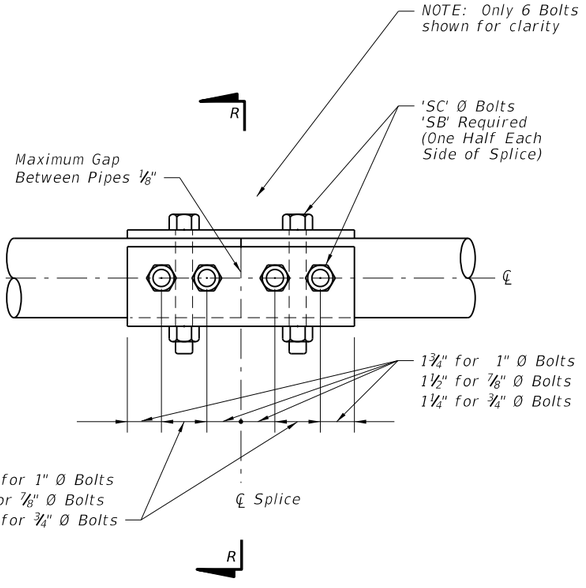

ELEVATION
SPLICE CONNECTION

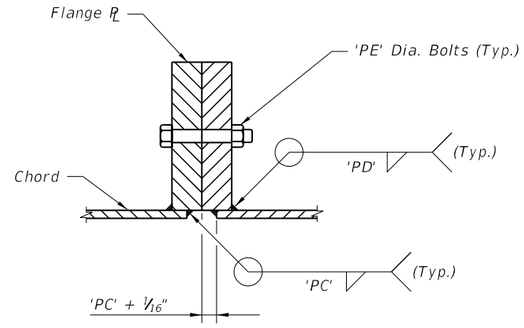

SECTION Q-Q

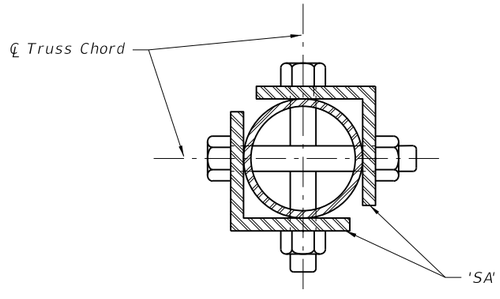

SECTION R-R

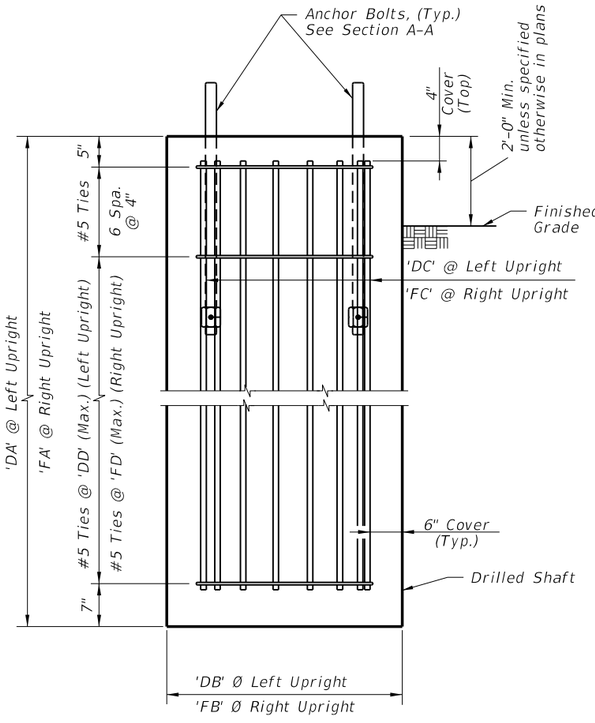

ELEVATION
DRILLED SHAFT

C:\d\projects\standards\roadway\11000-s\11320-05.dgn
rd960rh
2:15:45 PM
6/28/2012

SINGLE COLUMN GROUND SIGN NOTES:

1. DESIGN WIND SPEED: See Wind Speeds by County.
2. GENERAL SPECIFICATIONS: Current FDOT Standard Specifications for Road and Bridge Construction and supplements thereto.
3. DESIGN SPECIFICATIONS: AASHTO Standard Specifications for Structural Supports for Highway Signs, Luminaires and Traffic Signals, as modified by the FDOT Structures Manual.
4. ALUMINUM: Aluminum Materials shall meet the requirements of Aluminum Association Alloy 6061-T6 (ASTM B209, B221, or B308), except as noted below.
5. CONCRETE: Class I.
6. SIGN PANELS: 0.08 inches min. thick Aluminum Plate with all corners rounded.
7. ALUMINUM BOLTS, NUTS, AND LOCK WASHERS:
   a. Aluminum bolts: ASTM F468, Alloy 2042-T4 with at least 0.0002 inches thick anodic coating and chromate sealed.
   b. Nuts: ASTM F467, Alloy 6061-T6 or 6262-T9.
   c. Lockwashers: ASTM B221, Alloy 7075-T6.
8. STAINLESS STEEL BOLTS, NUTS, AND LOCKWASHERS: Stainless Steel Bolts, Nuts, and Lockwashers: ASTM F593 and ASTM F594, Alloy Group 2. Condition A, CW2, or SH4 may be provided in lieu of Aluminum Bolts, Nuts, and Washers.
9. U-BOLTS, NUTS, AND LOCKWASHERS: U-bolts, Nuts, and Lockwashers: ASTM A307, Grade A, galvanized in accordance with ASTM F2329.
10. BREAKAWAY SUPPORTS REQUIREMENTS: Install non-frangible aluminum column (post) (larger than 3½") with breakaway supports as shown on Sheet 5. Signs shielded by barrier wall or guardrail do not require breakaway support.

WIND SPEEDS BY COUNTY:

110 MPH
Alachua, Baker, Bradford, Clay, Columbia, Gadsden, Gilchrist, Hamilton, Hardee, Jackson, Jefferson, Lafayette, Lake, Leon, Madison, Marion, Polk, Putnam, Sumter, Suwannee and Union counties.

130 MPH
Bay, Brevard, Calhoun, Charlotte, Citrus, De Soto, Dixie, Duval, Flagler, Franklin, Glades, Gulf, Hendry, Hernando, Highlands, Hillsborough, Holmes, Lee, Levy, Liberty, Manatee, Nassau, Okaloosa, Okeechobee, Orange, Osceola, Pasco, Pinellas, Sarasota, Seminole, St Johns, Taylor, Volusia, Wakulla, Walton and Washington counties.

150 MPH
Broward, Collier, Dade, Escambia, Indian River, Martin, Monroe, Palm Beach, Santa Rosa and St. Lucie counties.

GUIDE TO USE THIS STANDARD:

1. Calculate the area and the centroid for an individual sign or a sign cluster. Note that the centroid and areas have been calculated for frequently used sign clusters. These are shown on Sheet No. 6, 7 & 8 of 8.
2. Determine the height 'H' from groundline for the individual sign or the cluster.
3. Select the appropriate Column (Post) Selection Tables by Wind Speed and find the intersection point.
4. Design the post and the foundation according to the dark-bold lines or shaded area (if cantilever sign) in the Column (Post) Selection Tables and Post and Foundation Table. For sign posts with signs oriented in two directions, only the sign with the largest area should be analyzed to determine the post requirements.

EXAMPLE:

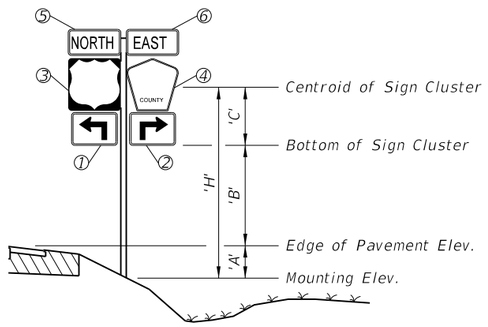

	Size H x V	Centroid: local $'Y_n'$	Centroid: global $'X_n'$	Centroid: global $'Y_n'$	$'A_n'$	$'X_n'$ x $'A_n'$	$'Y_n'$ x $'A_n'$	
	(in. x in.)	(in.)	(in.)	(in.)	($in.^2$)	($in.^3$)	($in.^3$)	
①	21 x 15	7.5	-10.5-1.5-1.5 = -13.5	7.5	315	-4,252.5	2,362.5	
②	21 x 15	7.5	10.5+1.5+1.5 = 13.5	7.5	315	+4,252.5	2,362.5	
③	24 x 24	12	-12-1.5 = -13.5	15+1+12= 28	576	-7,776	16,128	
④	24 x 24	12	12+1.5 = 13.5	15+1+12= 28	436	5,886	12,208	
⑤	24 x 12	6	-12-1.5 = -13.5	15+1+24+ 1+6=47	288	-3,888	13,536	
⑥	24 x 12	6	12+1.5 = 13.5	15+1+24+ 1+6=47	288	3,888	13,536	
					2,218	-1,890	60,133	TOTALS

$\Sigma('A_n') = 2{,}218\ in.^2 = 15.4\ ft.^2$ $\quad \Sigma('X_n' \times 'A_n') = -1{,}890\ in.^3 = -1.09\ ft.^3$ $\quad \Sigma('Y_n' \times 'A_n') = 60{,}133\ in.^3 = 34.8\ ft.^3$

$'X'_c = \dfrac{\Sigma('X'_n \times 'A'_n)}{\Sigma 'A'_n} = -0.1\ ft.$ $\quad 'Y'_c = \dfrac{\Sigma('Y'_n \times 'A'_n)}{\Sigma 'A'_n} = 2.26\ ft.$

Assume: Bay County, 'A' = 1 ft., 'B' = 7 ft.

Calculated: $'X'_c = -0.1$ ft. 'C' = $'Y'_c = 2.26$ ft.

Since $'X'_c < 6"$, it is not a cantilever sign, only dark-bold lines in the table will be referenced to.

'H' = 'A' +'B' +'C' = 10.26 ft. ==> USE 11 ft. $\Sigma('A_n') = 15.4\ ft.^2$ ==> USE 16 $ft.^2$

ALUMINUM COLUMN (POST) SELECTION TABLE (WIND SPEED = 130 MPH)

TOTAL PANEL AREA (SF)	'H' (ft.) 8 [0]	9	10	11 [1]	12	13	14 [2]	15	16	17	18	19	20	
3	▨													3
4						▨								
5														
6			▨											
7		▨												
8	▨													4
9						▨						▨		
10					▨						▨			
11														5
12														
13														
14														6
15							▨			▨				
16	▨	–	–	–	–	–	X							
17														
18					▨			▨						
19														
20				▨										
21														
22			▨											
23								▨						
24					▨								▨	7
25		▨					▨							
26				▨								▨		
27														
28	▨										▨			
29	▨		▨											
30					▨									8

▨ = If CANTILEVER SIGN configuration (see Cantilever Sign Details) falls in this region, use next larger post size than that indicated.

For WIND SPEED = 130 MPH,
'H' = 11 ft., Area = 16 $ft.^2$

- Refer to the 130 mph Column (Post) Selection Table, as copied from Sheet 3 and shown here.
- Using the 16 $ft.^2$ area on the left hand side of the table, go across to the 11 ft. height and find the cell marked with X.
- find the symbol [4] which the dark-bold line under the X cell leads to.
- In the Post and Foundation Table, the symbol [4] concludes that the design requires a 4.0" diameter and 0.25" thick Aluminum Column (Post) and a 2.0' diameter and 4.0' deep Concrete Foundation.

NOTES AND EXAMPLE

C:\d\projects\standards\roadway\11000-s\11860-01.dgn rd960rh 2:15:47 PM 6/28/2012

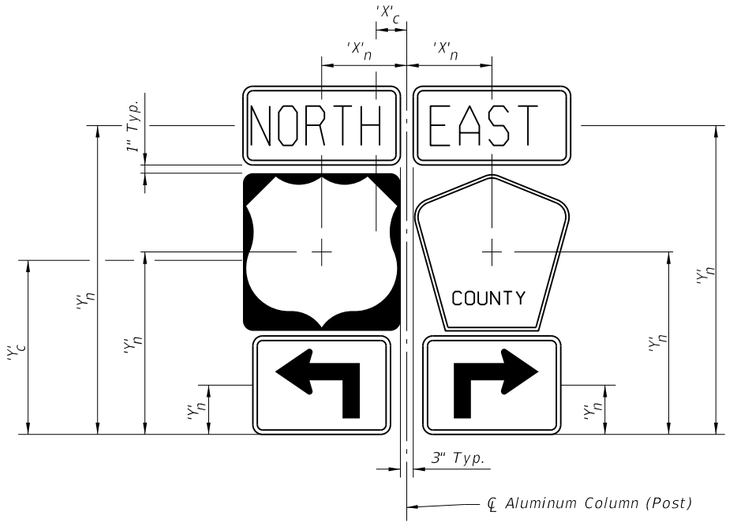

SIGN CLUSTER

CALCULATION OF SIGN CLUSTER CENTROID:

$$'X'_c = \frac{\Sigma\,('X'_n \times 'A'_n)}{\Sigma\,'A'_n}$$

$$'C' = 'Y'_c = \frac{\Sigma\,('Y'_n \times 'A'_n)}{\Sigma\,'A'_n}$$

$'X'_c$ = Centroid horizontal location of sign or cluster from ℄ Column (post)

$'Y'_c$ = Centroid height of sign or cluster from bottommost edge

'H' = Height of sign or cluster centroid from groundline

$'X'_n$ = Individual sign centroid horizontal location from ℄ Column (post)

$'Y'_n$ = Individual sign centroid height from bottommost edge

$'A'_n$ = Area of individual sign

For 'A' & 'B' see Index No. 17302 and Roadway Plans.

NOTE:
No sign or sign cluster area shall exceed 30 SF nor shall any sign or sign cluster have a total width exceeding 60 inches.

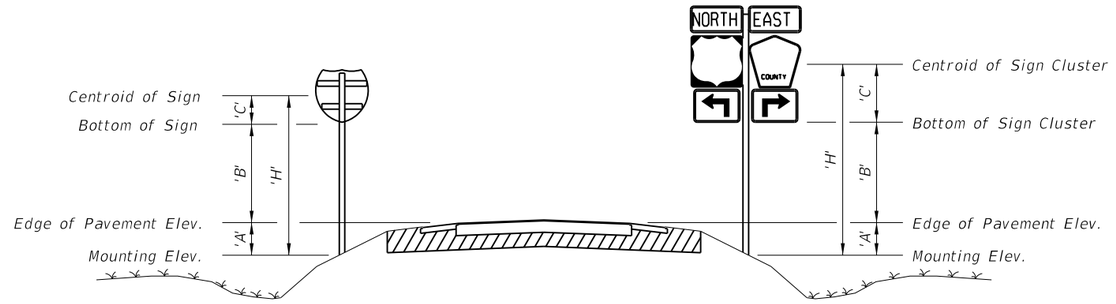

TYPICAL SECTION

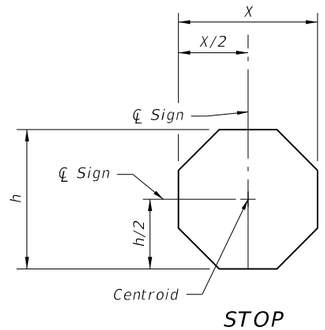

STOP

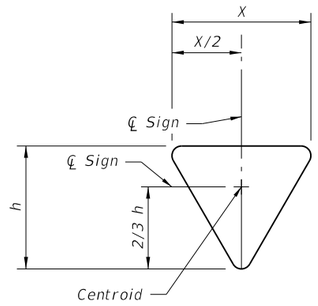

YIELD

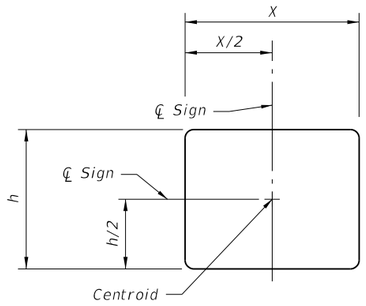

RECTANGLE

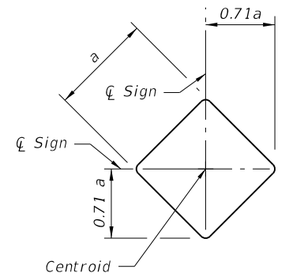

DIAMOND

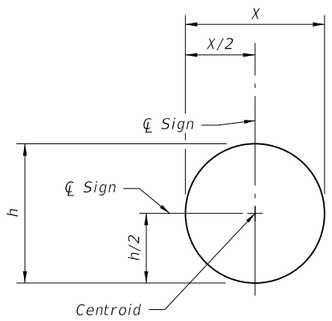

RAILROAD

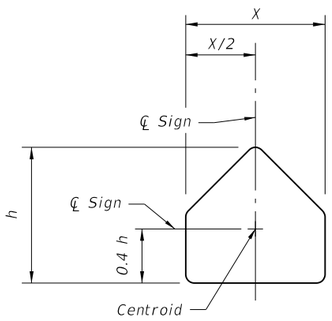

SCHOOL

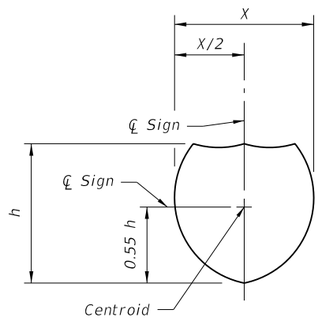

SHIELD

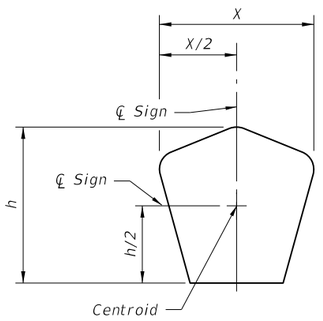

COUNTY

CENTROID AND HEIGHT

C:\d\projects\standards\roadway\11000-s\11860-02.dgn
rd960rh
2:15:50 PM
6/28/2012

LAST REVISION	REVISION	DESCRIPTION:		FDOT DESIGN STANDARDS 2013	SINGLE COLUMN GROUND SIGNS	INDEX NO.	SHEET NO.
07/01/09						11860	2

ALUMINUM COLUMN (POST) SELECTION TABLE (WIND SPEED = 110 MPH)

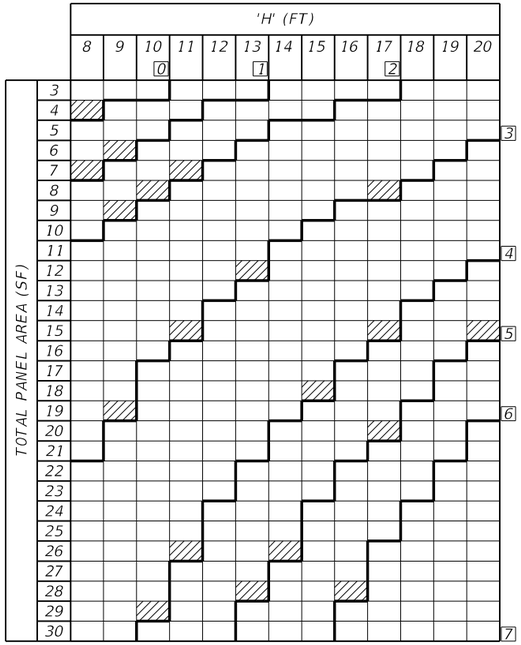

ALUMINUM COLUMN (POST) SELECTION TABLE (WIND SPEED = 130 MPH)

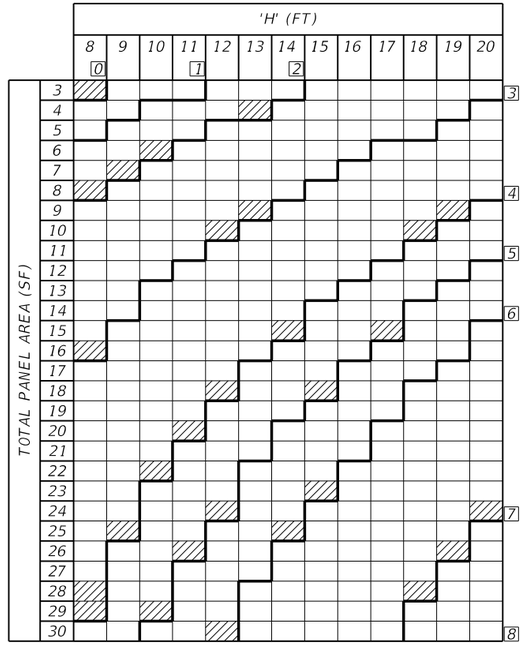

ALUMINUM COLUMN (POST) SELECTION TABLE (WIND SPEED = 150 MPH)

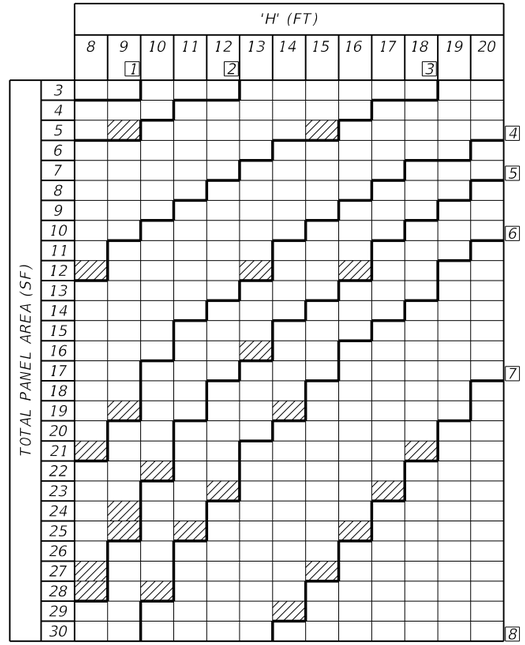

▨ = If CANTILEVER SIGN configuration (see Cantilever Sign Details) falls in this region, use next larger post size than that indicated.

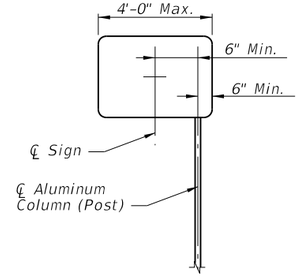

CANTILEVER SIGN

NOTE:
All cantilever sign installations shall comply with Standard Index 17302.

POST AND FOUNDATION TABLE

	Foundation Alternatives						
	Post Size		Driven Post *		Concrete (Class I)		
	Diameter (IN)	Wall (IN)	Depth (FT) without Soil Plate	Depth (FT) with Soil Plate	Diameter (FT)	Depth (FT)	Stub Length (FT)
0	2.0	1/8	4.5	2.5	2.0	2.0	2.0
1	2.5	1/8	5.0	3.0	2.0	2.0	2.0
2	3.0	1/8	5.0	3.5	2.0	2.5	2.5
3	3.5	3/16	6.0	4.5	2.0	3.0	3.0
4	4.0	1/4	---	---	2.0	4.0	3.0
5	4.5	1/4	---	---	2.0	4.0	3.0
6	5.0	1/4	---	---	2.0	4.5	3.0
7	6.0	1/4	---	---	2.0	5.0	3.0
8	8.0	5/16	---	---	2.0	5.5	3.0

* INSTALLING FRANGIBLE COLUMN SUPPORTS:
Columns (posts) may be installed by driving the columns in accordance with this Index, or as an alternate method, the columns (posts) may be set to the depth indicated in preformed holes backfilled with suitable material tamped in layers not thicker than 6" to provide adequate compaction or filled with flowable fill or bagged concrete.

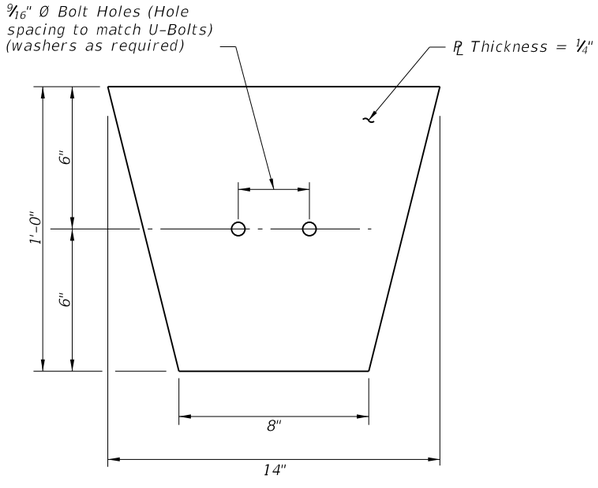

ALUMINUM SOIL PLATE DETAILS

NOTES:
1. Align Soil Plate bottom at 2/3 of foundation depth.
2. Slot up to 1" long is allowed to accommodate various post sizes.
3. Rectangular soil plate of size 1'-2" x 1'-0" may be used as an alternative.

POST AND FOUNDATION TABLES

6/28/2012 2:15:52 PM rd960rh C:\d\projects\standards\roadway\11000-s\11860-03.dgn

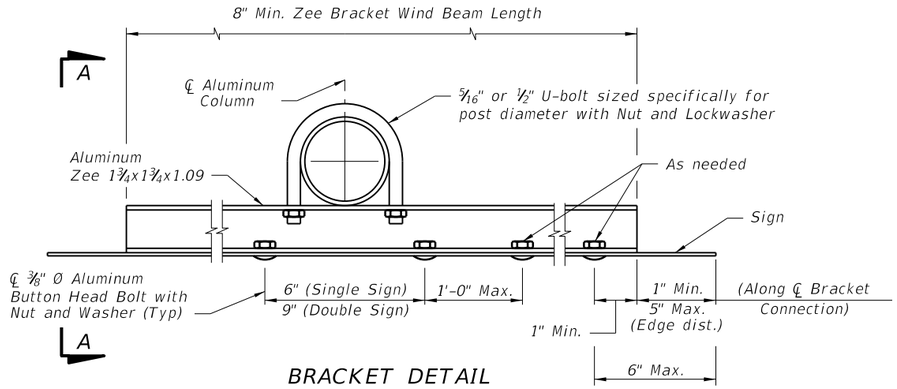

BRACKET DETAIL

NOTES:
1. 5/16" Ø Stainless Steel Hex Head Bolts with Flat Washer under Head and Lockwasher under Nut may be used in lieu of 3/8" Ø Aluminum Button Head Bolts.
2. Nylon washers provided by the sheeting supplier shall be used on all ground mounted signs. The washers shall be installed under the sign bolt head to protect the sheeting.
3. Vertical spacing of brackets shall not exceed 2'-6". Use additional brackets, spaced evenly, to maintain maximum spacing.

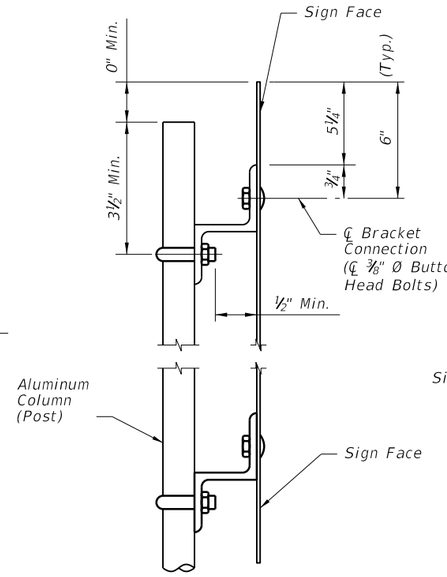

VIEW A-A

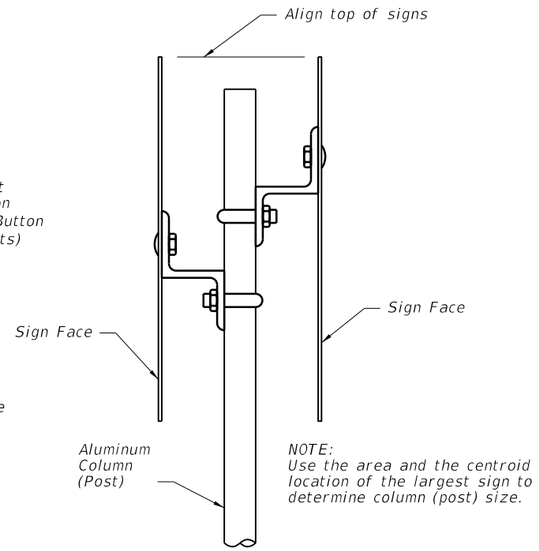

SIGNS BACK-TO-BACK

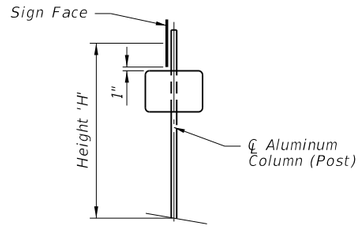

SIGNS AT 90°

* For signs with either dimension of sign size greater than 30" a third zee bracket wind beam shall be installed along the ℄.

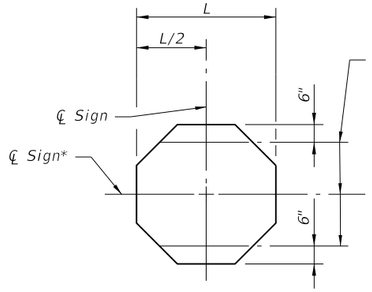

STOP

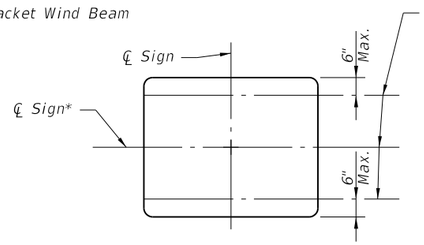

RECTANGLE
(Use only one Wind Beam at ℄ Sign for sign height up to 12")

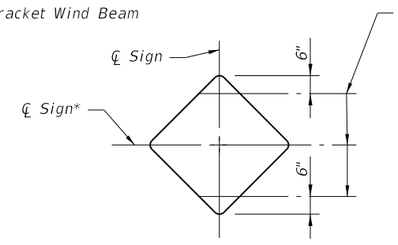

DIAMOND

** For Yield signs greater than 36" a third zee bracket wind beam shall be installed along the ℄.

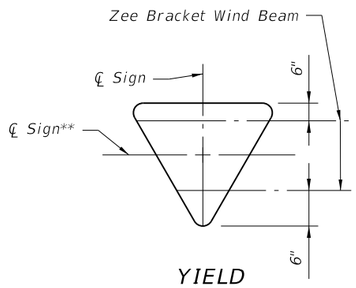

YIELD

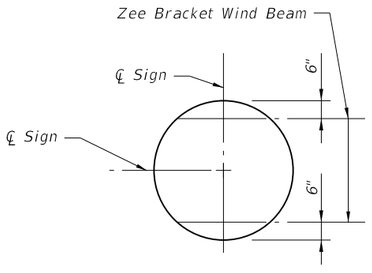

RAILROAD

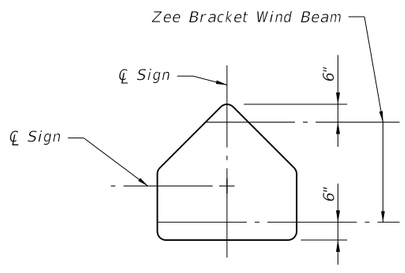

SCHOOL

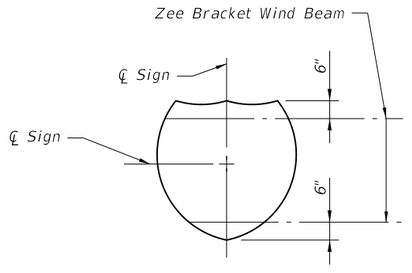

SHIELD

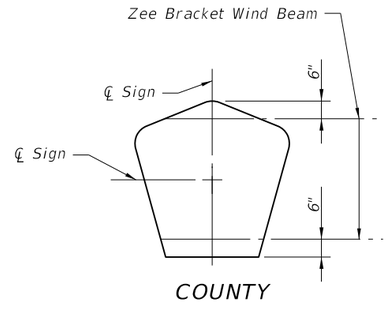

COUNTY

CONNECTION AND WIND BEAM

LAST REVISION	REVISION	DESCRIPTION:			INDEX NO.	SHEET NO.
07/01/12			FDOT DESIGN STANDARDS 2013	SINGLE COLUMN GROUND SIGNS	11860	4

C:\d\projects\standards\roadway\11000-s\11860-04.dgn rd960rh 2:15:54 PM 6/28/2012

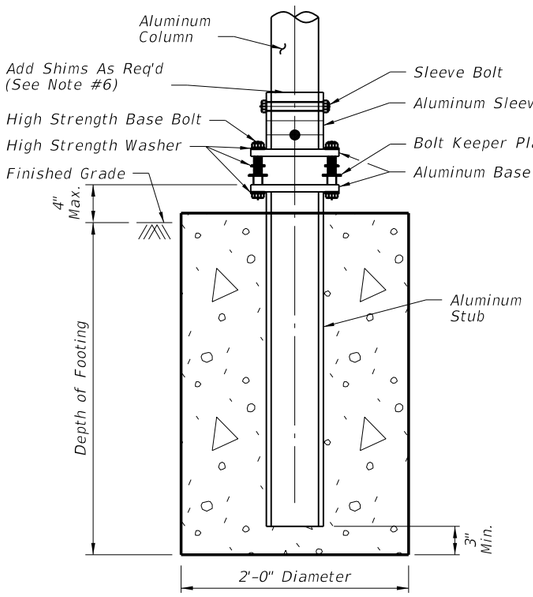

SLIP BASE AND FOOTING DETAIL
(non-frangible post)

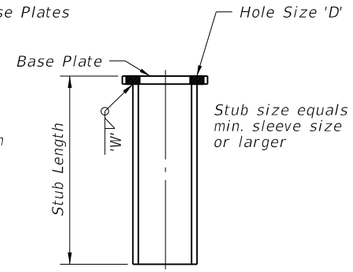

STUB DETAIL

SLIP BASE NOTES:

1. Use sleeves with an inside diameter (I.D.) no more than 1/16" larger than the outside diameter (O.D.) of the column.
2. Sleeve Bolts: ASTM A-307, 1/2" Ø galvanized steel bolt (with lock nuts) or Alloy 2024-T4 or 6061-T6 (ASTM B-211).
3. Base bolts, Nuts, and Washers: high strength ASTM A-325 galvanized per ASTM F2329.
4. Base plates may have either single or double beveled slots.
5. An alternate cast base plate of aluminum alloy 356 and T6 temper in lieu of the fabricated base plate may be submitted for approval. If a cast base plate is used, the stub will be the same size as the column and will be bolted to the casting.
6. Assemble the slip base connection in the following manner:
   a. Connect column to sleeve using two 1/2" Ø machine bolts.
   b. Assemble top base plate to stub base plate using high strength bolts with three hardened washers per bolt. One of the three washers per bolt and two bolt keeper plates go between the base plates. Orient the bolt keeper plates in the Directions of Traffic.
   c. Use shim stock as required to plumb the column.
   d. Tighten all bolts to the maximum possible with a 12" to 15" wrench. (This will bed the washers and shims and clear the bolt threads.)
   e. Loosen each bolt one turn and using a calibrated wrench retighten to the prescribed torque (see table) under the supervision of the Project Engineer.
   f. Burr threads at junction with nut using a center punch to prevent nut loosening.
7. Use galvanized steel shims to obtain a tight fit between the column face and the sleeve. Place shims in all quadrants between the 1/2" Ø sleeve bolts. Use shims that are 1" shorter than the height of the sleeve.
8. Both fabricated and cast base assemblies were impact tested by the Texas Transportation Institute, College Station, TX on February 10, 2003, and both alternate assemblies were determined to be compliant with the performance recommendations of the National Cooperative Highway Research Program (NCHRP) report 350.

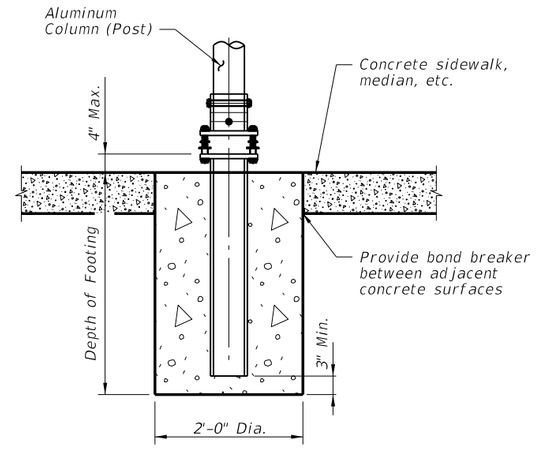

SLIP BASE AND FOOTING DETAIL IN CONCRETE
(non-frangible post in crossovers, medians, & sidewalks)

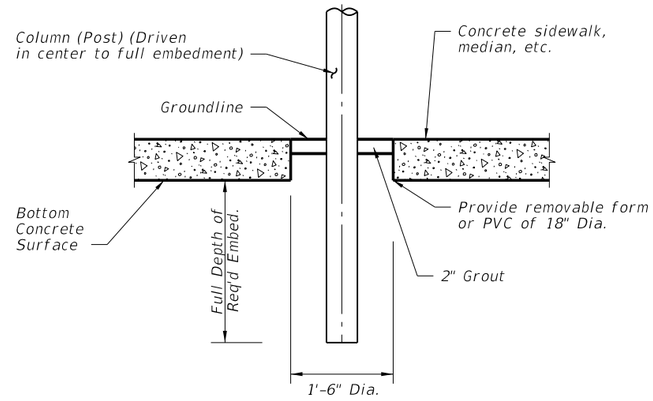

DRIVEN POST DETAIL IN CONCRETE
(frangible post in crossovers, medians, & sidewalks)

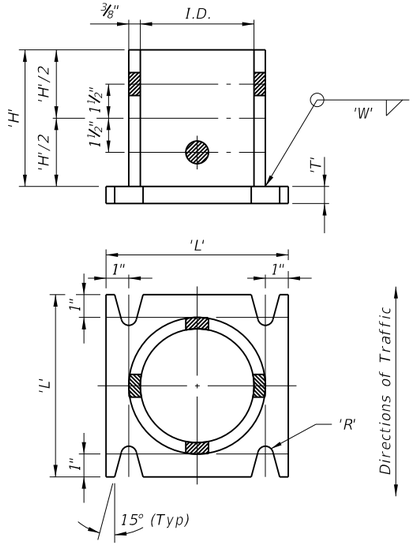

ALUMINUM SLEEVE & BASE PLATE DETAILS
(DOUBLE BEVELED SLOTS)

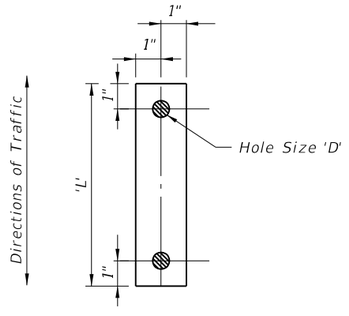

0.0149" Thick Alum. Strip - 2 Req'd Per Base
BOLT KEEPER PLATE DETAIL

SLIP BASE DETAILS

Column Size	Sleeve I.D. (Max)	Sleeve Height 'H'	Weld 'W'	Base Plate		Radius 'R'	Base Bolt		Base Plate Torque		Hole Size 'D'
				'L'	'T'		Size	Length	ft-lbs	in.-lbs	
4 x 1/4	4 1/16	6	5/8	8	3/4	11/32	5/8	3	29	345	11/16
4 1/2 x 1/4	4 9/16	6	5/8	8	7/8	11/32	5/8	3 1/4	29	345	11/16
5 x 1/4	5 1/16	7	5/8	8	7/8	11/32	5/8	3 1/4	29	345	11/16
6 x 1/4	6 1/16	8	11/16	9	1	13/32	3/4	3 1/2	46	554	13/16
8 x 5/16	8 1/16	10	3/4	11	1	15/32	7/8	3 3/4	53	640	15/16

Note: Unless noted otherwise, all dimensions are in inches.

BASE AND FOUNDATION DETAILS

6/28/2012 2:15:56 PM rd960rh C:\d\projects\standards\roadway\11000-s\11860-05.dgn

Size	Area	Total Area	Centroid
36x12	3.00 SF	6.31 SF	1.75 Ft.
24x24	3.31 SF		

Size	Area	Total Area	Centroid
36x12	3.00 SF	8.18 SF	1.92 Ft.
30x30	5.18 SF		

Size	Area	Total Area	Centroid
36x12	3.00 SF	10.46 SF	2.10 Ft.
36x36	7.46 SF		

Size	Area	Total Area	Centroid
36x12	3.00 SF	16.25 SF	2.48 Ft.
48x48	13.25 SF		

Size	Area	Total Area	Centroid
24x24	3.31 SF	6.31 SF	1.71 Ft.
24x18	3.00 SF		

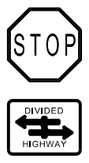

Size	Area	Total Area	Centroid
30x30	5.18 SF	10.18 SF	2.19 Ft.
30x24	5.00 SF		

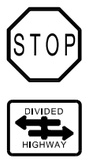

Size	Area	Total Area	Centroid
36x36	7.46 SF	12.46 SF	2.55 Ft.
30x24	5.00 SF		

Size	Area	Total Area	Centroid
36x12	3.00 SF	13.18 SF	2.87 Ft.
30x30	5.18 SF		
30x24	5.00 SF		

Size	Area	Total Area	Centroid
36x12	3.00 SF	15.46 SF	3.15 Ft.
36x36	7.46 SF		
30x24	5.00 SF		

Size	Area	Total Area	Centroid
21x15	2.19 SF	6.19 SF	1.60 Ft.
24x24	4.00 SF		

Size	Area	Total Area	Centroid
21x15	2.19 SF	7.19 SF	1.52 Ft.
30x24	5.00 SF		

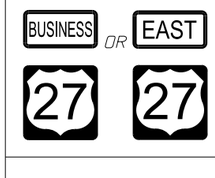

Size	Area	Total Area	Centroid
24x12	2.00 SF	6.00 SF	1.53 Ft.
24x24	4.00 SF		

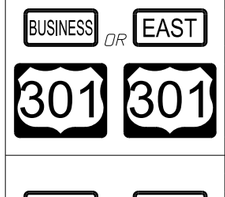

Size	Area	Total Area	Centroid
24x12	2.00 SF	7.00 SF	1.45 Ft.
30x24	5.00 SF		

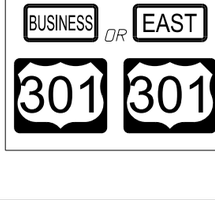

Size	Area	Total Area	Centroid
30x15	3.13 SF	8.13 SF	1.66 Ft.
30x24	5.00 SF		

Size	Area	Total Area	Centroid
24x24	4.00 SF	6.19 SF	1.73 Ft.
21x15	2.19 SF		

Size	Area	Total Area	Centroid
30x24	5.00 SF	7.19 SF	1.81 Ft.
21x15	2.19 SF		

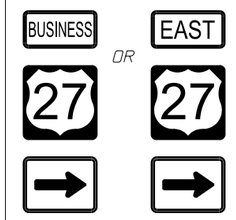

Size	Area	Total Area	Centroid
24x12	2.00 SF	8.19 SF	2.26 Ft.
24x24	4.00 SF		
21x15	2.19 SF		

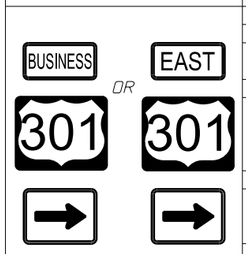

Size	Area	Total Area	Centroid
24x12	2.00 SF	9.19 SF	2.27 Ft.
30x24	5.00 SF		
21x15	2.19 SF		

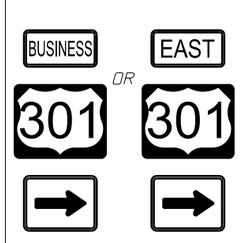

Size	Area	Total Area	Centroid
30x15	3.13 SF	10.32 SF	2.49 Ft.
30x24	5.00 SF		
21x15	2.19 SF		

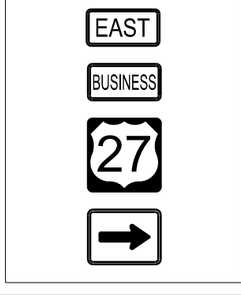

Size	Area	Total Area	Centroid
24x12	2.00 SF	10.19 SF	2.80 Ft.
24x12	2.00 SF		
24x24	4.00 SF		
21x15	2.19 SF		

C:\d*projects\standards\roadway\11000-s\11860-06.dgn
rd960rh
2:15:58 PM
6/28/2012

LAST REVISION	REVISION	DESCRIPTION:		FDOT DESIGN STANDARDS 2013	SINGLE COLUMN GROUND SIGNS	INDEX NO.	SHEET NO.
07/01/07						11860	6

	Size	Area	Total Area	Centroid
EAST	24x12	2.00 SF	11.19 SF	2.76 Ft.
BUSINESS	24x12	2.00 SF		
301	30x24	5.00 SF		
→	21x15	2.19 SF		

	Size	Area	Total Area	Centroid
EAST	30x15	3.13 SF	13.45 SF	3.16 Ft.
BUSINESS	30x15	3.13 SF		
301	30x24	5.00 SF		
→	21x15	2.19 SF		

	Size	Area	Total Area	Centroid
JCT	21x15	2.19 SF	3.90 SF	1.57 Ft.
LEON 56 COUNTY	18x18	1.71 SF		
→	21x15	2.19 SF		

	Size	Area	Total Area	Centroid
JCT	21x15	2.19 SF	5.22 SF	1.72 Ft.
LEON 56 COUNTY	24x24	3.03 SF		
→	21x15	2.19 SF		

	Size	Area	Total Area	Centroid
JCT	21x15	2.19 SF	6.95 SF	1.87 Ft.
LEON 56 COUNTY	30x30	4.76 SF		
→	21x15	2.19 SF		

	Size	Area	Total Area	Centroid
LEON 56 COUNTY	18x18	1.71 SF	3.90 SF	1.26 Ft.
→	21x15	2.19 SF		

	Size	Area	Total Area	Centroid
LEON 56 COUNTY	24x24	3.03 SF	5.22 SF	1.62 Ft.
→	21x15	2.19 SF		

	Size	Area	Total Area	Centroid
LEON 56 COUNTY	30x30	4.76 SF	6.95 SF	1.97 Ft.
→	21x15	2.19 SF		

	Size	Area	Total Area	Centroid
TO	24x12	2.00 SF	9.39 SF	2.87 Ft.
EAST	24x12	2.00 SF		
INTERSTATE 75	24x24	3.20 SF		
→	21x15	2.19 SF		

	Size	Area	Total Area	Centroid
TO	24x12	2.00 SF	10.18 SF	2.84 Ft.
EAST	24x12	2.00 SF		
INTERSTATE 295	30x24	3.99 SF		
→	21x15	2.19 SF		

	Size	Area	Total Area	Centroid
TO	30x15	3.13 SF	12.44 SF	3.26 Ft.
EAST	30x15	3.13 SF		
INTERSTATE 295	30x24	3.99 SF		
→	21x15	2.19 SF		

	Size	Area	Total Area	Centroid
JCT	21x15	2.19 SF	5.39 SF	1.75 Ft.
INTERSTATE 75	24x24	3.20 SF		

	Size	Area	Total Area	Centroid
JCT	21x15	2.19 SF	6.18 SF	1.67 Ft.
INTERSTATE 295	30x24	3.99 SF		

	Size	Area	Total Area	Centroid
EAST INTERSTATE 75 OR TO INTERSTATE 75	24x12	2.00 SF	5.20 SF	1.67 Ft.
	24x24	3.20 SF		

	Size	Area	Total Area	Centroid
EAST INTERSTATE 295 OR TO INTERSTATE 295	24x12	2.00 SF	5.99 SF	1.60 Ft.
	30x24	3.99 SF		

	Size	Area	Total Area	Centroid
EAST INTERSTATE 295 OR TO INTERSTATE 295	30x15	3.13 SF	7.12 SF	1.81 Ft.
	30x24	3.99 SF		

	Size	Area	Total Area	Centroid
EAST INTERSTATE 75 OR TO INTERSTATE 75	30x15	3.13 SF	10.33 SF	2.27 Ft.
	36x36	7.20 SF		

C:\d\projects\standards\roadway\11000-s\11860-07.dgn
rd960rh
2:16:00 PM
6/28/2012

LAST REVISION	REVISION	DESCRIPTION:		FDOT DESIGN STANDARDS 2013	SINGLE COLUMN GROUND SIGNS	INDEX NO.	SHEET NO.
07/01/07						11860	7

Size	Area	Total Area	Centroid
30x15	3.13 SF	12.12 SF	2.18 Ft.
45x36	8.99 SF		

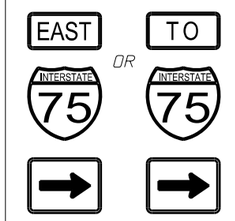

Size	Area	Total Area	Centroid
24x12	2.00 SF	7.39 SF	2.30 Ft.
24x24	3.20 SF		
21x15	2.19 SF		

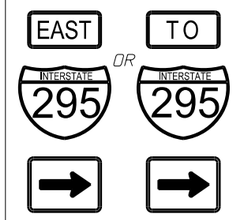

Size	Area	Total Area	Centroid
24x12	2.00 SF	8.18 SF	2.31 Ft.
30x24	3.99 SF		
21x15	2.19 SF		

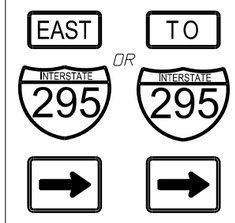

Size	Area	Total Area	Centroid
30x15	3.13 SF	9.31 SF	2.55 Ft.
30x24	3.99 SF		
21x15	2.19 SF		

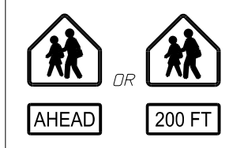

Size	Area	Total Area	Centroid
30x30	4.69 SF	6.69 SF	1.61 Ft.
24x12	2.00 SF		

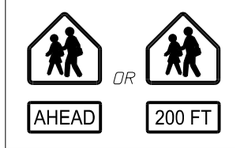

Size	Area	Total Area	Centroid
30x30	4.69 SF	8.44 SF	1.77 Ft.
30x18	3.75 SF		

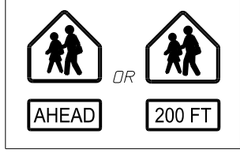

Size	Area	Total Area	Centroid
36x36	6.75 SF	10.50 SF	2.06 Ft.
30x18	3.75 SF		

Size	Area	Total Area	Centroid
30X30	4.69 SF	6.69 SF	1.61 Ft.
24X12	2.00 SF		

Size	Area	Total Area	Centroid
30X30	4.69 SF	8.44 SF	1.77 Ft.
30X18	3.75 SF		

Size	Area	Total Area	Centroid
36X36	6.75 SF	10.50 SF	2.06 Ft.
30X18	3.75 SF		

Size	Area	Total Area	Centroid
30X30	6.25 SF	8.25 SF	2.28 Ft.
24X12	2.00 SF		

Size	Area	Total Area	Centroid
36X36	9.00 SF	12.75 SF	2.84 Ft.
30X18	3.75 SF		

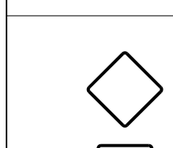

Size	Area	Total Area	Centroid
30X30	6.25 SF	10.25 SF	2.74 Ft.
24X24	4.00 SF		

Size	Area	Total Area	Centroid
36X36	9.00 SF	15.25 SF	3.29 Ft.
30X30	6.25 SF		

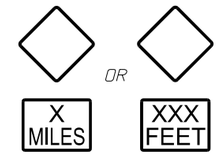

Size	Area	Total Area	Centroid
30X30	6.25 SF	9.25 SF	2.51 Ft.
24X18	3.00 SF		

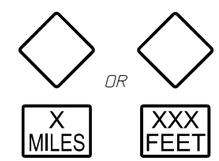

Size	Area	Total Area	Centroid
36X36	9.00 SF	14.00 SF	3.06 Ft.
30X24	5.00 SF		

C:\d\projects\standards\roadway\11000-s\11860-08.dgn
rd960rh
2:16:02 PM
6/28/2012

LAST REVISION	REVISION	DESCRIPTION:				
07/01/07			FDOT DESIGN STANDARDS 2013	SINGLE COLUMN GROUND SIGNS	INDEX NO. 11860	SHEET NO. 8

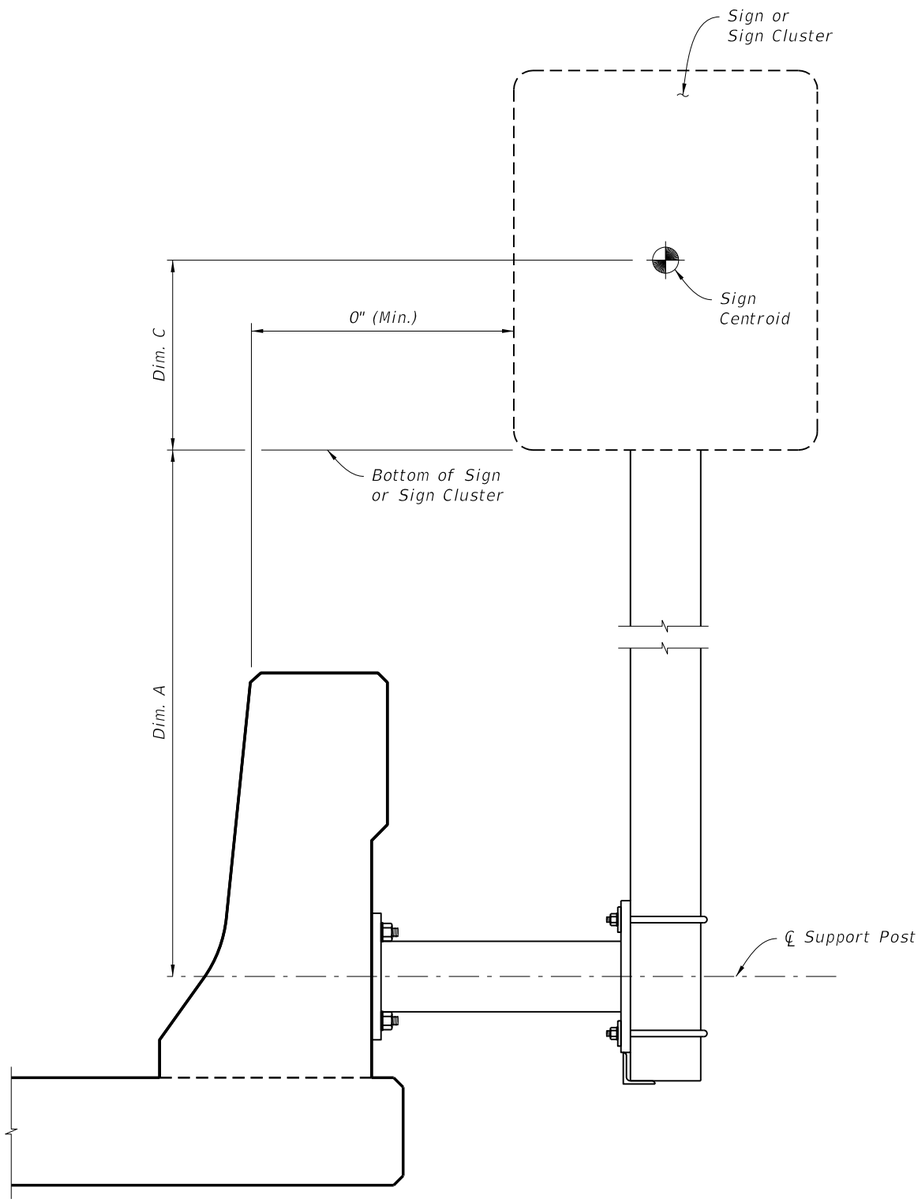

SIGN SUPPORT BRACKET

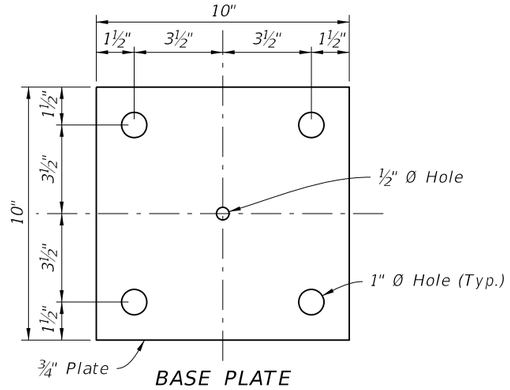

BASE PLATE

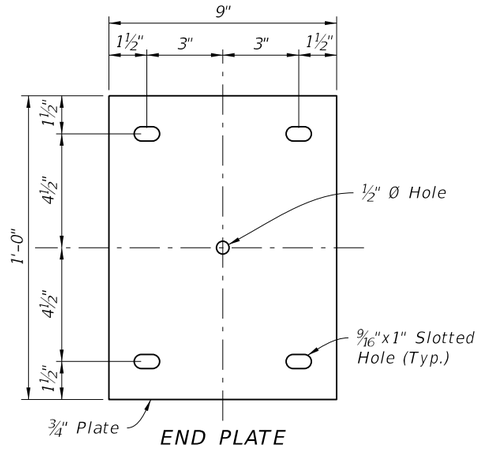

END PLATE

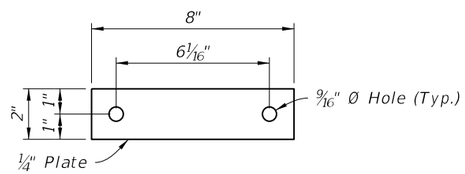

U-BOLT PLATE WASHER

NOTES:

DESIGN SPECIFICATIONS: AASHTO Standard Specifications for Structural Supports for Highway Signs, Luminaires and Traffic Signals as modified by the FDOT Structures Manual.

WIND SPEEDS: See Index 11860, "Wind Speeds by County" note.

GEOMETRY: Install signs with bottom edge of the lower sign panel at 7' above the gutter line. Edge of sign panels must not extend beyond the inside face of the top of the traffic railing. Install sign posts plumb.

APPLICABILITY: Mount only to concrete traffic barriers in locations where ground mounting is not possible. Work this Index in conjunction with Index No. 11860.

SHOP DRAWINGS: Shop drawings are not required.

PAYMENT: Include payment for sign support bracket in the cost of the single post sign.

MATERIALS:

Coatings: Hot dip galvanize all steel and fasteners in accordance with Specification Section 962. Galvanize Sign Support Weldment after fabrication. Paint sign support brackets and posts when shown in the plans in accordance with Specification Section 649-4.

Support Post: ASTM A501 5" NPS Schedule 40 Steel Pipe.

Sign Post: Aluminum Association Alloy 6061-T6 (ASTM B209, B221 or B308) 5" NPS Schedule 40 Aluminum Pipe.

Steel Plates: ASTM A36 or A709 Grade 36.

Anchor Rods & Bolts: ASTM F1554 Grade 55 with a single self-locking hex nut and washers. Install anchor rods or bolts perpendicular to the base plates on back of traffic railing. See Anchorage Notes, Sheet 2 of 2.

Adhesive Bonded Anchors: Fully threaded Anchor Rods with Type HV Adhesive Bonding Material System in accordance with Specification Section 416 & 937. In lieu of the number of anchors specified to be tested in Specification Section 416-6, field test all adhesive bonded anchors installed per this Design Standard.

U-Bolts: ASTM A449 sized for sign post, with flat washers and locking hex nuts.

Welding: Weld in accordance with American Welding Society Structural Welding Code (Steel), ANSI/AWS D1.1 (current edition). Required weld material is E70XX. Nondestructive testing is not required.

SIGN LIMITATIONS TABLE		
MAX. WIND SPEED (MPH)	MAX. SIGN AREA (SF)	MAX. SIGN CENTROID HEIGHT (DIM. A + DIM. C)
110	30	9'-10"
130	25	9'-7"
150	20	9'-7"

Dim. A = Distance from centerline of the Support Post to the bottom of the sign or sign cluster.

Dim. C = Vertical distance from the bottom of the sign or sign cluster to the Centroid of the sign or sign cluster.

6/28/2012 2:16:04 PM rd960rh C:\d\projects\standards\structures\2013book\11870-1of2.dgn

LAST REVISION	REVISION	DESCRIPTION:		FDOT DESIGN STANDARDS 2013	SINGLE POST BRIDGE MOUNTED SIGN SUPPORT	INDEX NO.	SHEET NO.
07/01/12						11870	1

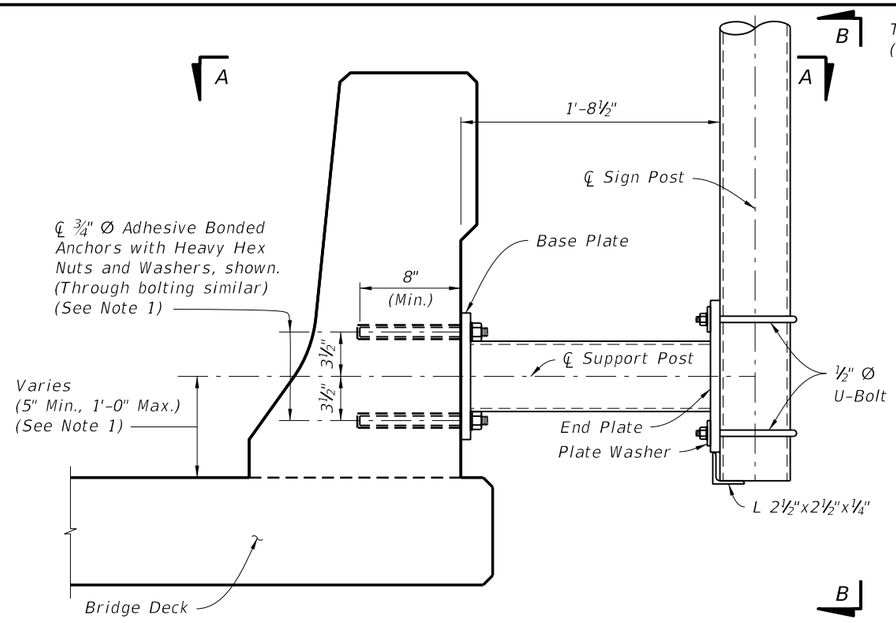

TYPICAL SECTION THRU EXISTING TRAFFIC RAILING AT SIGN SUPPORT BRACKET
(32" F-Shape Traffic Railing shown, other Traffic Ralings & Parapet similar)
(Bridge Deck shown, Approach Slab and Retaining Wall Similar)

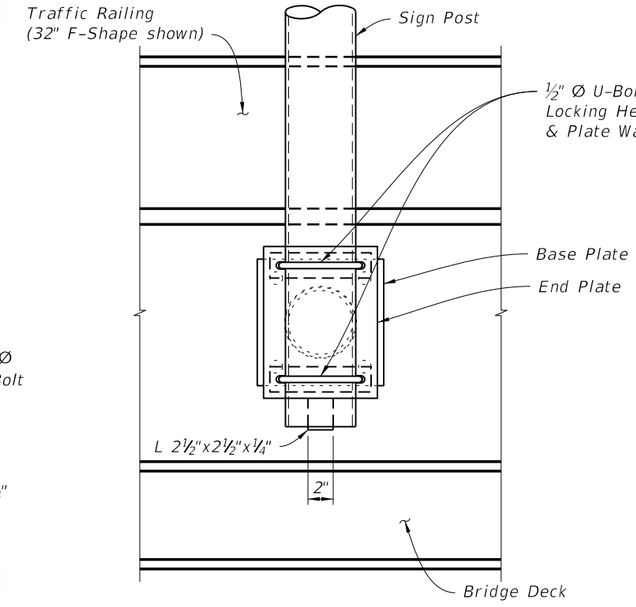

VIEW B-B
SIGN SUPPORT BRACKET

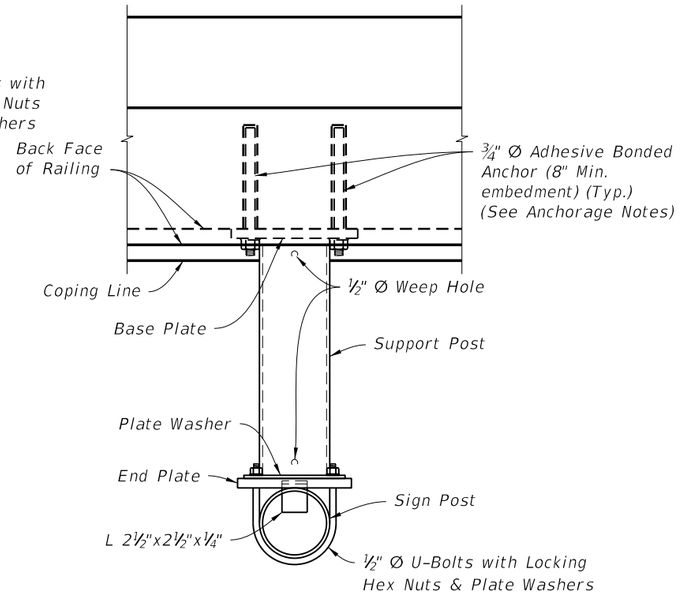

PLAN VIEW A-A
SIGN SUPPORT BRACKET

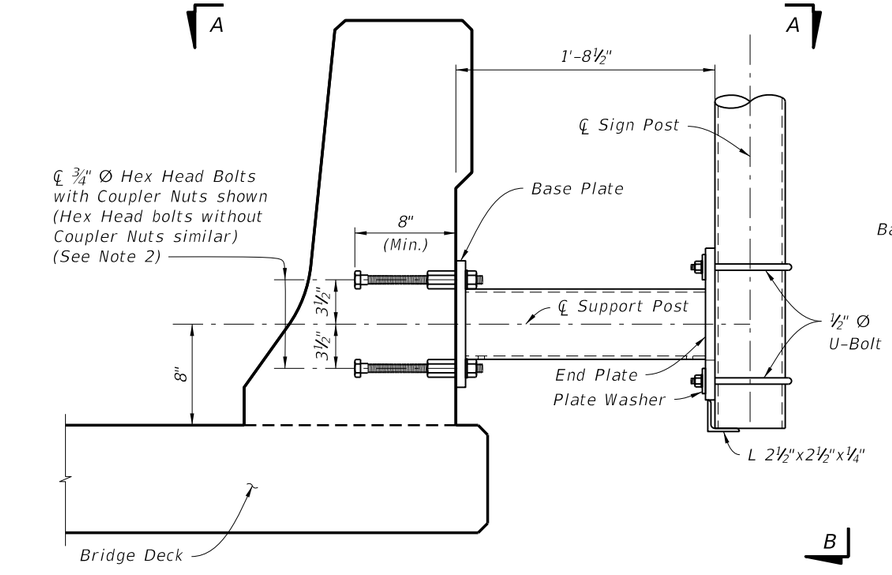

TYPICAL SECTION THRU TRAFFIC RAILING AT SIGN SUPPORT BRACKET (NEW CONSTRUCTION)
(32" F-Shape Traffic Railing shown, other Traffic Ralings & Parapet similar)
(Bridge Deck shown, Approach Slab and Retaining Wall Similar)

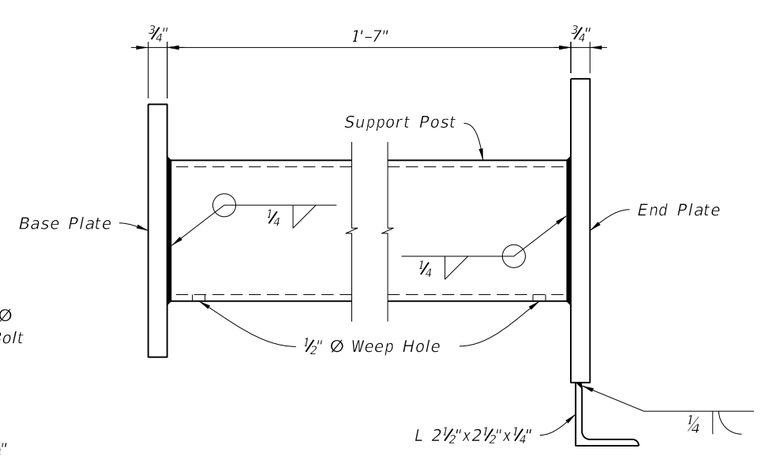

SIGN SUPPORT WELDMENT DETAIL

ANCHORAGE NOTES:

1. *Existing Traffic Railings:*

   Locate existing conduit prior to drilling. Adjust placement as necessary to avoid existing conduit. Base plate must be flush with back of traffic railing. Maintain a minimum cover 2" from face of traffic railing to tip of Adhesive Anchor.

   For concrete parapets less than 10" thick, through bolt ¾" Ø Heavy Hex Head Bolts with Nuts and Washers in lieu of Adhesive Bonded Anchors. Bolt heads shall not protrude more than 1½" beyond traffic face of railing.

2. *New Traffic Railings:*

   Tie Anchor Bolts securely and use templates as necessary to maintain bolt spacing.

   Optional Couplers are shown for slipforming; keep Anchor Bolt coupler threads free of concrete.

CROSS REFERENCES:
For Base Plate, End Plate & U-Bolt Plate Washer Details see Sheet 1.

C:\d\projects\standards\structures\2013book\11870-2of2.dgn
rd960rh
2:16:06 PM
6/28/2012

LAST REVISION	REVISION	DESCRIPTION:		FDOT DESIGN STANDARDS 2013	SINGLE POST BRIDGE MOUNTED SIGN SUPPORT	INDEX NO.	SHEET NO.
07/01/12						11870	2

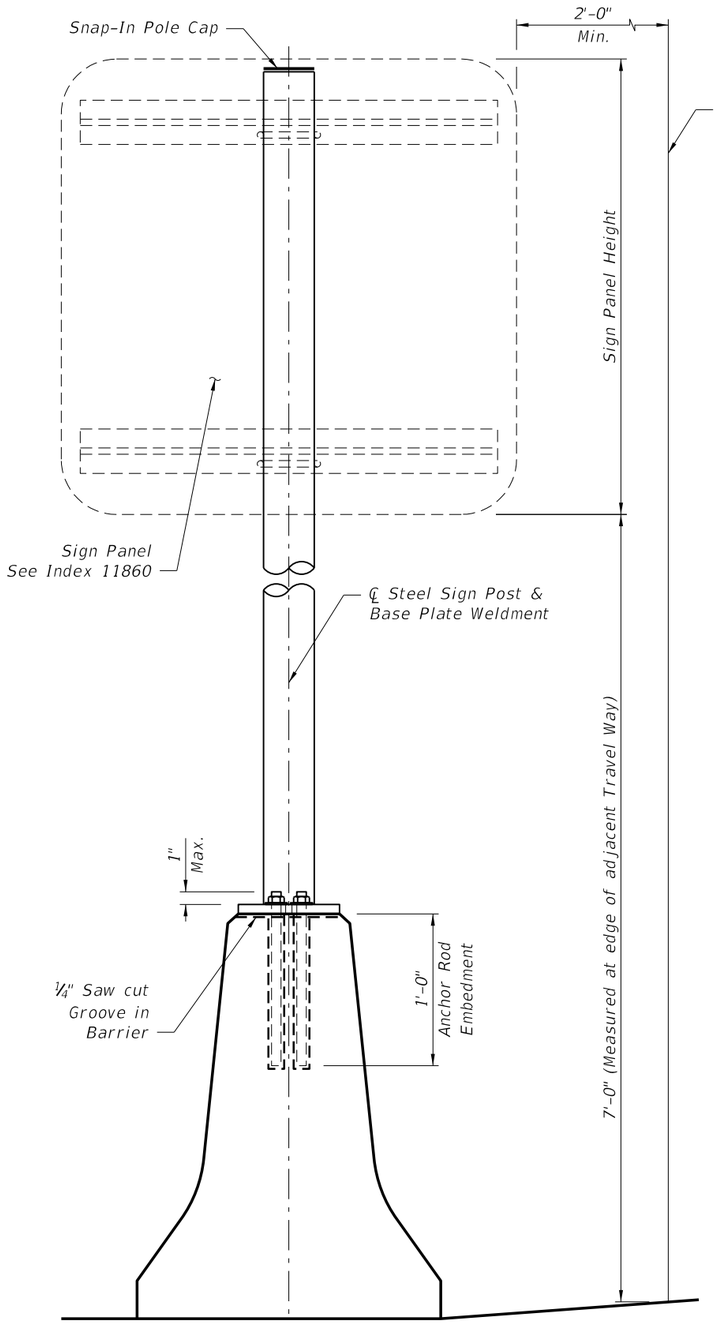

LOOKING PARALLEL TO DIRECTION OF TRAFFIC

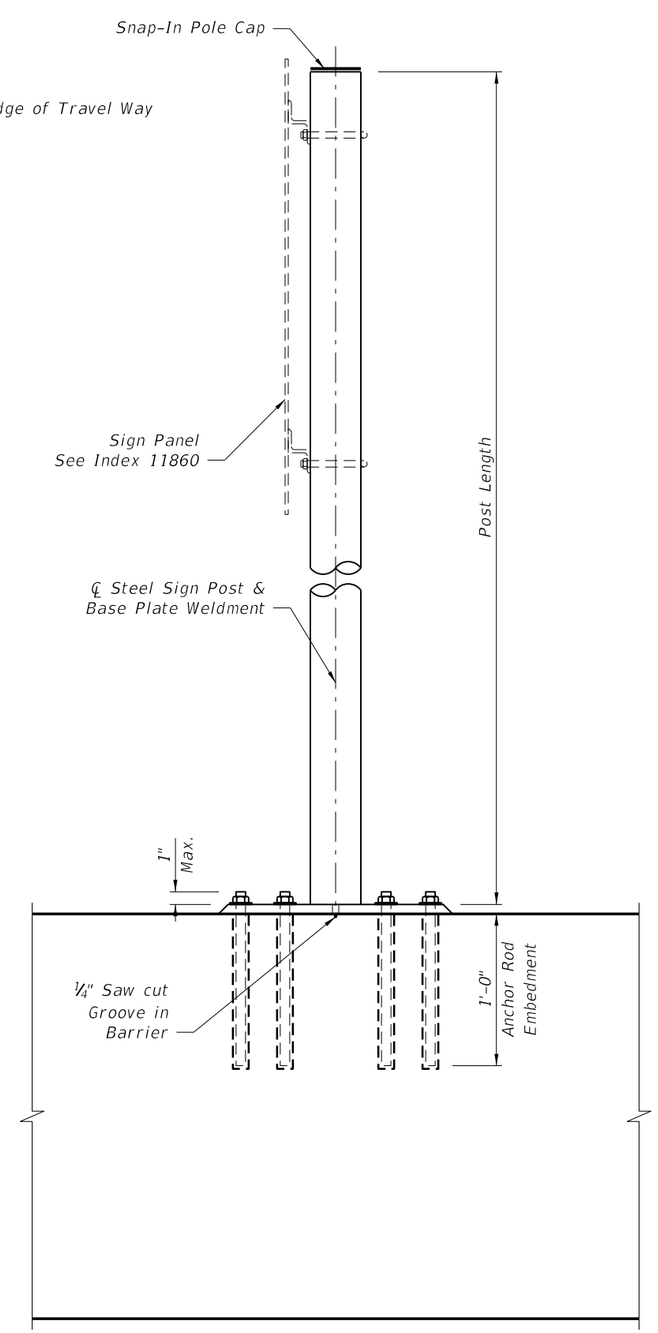

LOOKING PERPENDICULAR TO DIRECTION OF TRAFFIC

ELEVATION

(Index 410 Standard "Full Wall" Median Barrier shown; others similar)

NOTES:

DESIGN SPECIFICATIONS:
AASHTO Standard Specifications for Structural Supports for Highway Signs, Luminaires and Traffic Signals as modified by the FDOT Structures Manual.

WIND SPEEDS:
See Index 11860, "Wind speeds by County" note.

GEOMETRY:
Maximum Sign Panel Height is 6'-0".
Edges of Sign Panels must be a minimum of 2'-0" clear from edge of adjacent Travel Way.

APPLICABILITY:
Work this Index in conjunction with Index No 11860.

SHOP DRAWINGS:
Shop drawings are not required.

PAYMENT:
Include payment for sign support in the cost of the single post sign assembly.

MATERIALS:
Sign Post: ASTM A53 Grade B, NPS Schedule 40 Steel Pipe, sized per Table 1. Maximum post length is 10'-0".

Snap-In Pole Cap: Provide UV and weather-resistant glass-filled polyester cap.

Steel Plates: ASTM A572 Grade 50 or A709 Grade 50.

Welding: Weld in accordance with American Welding Society Structural Welding Code (Steel), ANSI/DWS D1.1 (current edition). Required weld material is E70XX. Nondestructive testing is not required.

Coatings: Hot dip galvanize all steel, including fasteners, in accordance with Section 962. Galvanize Weldment after fabrication.

INSTALLATION:
Placement: For installations on permanent Median Barriers, locate Sign Support a minimum of 5'-0" away from open joints or transitions. For installations on Temporary Barriers, locate Sign Support at the midpoint along the length of a single segment. In all cases, shift locations as needed to avoid conflicts with reinforcement.

Bearing Surface: Surface of the railing must be structurally sound and free of cracks and spalls. Base plate must be flush with the concrete surface; grind any high spots to obtain a flat, smooth surface.

Saw Cut: For permanent installations only, saw cut a ¼" deep groove transversely across the top of railing at the centerline of base plate vent hole location.

Anchor Rods: Use ASTM F1554 Grade 36, fully threaded rods with A563 or A194 single self-locking hex nuts and F436 washers. Size anchor rods per Table 2.

Adhesive Bonding Material: Install anchor rods using Type HSHV Adhesive Bonding Material System in accordance with Sections 416 & 937.

Removal of Signs: Cut anchor rods flush with top of railing and coat surface with Type F-1 epoxy. Minimum thickness of epoxy is 1/16" extending 2" beyond the location of steel.

TABLE 1 - SIGN PANEL AND POST SIZING

Wind Speed (MPH)	Max. Sign Area (SF)	Post Ø (NPS)
70 - All Temporary Signs	< 20	3.0"
110 & 130	< 13.5	3.0"
	13.5 < Sign < 20	3.5"
150	< 13.5	3.5"
	13.5 < Sign < 20	4.0"

6/28/2012 2:16:09 PM rd960rh C:\d\projects\standards\roadway\11000-s\11871-1of2.dgn

LAST REVISION	REVISION	DESCRIPTION:			INDEX NO.	SHEET NO.
07/01/12			FDOT DESIGN STANDARDS 2013	SINGLE POST MEDIAN BARRIER MOUNTED SIGN SUPPORT	11871	1

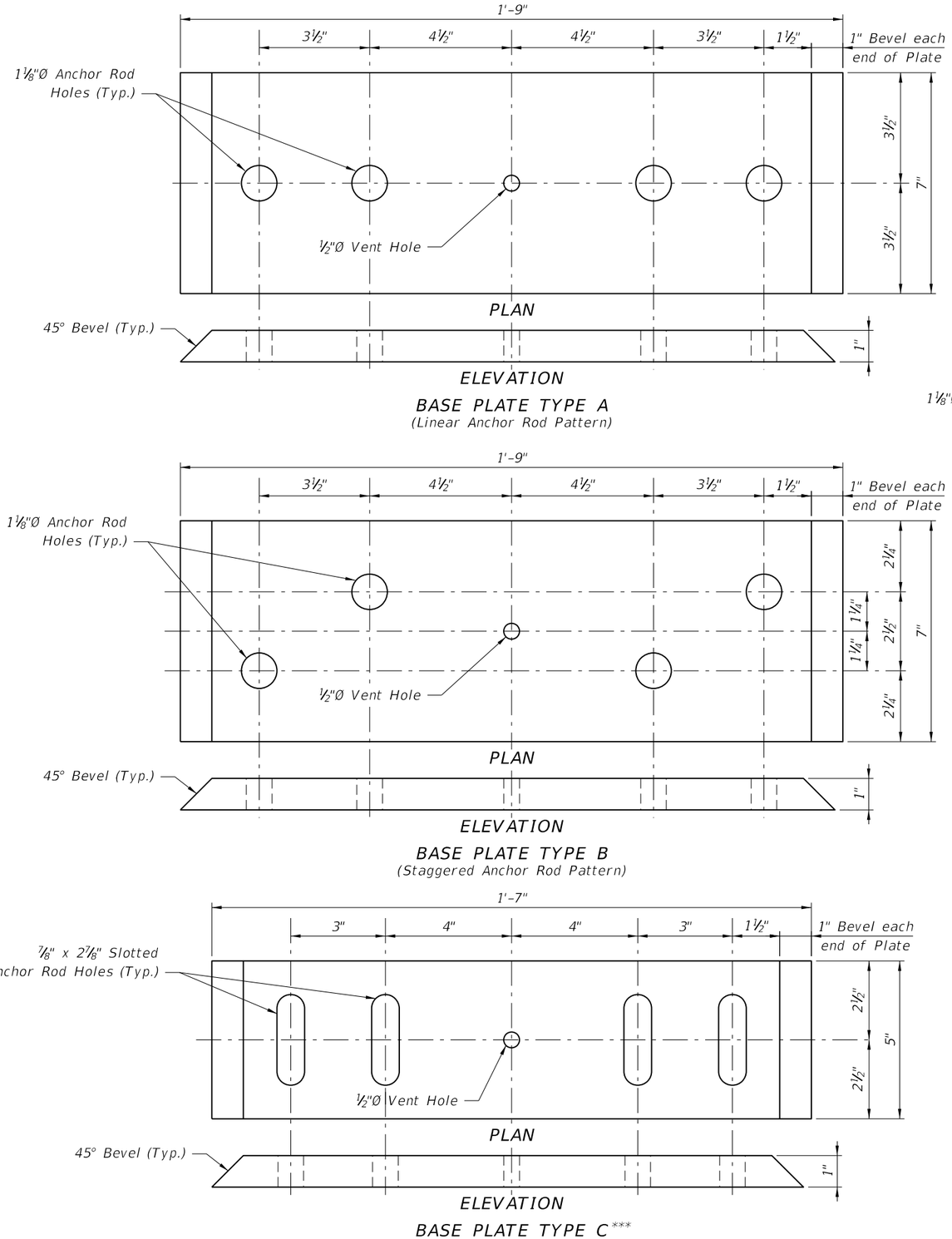

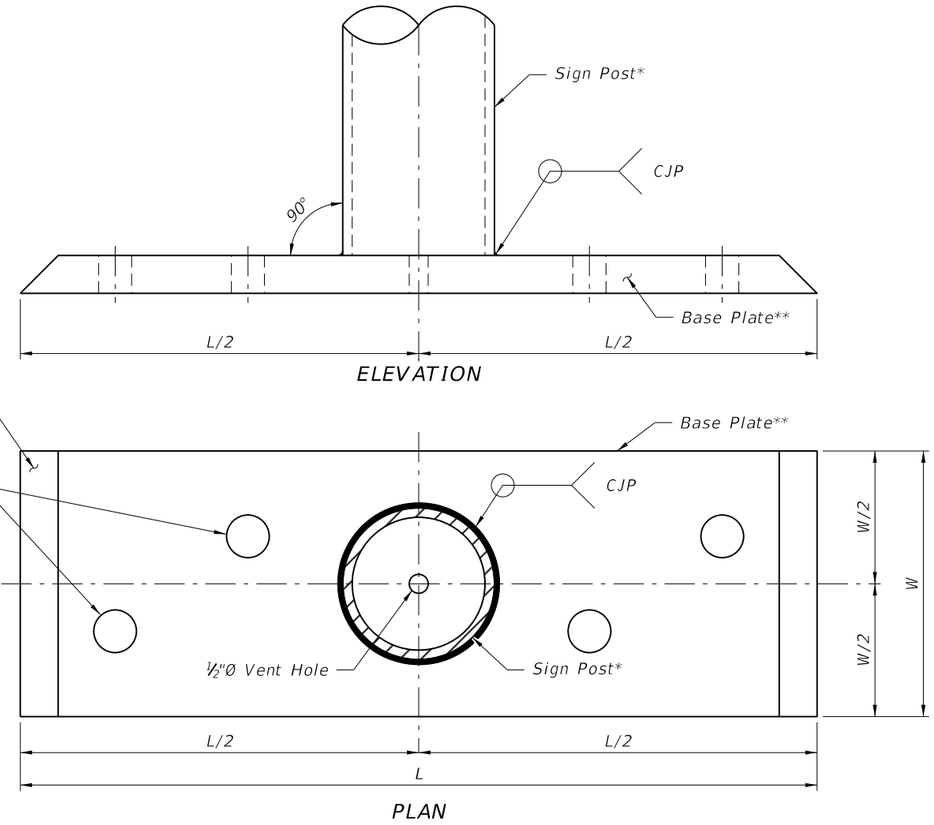

SIGN SUPPORT WELDMENT DETAIL
(Staggered Anchor Rod Pattern shown; Linear Anchor Rod Pattern similar)

* See Table 1, Sheet 1.
** See Table 2, this Sheet.

TABLE 2 - BASE PLATE TYPE AND ANCHOR ROD SIZING

Index No.	Type/Application	Base Plate Type	Anchor Rod Ø
410	Full Wall	B	1"
410	Cantilever or L-Wall	A	
420 & 425	When Clear Space between Dual Bridge Traffic Railing is ≤ 4'-0"	A	
421	All Applications	A	
All listed above Plus 414 & 415	Temporary Signs	C ***	¾" ***

*** Place anchor rods in a staggered or linear pattern as necessary to avoid reinforcing. Use a staggered pattern for all temporary barriers.

C:\d\projects\standards\roadway\11000-s\11871-2of2.dgn rd960rh 2:16:11 PM 6/28/2012

LAST REVISION	REVISION	DESCRIPTION:			INDEX NO.	SHEET NO.
07/01/12			FDOT DESIGN STANDARDS 2013	SINGLE POST MEDIAN BARRIER MOUNTED SIGN SUPPORT	11871	2

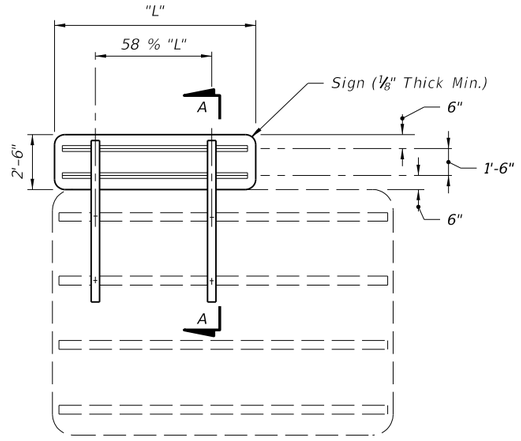

NOTE: Exit numbering panel shall be located to the right side for right exit and to the left for left exit.

Mounting of Exit Numbering Panels To Highway Signs

ELEVATION

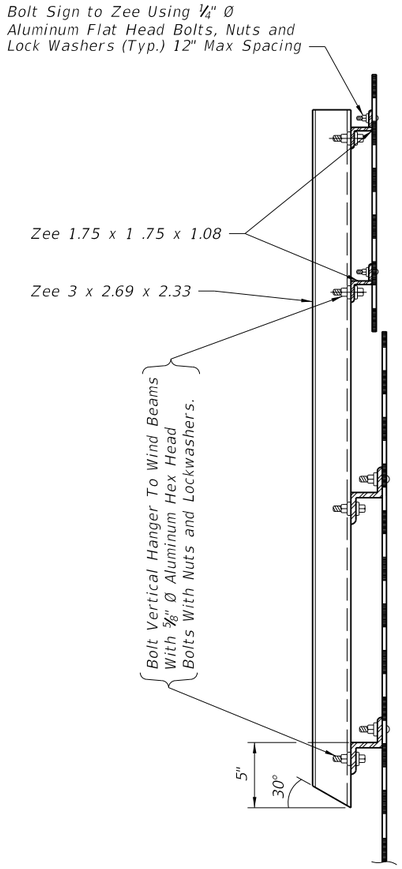

SECTION AA

GENERAL NOTES

DESIGN SPECIFICATION:
Design according to FDOT Structures Manual (current edition) Standard Specifications for Structural Supports for Highway Signs, Luminaires and Traffic Signals, AASHTO 2001.

SHEETS AND PLATES:
Material used shall meet the requirements of Aluminum Association Alloy 6061-T6 and ASTM B209.

MATERIALS:
All aluminum materials shall meet the requirements of the Aluminum Association Alloy 6061-T6 and also the following ASTM specifications for the following: Sheets and plates B209; extruded shapes B221 and standard structural shapes B308.

ALUMINUM BOLTS, NUTS & LOCK WASHERS:
Aluminum bolts shall meet the requirements of the Aluminum Association Alloy 2024-T4 (ASTM F468). The bolts shall have an anodic coating of at least .0002" thick and be chromate sealed. Lockwashers shall meet the requirement of Aluminum Association Alloy 7075-T6 (ASTM B221). Nuts shall meet the requirement of Aluminum Association Alloy 6262-T9 (ASTM F467) or 6061-T6.

SIGN FACE:
All sign face corners shall be rounded. See sign layout sheet for dimension "L" and sign face details. For mounting details refer to Index No. 11300.

6/28/2012 2:16:14 PM rd960rh C:\d\projects\standards\roadway\13000-s\13417-01.dgn

LAST REVISION	REVISION	DESCRIPTION:		FDOT DESIGN STANDARDS 2013	MOUNTING EXIT NUMBER PANELS TO HIGHWAY SIGNS	INDEX NO.	SHEET NO.
01/01/10						13417	1

CASE I

For Use On Freeway And
Expressway Systems For Signs On Mainline.

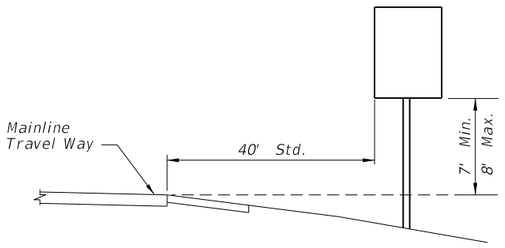

For Median Installation:
If Median Width Does Not Allow Std. Offset
From Both Roadways, Center Sign In Median.

CASE II

For Use In All Rural Roads And
On Freeway And Expressway Ramps.

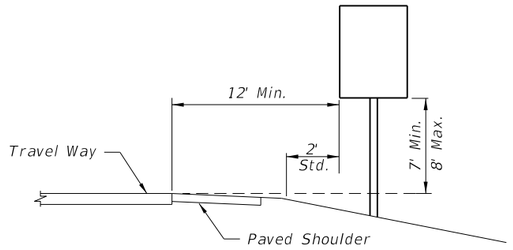

14' Horizontal Clearance Standard On All Freeway And
Expressway Ramps.

CASE III

For Use On All Roads With
Signs Mounted Behind Sidewalk.

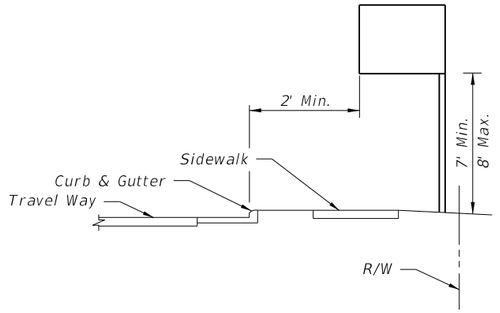

GENERAL NOTES:

1. The typical sections shown hereon serve as a guide for locating the traffic signs required under various roadside conditions. For size and details of sign construction and footing, refer to the appropriate standard index drawing for roadside sign.

2. It shall be the CONTRACTORS responsibility to verify the length of sign supports in the field prior to fabrication.

3. Ground signs shall be installed at an angle of 1 to 4 degrees away from the traffic flow (see illustration). Shoulder mounted signs shall be rotated counterclockwise and median mounted signs rotated clockwise. Signs on curves shall be mounted as noted above from the perpendicular to the motorist line of sight.

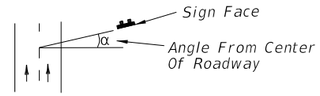

CASE IV (MERGE SIGN)

For Use On All Rural, Freeway And Expressway Systems.

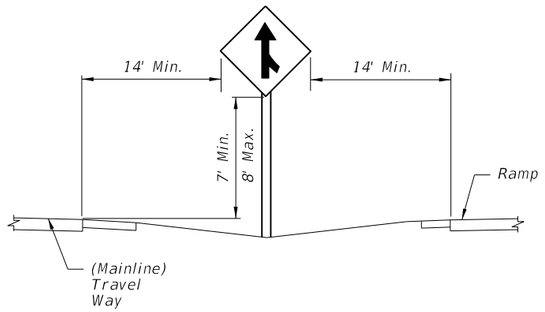

CASE V

For Use In Business Or Residential Areas Only.

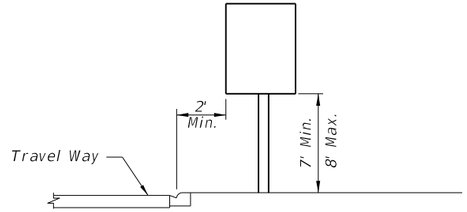

CASE VI

For Use On All Roadways
With Signs Behind Guardrail.

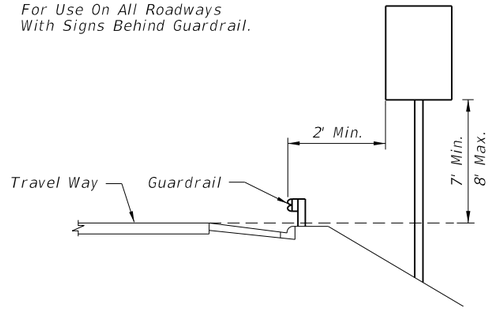

GENERAL NOTES (continued):

4. The setback for stop and yield signs may be reduced to 3' minimum from the driving lane if required for visibility in business or residential sections with no curb and speeds of 30 MPH or less.

5. The mounting heights are measured from the bottom of the sign panel to a horizontal line extended from the edge of the driving lane. If the standard heights cannot be met, the minimum heights are as follows:

Expressway & Freeway Systems	7'
Other Roadway Systems	
Rural	5'
Urban (including residential with parking and /or pedestrian activity)	7'

If a secondary sign is mounted below the major sign, the major sign shall be at least 8' and the secondary sign at least 5' for expressway & freeway systems and for other systems the height to the secondary sign shall be at least 5' for rural and 7' for urban sections.

6. Sign supports should never be placed in the bottom of ditches where erosion might affect the proper operation of the breakaway feature.

7. Sign supports shall not reduce the accessible route /continuous passage to less than 4' min. clear width as required by the Americans with Disabilities Act (ADA) Accessibility Guidelines.

CASE VII (REST AREA & EXIT GORE SIGNS)

For Use On All Freeway And Expressway Systems

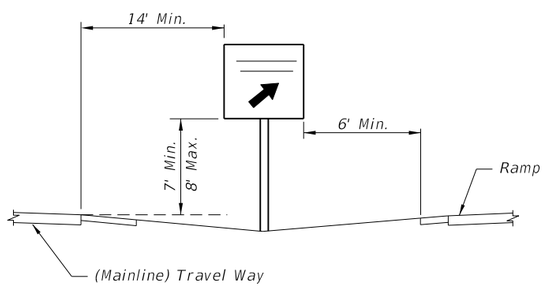

CASE VIII

Sign On Island or Curbed Median

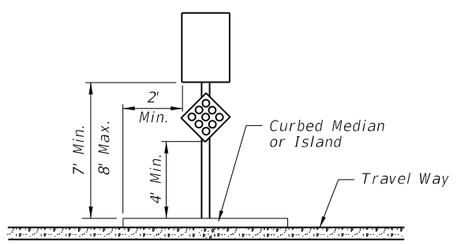

Center Sign Column On Island

CASE IX (MILE POST MARKER)

For More Information
Refer To Section 2H
Of The Manual On
Uniform Traffic
Control Devices

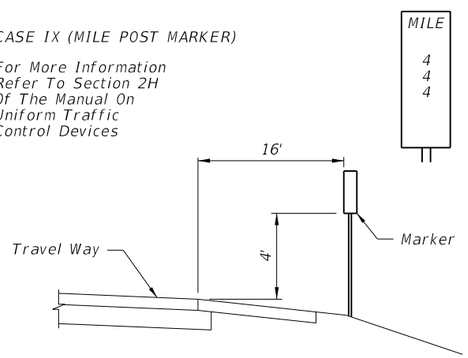

C:\d\projects\standards\roadway\17300-s\17302-01.dgn
rd960rh
2:16:16 PM
6/28/2012

LAST REVISION	REVISION	DESCRIPTION:			INDEX NO.	SHEET NO.
01/01/12			FDOT DESIGN STANDARDS 2013	TYPICAL SECTIONS FOR PLACEMENT OF SINGLE & MULTI-COLUMN SIGNS	17302	1

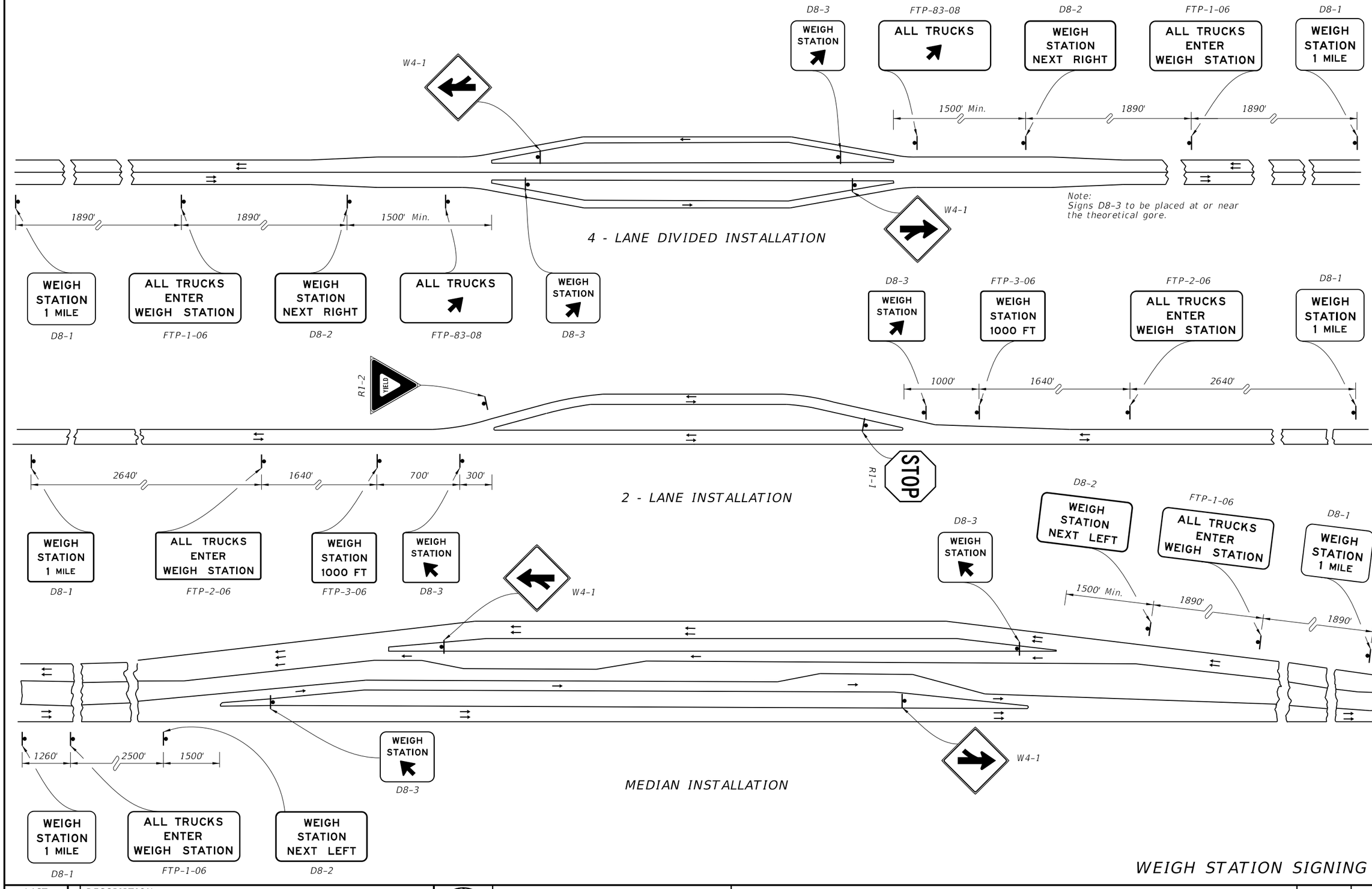

WEIGH STATION SIGNING

C:\d\projects\standards\roadway\17300-s\17328-01.dgn
rd960rh
2:16:18 PM
6/28/2012

LAST REVISION	REVISION	DESCRIPTION:		FDOT DESIGN STANDARDS 2013	TYPICAL SIGNING FOR TRUCK WEIGH & INSPECTION STATIONS	INDEX NO.	SHEET NO.
07/01/09						17328	1

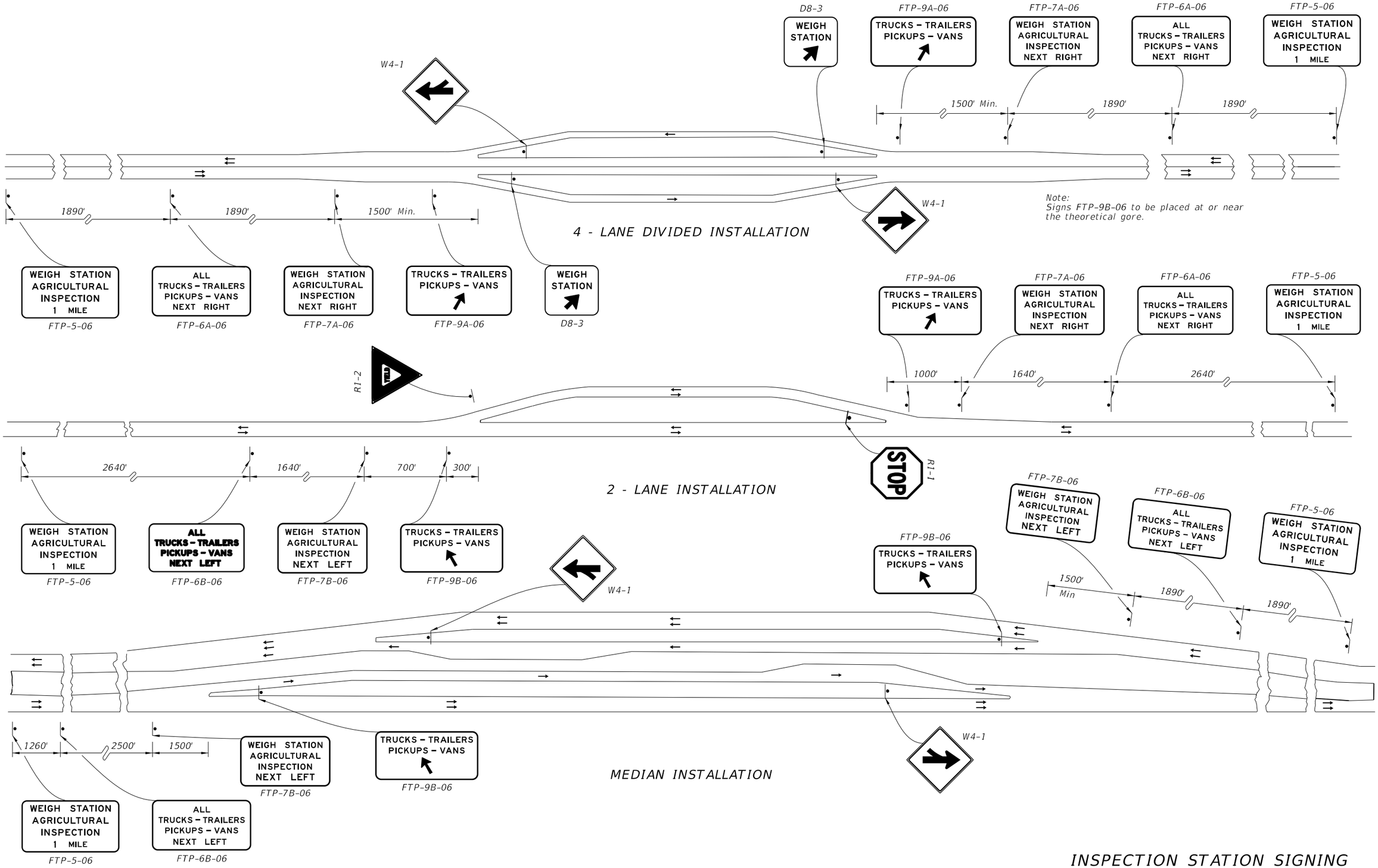

INSPECTION STATION SIGNING

C:\d\projects\standards\roadway\17300-s\17328-02.dgn
rd960rh
2:16:21 PM
6/28/2012

LAST REVISION	REVISION	DESCRIPTION:			INDEX NO.	SHEET NO.
07/01/09			FDOT DESIGN STANDARDS 2013	TYPICAL SIGNING FOR TRUCK WEIGH & INSPECTION STATIONS	17328	2

Approach Speed (MPH)	Distance A (FT.)
25 or Less	200
26 To 35	250
36 To 45	300
46 To 55	325

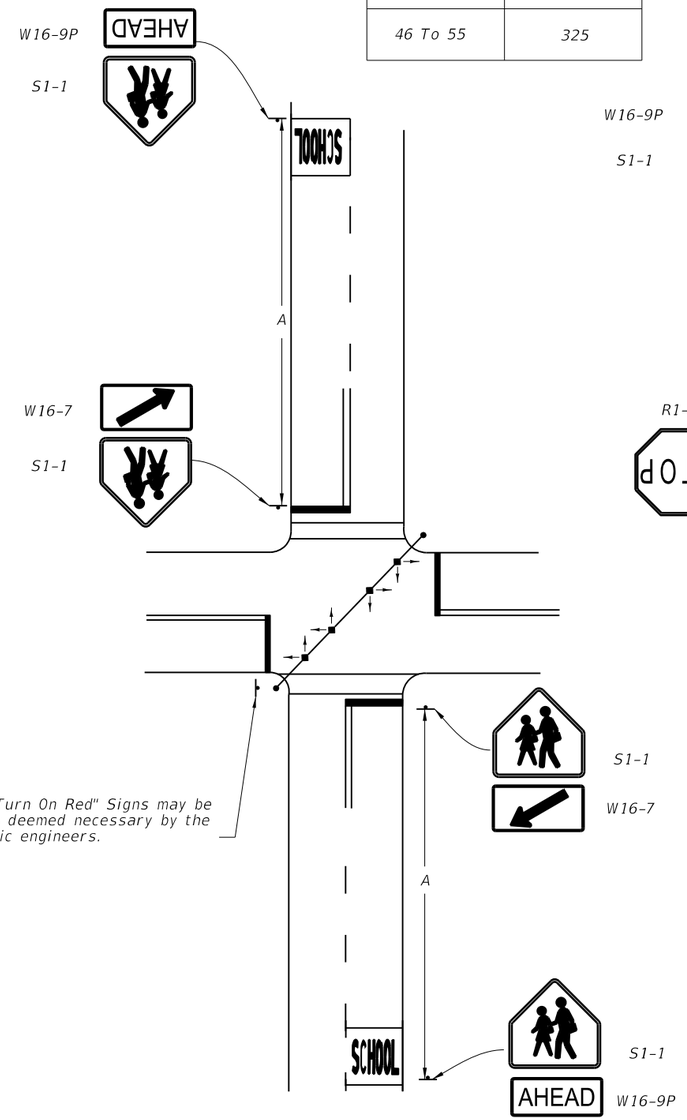

1. TRAFFIC CONTROL DEVICES FOR A SCHOOL CROSSWALK AT A SIGNALIZED INTERSECTION

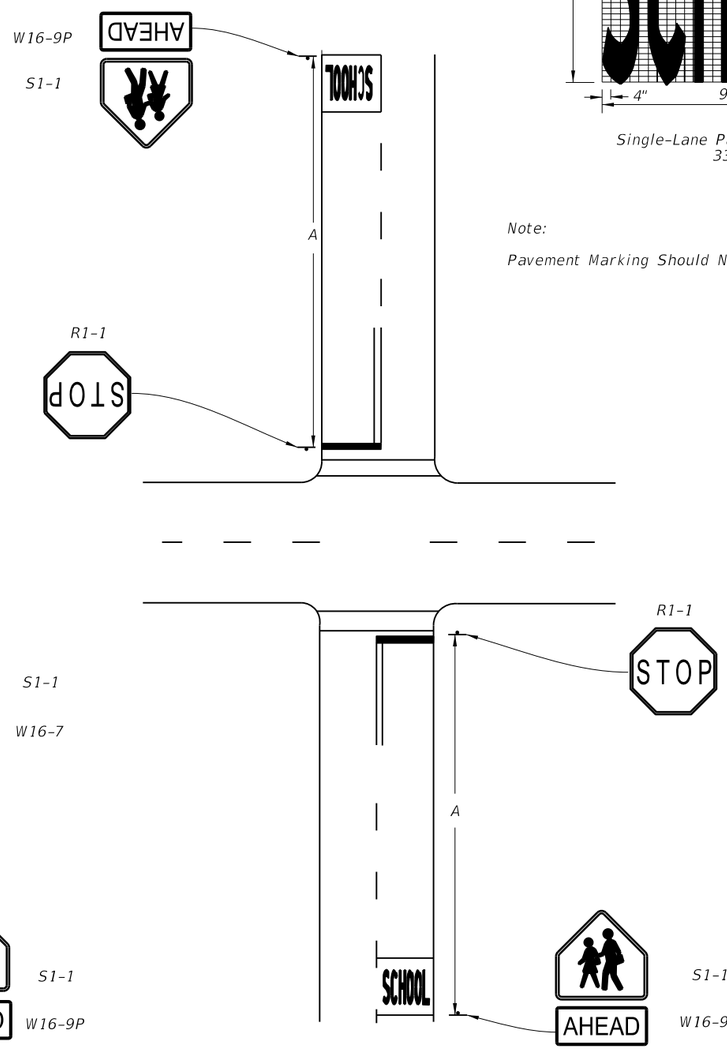

2. TRAFFIC CONTROL DEVICES FOR A SCHOOL CROSSWALK AT A STOP CONTROLLED INTERSECTION

Note:
Special speed restrictions are not normally applicable to these two cases.

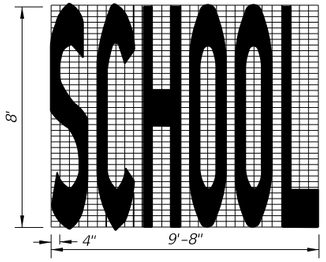

Single-Lane Pavement Marking
33 s.f.

Note:

Pavement Marking Should Not Extend Into Opposing Lane.

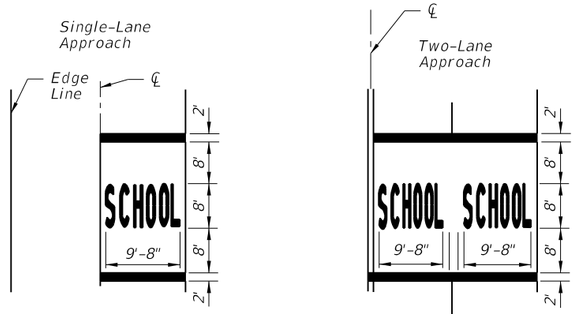

Multi-Lane Approch (Three or More)

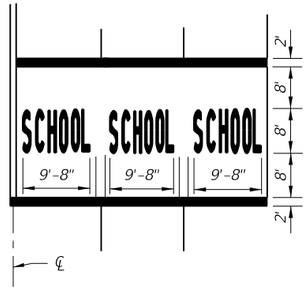

PAVEMENT MARKINGS

Notes:

Signs shall be erected in accordance with index No. 17302.

When computing pavement messages quantities do not include transverse lines.

School crosswalk widths at intersections shall be 6' minimum 10' standard without public sidewalk curb ramps 10' minimum with public sidewalk curb ramps. The width is measured from inside of line to inside of line,

For additional marking information, see Index 17346, Sheet 2.

C:\d\projects\standards\roadway\17300-s\17344-01.dgn
rd960rh
2:16:23 PM
6/28/2012

LAST REVISION	REVISION	DESCRIPTION:			INDEX NO.	SHEET NO.
01/01/12			FDOT DESIGN STANDARDS 2013	SCHOOL SIGNS & MARKINGS	17344	1

3. TRAFFIC CONTROL DEVICES FOR REDUCED SPEED ZONE AT A SCHOOL CROSSWALK 2 LANES-2 WAY TRAFFIC (40 MPH OR LESS) (MIDBLOCK OR ON THRU STREET AT AN INTERSECTION)

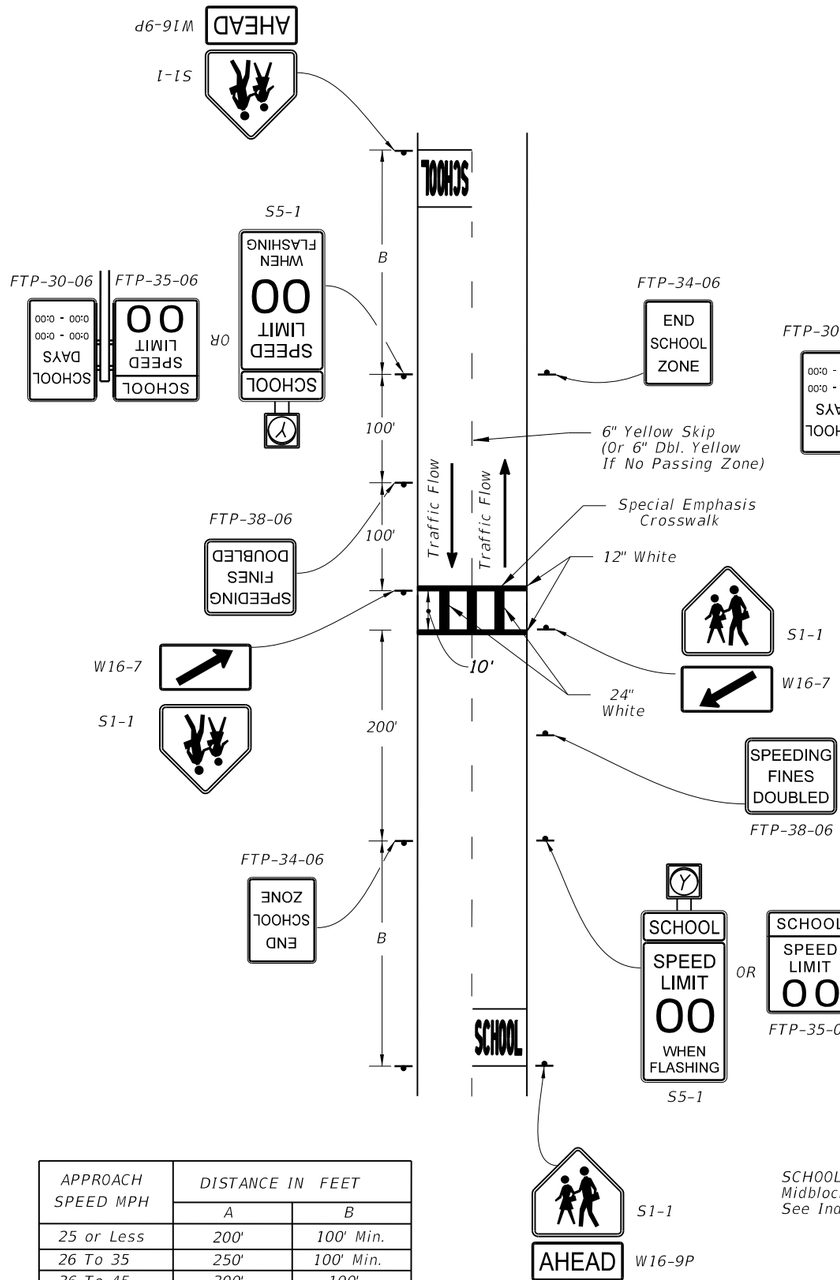

4. TRAFFIC CONTROL DEVICES FOR REDUCED SPEED ZONE AT A SCHOOL CROSSWALK 2 LANES-2 WAY TRAFFIC (45 MPH OR GREATER) (MIDBLOCK OR ON THRU STREET AT AN INTERSECTION)

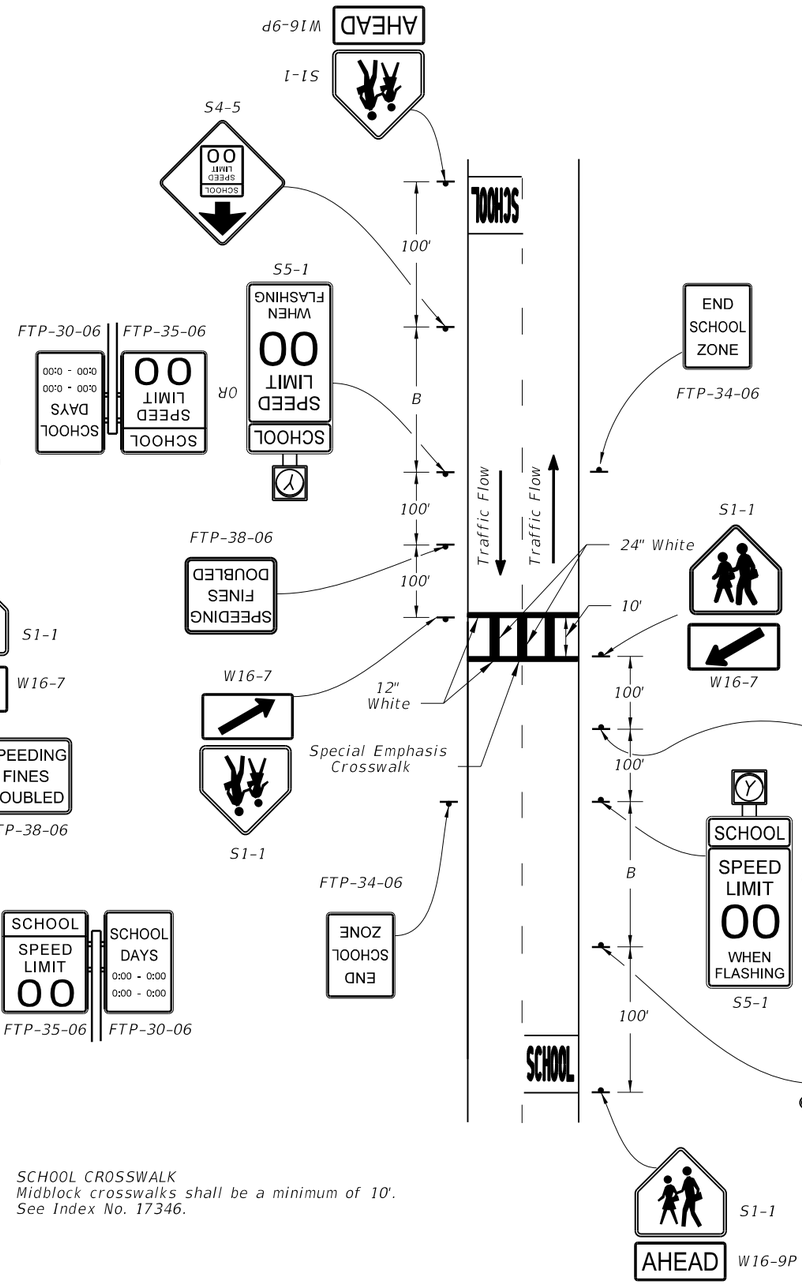

5. TRAFFIC CONTROL DEVICES FOR A SCHOOL CROSSWALK WITHOUT A SPEED REDUCTION (2 LANE-2 WAY TRAFFIC)

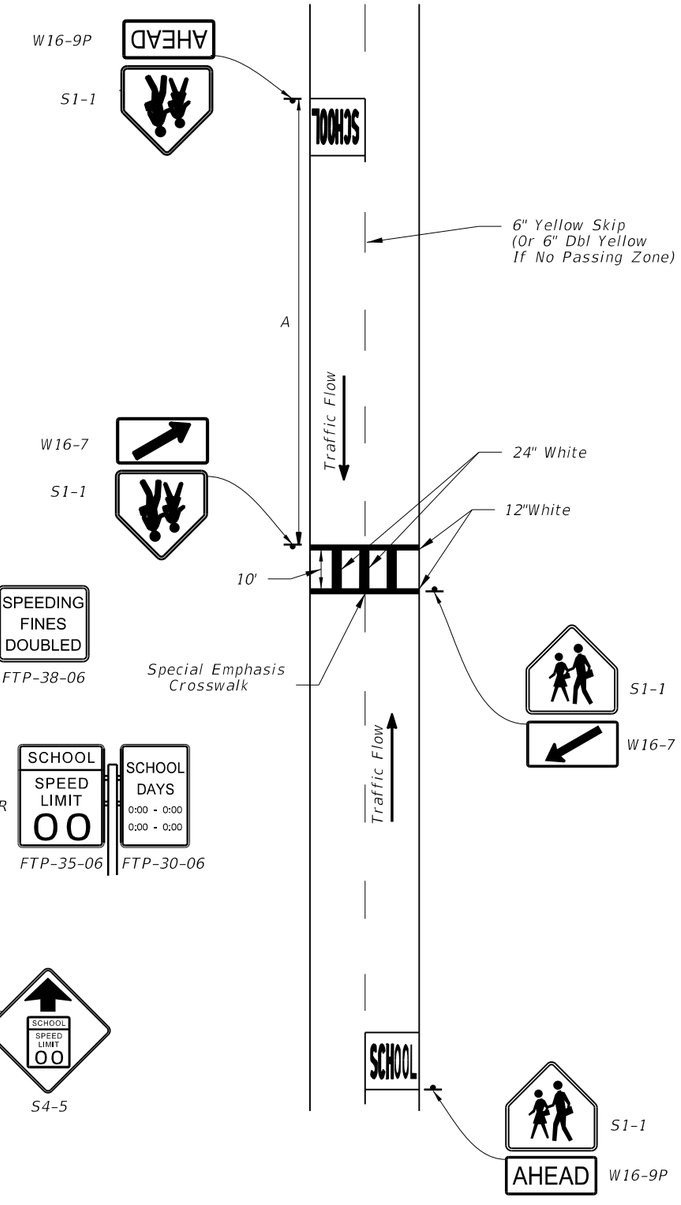

APPROACH SPEED MPH	DISTANCE IN FEET	
	A	B
25 or Less	200'	100' Min.
26 To 35	250'	100' Min.
36 To 45	300'	100'
46 To 55	325'	125'

SCHOOL CROSSWALK
Midblock crosswalks shall be a minimum of 10'.
See Index No. 17346.

C:\d\projects\standards\roadway\17300-s\17344-02.dgn
rd960rh
2:16:25 PM
6/28/2012

LAST REVISION	REVISION	DESCRIPTION:	FDOT DESIGN STANDARDS 2013	SCHOOL SIGNS & MARKINGS	INDEX NO.	SHEET NO.
01/01/12					17344	2

6. TRAFFIC CONTROL DEVICES FOR A REDUCED SPEED ZONE AT A SCHOOL CROSSWALK WITH OVERHEAD FLASHING BEACON SPEED LIMIT SIGNS (4 LANES UNDIVIDED-2 WAY TRAFFIC) (MIDBLOCK OR ON THRU STREET AT AN INTERSECTION)

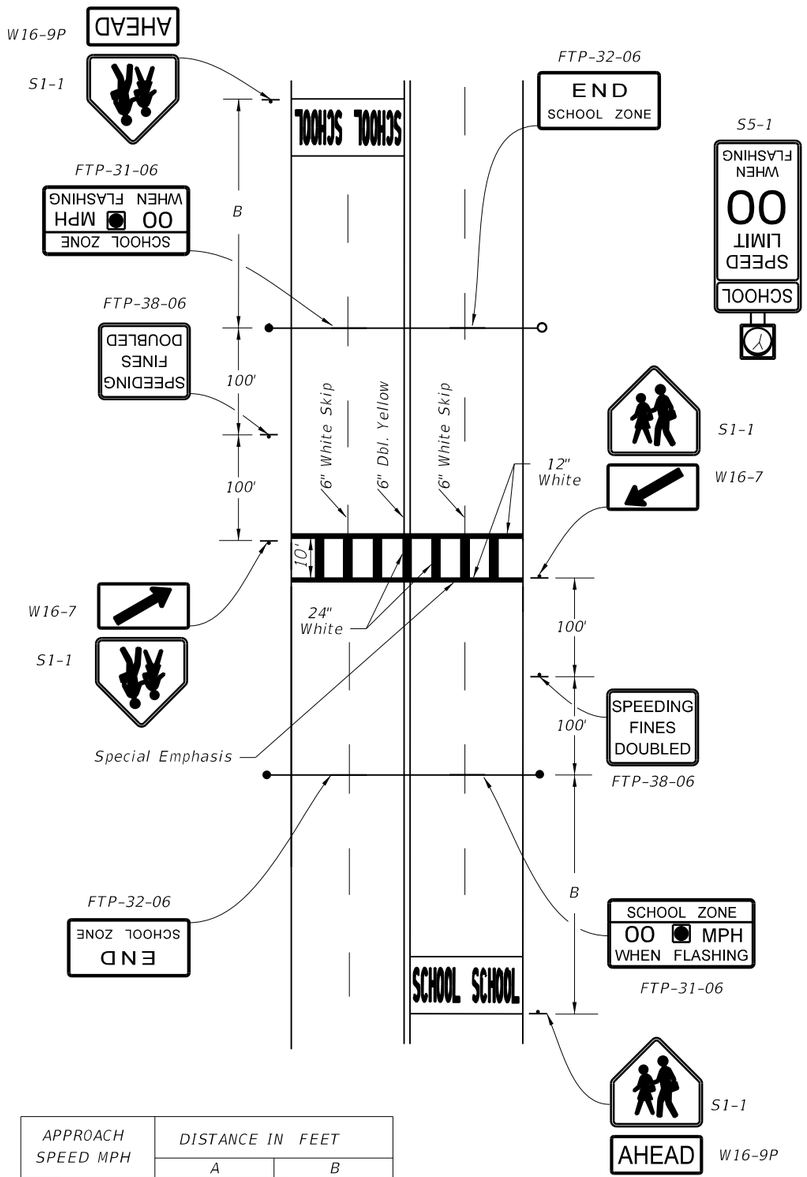

APPROACH SPEED MPH	DISTANCE IN FEET	
	A	B
25 or Less	200'	100' Min.
26 To 35	250'	100' Min.
36 To 45	300'	100'
46 To 55	325'	125'

SCHOOL CROSSWALK
Midblock crosswalk shall be a minimum of 10'.
See Index No. 17346.

7. TRAFFIC CONTROL DEVICES FOR A REDUCED SPEED ZONE AT A SCHOOL CROSSWALK WITH OVERHEAD OR GROUND MOUNTED FLASHING BEACON SPEED LIMIT SIGNS (4 LANES DIVIDED-2 WAY TRAFFIC)

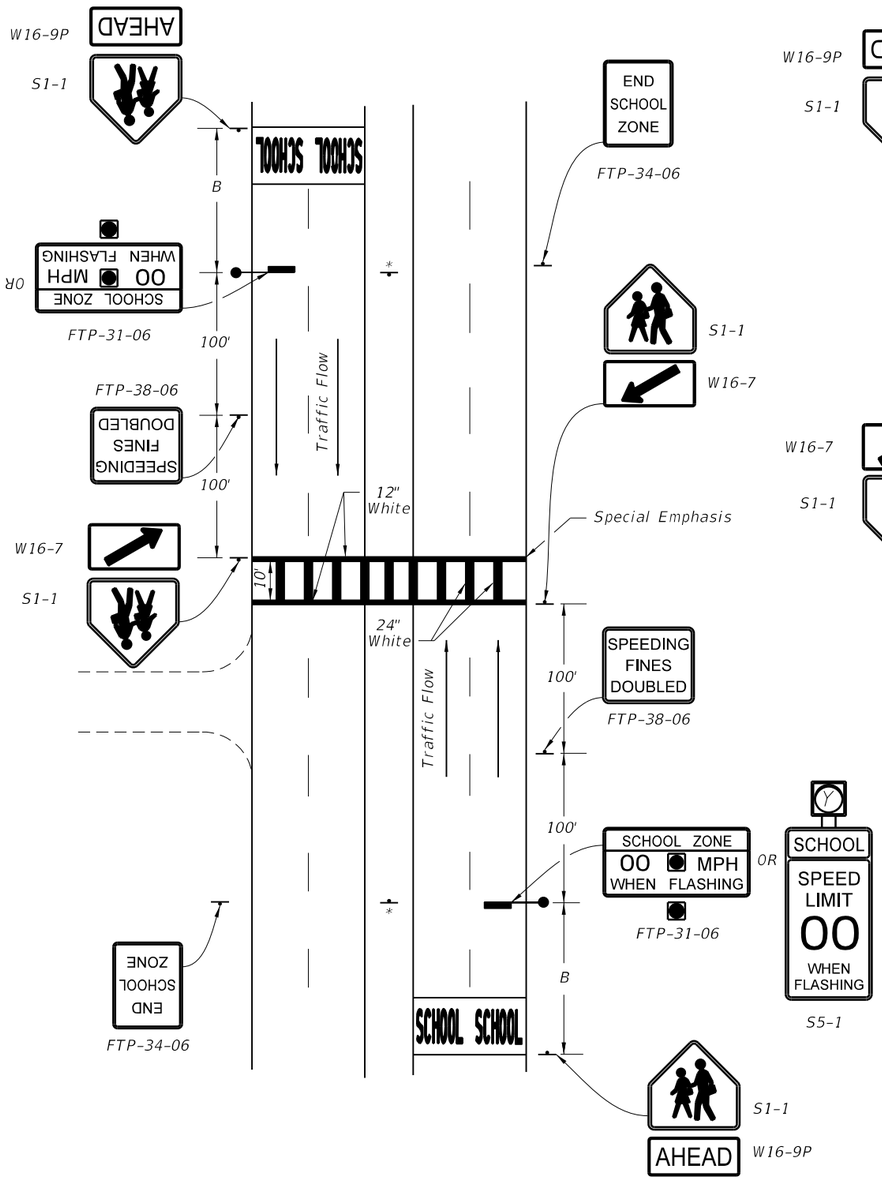

* NOTE- CONDITION 7:
Where engineering judgement determines the overhead structure is not suitable or cannot be installed due to site restrictions, S5-1 with flashing beacons on each side of the road may be substituted for the overhead structure.

8. TRAFFIC CONTROL DEVICES FOR SIGNALIZED MIDBLOCK SCHOOL CROSSWALK

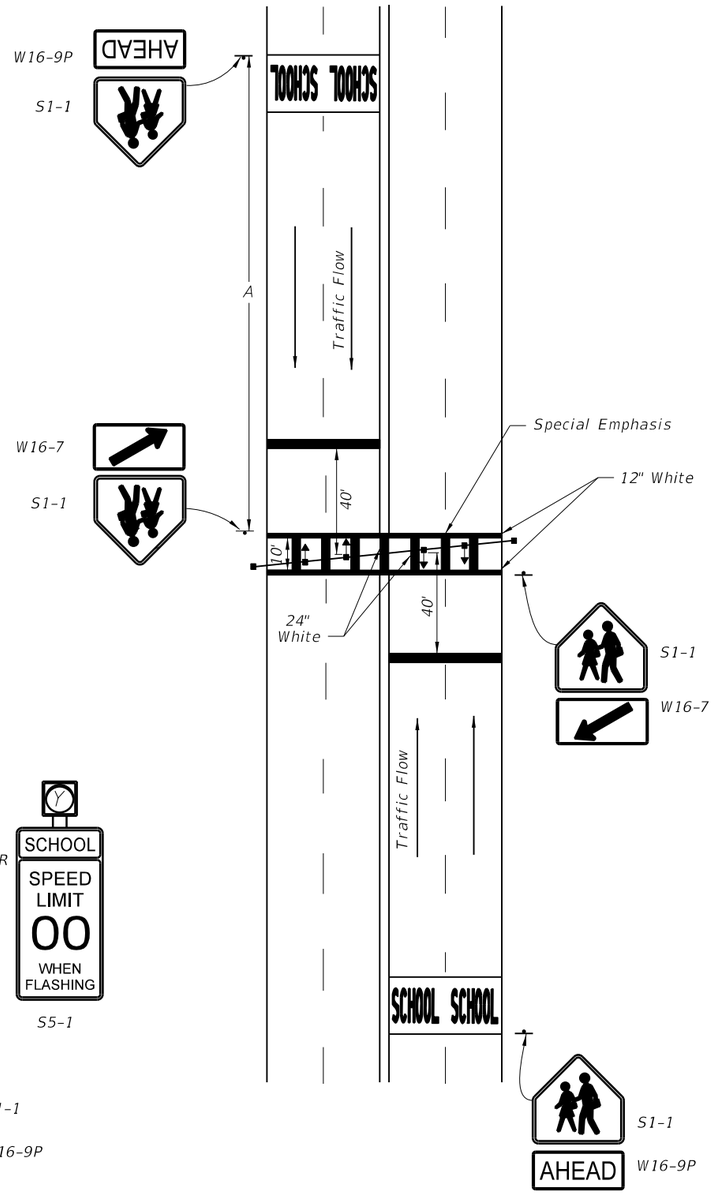

C:\d\projects\standards\roadway\17300-s\17344-03.dgn
rd960rh
2:16:27 PM
6/28/2012

LAST REVISION	REVISION	DESCRIPTION:				
01/01/12			FDOT DESIGN STANDARDS 2013	SCHOOL SIGNS & MARKINGS	INDEX NO. 17344	SHEET NO. 3

9. TRAFFIC CONTROL DEVICES AT SCHOOL ENTRANCES WITH LOW VOLUMES OF WALKING STUDENTS

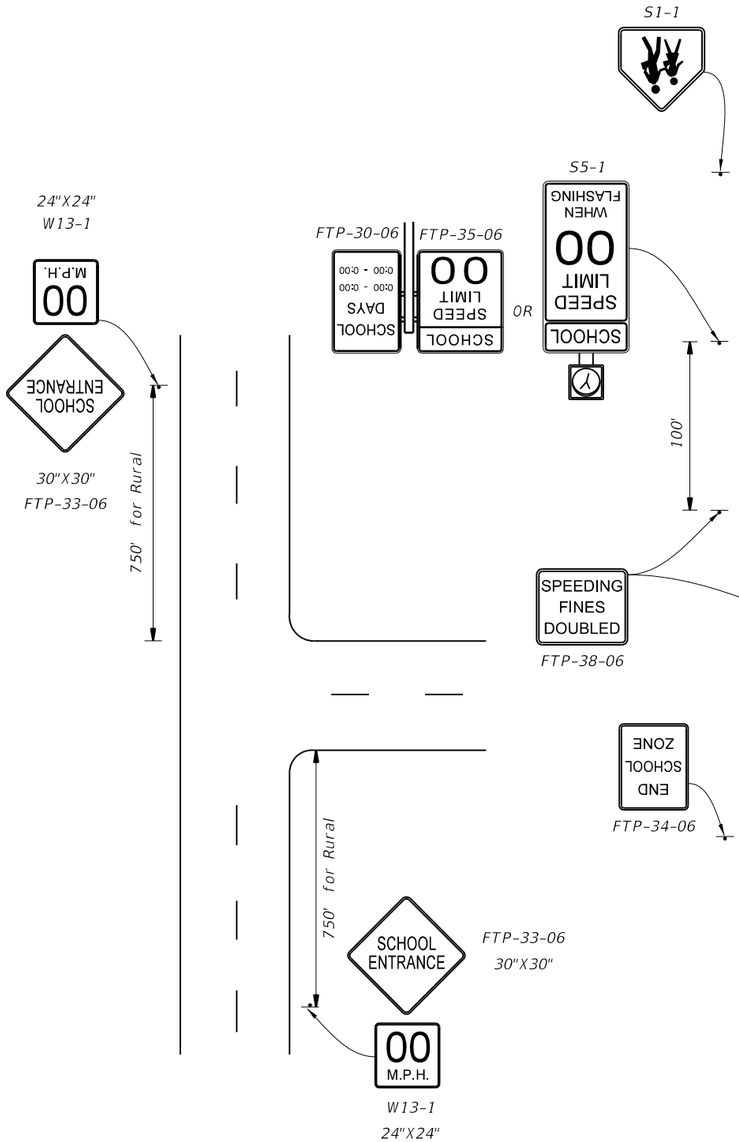

These signs are intended for use only at those few locations where the school entrance is not evident to the motorist, and must be approved in advance by the responsible traffic engineering authority.

10. TRAFFIC CONTROL DEVICES FOR A TYPICAL SCHOOL ZONE FRONTING THE SCHOOL PROPERTY

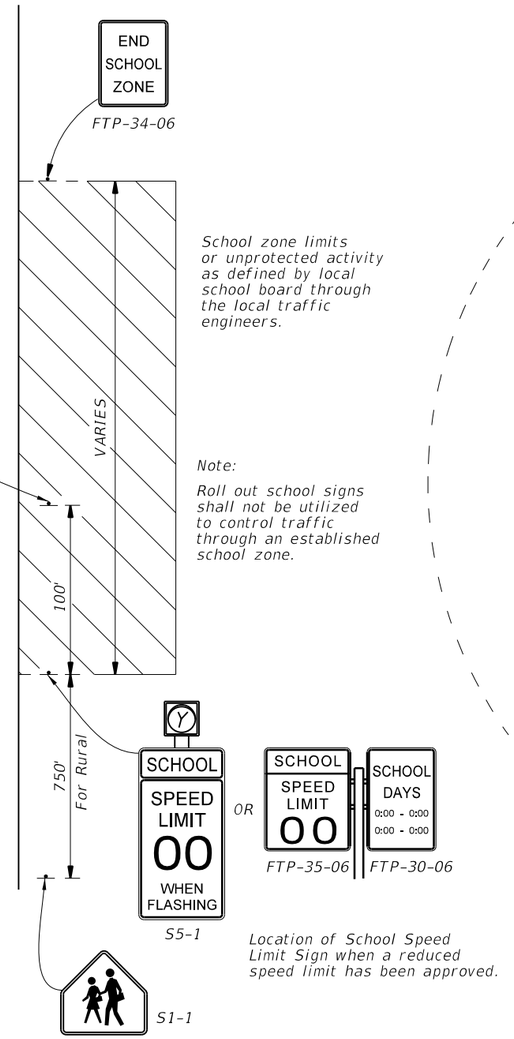

School zone limits or unprotected activity as defined by local school board through the local traffic engineers.

Note:

Roll out school signs shall not be utilized to control traffic through an established school zone.

Location of School Speed Limit Sign when a reduced speed limit has been approved.

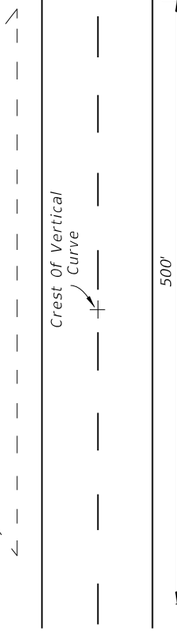

11. SCHOOL BUS STOP

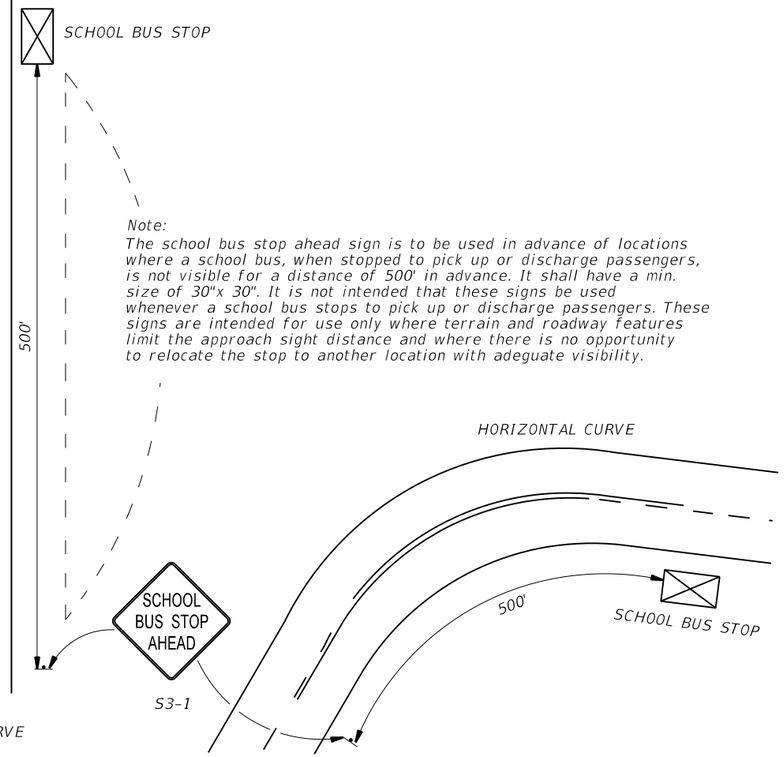

Note:

The school bus stop ahead sign is to be used in advance of locations where a school bus, when stopped to pick up or discharge passengers, is not visible for a distance of 500' in advance. It shall have a min. size of 30"x 30". It is not intended that these signs be used whenever a school bus stops to pick up or discharge passengers. These signs are intended for use only where terrain and roadway features limit the approach sight distance and where there is no opportunity to relocate the stop to another location with adequate visibility.

C:\d\projects\standards\roadway\17300-s\17344-04.dgn
rd960rh
2:16:29 PM
6/28/2012

LAST REVISION	REVISION	DESCRIPTION:			INDEX NO.	SHEET NO.
07/01/09			FDOT DESIGN STANDARDS 2013	SCHOOL SIGNS & MARKINGS	17344	4

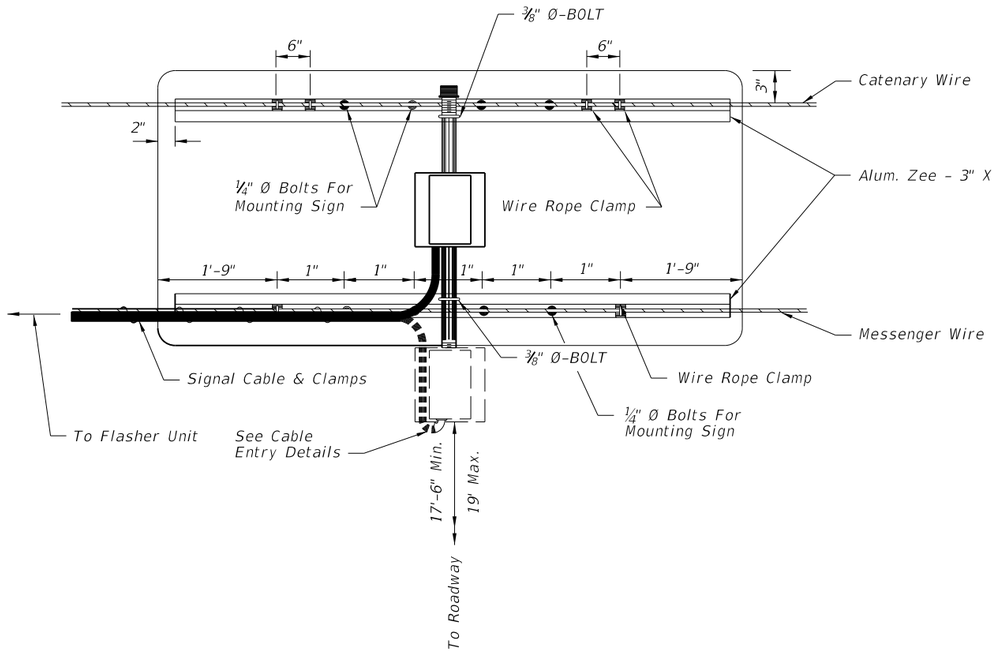

REAR VIEW

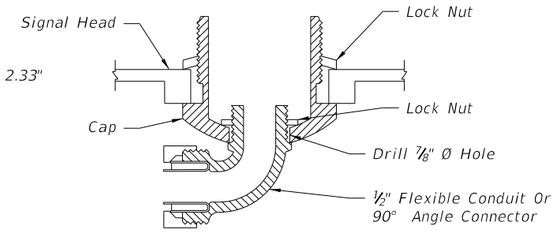

CABLE ENTRY DETAIL

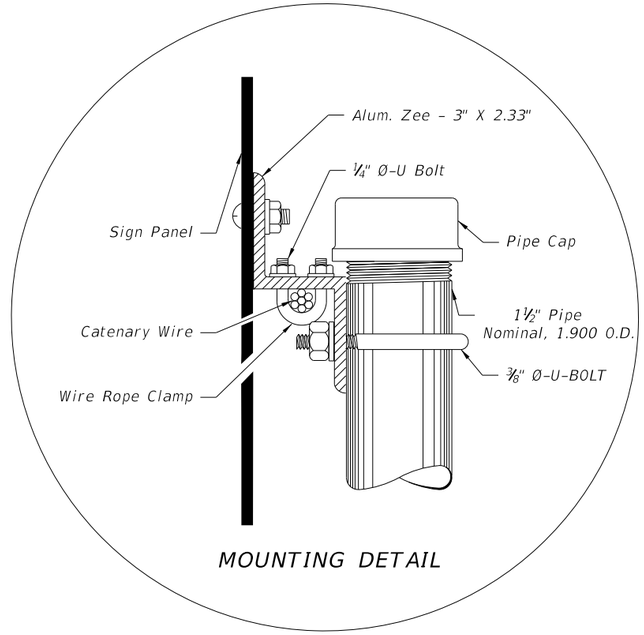

MOUNTING DETAIL

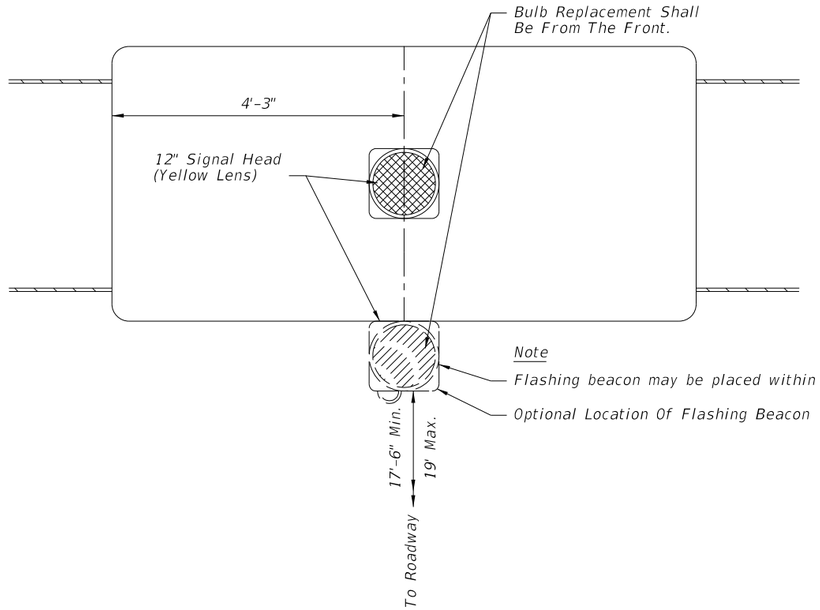

FRONT VIEW

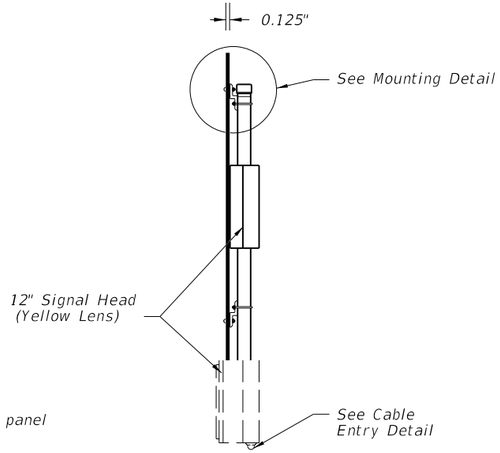

SIDE VIEW

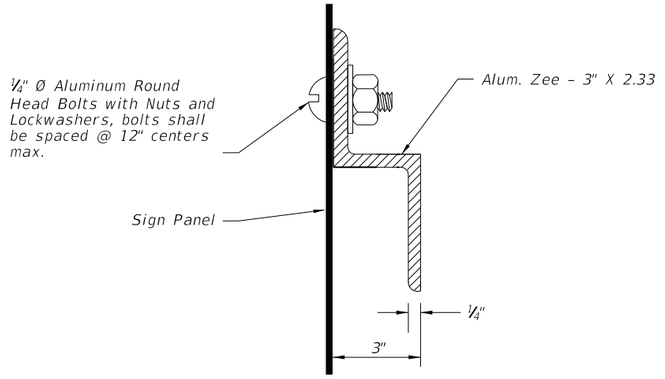

ZEE SECTION DETAIL

Flasher unit and cabinet to be placed on the strain pole supporting overhead sign assembly or on service pole. The flasher unit not to overhang private property or sidewalk.

C:\d\projects\standards\roadway\17300-s\17344-05.dgn
rd960rh
2:16:31 PM
6/28/2012

LAST REVISION	REVISION	DESCRIPTION:			INDEX NO.	SHEET NO.
01/01/12			FDOT DESIGN STANDARDS 2013	SCHOOL SIGNS & MARKINGS	17344	5

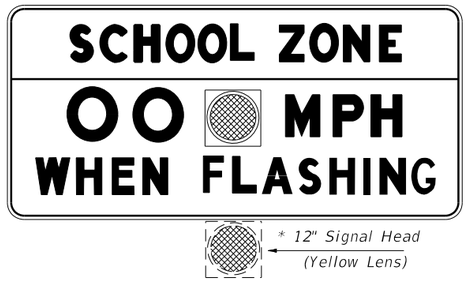

FTP-31-06

OVERHEAD STANDARD

* Flashing Beacon May Be Placed Within Or Below Panel

FTP-32-06

FTP-38-06

Notes:

1. Standard size signs should be used whenever possible. Minimum sizes may be used only on low volume, low speed (less than 35 mph) streets. Special sizes should be used on expressway facilities where special emphasis is needed.
2. The value of the actual school zone speed limit shall be determined by the District Traffic Operations Engineer in cooperation with local school superintendents. In no case shall it be less than the 15 mph min. as set by law.
3. See Index No. 17355 for sign details.
4. When fluorescent yellow-green background color is used, a systematic approach featuring one background color within a zone or area should be used. The mixing of standard yellow and fluorescent yellow green background within a zone should be avoided.

FTP-33-06

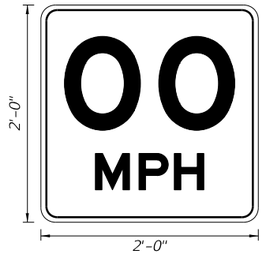

W13-1

SPEED LIMIT ASSEMBLY

S4-5

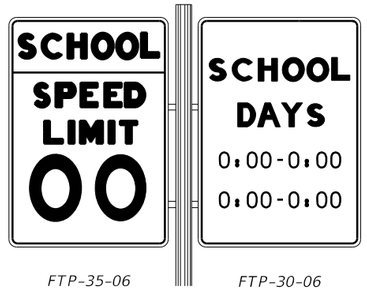

FTP-35-06 FTP-30-06

S1-1

S3-1

FTP-34-06

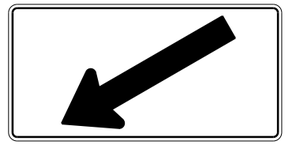

W16-7

W16-9P

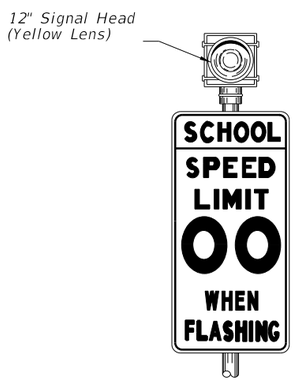

S5-1

Ground Mount Standard

Note:
Existing ground mount school speed limit signs utilizing a single 8" min. size beacon or two 6" min. size beacons inside the sign border are considered meeting the standard. However, replacement or upgrading of these school speed limit signs shall conform to the above standard. Numerical speed limit displayed shall be established by appropriate regulatory authorities.

C:\d\projects\standards\roadway\17300-s\17344-06.dgn rd960rh 2:16:33 PM 6/28/2012

LAST REVISION	REVISION	DESCRIPTION:			INDEX NO.	SHEET NO.
07/01/09			FDOT DESIGN STANDARDS 2013	SCHOOL SIGNS & MARKINGS	17344	6

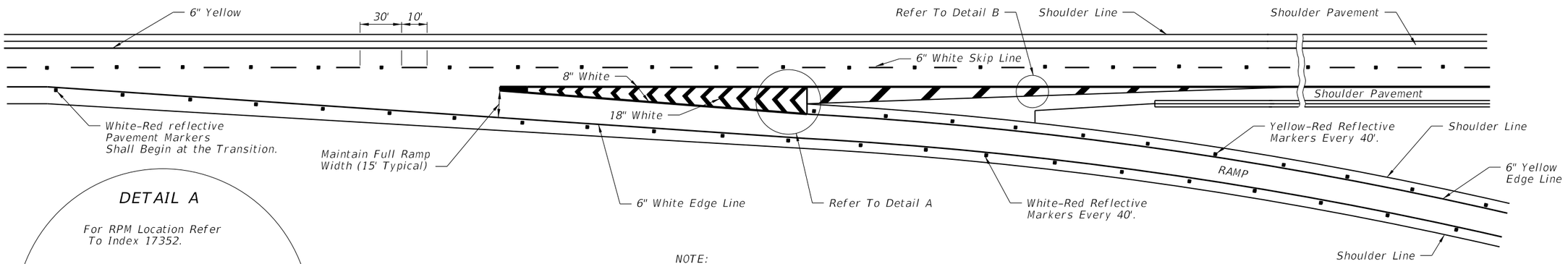

DETAIL A

For RPM Location Refer
To Index 17352.

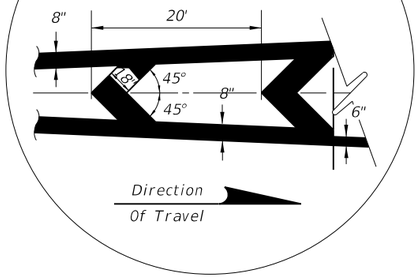

NOTE:
Reflective pavement markers
are installed adjacent to the
edge line.

NORMAL TAPERED EXIT

(TWO THRU LANES)

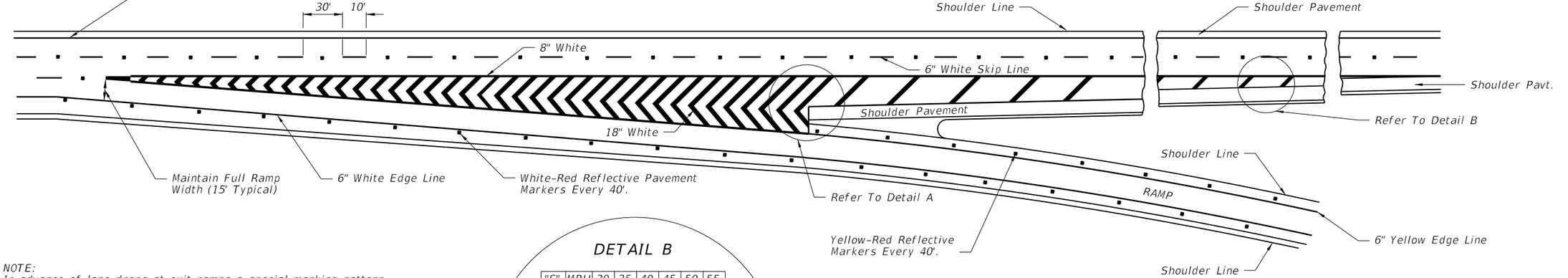

NOTE:
In advance of lane drops at exit ramps a special marking pattern may be used to distinguish the lane drop situation from a normal exiting ramp or auxiliary lane.
A typical special marking for lane drops consist of 8" wide by 3' long white stripes separated by 9' gaps. If used, this special marking should begin ½ mile in advance of the theoretical gore point. Where lane changes may cause conflicts, an 8" wide solid white channelizing line may be extended 300' upstream from the theoretical gore. (MUTCD Section 3B.05).

DETAIL B

"S"	MPH	30	35	40	45	50	55
"X"	Ft.	20	20	40	40	60	60

Passenger Car, Daytime, Posted Speeds
Or 85th Percentile (Use Higher Value)

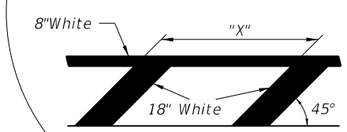

NORMAL TAPERED EXIT ONLY

(TWO THRU LANES – THREE APPROACH LANES)

C:\d\projects\standards\roadway\17300-s\17345-01.dgn
rd960rh
2:16:36 PM
6/28/2012

LAST REVISION	REVISION	DESCRIPTION:				
07/01/05			FDOT DESIGN STANDARDS 2013	INTERCHANGE MARKINGS	INDEX NO. 17345	SHEET NO. 1

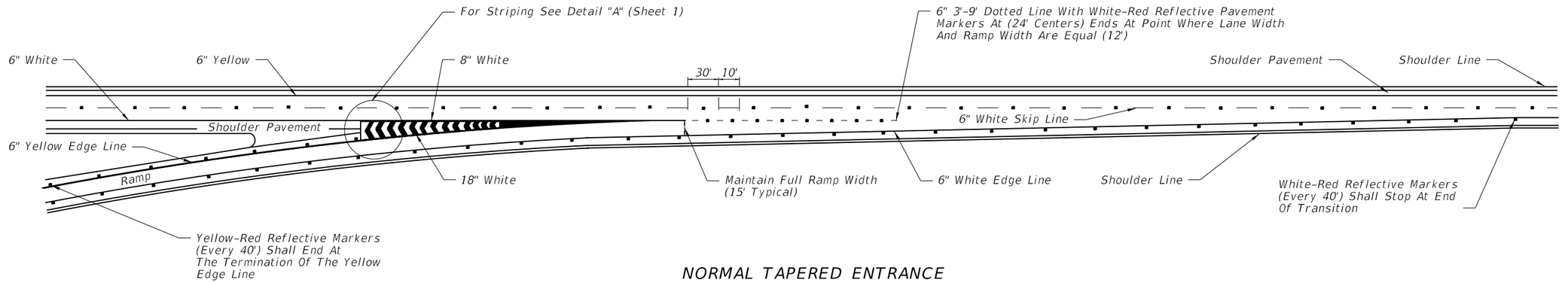

NORMAL TAPERED ENTRANCE

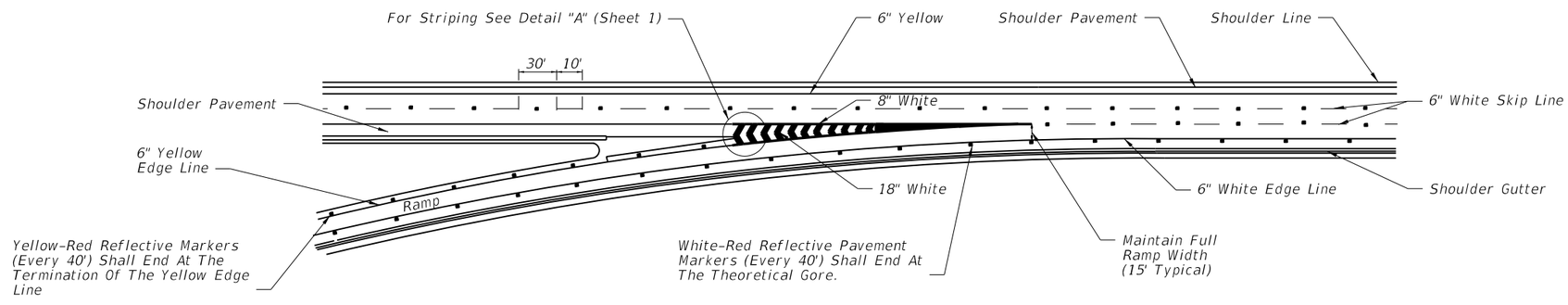

NORMAL TAPERED ENTRANCE
WITH ADDED LANE

C:\d\projects\standards\roadway\17300-s\17345-02.dgn
rd960rh
2:16:38 PM
6/28/2012

LAST REVISION	REVISION	DESCRIPTION:				
07/01/10			FDOT DESIGN STANDARDS 2013	INTERCHANGE MARKINGS	INDEX NO. 17345	SHEET NO. 2

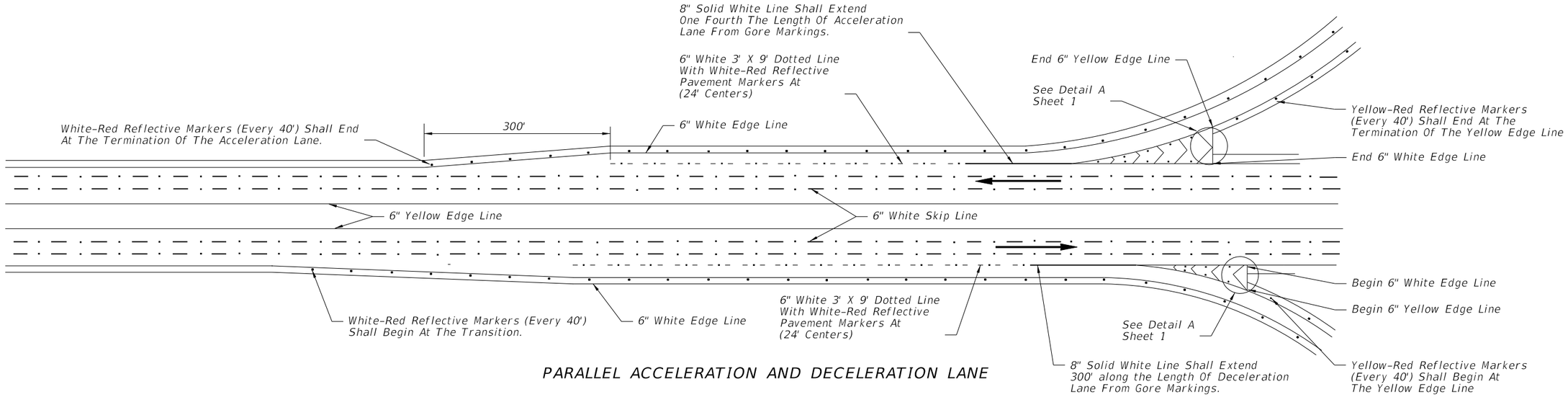

PARALLEL ACCELERATION AND DECELERATION LANE

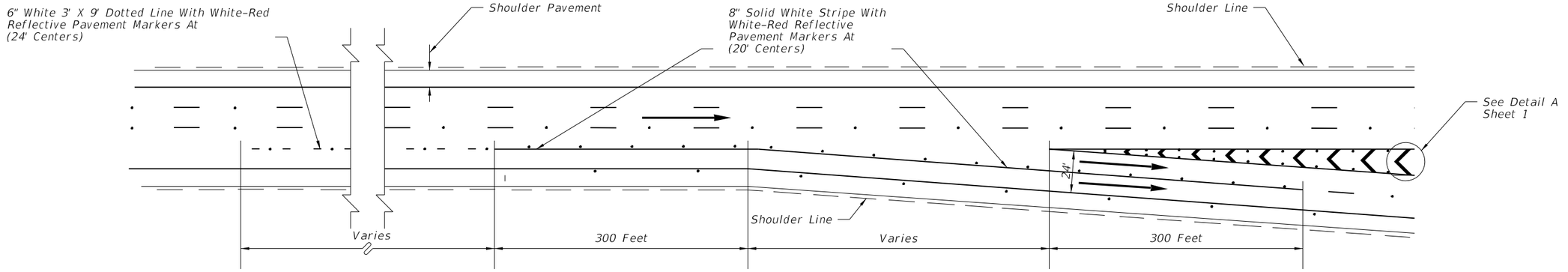

TYPICAL MARKINGS AT DUAL LANE EXITS

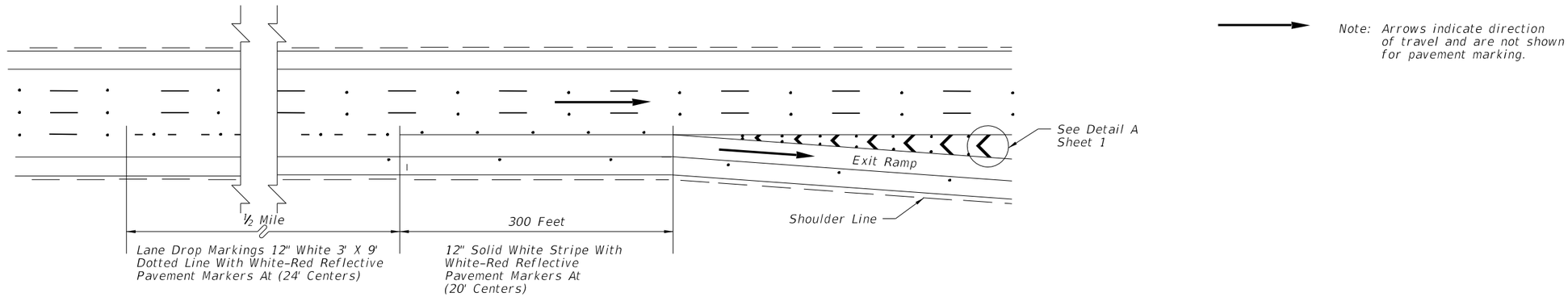

TYPICAL LANE DROP MARKINGS AT EXIT RAMPS

C:\d\projects\standards\roadway\17300-s\17345-03.dgn
rd960rh
2:16:40 PM
6/28/2012

LAST REVISION	REVISION	DESCRIPTION:				
07/01/10			FDOT DESIGN STANDARDS 2013	INTERCHANGE MARKINGS	INDEX NO. 17345	SHEET NO. 3

Notes:

1. Post delineators spaced at 40' on curves of the entrance and exit of ramps. The spacing on the tangent portion of the ramp section shall be 300'. All delineators are to be setback 4' from shoulder break. Post delineators should not be discontinued in sections with guardrail.

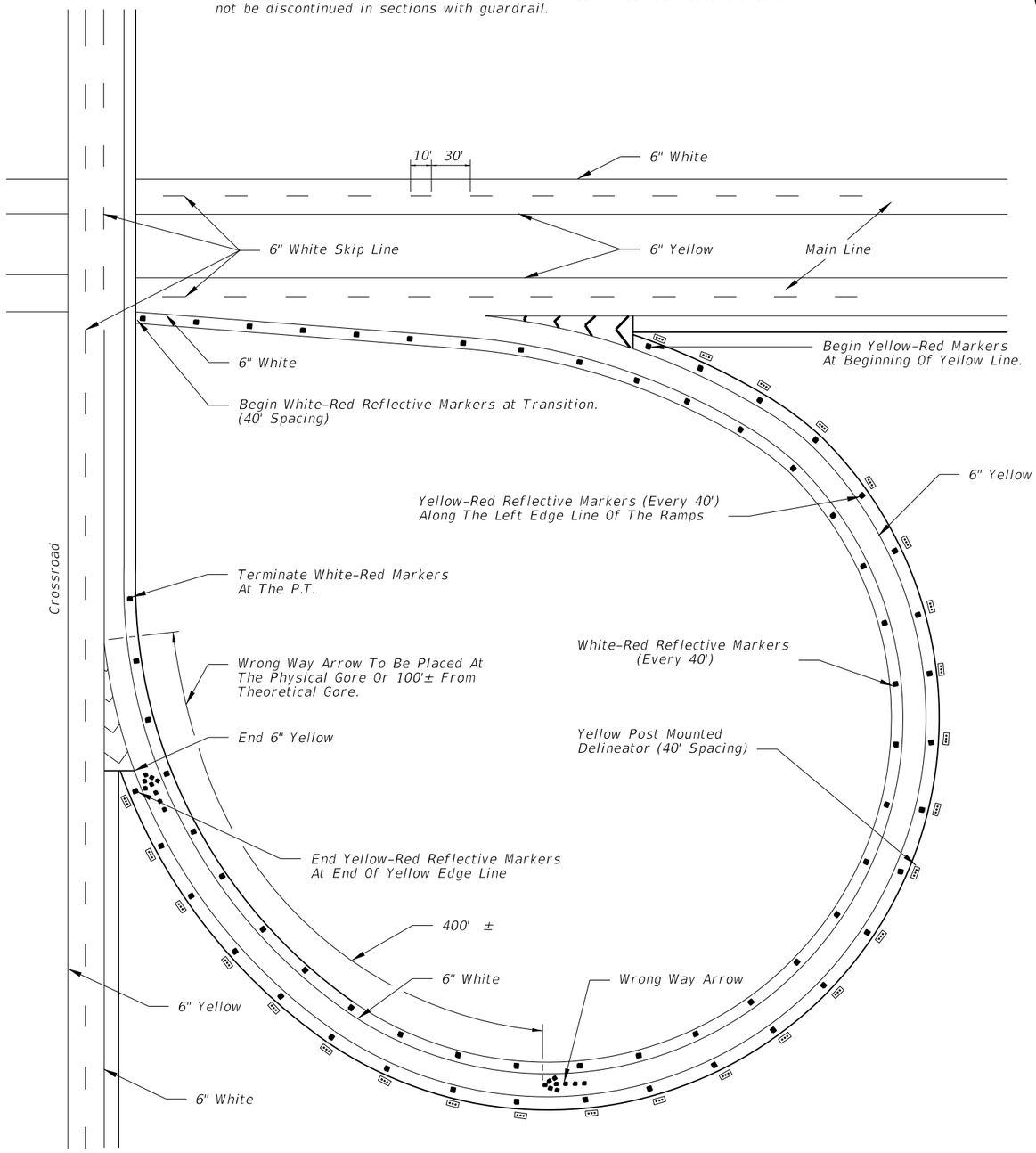

White Arrow With White-Red Reflective Markers

WRONG WAY ARROW

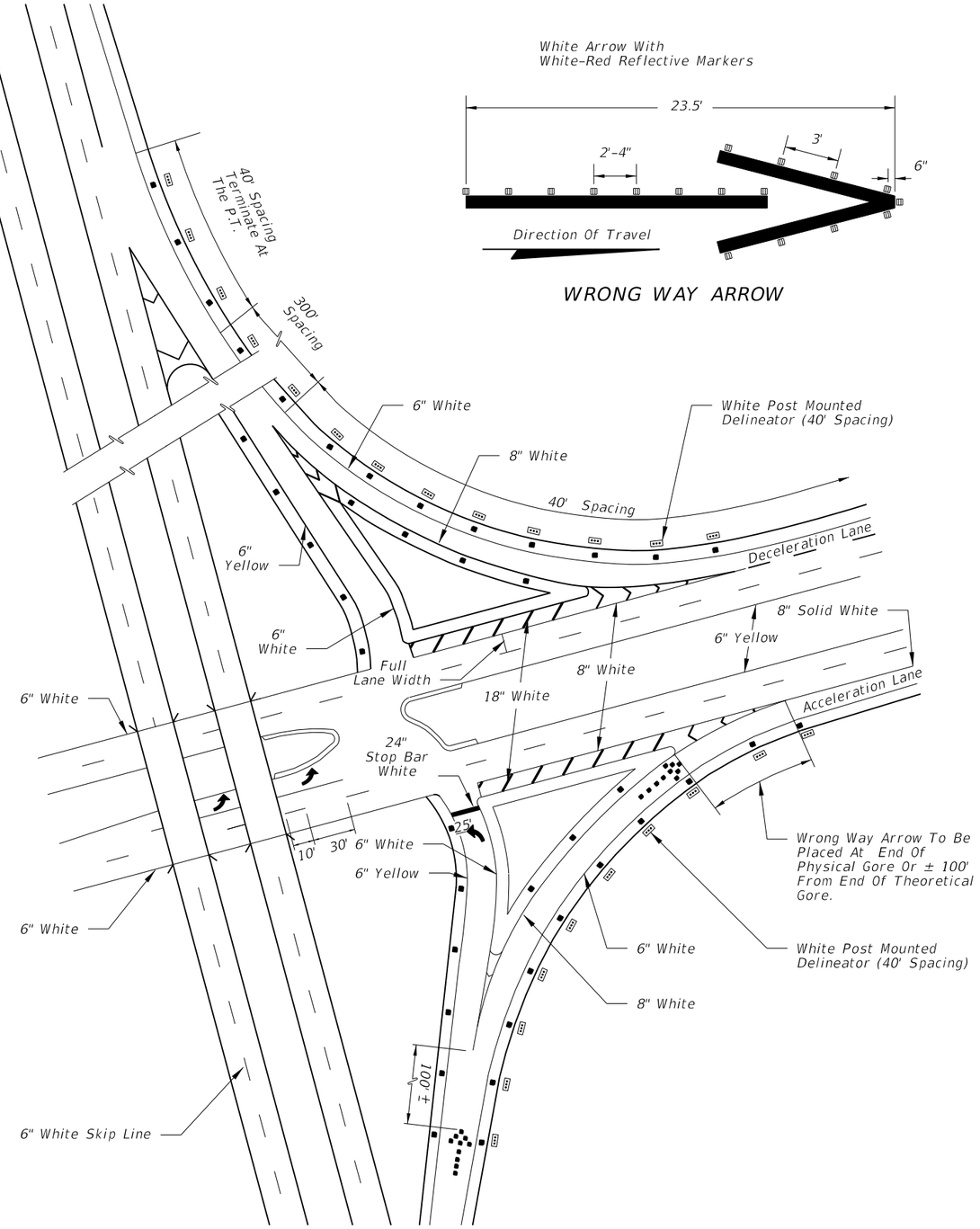

C:\d\projects\standards\roadway\17300-s\17345-04.dgn
rd960rh
2:16:42 PM
6/28/2012

LAST REVISION	REVISION	DESCRIPTION:			INDEX NO.	SHEET NO.
01/01/12			FDOT DESIGN STANDARDS 2013	INTERCHANGE MARKINGS	17345	4

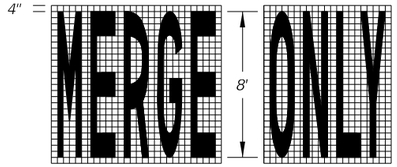

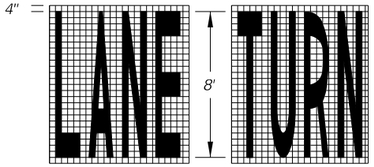

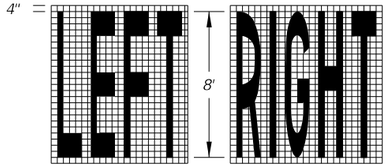

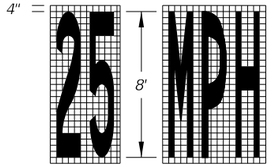

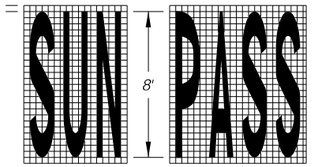

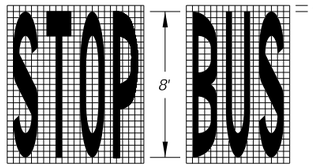

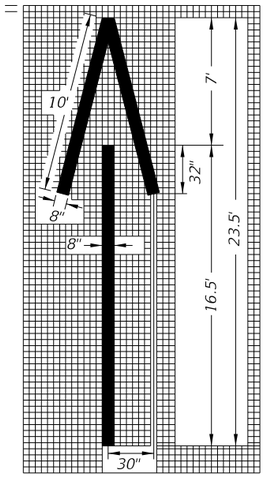

Wrong-Way Arrow

24 s.f.

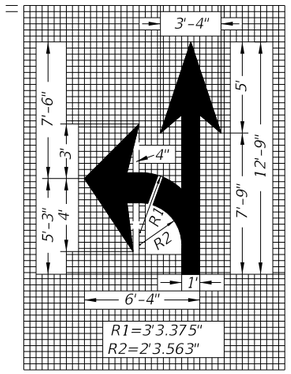

Turn and Through Lane-Use Arrow

29 s.f.

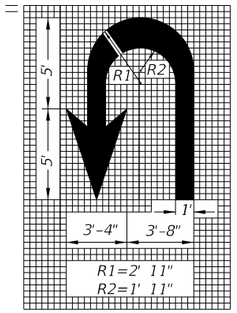

U Turn Lane-Use Arrow

27 s.f.

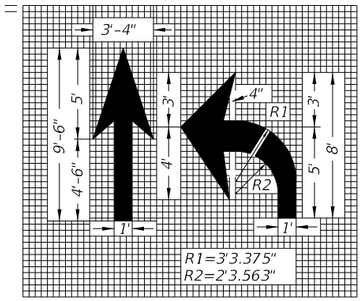

Through Lane-Use Arrow

12 s.f.

Turn Lane-Use Arrow

17 s.f.

Right Turn Arrow To Be Reversed.

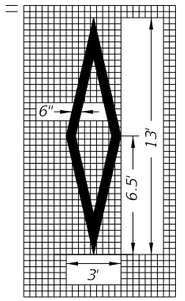

Preferential Lane Symbol

11 s.f.

DIMENSIONS ARE WITHIN 1" ±

PAVEMENT ARROW AND MESSAGE DETAILS

NOTE: When arrow and pavement message are used together, the arrow shall be located down stream of the pavement message and shall be separated from the pavement message by a distance of 25' (Base of the arrow to the base of the message). Stop message shall be placed 25' from back of stop line.

TYPES OF PERMANENT LONGITUDINAL LINES

BASIC COLOR RULE:

White lines separate traffic in the same direction. Yellow lines separate traffic in opposing directions. Yellow dotted lines may be used in special cases. Black may be used in combination with white for skip lines where a light-colored pavement does not provide sufficient contrast with the markings.

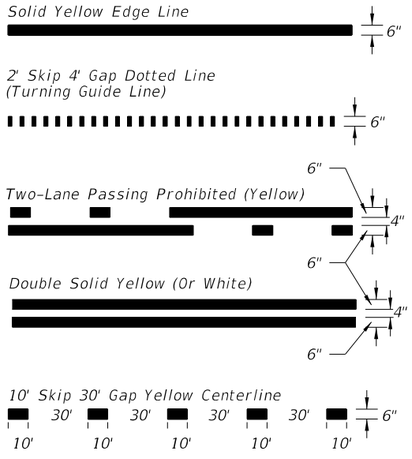

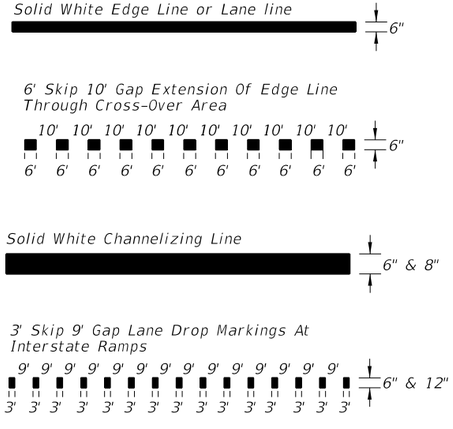

CONTRAST MARKINGS

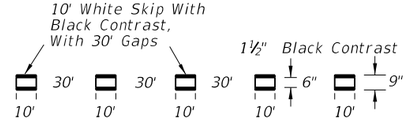

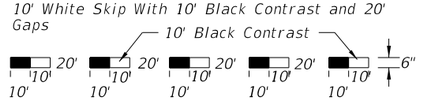

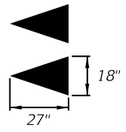

Yield Lines 5-18" X 27" White triangles facing traffic equally spaced within travel lane with 1 additional triangle using same spacing when a bike lane is present.

C:\d\projects\standards\roadway\17300-s\17346-01.dgn rd960rh 2:16:44 PM 6/28/2012

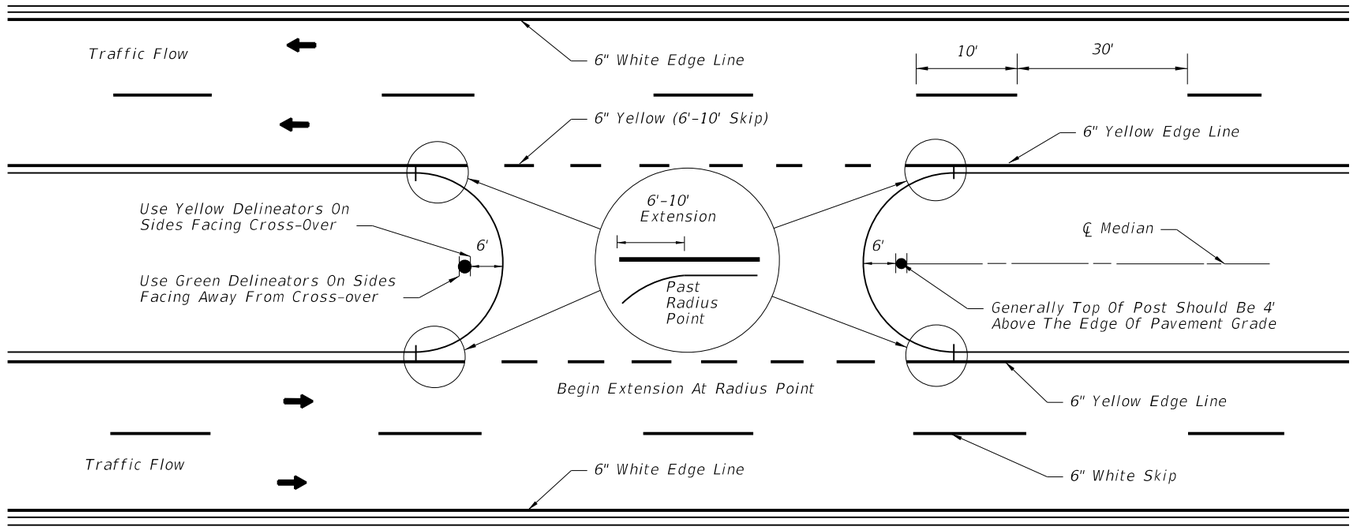

PAVEMENT MARKINGS AND DELINEATORS FOR MEDIAN CROSS-OVER

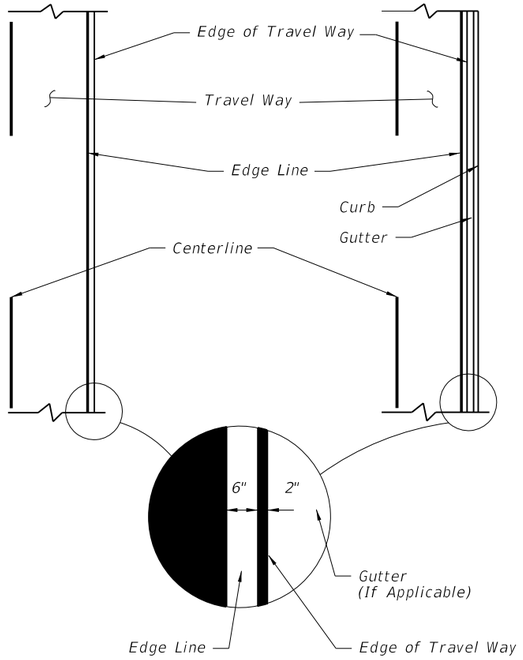

PLACEMENT OF EDGE LINES

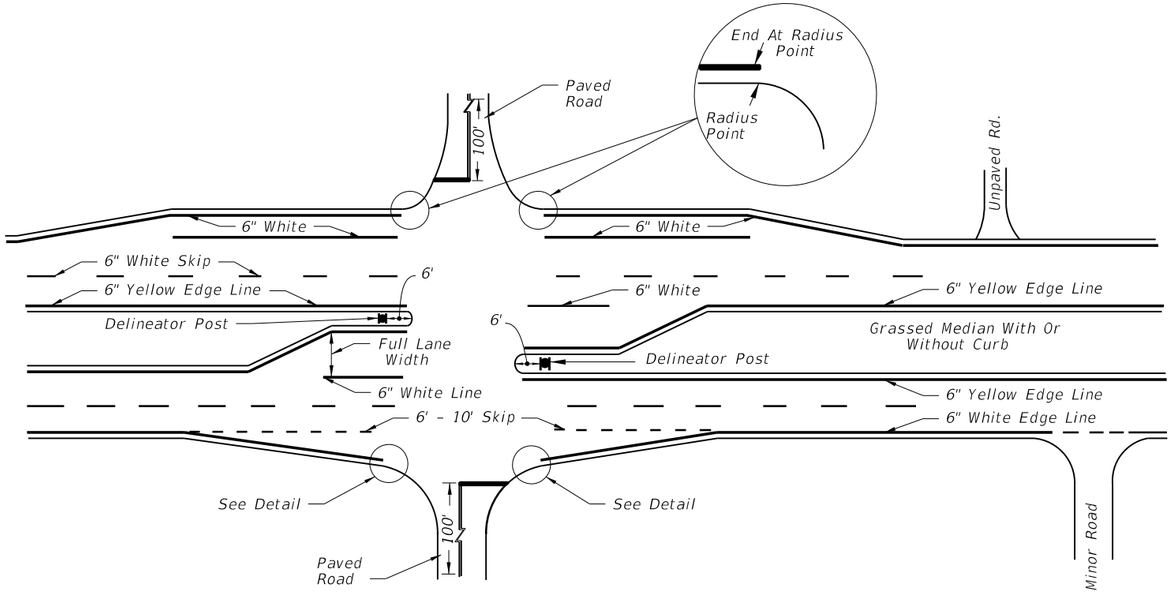

PAVEMENT MARKINGS FOR INTERSECTIONS WITH MAJOR AND MINOR ROADS

NOTE:

Markings applied to median noses shall be yellow in color.

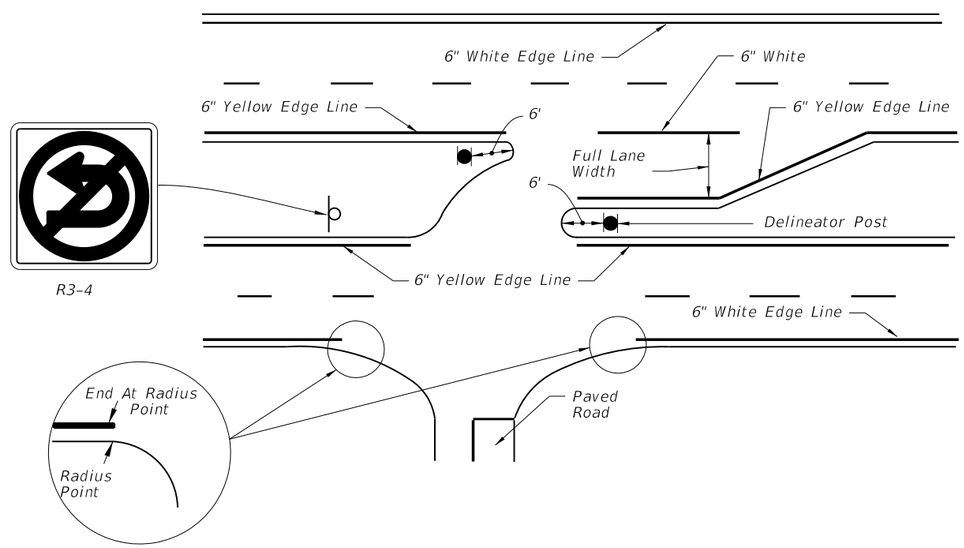

C:\d\projects\standards\roadway\17300-s\17346-02.dgn rd960rh 2:16:46 PM 6/28/2012

LAST REVISION	REVISION	DESCRIPTION:			INDEX NO.	SHEET NO.
01/01/10			FDOT DESIGN STANDARDS 2013	SPECIAL MARKING AREAS	17346	2

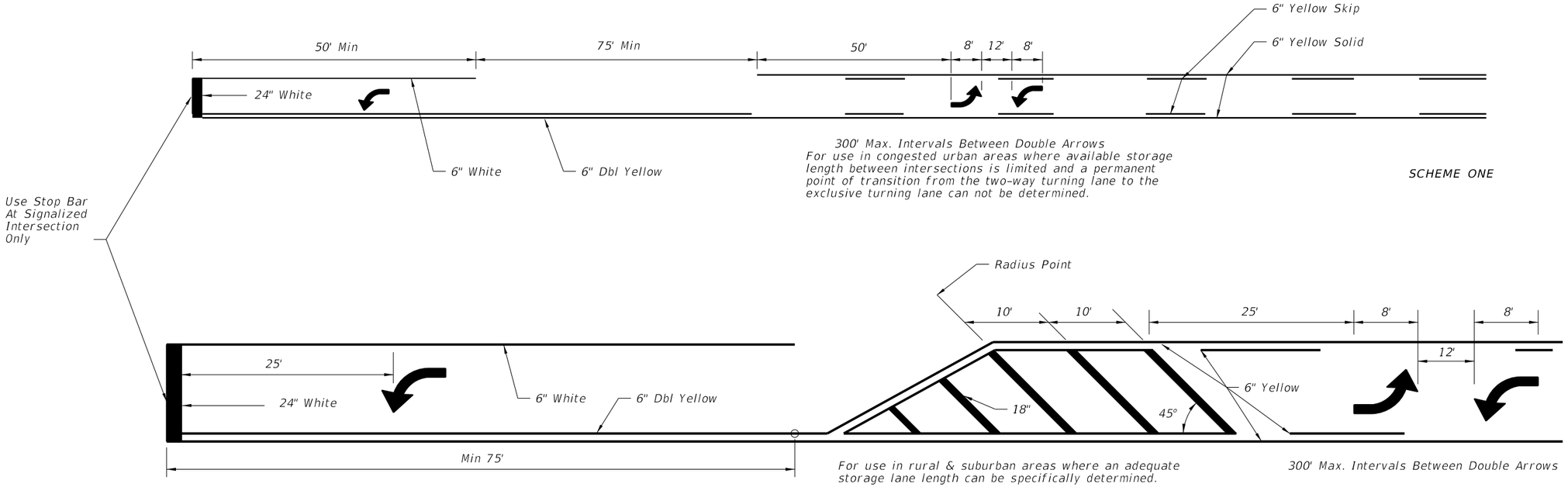

(WITH SINGLE LANE LEFT TURN CHANNELIZATION)

TWO WAY LEFT TURN LANE

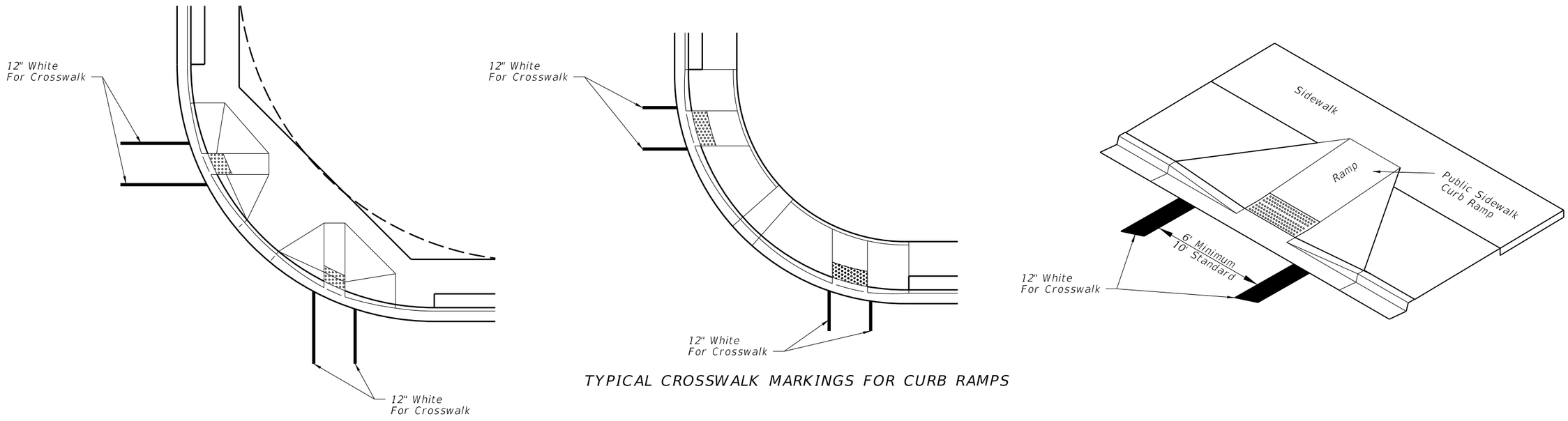

TYPICAL CROSSWALK MARKINGS FOR CURB RAMPS

C:\d\projects\standards\roadway\17300-s\17346-03.dgn rd960rh 2:16:48 PM 6/28/2012

LAST REVISION	REVISION	DESCRIPTION:				
07/01/09			FDOT DESIGN STANDARDS 2013	SPECIAL MARKING AREAS	INDEX NO. 17346	SHEET NO. 3

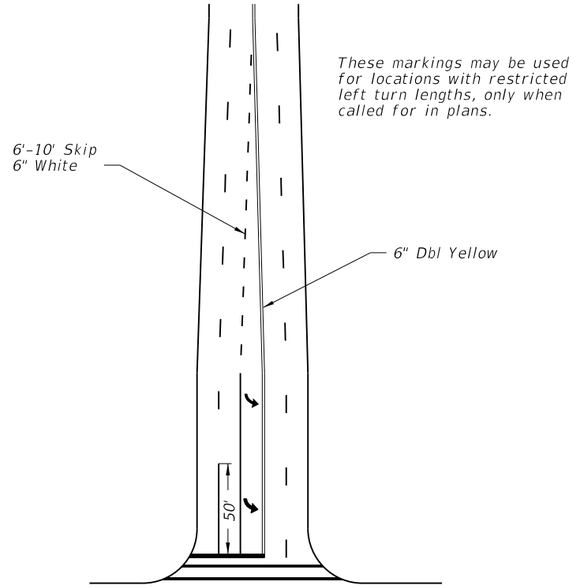

RESTRICTED LEFT TURN MARKING

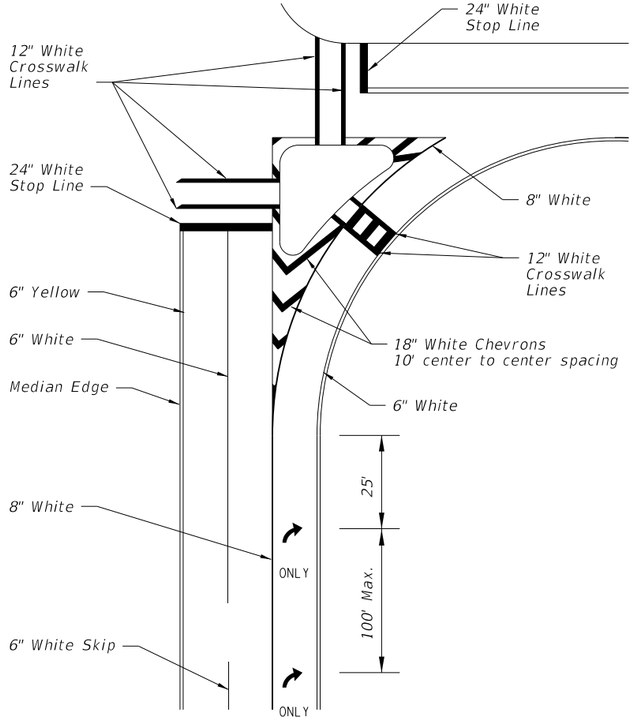

RIGHT TURN LANE DROP AND ISLAND DETAILS
LEFT TURN LANE DROP IS MIRROR IMAGE

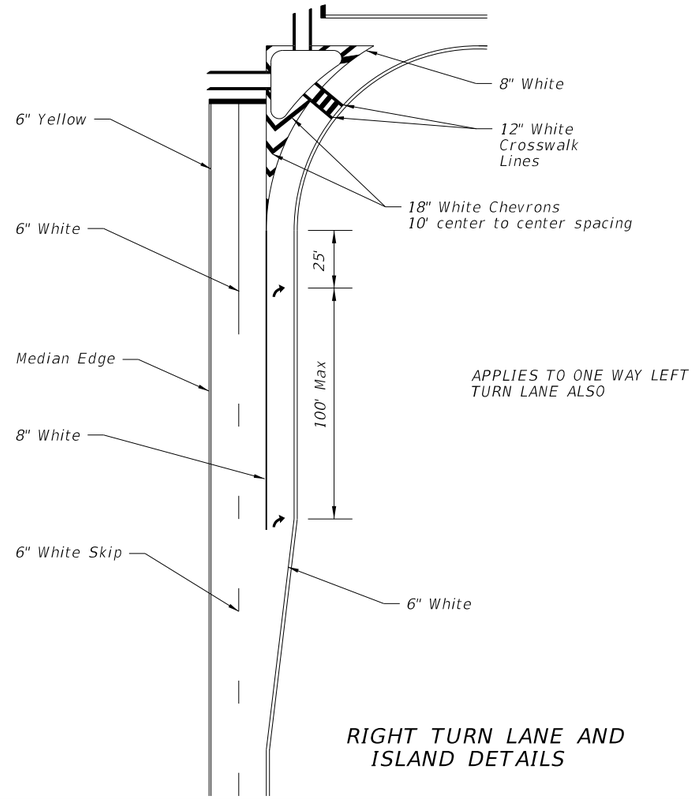

RIGHT TURN LANE AND ISLAND DETAILS

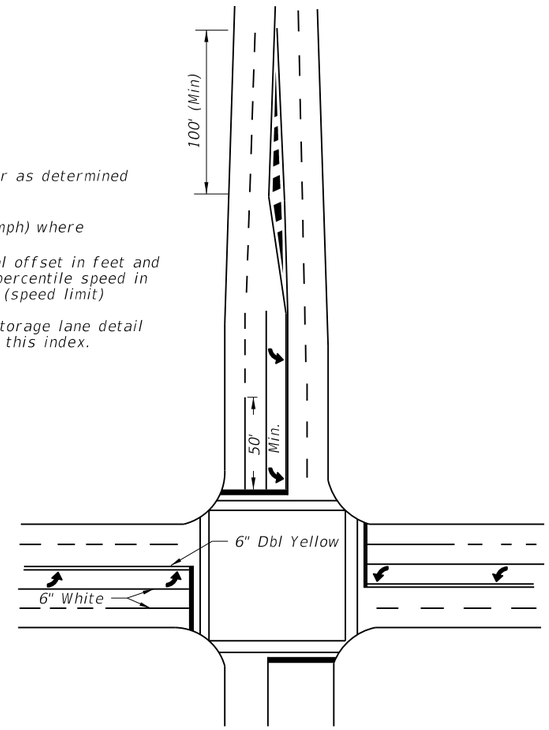

TYPICAL INTERSECTION 2 THRU LANES
PLUS LEFT TURN LANE, WITH CROSSWALK

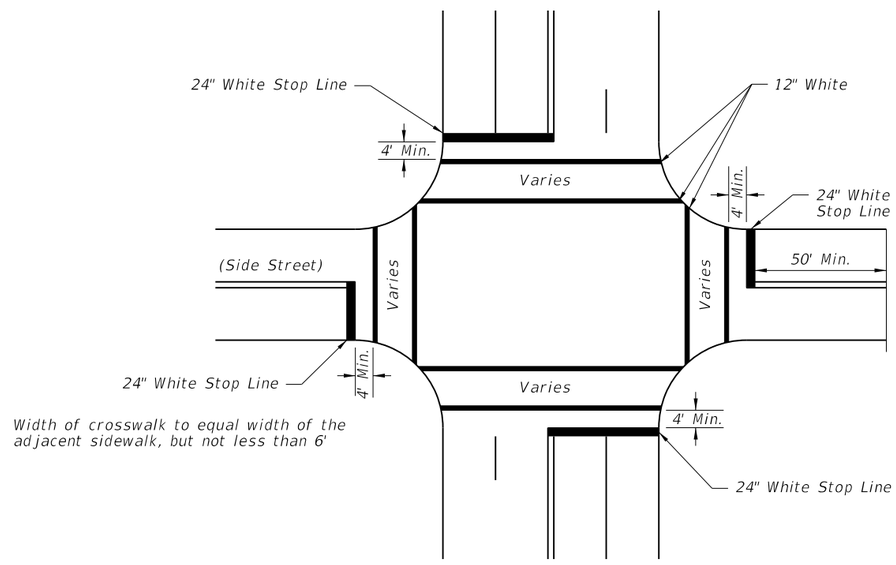

NOTES:

1. When public sidewalk curb ramps are present, refer Index No. 17344 and Index No. 304 for crosswalk widths.
2. Double yellow longitudinal center lines on all roadway approaches shall be extended back 100' for projects involving intersection improvements only.
3. When specified, "stop" message shall be placed 25' back of stop lines.

STOP BARS, CROSSWALKS AND DOUBLE CENTER LINE DETAILS

C:\d\projects\standards\roadway\17300-s\17346-04.dgn rd960rh 2:16:50 PM 6/28/2012

LAST REVISION	REVISION	DESCRIPTION:				
07/01/09			FDOT DESIGN STANDARDS 2013	SPECIAL MARKING AREAS	INDEX NO. 17346	SHEET NO. 4

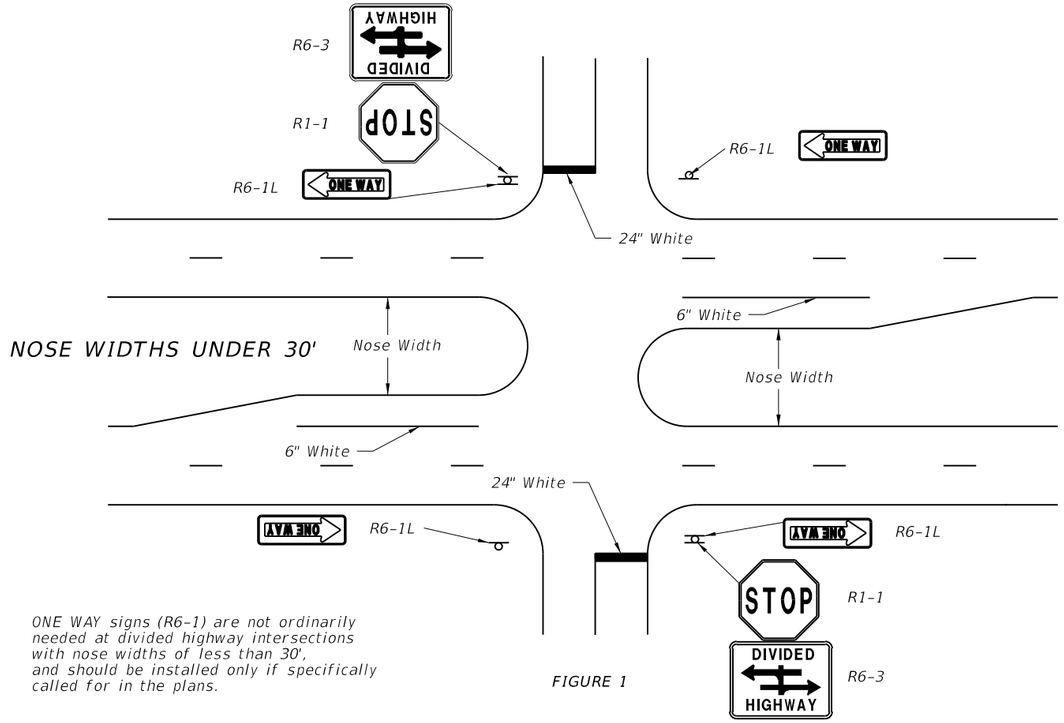

ONE WAY signs (R6-1) are not ordinarily needed at divided highway intersections with nose widths of less than 30', and should be installed only if specifically called for in the plans.

FIGURE 1

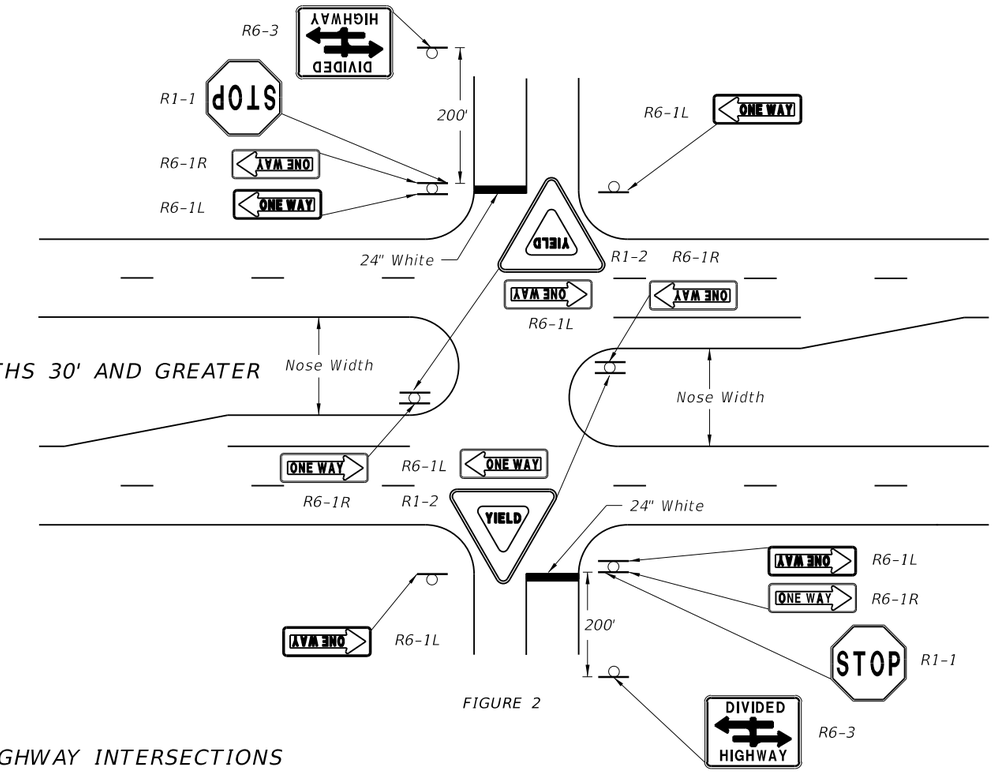

FIGURE 2

ONE-WAY SIGNS 0N DIVIDED HIGHWAY INTERSECTIONS

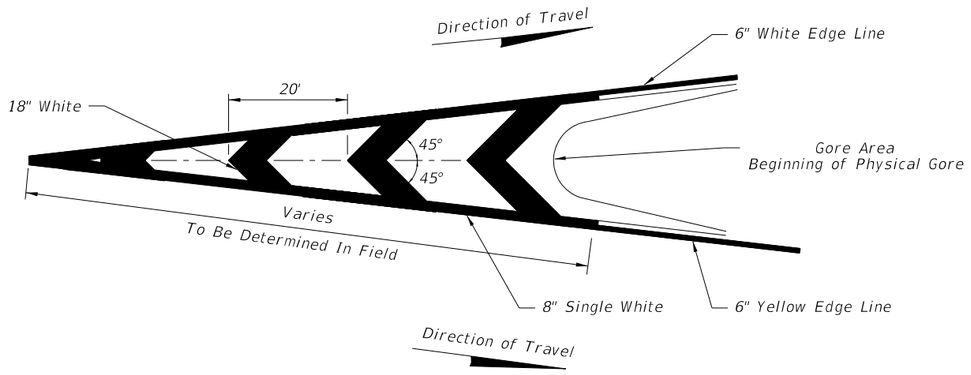

PAVEMENT MARKINGS FOR TRAFFIC CHANNELIZATION AT GORE

(TRAFFIC FLOWS IN SAME DIRECTION)

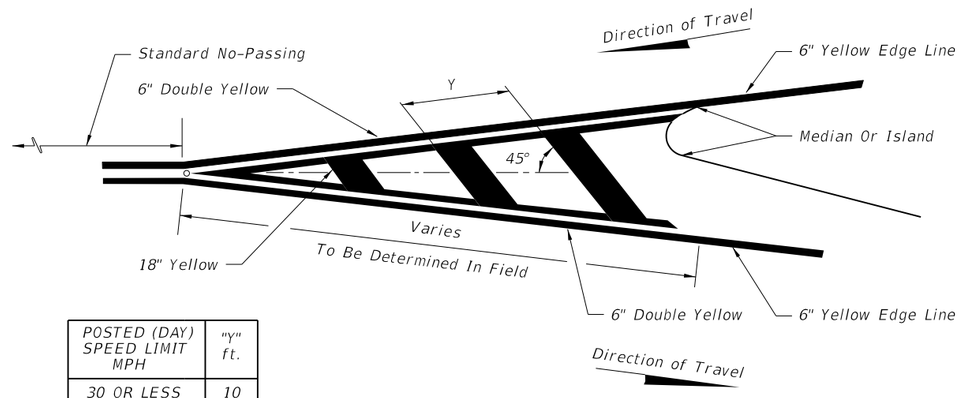

POSTED (DAY) SPEED LIMIT MPH	"Y" ft.
30 OR LESS	10
35	20
40	20
45	30
50 OR MORE	40

PAVEMENT MARKING FOR TRAFFIC SEPARATION

(TRAFFIC FLOWS IN OPPOSING DIRECTIONS)

C:\d*projects\standards\roadway\17300-s\17346-05.dgn rd960rh 2:16:52 PM 6/28/2012

TYPICAL TRANSITION MARKING
COLOR SHALL BE THE SAME AS RESPECTIVE EDGE LINE

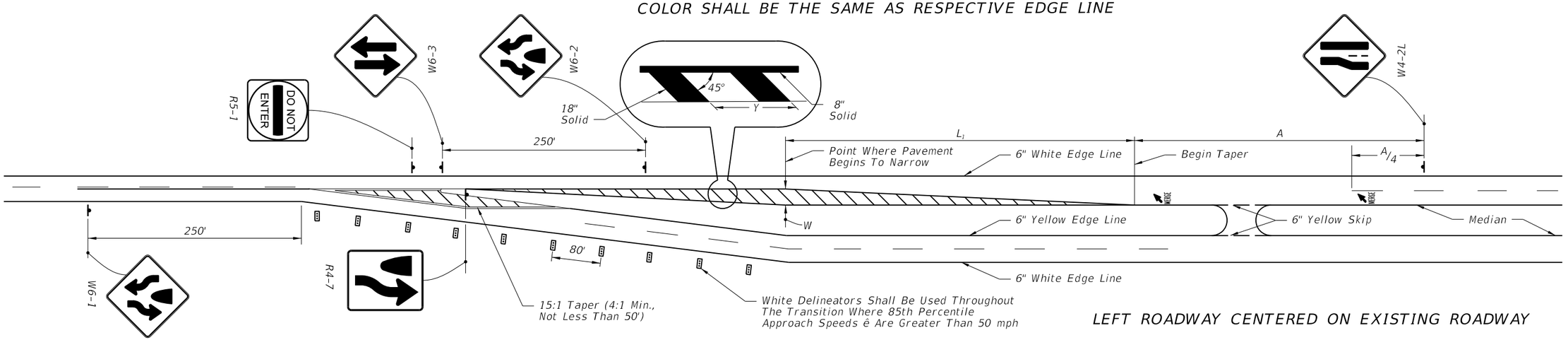

LEFT ROADWAY CENTERED ON EXISTING ROADWAY

*S \ **W	TRANSITION DISTANCE L_1 (FEET)						
MPH	8	9	10	11	12	13	14
30	120	135	150	165	180	195	210
35	165	185	205	225	245	265	285
40	215	240	270	295	320	350	375
45	360	405	450	495	540	585	630
50	400	450	500	550	600	650	700
55	440	495	550	605	660	715	770
60	480	540	600	660	720	780	840
65	520	585	650	715	780	845	910

SPEED* MPH	"A" (FT.)
55	950
50	850
45	750
40	650
30	450

POSTED (DAY) SPEED LIMIT MPH	"Y" (FT.)
30 OR LESS	10
35	20
40	20
45	30
50 OR MORE	40

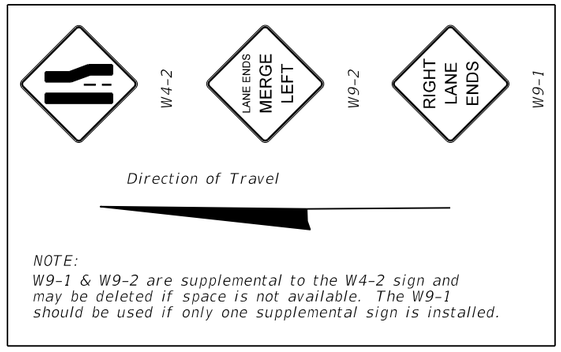

NOTE:
W9-1 & W9-2 are supplemental to the W4-2 sign and may be deleted if space is not available. The W9-1 should be used if only one supplemental sign is installed.

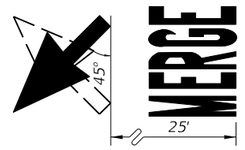

PAVEMENT MARKING DETAIL

L_1=WS (45 MPH or Greater)

$L_1 = \frac{WS^2}{60}$ (≤40 MPH)

*Design Speed

**Lateral offset

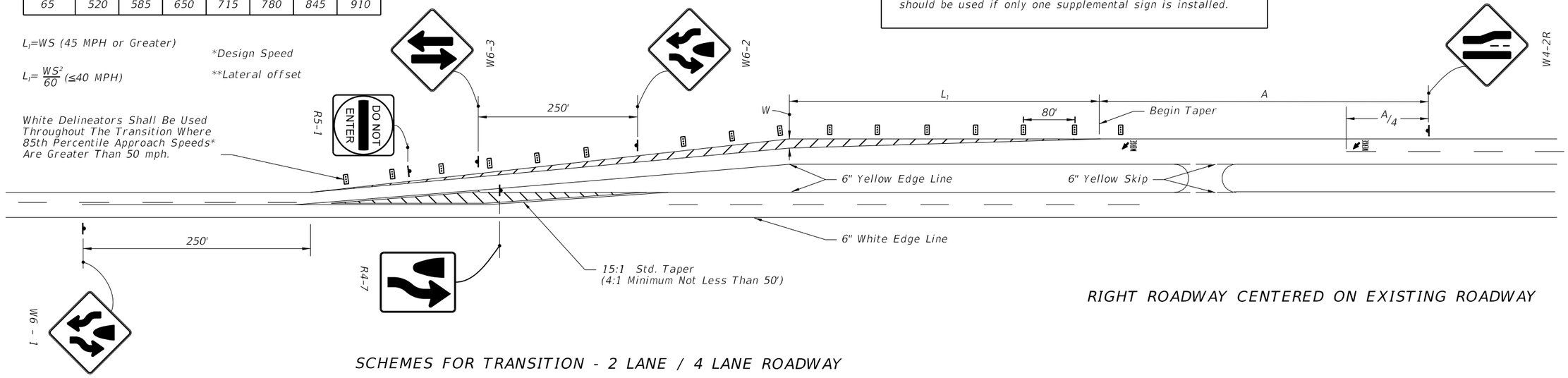

RIGHT ROADWAY CENTERED ON EXISTING ROADWAY

SCHEMES FOR TRANSITION - 2 LANE / 4 LANE ROADWAY

C:\d\projects\standards\roadway\17300-s\17346-06.dgn rd960rh 2:16:54 PM 6/28/2012

LAST REVISION	REVISION	DESCRIPTION:		FDOT DESIGN STANDARDS 2013	SPECIAL MARKING AREAS	INDEX NO.	SHEET NO.
07/01/09						17346	6

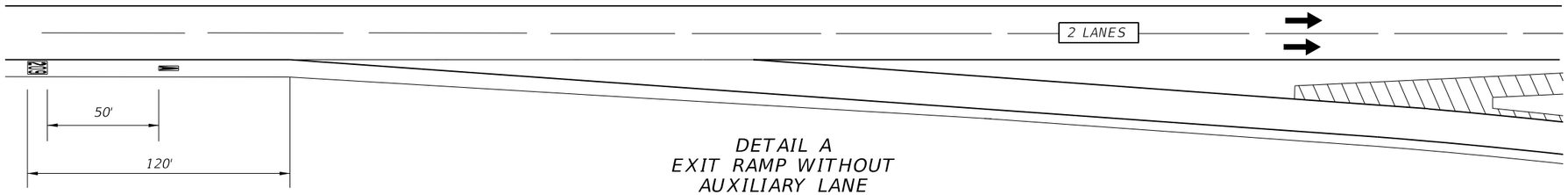

DETAIL A
EXIT RAMP WITHOUT
AUXILIARY LANE

LAYOUT FOR 1, 2 AND 3 DIGIT NUMBERS AND LETTERS

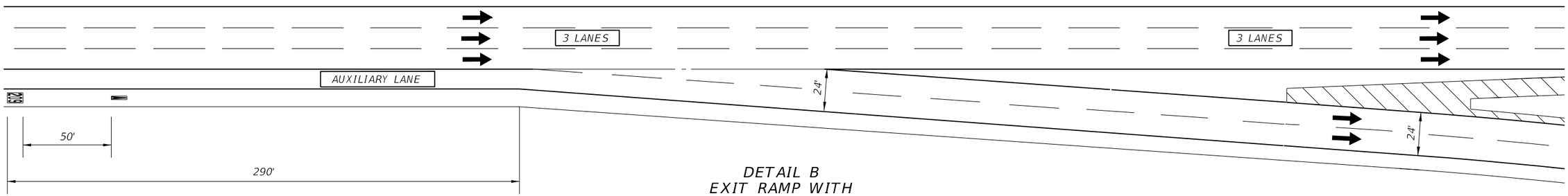

DETAIL B
EXIT RAMP WITH
AUXILIARY LANE

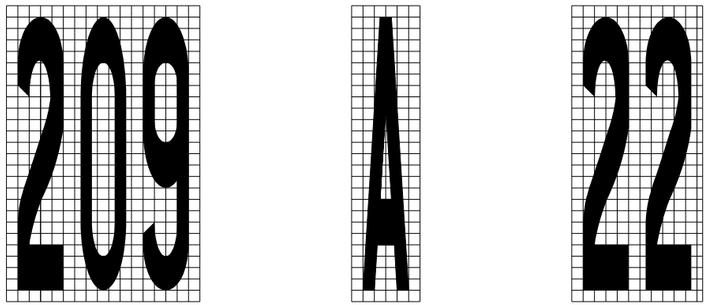

MESSAGE SIZE AND SPACING
4" X 4" squares

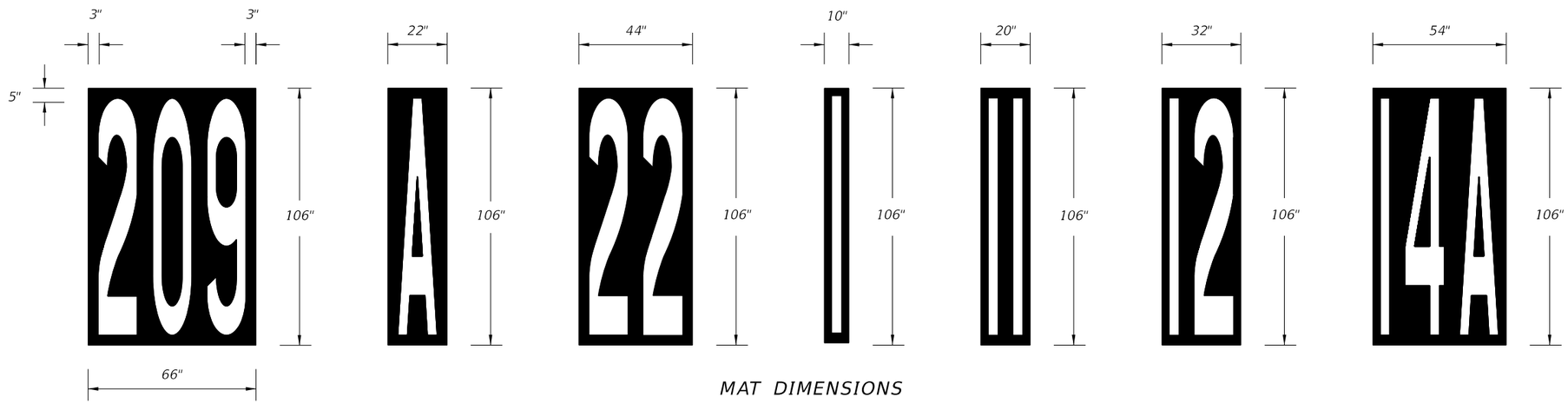

MAT DIMENSIONS

NOTES:

1. Messages shall meet requirements of Specification Section 971-6 and Section 711.
2. The thickness of the preformed message shall be 125 mils.
3. The message shall consist of white letters and numbers with black contrasting material. The black material shall meet the mat dimensions shown and have a minimum skid resistance value of 55 BPN.
4. The "EXIT NUMBER" position remains the same distance from the beginning of taper regardless of the number of lines of information.

C:\d\projects\standards\roadway\17300-s\17346-07.dgn
rd960rh
2:16:56 PM
6/28/2012

LAST REVISION	REVISION	DESCRIPTION:			INDEX NO.	SHEET NO.
07/01/10			FDOT DESIGN STANDARDS 2013	SPECIAL MARKING AREAS	17346	7

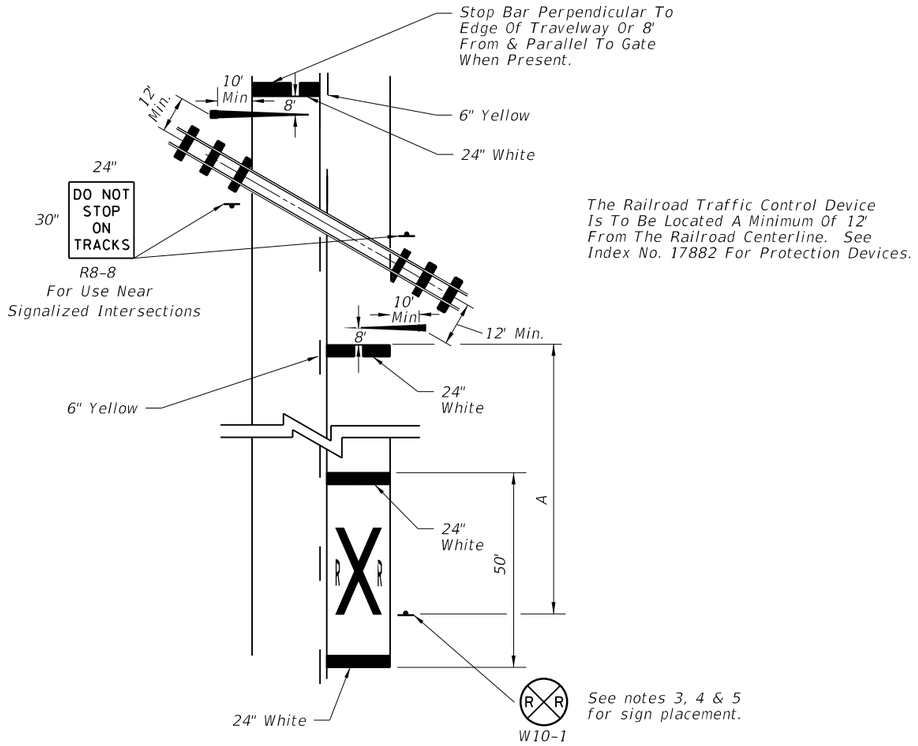

RAILROAD CROSSING AT 2-LANE ROADWAY

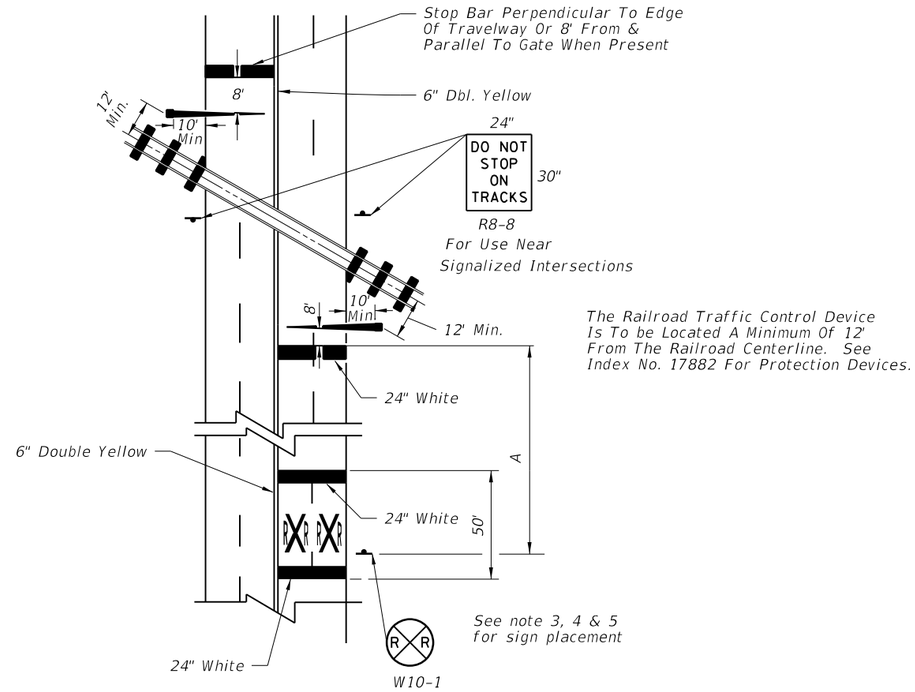

RAILROAD CROSSING AT 4-LANE ROADWAY

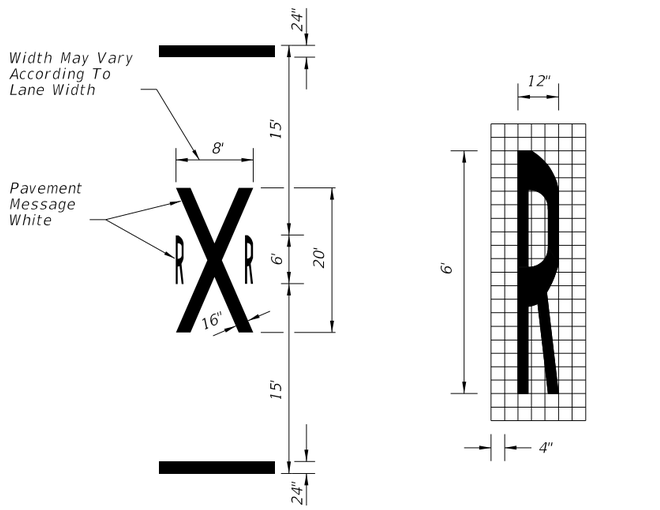

89 s.f. *Does not include 24" bars.

TYPICAL PAVEMENT MARKINGS FOR R/R CROSSING

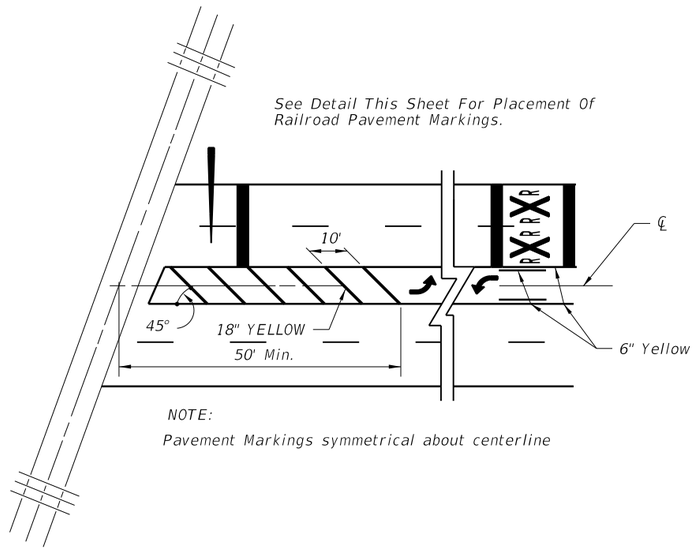

NOTE:
Pavement Markings symmetrical about centerline

PAVEMENT MARKINGS FOR TERMINATION OF TWO WAY LEFT TURN AT R/R CROSSINGS

NOTES:

1. When computing pavement messages, quantities do not include transverse lines.
2. When dynamic devices are not present or are to be installed, the crossbuck shall be located at the future location of the RR gate or signal and gate in accordance with Index No. 17882.
3. Placement of sign W10-1 in a residential or business district, where low speeds are prevalent. The W10-1 sign may be placed a minimum distance of 100' from the crossing. Where street intersections occur between the RR pavement message and the tracks an additional W10-1 sign & additional Pavement message should be used.
4. Recommended location for FTP-61-06 or FTP-62-06 sign, 100' urban & 300' rural in advance of the crossing.
5. A portion of the pavement marking symbol should be directly opposite the W10-1 sign.

SPEED MPH	" A " IN FT.
60	400
55	325
50	250
45	175
40	125
35	100
URBAN	85 MIN.

C:\d\projects\standards\roadway\17300-s\17346-08.dgn rd960rh 2:16:58 PM 6/28/2012

LAST REVISION	REVISION	DESCRIPTION:				
01/01/12			FDOT DESIGN STANDARDS 2013	SPECIAL MARKING AREAS	INDEX NO. 17346	SHEET NO. 8

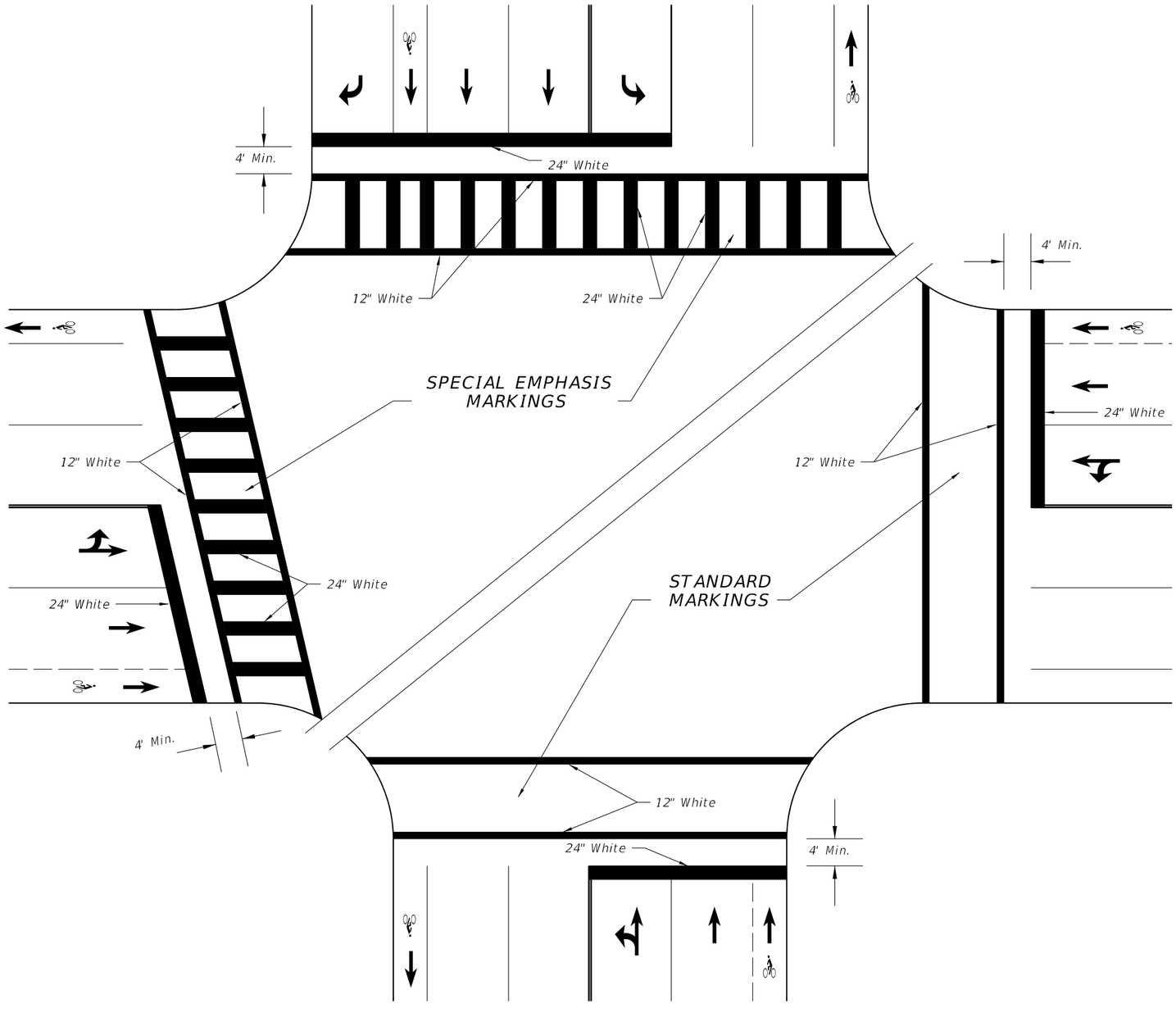

SPECIAL EMPHASIS AND STANDARD CROSSWALKS
SIGNALIZED OR STOP SIGN CONTROLLED INTERSECTION

GENERAL NOTES

1. For traffic and pedestrian signal installation, refer to Index No. 17721 through 17890.
2. For public sidewalk curb ramps, refer to Index No. 304.
3. For pavement marking and sign installation, refer to Indexes 11200 through 17356.
4. Crosswalk minimum widths: Intersection Crosswalk 6'. Midblock Crosswalk 10'.
5. All crosswalk marking shall be white.
6. Longitudinal lines in Special Emphasis Crosswalk shall be 24" wide and spaced to avoid the wheel path of vehicles as shown in detail. The maximum space between markings shall not exceed 60". A longitudinal marking shall be centered at each lane line. Additional longitudinal markings shall be placed at the center of each lane (1/2W).

   Where the Crosswalk is skewed to the lane lane lines, the Special Emphasis longitudal lines should be parallel to the lane line.

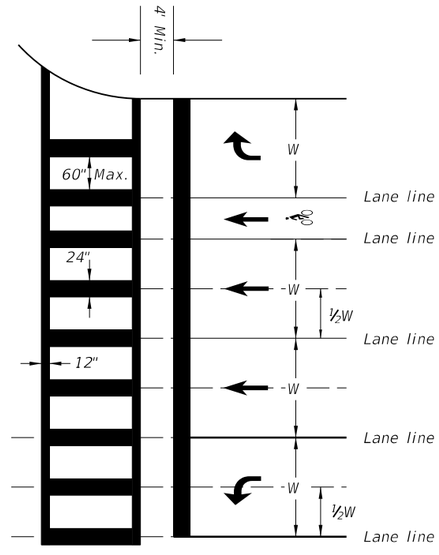

SPECIAL EMPHASIS CROSSWALK MARKING DETAIL

C:\d\projects\standards\roadway\17300-s\17346-09.dgn rd960rh 2:17:00 PM 6/28/2012

LAST REVISION	REVISION	DESCRIPTION:		FDOT DESIGN STANDARDS 2013	SPECIAL MARKING AREAS	INDEX NO.	SHEET NO.
07/01/09						17346	9

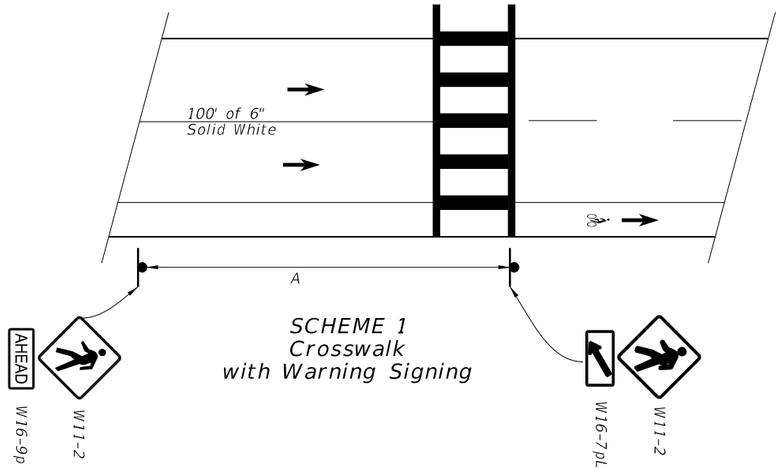

SCHEME 1
Crosswalk
with Warning Signing

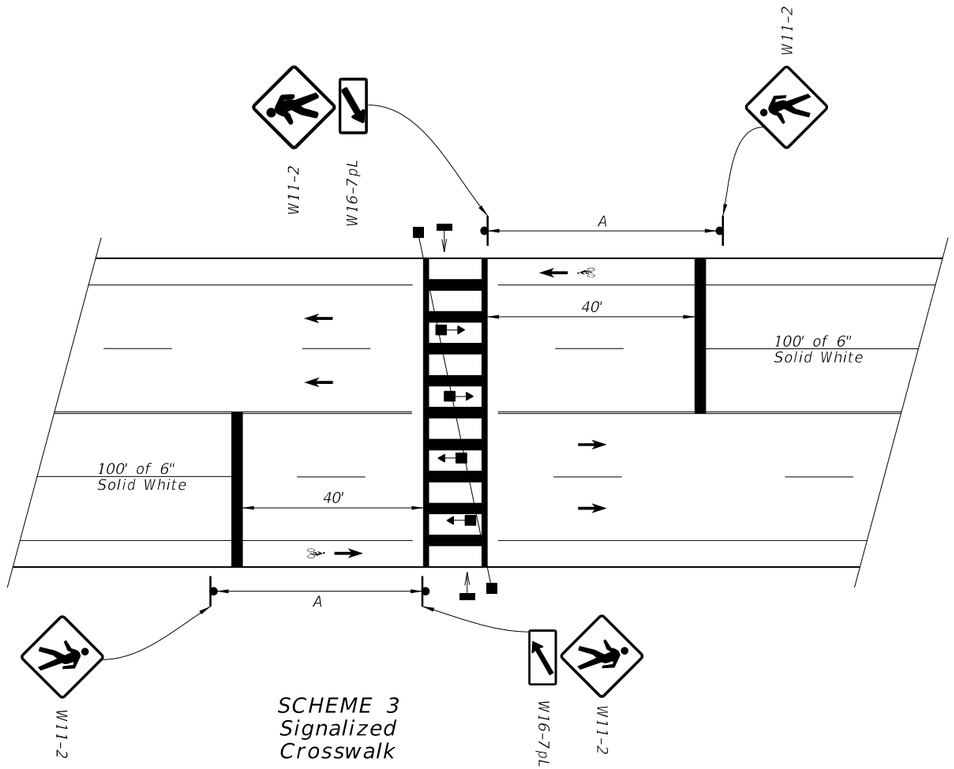

SCHEME 3
Signalized
Crosswalk

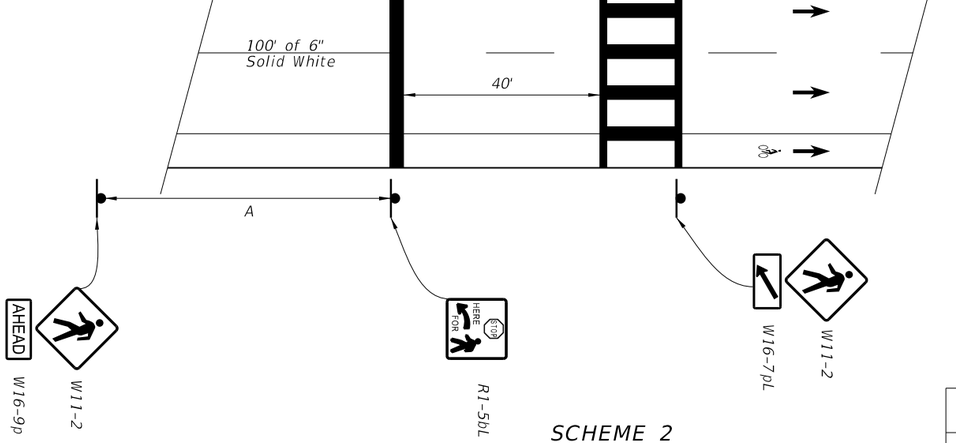

SCHEME 2
Crosswalk
with Stop Signing

APPROACH SPEED MPH	A-SUGGESTED DISTANCE (Ft.)
25 Or Less	200
26 To 35	250
36 To 45	300

1. Plans shall indicate which crosswalk scheme is to be used.
2. The details shown do not depict the signing and markings for multi-lane roadways with divided medians. For these applications, additional signs shall be installed on the median side. Minimum width of Mid-Block Crosswalks is 10'.
3. All mid-block crosswalks shall use special emphasis crosswalk markings.
4. Crosswalk marking should utilize preformed marking materials.

6/28/2012 2:17:02 PM rd960rh C:\d\projects\standards\roadway\17300-s\17346-10.dgn

LAST REVISION	REVISION	DESCRIPTION:			INDEX NO.	SHEET NO.
01/01/12			FDOT DESIGN STANDARDS 2013	SPECIAL MARKING AREAS	17346	10

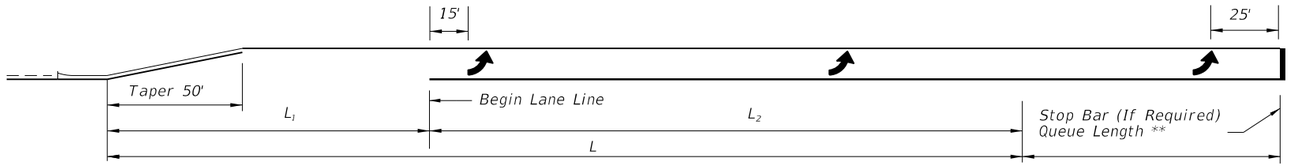

SINGLE LEFT TURNS

** Queue Length Is Measured From The Median Nose Radial Point Or, When A Stop Bar Is Required, From The Stop Bar.

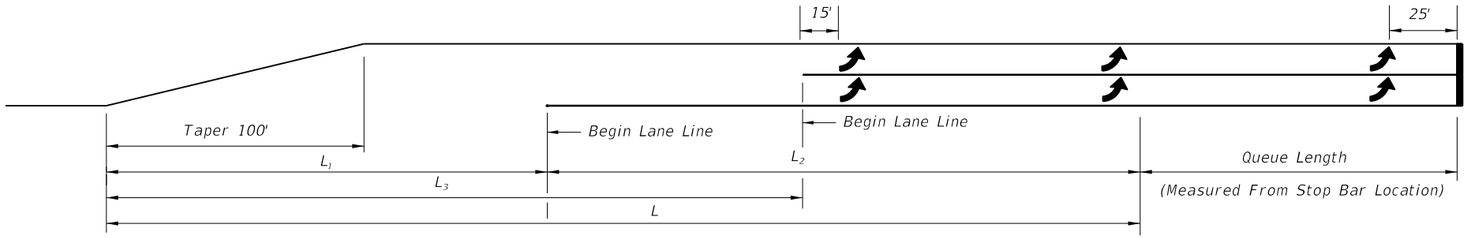

DOUBLE LEFT TURNS

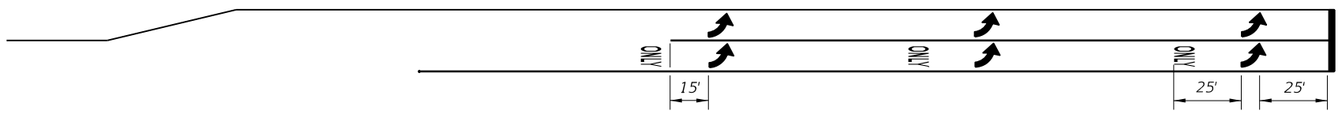

The ONLY pavement message is required for turn lanes, where the thru lane becomes turn lane.

Through Lane Becomes Exclusive Left Turn

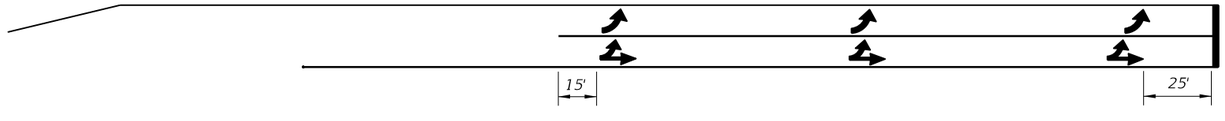

Through Lane Becomes Optional Left Turn

DOUBLE LEFT TURN MARKINGS

	TURN LANES ◦ CURBED AND UNCURBED MEDIANS						
		URBAN CONDITIONS			RURAL CONDITIONS		
Design Speed (mph)	Clearance Distance L_1	Brake To Stop Distance L_2	Total Decel. Distance L	Clearance Distance L_3	Brake To Stop Distance L_2	Total Decel. Distance L	Clearance Distance L_3
35	70'	75'	145'	110'	— —	— —	— —
40	80'	75'	155'	120'	— —	— —	— —
45	85'	100'	185'	135'	— —	— —	— —
50	105'	135'	240'	160'	185'	290'	160'
55	125'	— —	— —	— —	225'	350'	195'
60	145'	— —	— —	— —	260'	405'	230'
65	170'	— —	— —	— —	290'	460'	270'

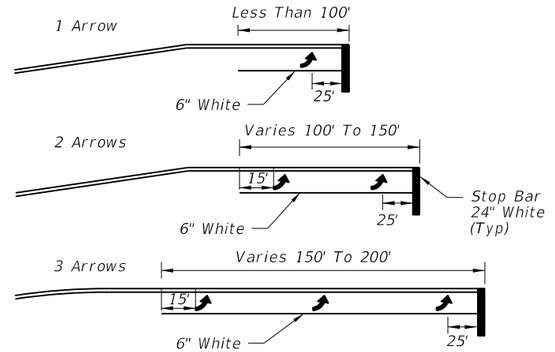

Arrow should be evenly spaced between first and last arrow. Turn lanes longer than 200' add one arrow for each 100' additional length.

ARROW SPACING

NOTES:

1. The "Begin Lane Line" locations are based on the standard lengths shown in Design Standard 301. These locations must be adjusted on a case by case basis for turn lanes not meeting the standard lengths.
2. Yellow left turn edge marking may be used adjacent to raised curb or grass medians if lane use is not readily apparent to drivers approaching a left turn storage lane.
3. Refer to Design Standard Index 301 for Roadway Details.
4. This Index also applies to right turn lanes.

6/28/2012 2:17:04 PM rd960rh C:\d\projects\standards\roadway\17300-s\17346-11.dgn

LAST REVISION	REVISION	DESCRIPTION:		FDOT DESIGN STANDARDS 2013	SPECIAL MARKING AREAS	INDEX NO.	SHEET NO.
07/01/09						17346	11

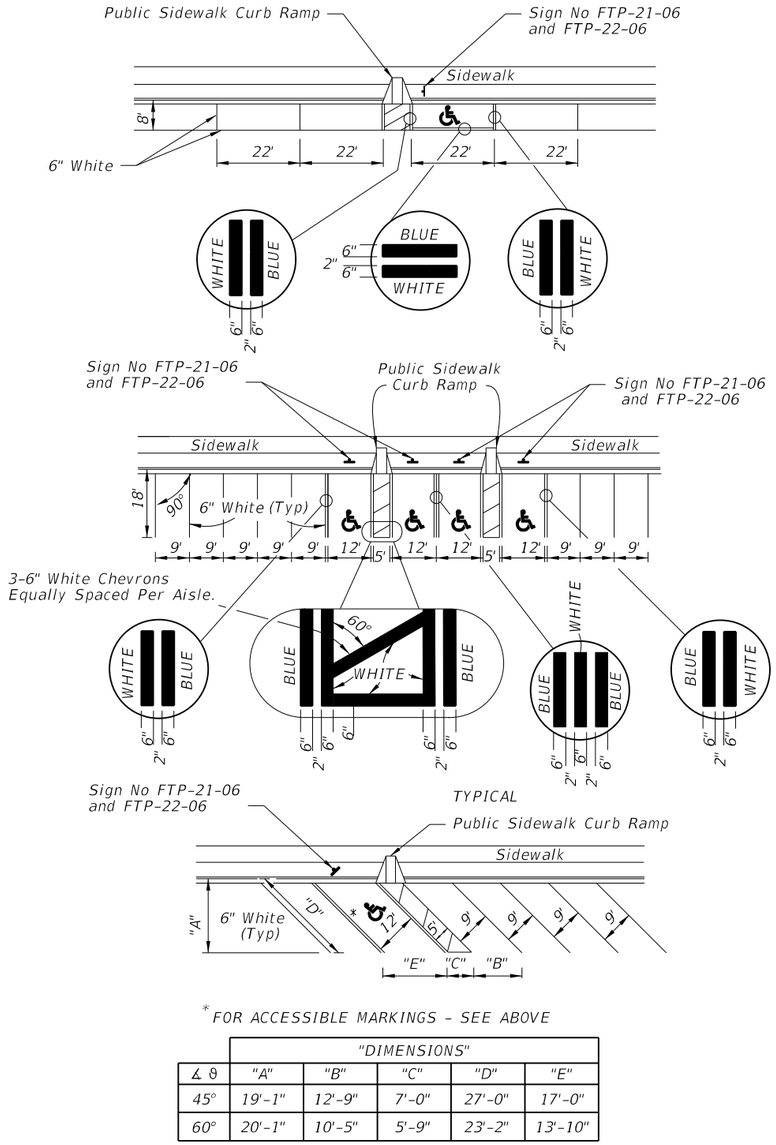

*FOR ACCESSIBLE MARKINGS - SEE ABOVE

∠ θ	"DIMENSIONS" "A"	"B"	"C"	"D"	"E"
45°	19'-1"	12'-9"	7'-0"	27'-0"	17'-0"
60°	20'-1"	10'-5"	5'-9"	23'-2"	13'-10"

NOTES:

1. Dimensions are to the centerline of markings.
2. An Access Aisle is required for each accessible space when angle parking is used.
3. Criteria for pavement markings only, not public sidewalk curb ramp locations. For ramp locations refer to plans.
4. Blue pavement markings shall be tinted to match shade 15180 of Federal Standards 595a.
5. The FTP-22-06 panal shall be mounted below the FTP-21-06 sign.

PAVEMENT MARKING FOR PUBLIC SIDEWALK CURB RAMPS IN REST AREAS

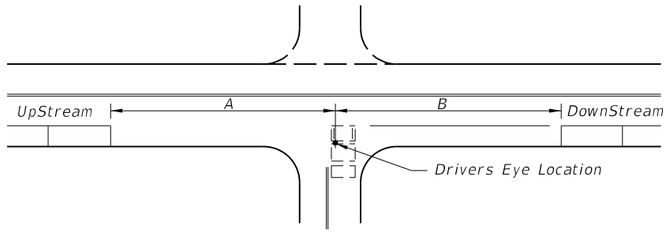

SPEED MPH	UP STREAM (A)	DOWN STREAM (B) 2 LANE	4 LANE
0-30	85'	60'	45'
35	100'	70'	50'

NOTES

1. Distances measured longitudinally along the street from driver location of entering vehicle to end of parking restriction.
2. Distances applicable to intersecting street, major driveways and other driveways to the extent practical.
3. For nonsignalized intersections, the values above shall be compared with the values for signalized intersections and the maximum restrictions implemented. These restrictions apply to both accessible and nonaccessible parking.

MINIMUM PARKING RESTRICTION FOR NONSIGNALIZED INTERSECTIONS

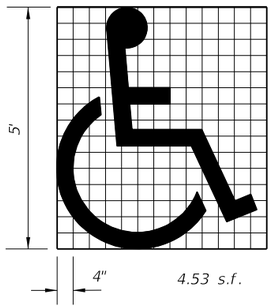

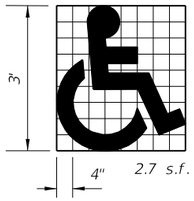

Use of pavement symbol in accessible parking spaces is optional, when used the symbol shall be 3' or 5' high and white in color.

UNIVERSAL SYMBOL OF ACCESSIBILITY

GENERAL NOTES (Signalized & Nonsignalized)

1. For entrances to a one-way street, the downstream restriction may be reduced to 20'.
2. Parking shall not be allowed within 20' of a crosswalk.
3. All parking lane markings shall be 6" white.
4. Parking lane lines shall be broken at driveways.
5. Refer to Chapter 316, Fla. Statutes, for laws governing parking spaces.
6. Where curb and gutter is used, the gutter pan width may be included as part of the minimum width of parking lane, but desirably the lane width should be in addition to that of the gutter pan.

TYPE I

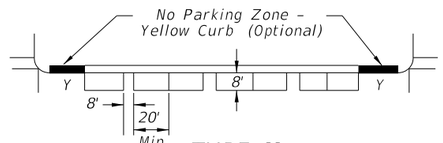

TYPE II

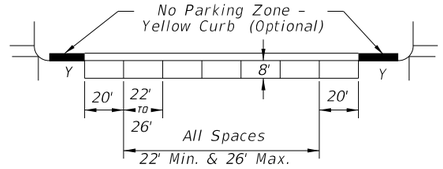

TYPE III

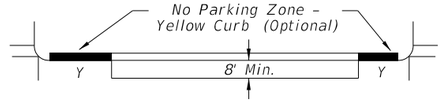

SPEED LIMIT MPH	SIGNALIZED INTERSECTIONS
0-30	30'
35	50'

DISTANCE FROM CURB RADIUS (Y)

PARKING RESTRICTION (FT.) FOR SIGNALIZED INTERSECTION

NOTES:

1. Parking restrictions measured from curb radius point.
2. Restrictions for accessible parking are the same as those applied to nonsignalized intersections.

MINIMUM PARKING RESTRICTION FOR SIGNALIZED INTERSECTION

C:\d\projects\standards\roadway\17300-s\17346-12.dgn rd960rh 2:17:06 PM 6/28/2012

LAST REVISION	REVISION	DESCRIPTION:				
07/01/09			FDOT DESIGN STANDARDS 2013	SPECIAL MARKING AREAS	INDEX NO. 17346	SHEET NO. 12

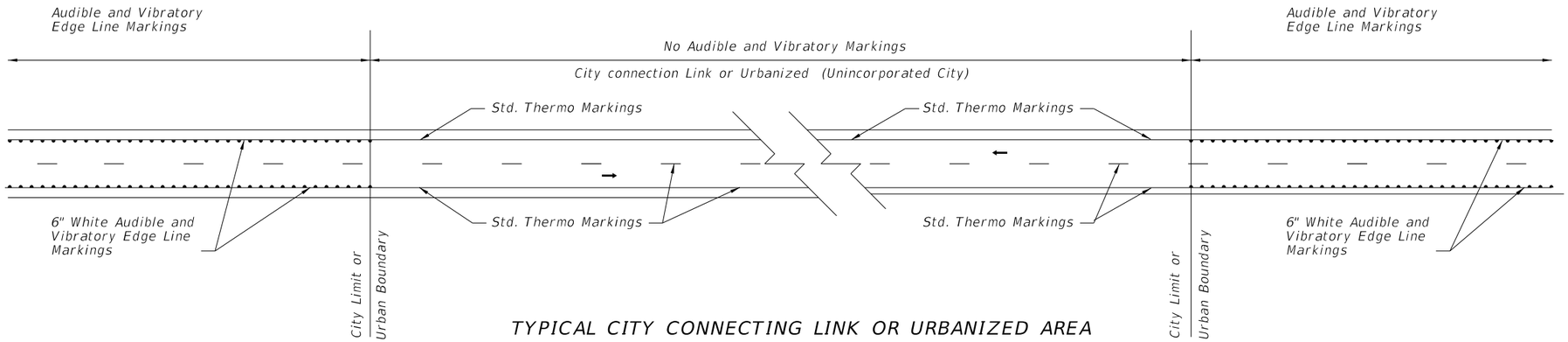

TYPICAL CITY CONNECTING LINK OR URBANIZED AREA

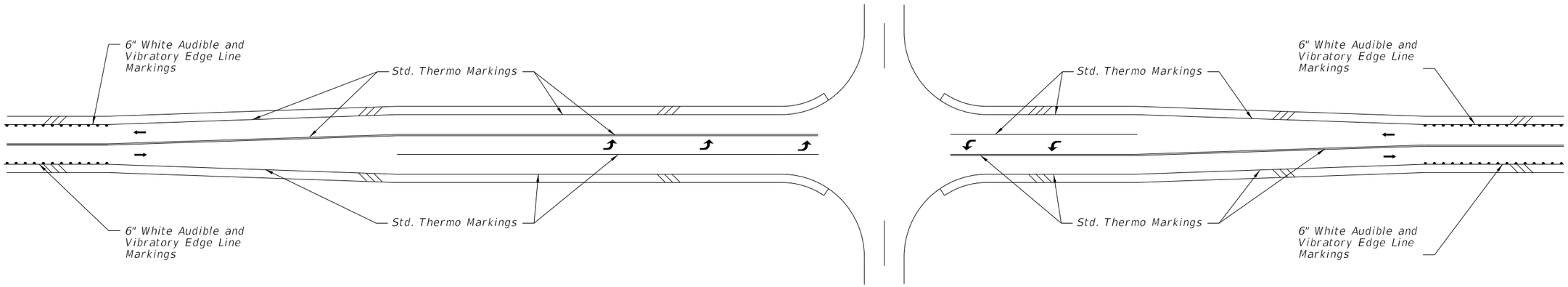

TYPICAL RURAL INTERSECTION WITH TURN LANES

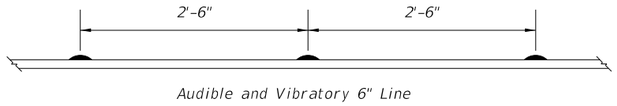

Audible and Vibratory 6" Line

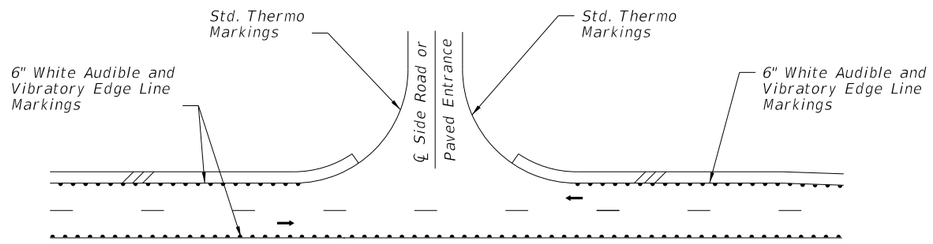

TYPICAL RURAL INTERSECTION WITHOUT TURN LANES

AUDIBLE AND VIBRATORY MARKINGS

2 LANE ROADWAYS

LAST REVISION	REVISION	DESCRIPTION:		FDOT DESIGN STANDARDS 2013	SPECIAL MARKING AREAS	INDEX NO.	SHEET NO.
07/01/09						17346	13

C:\d\projects\standards\roadway\17300-s\17346-13.dgn rd960rh 2:17:08 PM 6/28/2012

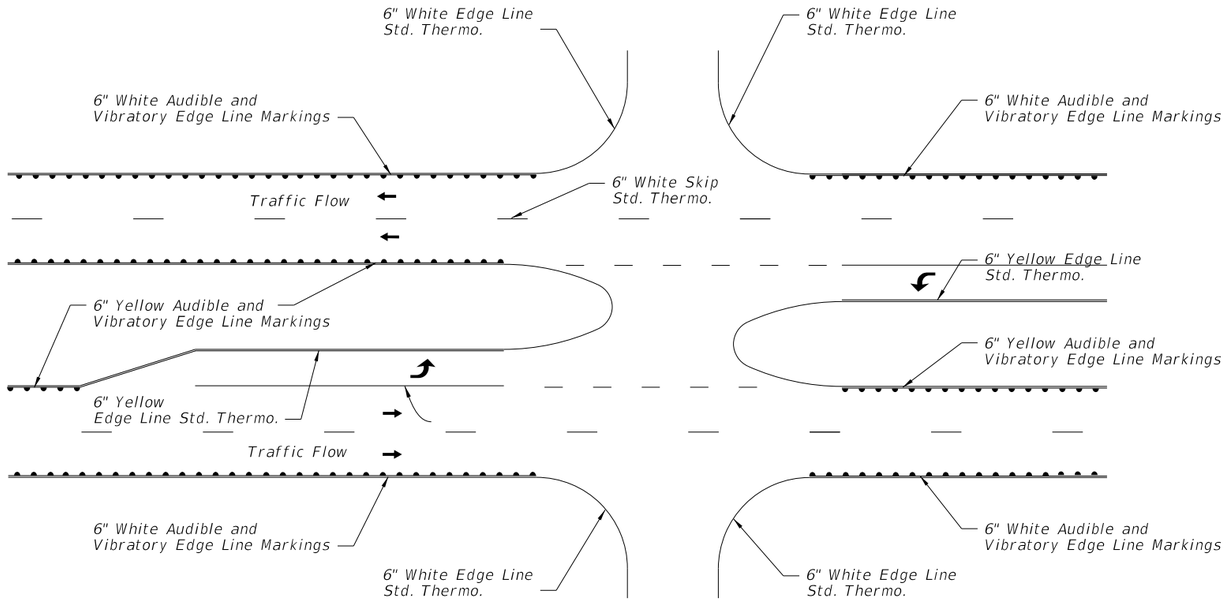

1. The Contractor Shall Adjust The Maintenance Of Traffic During Installation To Provide Sufficient Time For The Markings To Bear Traffic.
2. The Height Of The Transverse Bar For Markings Shall Be A Minimum Of 0.45 Inches Above The Pavement Surface At The Edge Of The Marking.
3. Transverse Bars Shall Be Evenly Space In The Marking At Intervals Of 30 Inches Center To Center.
4. The Transverse Bar May Have A Drainage Channel On Each Bar. The Width Of The Drainage Channel May Not Exceed 0.25 Inches At The Bottom Of The Channel.
5. Audible And Vibratory Markings Shall Only Be Installed On Centerline Markings Of Two Lane Roads When Shown In The Plans.
6. When Raised Pavement Markers Conflict With The Installation Of The Centerline Markings, The Contractor Shall Be Responsible For Removing And Replaceing The Raised Pavement Markings. The Additional Expenses Associated With The Raised Pavement Markings Shall Be Included In The Cost Of The Marking.
7. Grinding Is An Acceptable Method Of Removal Of The Existing Markings Where Markings Are Installed As Replacement Markings.
8. The Specifications Allow The Audible Markings To Utilize A Flat Base Line Or An Inverted Rib Profile Base Line.

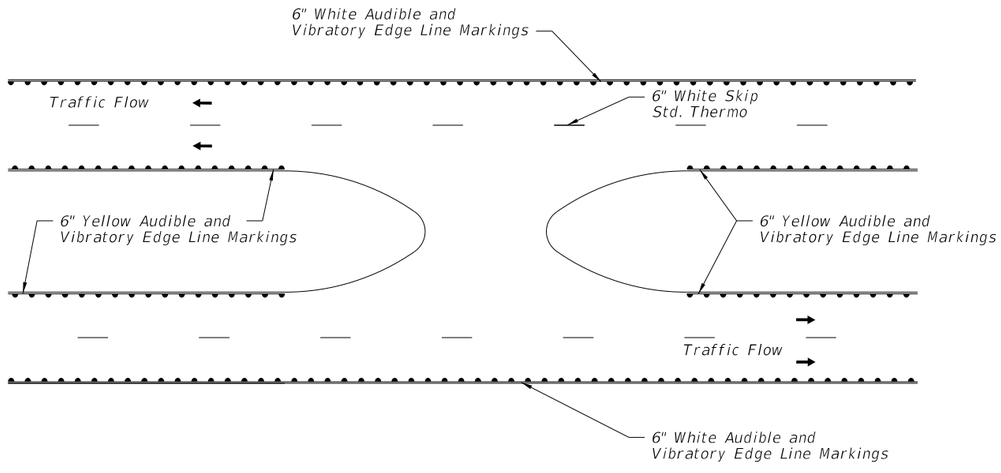

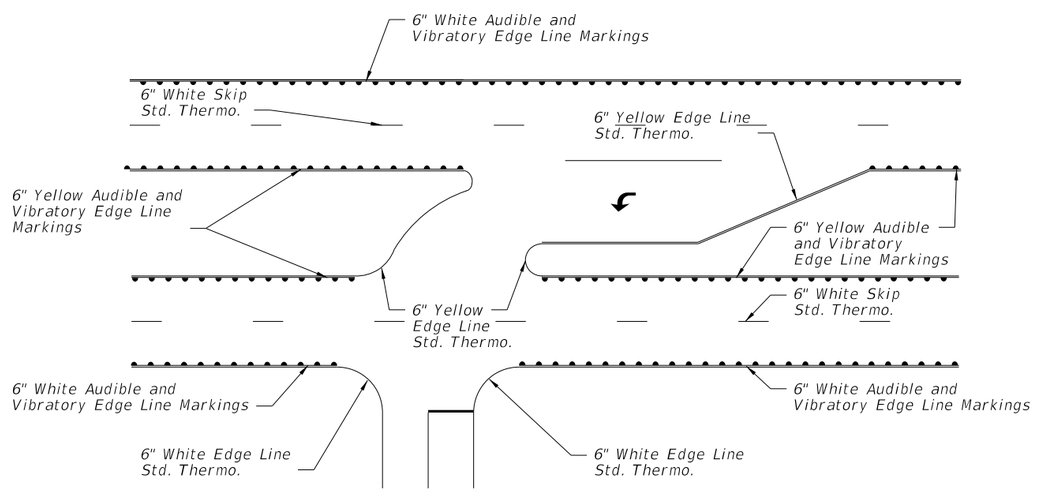

AUDIBLE AND VIBRATORY MARKINGS

MULTI-LANE ROADWAYS

LAST REVISION	REVISION	DESCRIPTION:		FDOT DESIGN STANDARDS 2013	SPECIAL MARKING AREAS	INDEX NO.	SHEET NO.
07/01/10						17346	14

6/28/2012 2:17:10 PM rd960rh C:\d\projects\standards\roadway\17300-s\17346-14.dgn

1. *Recommended placement of bicycle lane markings:*

   a) At the beginning of a bicycle lane, on the far side of major intersections, and prior to and within the bicycle lane keyhole.

   b) Along the roadway as needed to provide a maximum spacing of 1,320 feet for posted speeds less than 45 mph, 2,640 feet for a posted speed of 45 mph or greater.

2. *Recommended spacing for shared lane marking symbols: Immediately after intersections and at a maximum spacing of 250 feet.*
3. *All pavement markings and pavement messages shall be White.*
4. *All pavement messages shall be preformed thermoplastic.*
5. *Bike lane signs (R3-17, R3-17a, R3-17b) are not required.*

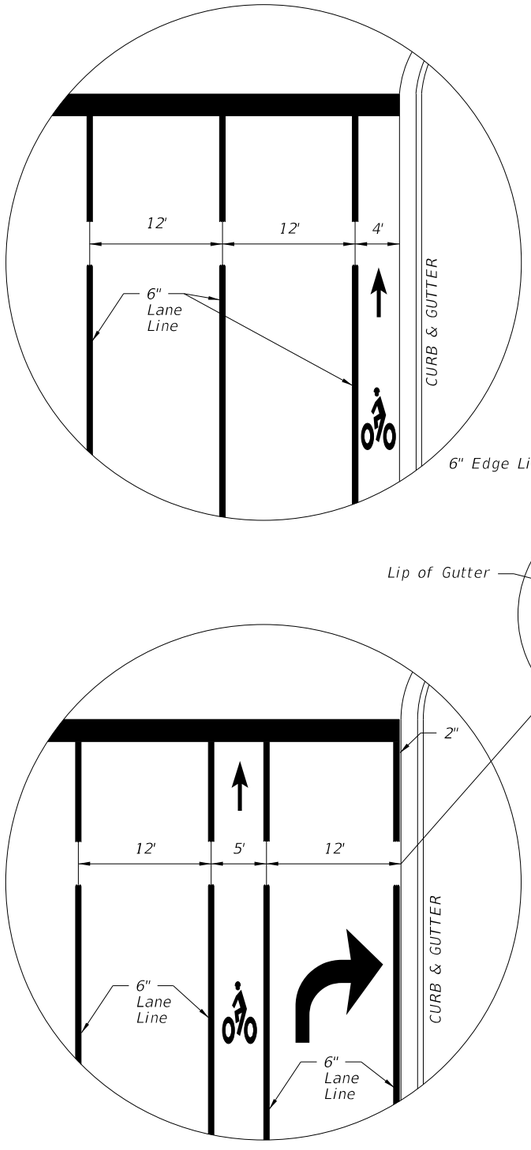

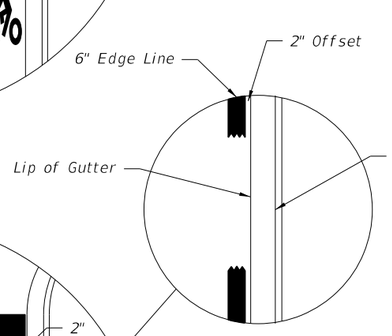

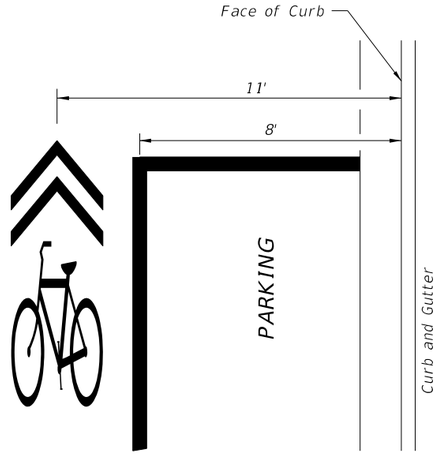

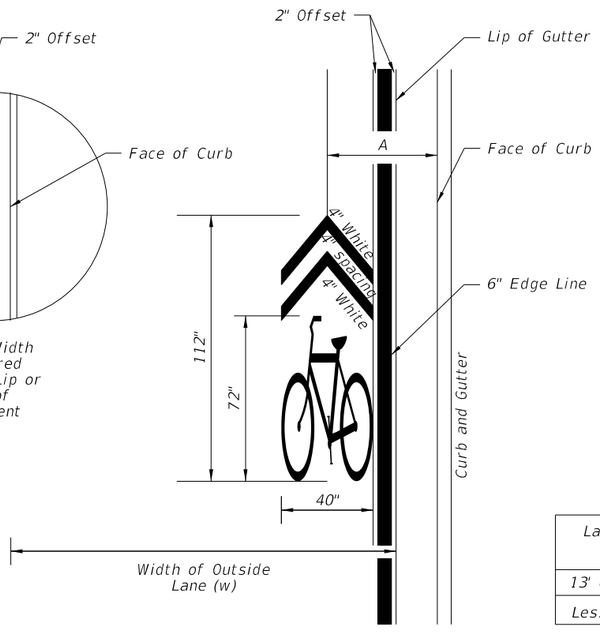

Lane Width (w)	Sharrow ℄ (A)
13' or Greater	4'
Less Than 13'	5½' **

** *For lane widths less than 11' in width, the symbol shall be centered in the lane.*

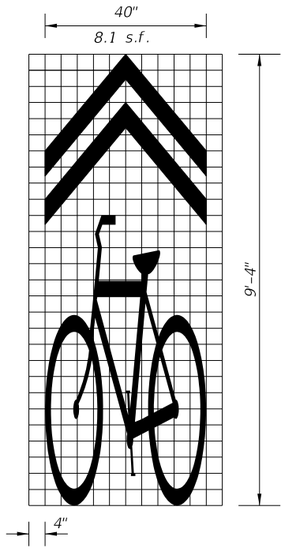

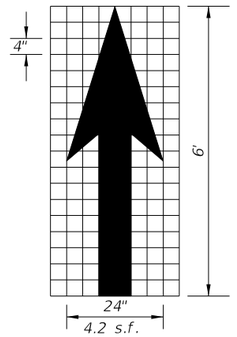

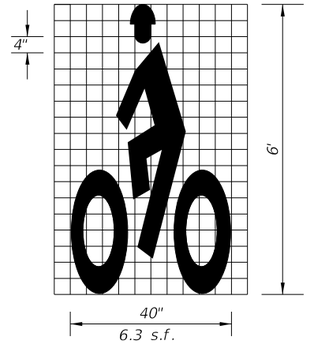

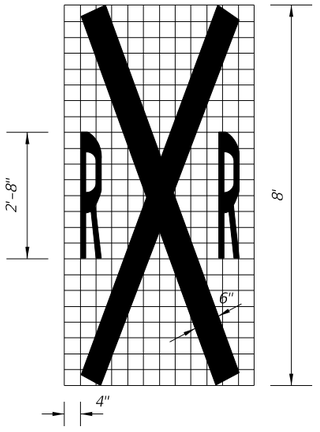

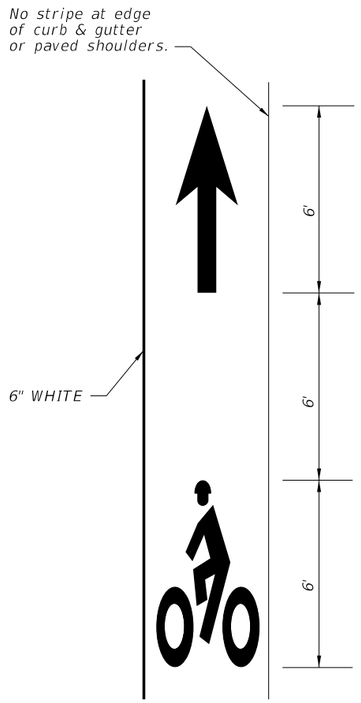

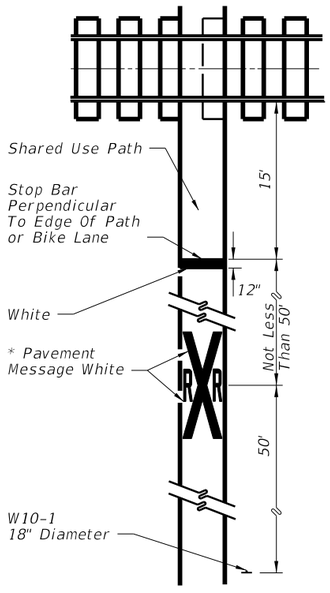

* *When used in bike lane, markings shall be placed adjacent to markings in travel lane and W10-1 sign shall be deleted.*

6/28/2012 2:17:19 PM rd960rh C:\d\projects\standards\roadway\17300-s\17347-01.dgn

LAST REVISION	REVISION	DESCRIPTION:			INDEX NO.	SHEET NO.
07/01/12			FDOT DESIGN STANDARDS 2013	BICYCLE MARKINGS	17347	1

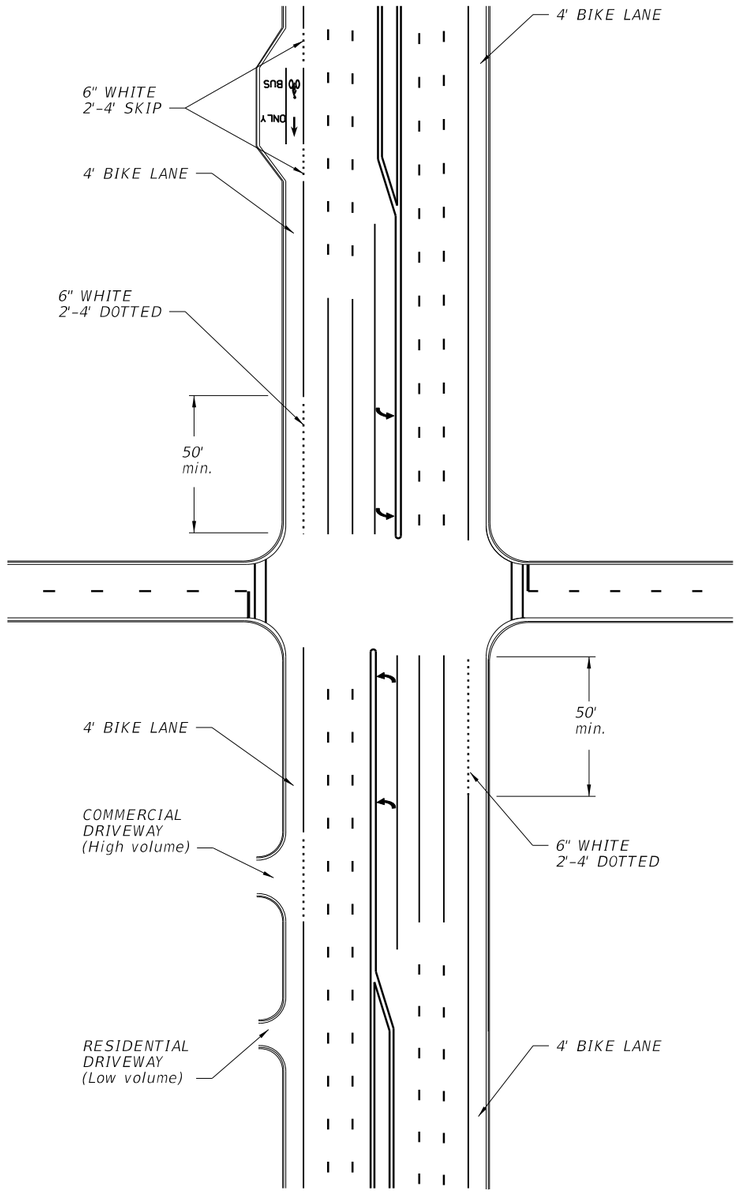

INTERSECTION WITH BUS BAY, NO RIGHT TURN LANE, CURB AND GUTTER TYPICAL SECTION

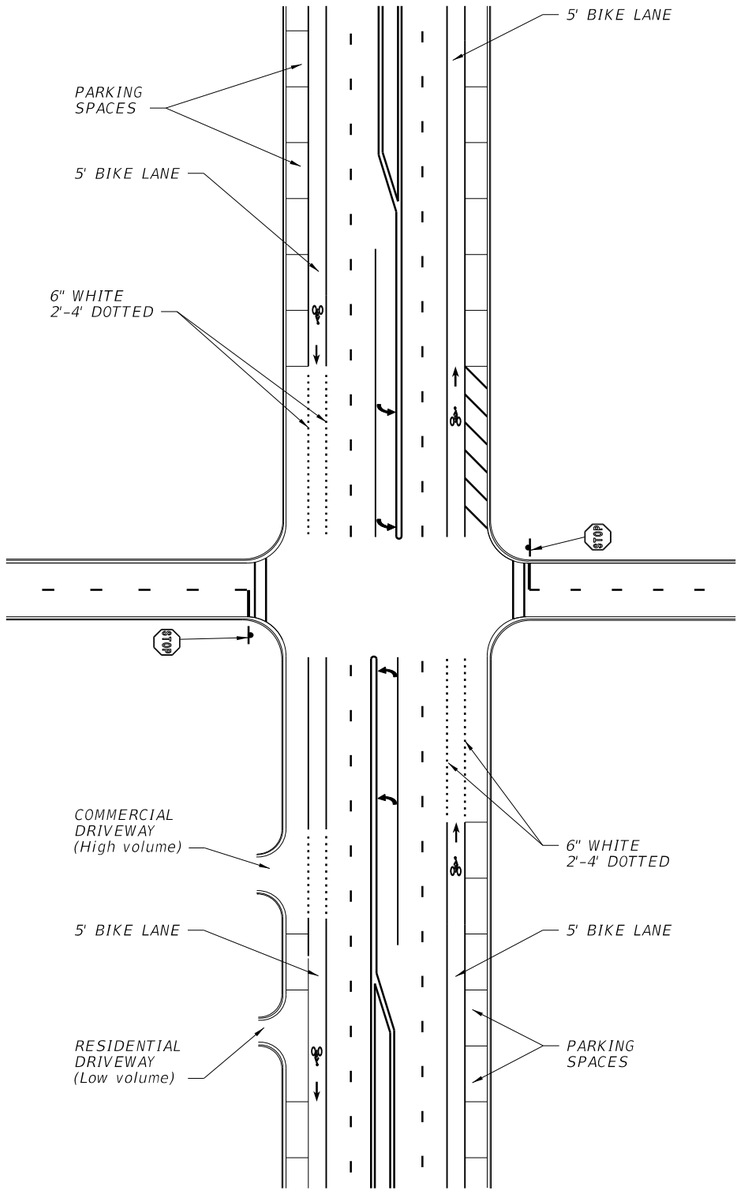

INTERSECTION WITH ON STREET PARKING, NO RIGHT TURN LANE, CURB AND GUTTER TYPICAL SECTION

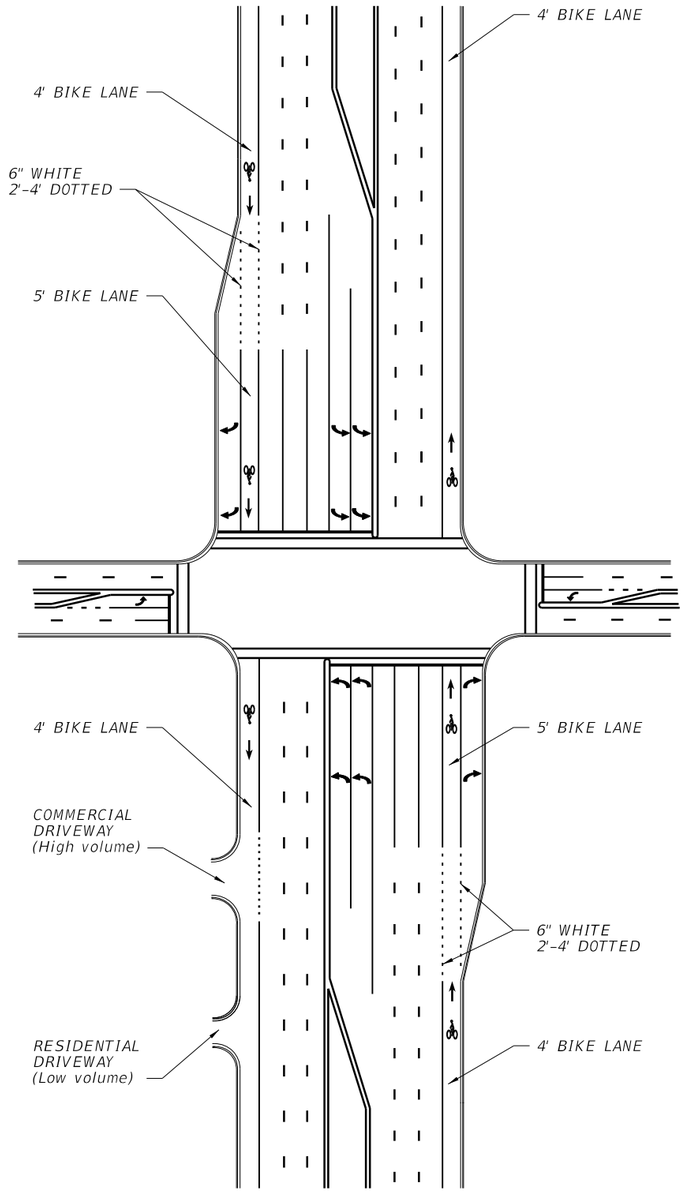

INTERSECTION WITH SEPARATE RIGHT TURN LANE, CURB AND GUTTER TYPICAL SECTION

6/28/2012 2:17:21 PM rd960rh C:\d\projects\standards\roadway\17300-s\17347-02.dgn

LAST REVISION	REVISION	DESCRIPTION:				
07/01/12			FDOT DESIGN STANDARDS 2013	BICYCLE MARKINGS	INDEX NO. 17347	SHEET NO. 2

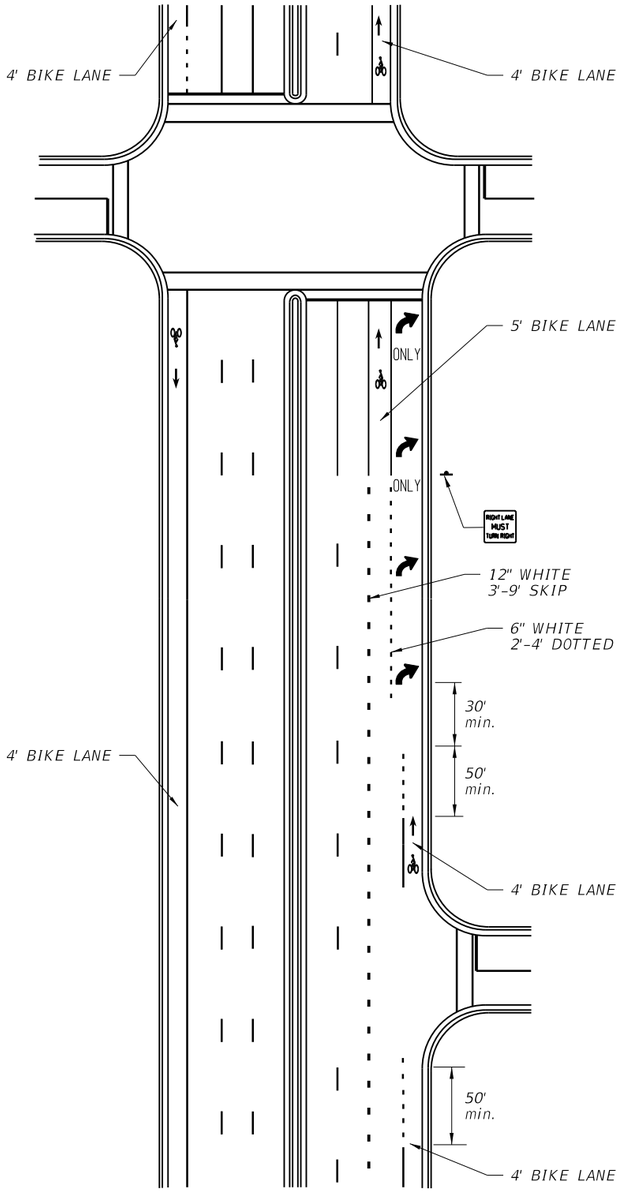

INTERSECTION WITH RIGHT TURN DROP LANE, CURB AND GUTTER TYPICAL SECTION

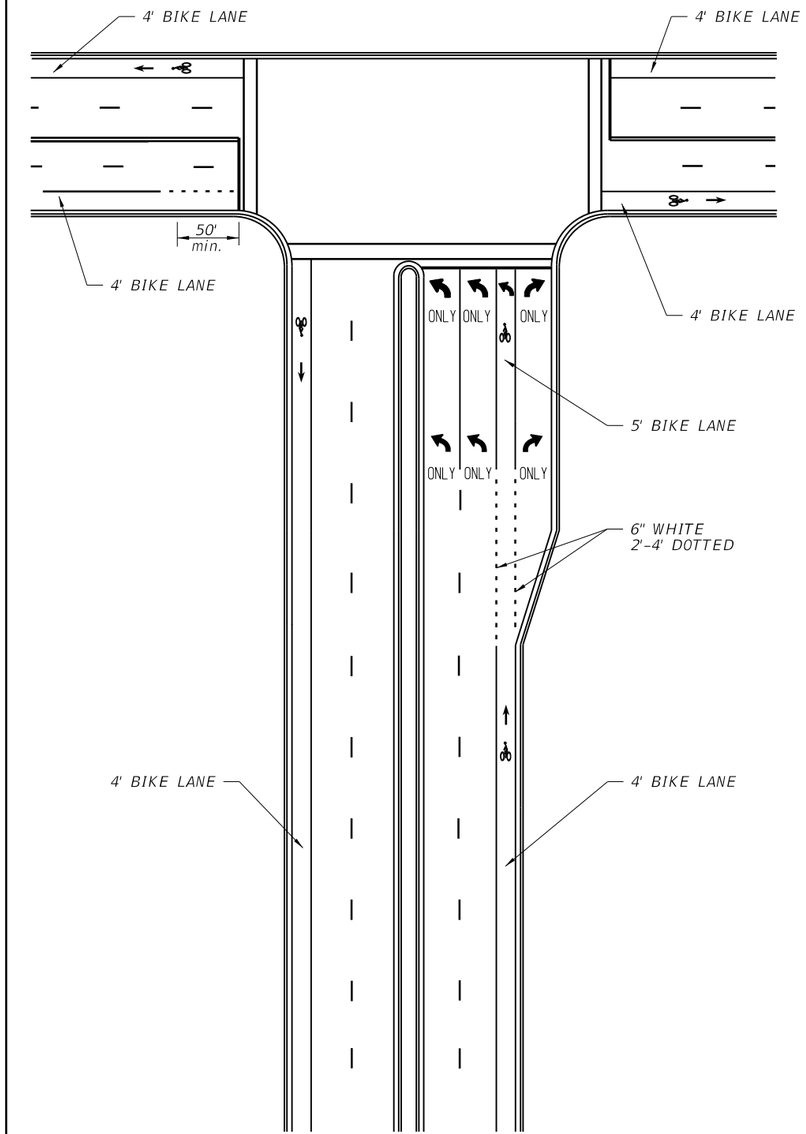

"TEE" INTERSECTION WITH SEPARATE RIGHT TURN LANE, CURB & GUTTER TYPICAL SECTION

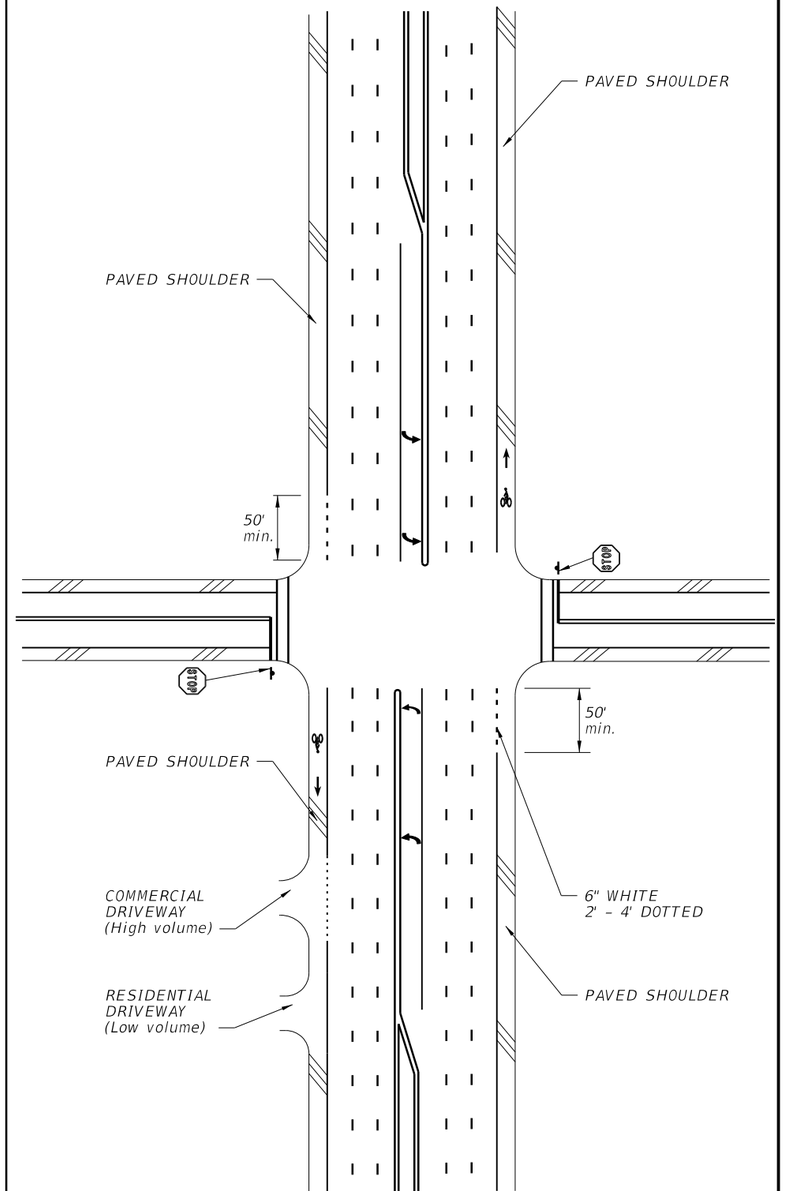

INTERSECTION, NO RIGHT TURN LANE, FLUSH SHOULDER TYPICAL SECTION

LAST REVISION	REVISION	DESCRIPTION:				
07/01/12			FDOT DESIGN STANDARDS 2013	BICYCLE MARKINGS	INDEX NO. 17347	SHEET NO. 3

C:\d\projects\standards\roadway\17300-s\17347-03.dgn
rd960rh
2:17:23 PM
6/28/2012

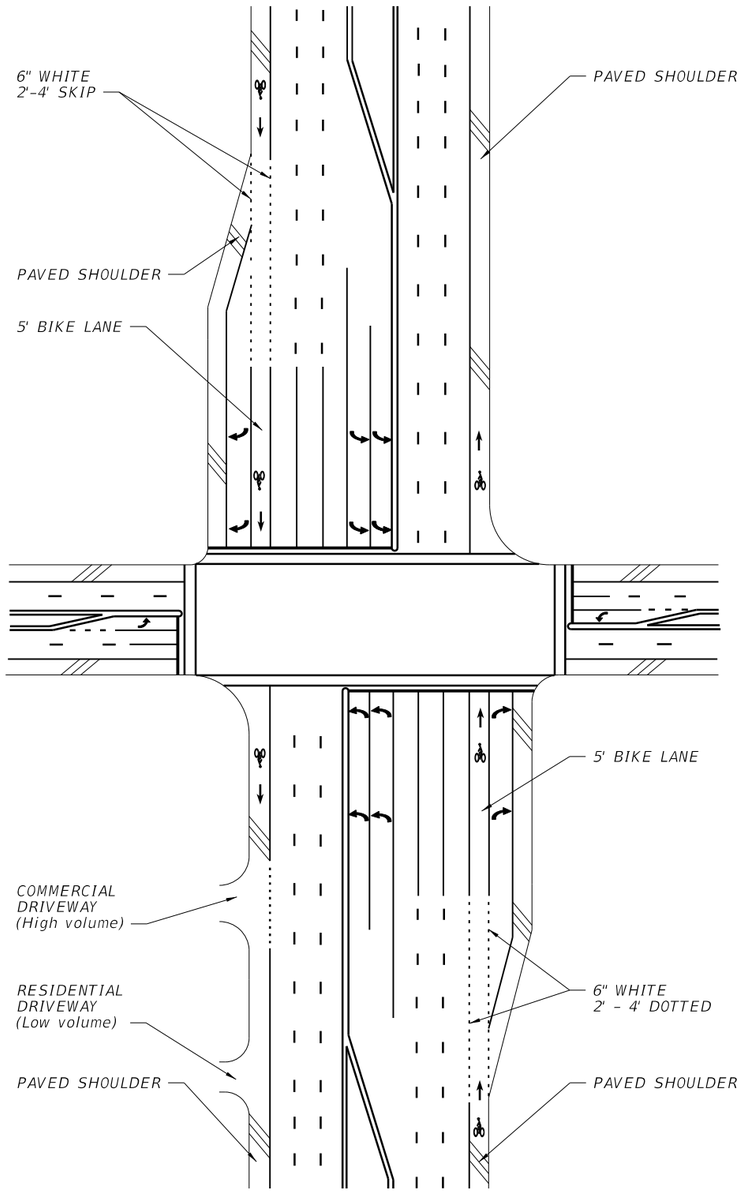

INTERSECTION WITH SEPARATE RIGHT TURN LANE, FLUSH SHOULDER TYPICAL SECTION

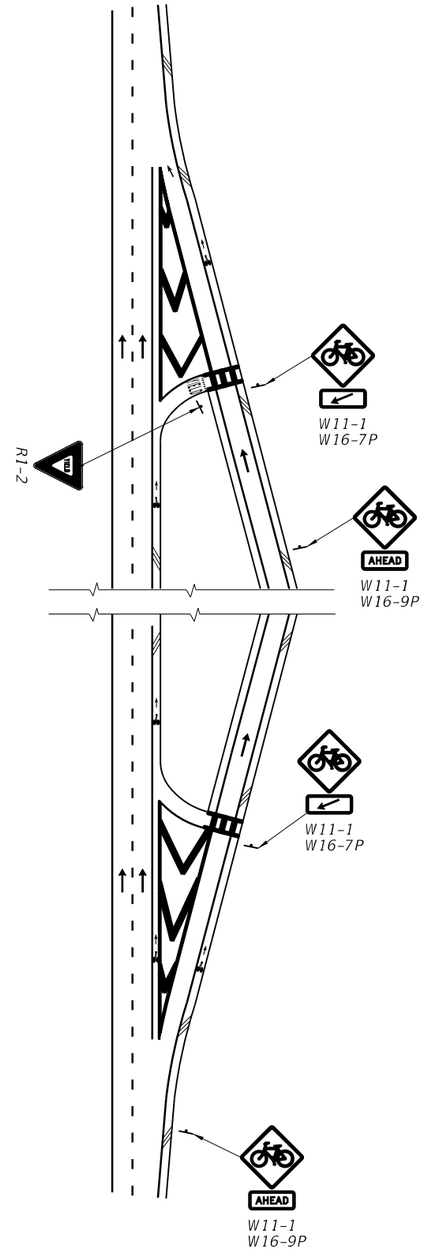

INTERCHANGE RAMPS WITH MARKED CROSSING, FLUSH SHOULDER TYPICAL SECTION

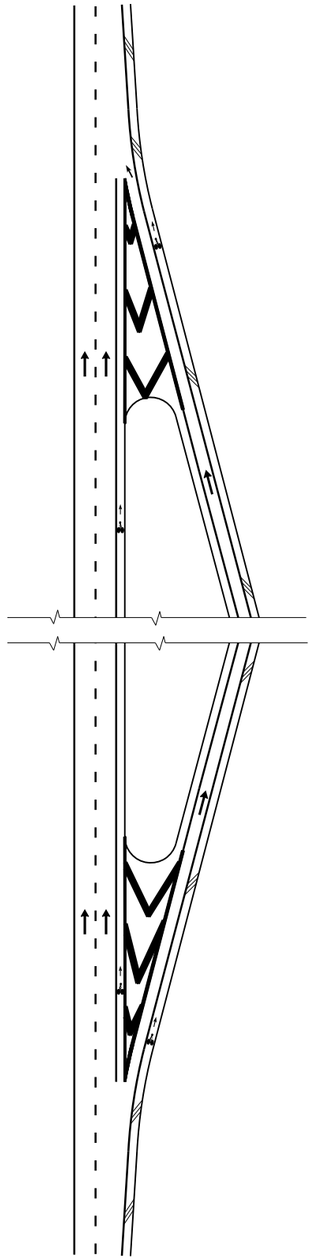

INTERCHANGE RAMPS, FLUSH SHOULDER TYPICAL SECTION

C:\d\projects\standards\roadway\17300-s\17347-04.dgn
rd960rh
2:17:25 PM
6/28/2012

LAST REVISION	REVISION	DESCRIPTION:				
01/01/12			FDOT DESIGN STANDARDS 2013	BICYCLE MARKINGS	INDEX NO. 17347	SHEET NO. 4

CASE I Type 1 Object Markers shall consist of nine yellow reflectors mounted on a yellow reflective background or consist of a retroreflective panel of the same size.

CASE II End of Road Markers shall consist of nine red reflectors mounted on a red reflective background or consist of a retroreflective panel of the same size.

NOTES:

1. This index applicable to residential and minor streets only. Major streets to be evaluated on a case by case basis.
2. "T"-intersection-Two-Way arrows and reflectors are optional. The need should be based on a review of each location.
3. For additional details on aluminum round post, sign panel material and bolts, nuts and washers see Index Nos. 11860.
4. Case I Installation – The arrow panels and object markers shall be located approximately 20', but not less than 12' from the edge of the travel lane.
5. Dead end sign shall be posted a sufficient advance distance to permit the vehicle operator to avoid the dead end by turning off, if possible, at the nearest intersecting street.
6. For pavement marking see Index No. 17346
7. No guardrail is required unless special field conditions require its use.

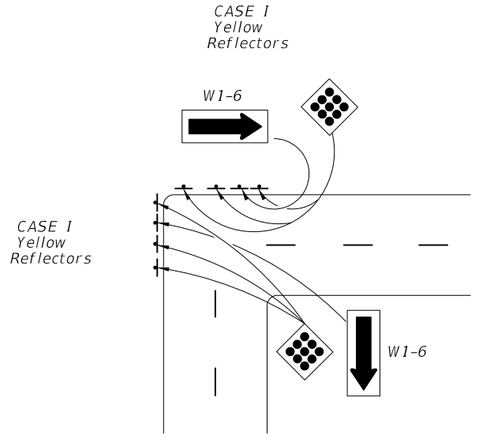

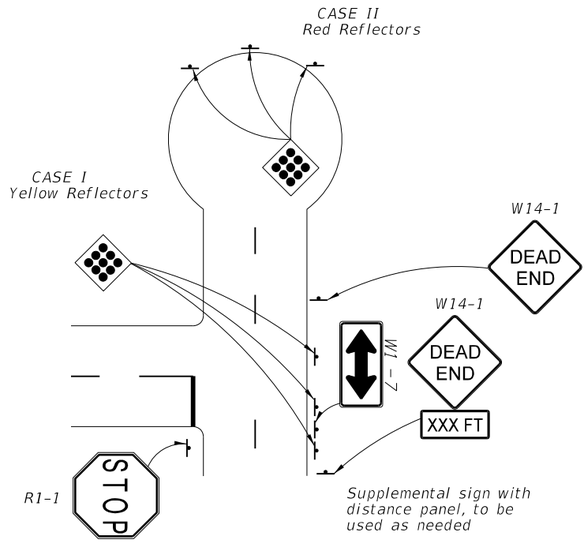

Supplemental sign with distance panel, to be used as needed

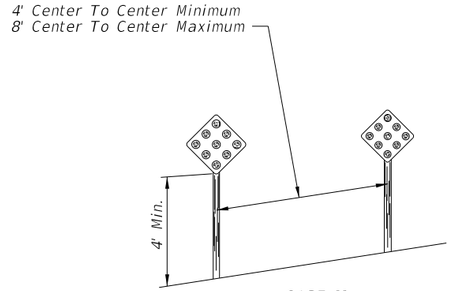

CASE II
Red Reflectors

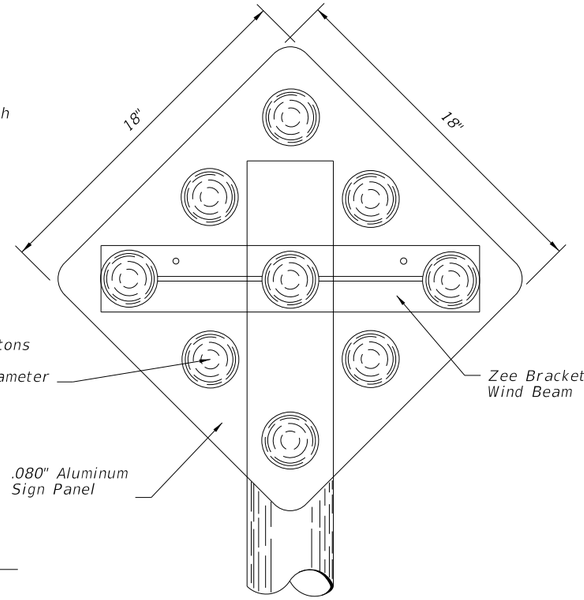

Object markers shall be installed on 2" Ø x ⅛" Aluminum Round Post.
⅜" Ø Aluminum Button Head Bolt with Nut and Lockwasher or $^{15}/_{16}$" Ø Stainless Steel Hex Head Bolt with Flat Washer under Head and Lockwasher under Nut. Post foundation shall be installed in accordance with Index No. 11860.

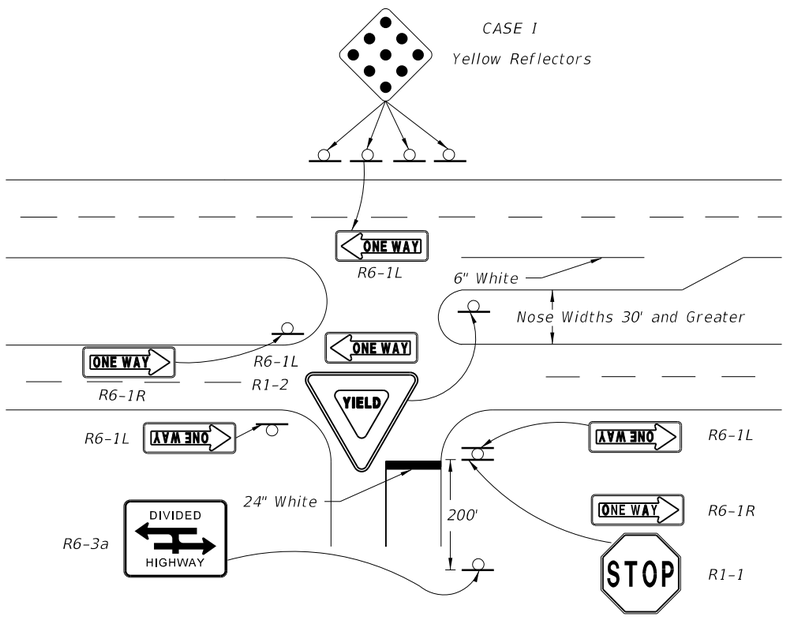

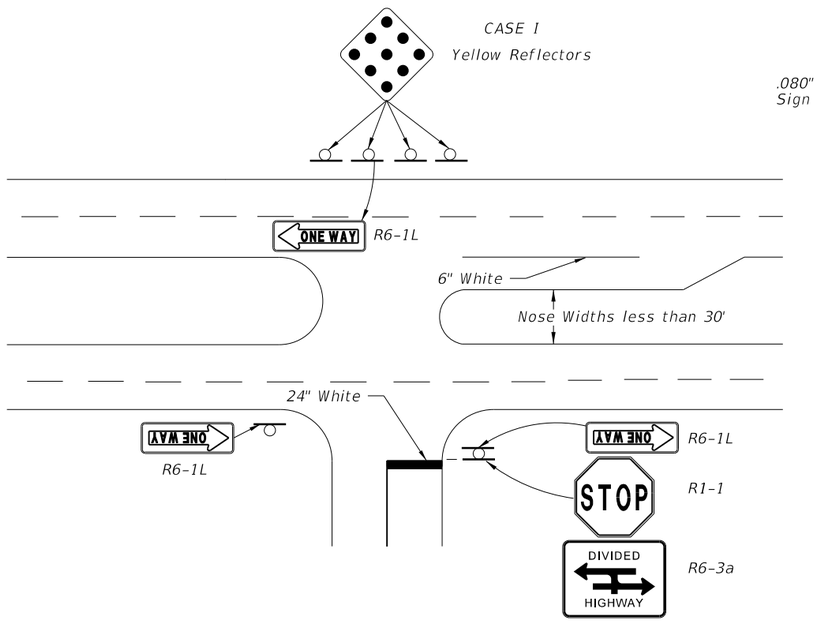

LAST REVISION	REVISION	DESCRIPTION:				
07/01/12			FDOT DESIGN STANDARDS 2013	TRAFFIC CONTROLS FOR STREET TERMINATIONS	INDEX NO. 17349	SHEET NO. 1

C:\d\projects\standards\roadway\17300-s\17349-01.dgn
rd960rh
2:17:28 PM
6/28/2012

** Note:

Two assemblies are required; one for each side of the ramp, showing those services in each particular direction from the ramp terminal.

Ramp mounted signs shall be installed to avoid conflict with existing signs and in no case should they be placed within 100' of another sign.

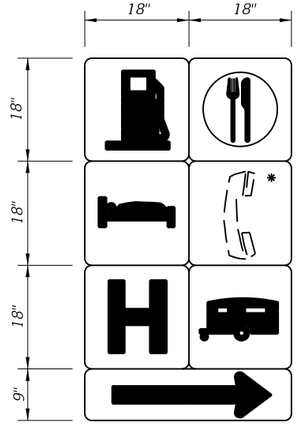

DETAIL "D"

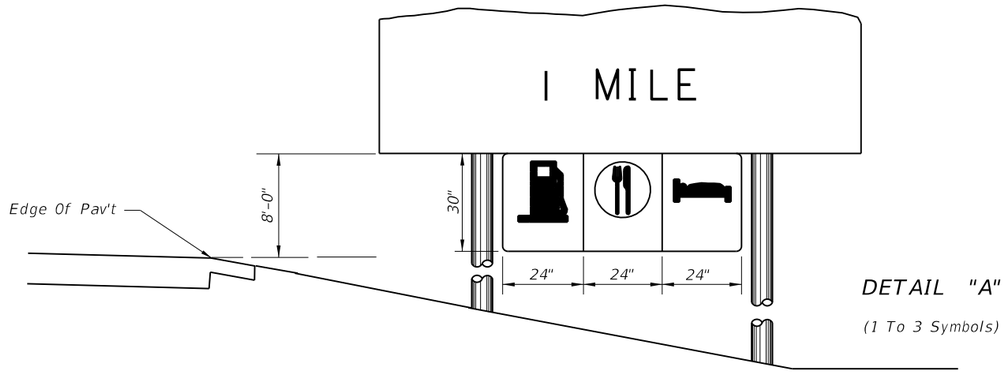

DETAIL "A"

(1 To 3 Symbols)

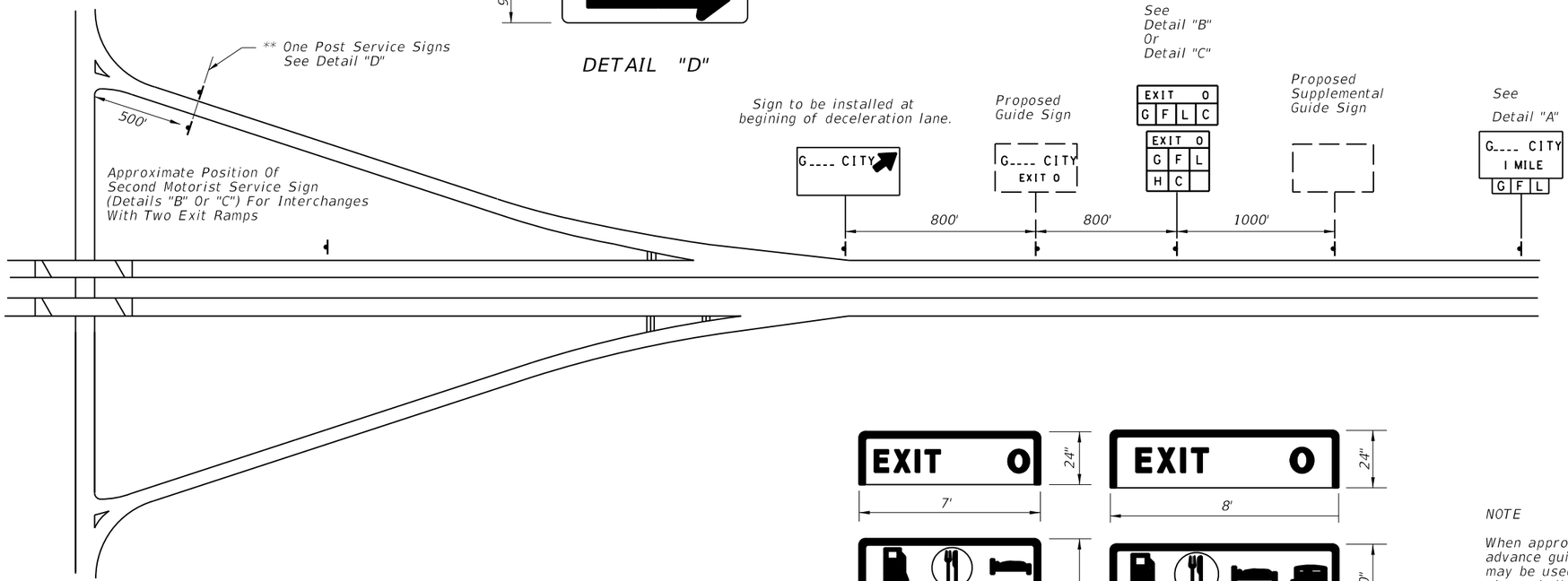

GENERAL NOTES

1. Only those services meeting criteria established by the Department and approved by the State Traffic Operations Engineer for each interchange shall be shown. Symbol signs for motorist services shall always appear in the following order reading from left to right and top to bottom: Gas, Food, Lodging, Phone * , Hospital, Camping.

   * The phone symbol shall not be shown whenever any Gas, Food, Lodging or Camping symbol appears.

2. Symbols shall appear consecutively on the sign with no positions left blank or reserved for intermediate symbols not currently approved for a particular interchange.

3. All motorist service signs to have White Legend and Border with Blue Background.

4. For mounting details see Index 11200 for Type "A" breakaway or Index 11860 for Type "C" Frangibility.

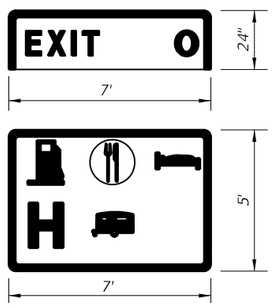

DETAIL "B"

(4 To 6 Symbols)

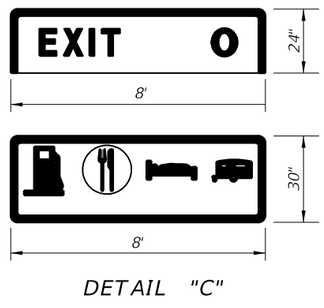

DETAIL "C"

(4 Symbols)

NOTE

When approved for attachment to the advance guide signs, up to 3 services may be used for an exit. The symbol signs shall be suspended from the guide sign panel or existing wind beams. Symbol signs are not to be connected to existing sign posts.

The mounting height of the advance guide sign shall be increased, where necessary, to provide 8' between the level of the pavement edge and the bottom of the guide sign, prior to mounting the supplementary panel.

6/28/2012 2:17:30 PM rd960rh C:\d\projects\standards\roadway\17300-s\17350-01.dgn

LAST REVISION	REVISION	DESCRIPTION:			INDEX NO.	SHEET NO.
07/01/09			FDOT DESIGN STANDARDS 2013	SIGNING FOR MOTORIST SERVICES	17350	1

Sign No. FTP-10-06

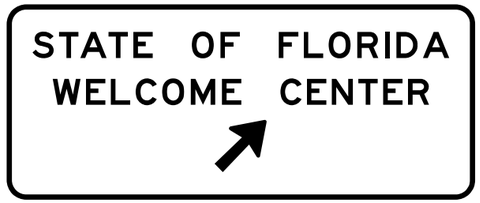

Sign No. FTP-11-06

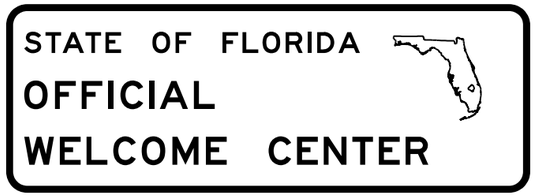

Sign No. FTP-12-06

Sign No. FTP-13-06

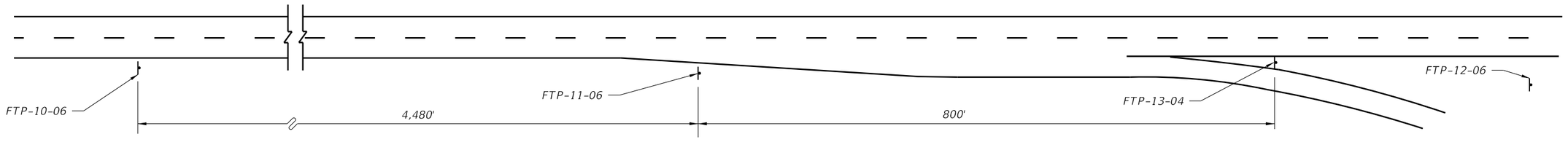

Note: Roadway not drawn to scale
Distances shown are adequate for driver communication but may be altered slightly if conditions require.

Sign No. FTP-14-06

Note: Sign FTP-14-06 shall be used as a supplemental guide sign at interchanges which have a Tourist Information Center approved for such signing (locate half-way between normal guide signs)

Notes:

1. Signs and sign structures shall be erected in accordance with the details shown on Index No. 11200.
2. Sign FTP-12-06 shall be located on the Welcome Center grounds in proximity to the building and as far from the main line roadway as possible (2 signs back to back).
3. Sign FTP-10-06, 11-06, 12-06 shall be located as limited access highways only.
4. All legend to be Series E.
5. See Index No. 17355 for sign details.

FOR LIMITED ACCESS HIGHWAYS

LAST REVISION	REVISION	DESCRIPTION:		FDOT DESIGN STANDARDS 2013	WELCOME CENTER SIGNING	INDEX NO.	SHEET NO.
07/01/07						17351	1

C:\d\projects\standards\roadway\17300-s\17351-01.dgn rd960rh 2:17:32 PM 6/28/2012

SIGN NO. FTP-15A-04

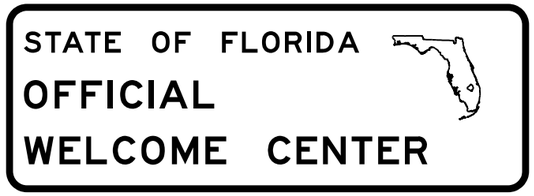

SIGN NO. FTP-12-04

SIGN NO. FTP-15B-04

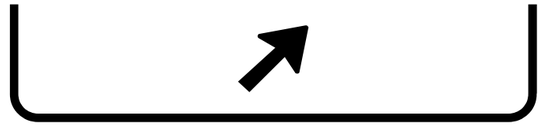

SIGN NO. FTP-15C-04

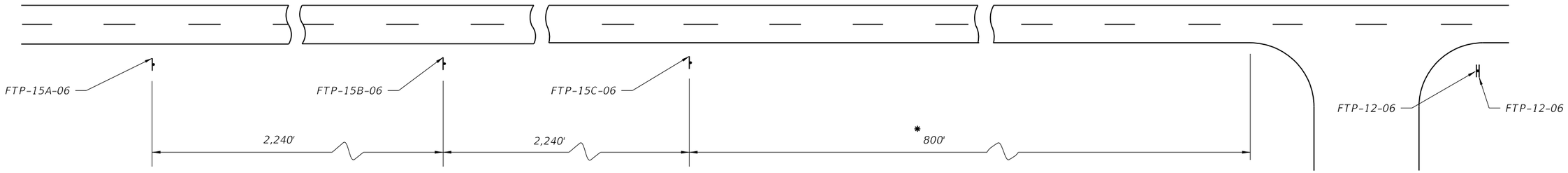

* 800' Maximum For Rural Conditions
50' Minimum For Rural Conditions

Notes:

1. Signs and sign structures shall be erected in accordance with the details shown on Index 11200.
2. Sign FTP-12-06 shall be located on the Welcome Center grounds in proximity to the building and as far from the Main Line Roadway as possible (2 signs back to back).
3. All legend to be Series E.
4. One sign FTP-15A-06 or 15B-06 should be used depending on speed, roadside development & geometric conditions.

FOR PRIMARY HIGHWAYS

LAST REVISION	REVISION	DESCRIPTION:				
07/01/07			FDOT DESIGN STANDARDS 2013	WELCOME CENTER SIGNING	INDEX NO. 17351	SHEET NO. 2

C:\d\projects\standards\roadway\17300-s\17351-02.dgn rd960rh 2:17:34 PM 6/28/2012

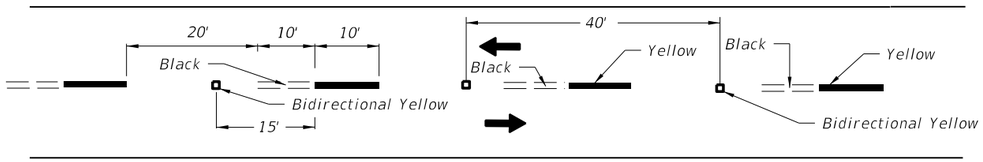

ALTERNATING SKIP LINE

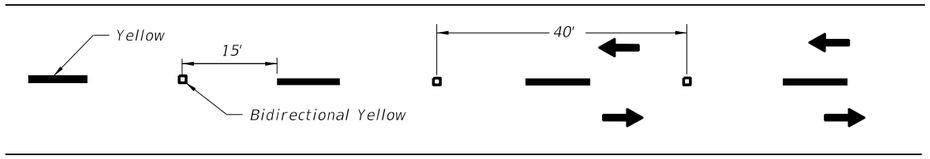

SKIP LINE

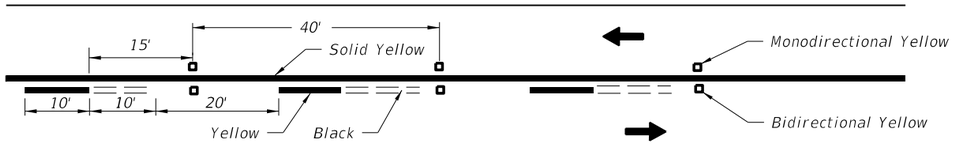

SOLID LINE WITH ALTERNATING SKIP

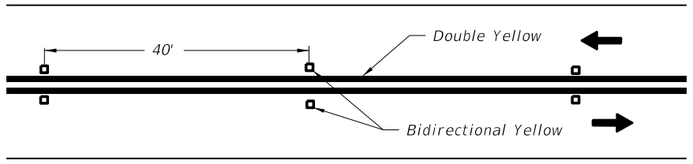

DOUBLE SOLID LINE

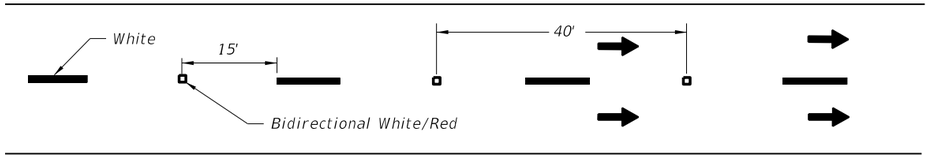

MULTILANE

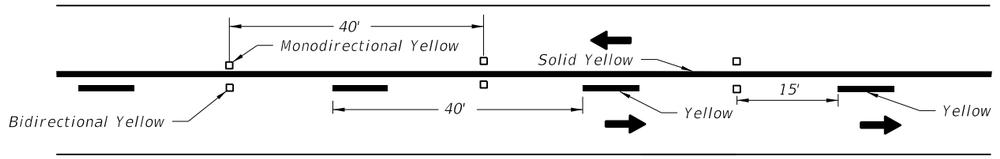

SOLID LINE WITH SKIP

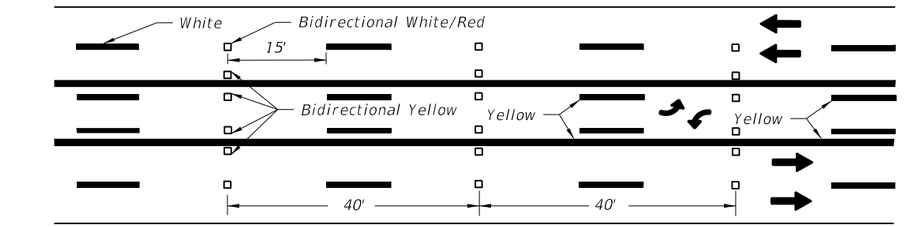

SKIP LINE WITH TWO-WAY LEFT TURN LANE

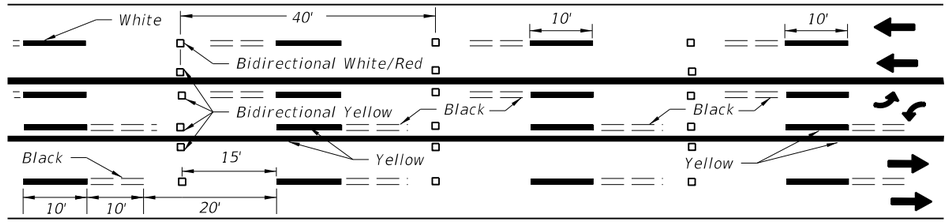

ALTERNATING SKIP LINE WITH TWO-WAY LEFT TURN LANE

1. Reflective Pavement Markers shall be spaced at 40' on all skip lane lines and skip center lines. This spacing may be reduced to 20' if specifically called for in the plans.
2. The spacing on solid lines and solid/skip combination lines shall be 40'.
3. All RPM's shall be offset 1" from solid longitudinal lines.
4. These spacings may be reduced for sharp curves if required.
5. All RPM's shall be class "B".

C:\d\projects\standards\roadway\17300-s\17352-01.dgn rd960rh 2:17:36 PM 6/28/2012

LAST REVISION	REVISION	DESCRIPTION:		FDOT DESIGN STANDARDS 2013	TYPICAL PLACEMENT OF REFLECTIVE PAVEMENT MARKERS	INDEX NO.	SHEET NO.
01/01/10						17352	1

NOTES

1. Raised pavement markers shall be set 1" from line.
2. Raised Pavement Markers shall be centered between chevrons or gore lines.

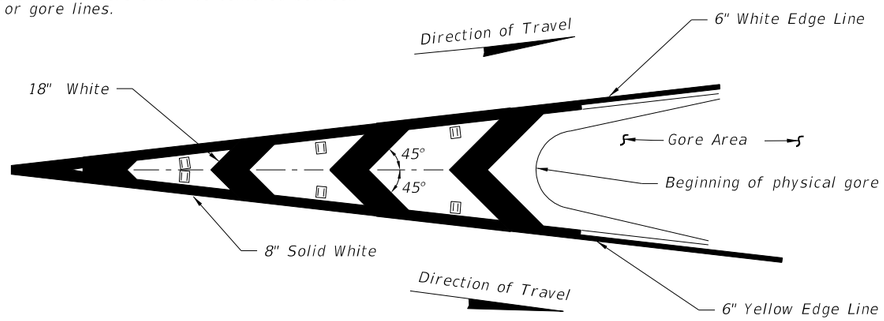

RPM PLACEMENT FOR TRAFFIC CHANNELIZATION AT GORE (TRAFFIC FLOWS IN SAME DIRECTION)

NOTE

Raised pavement markers (Bidirectional White/Red) should be used in all gores of this type

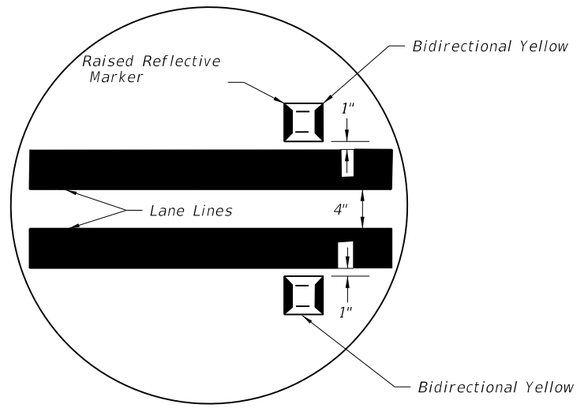

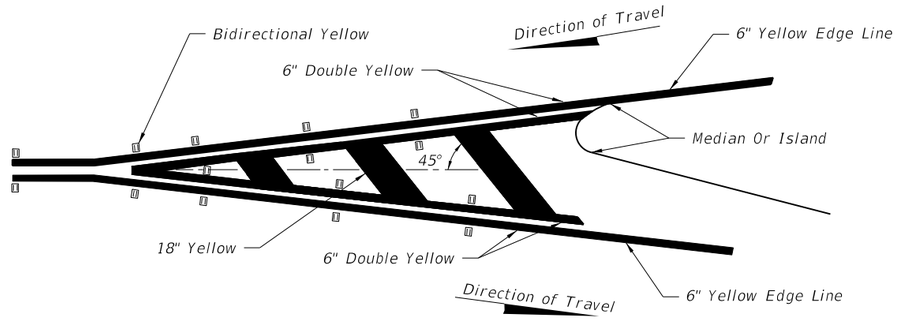

RPM PLACEMENT FOR TRAFFIC SEPARATION (TRAFFIC FLOWS IN OPPOSITE DIRECTION)

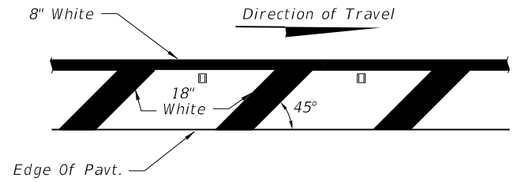

PLACEMENT OF RPM'S ON SHOULDER MARKINGS

For Left Side Of Roadway The Plan Is Opposite Hand And Markings Shall Be Yellow.

For Placement Of Rpm's On Ramps See Index 17345.

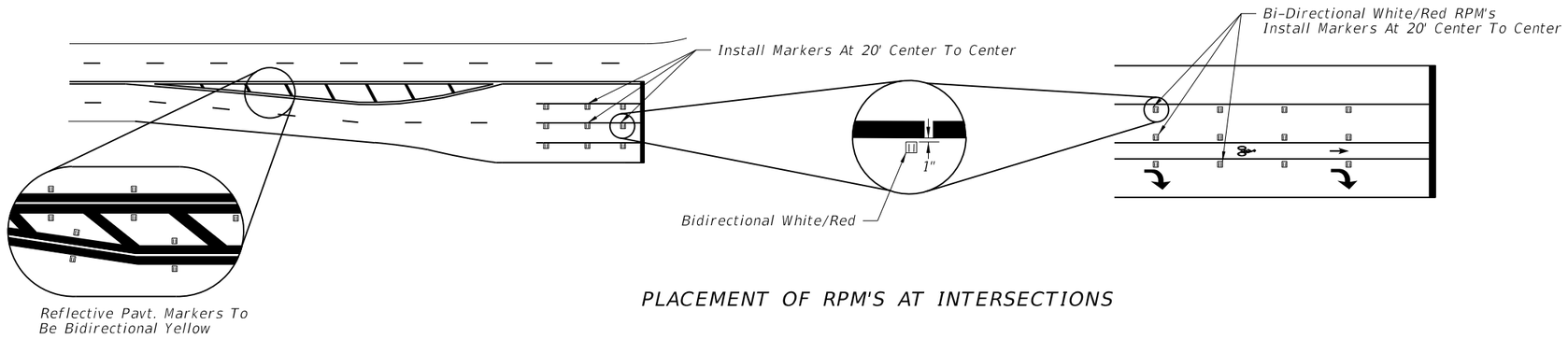

PLACEMENT OF RPM'S AT INTERSECTIONS

6/28/2012 2:17:38 PM rd960rh C:\d\projects\standards\roadway\17300-s\17352-02.dgn

LAST REVISION	REVISION	DESCRIPTION:				
01/01/10			FDOT DESIGN STANDARDS 2013	TYPICAL PLACEMENT OF REFLECTIVE PAVEMENT MARKERS	INDEX NO. 17352	SHEET NO. 2

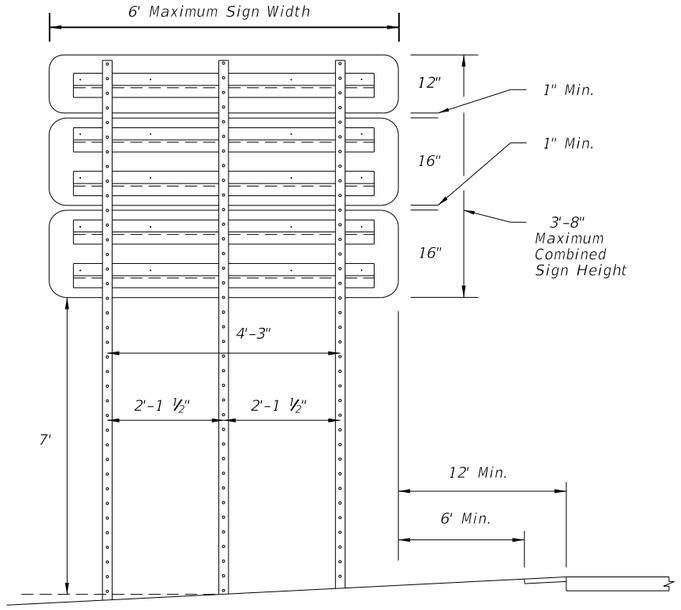

STEEL U-CHANNEL TRIPLE POST
DIRECT BURIAL

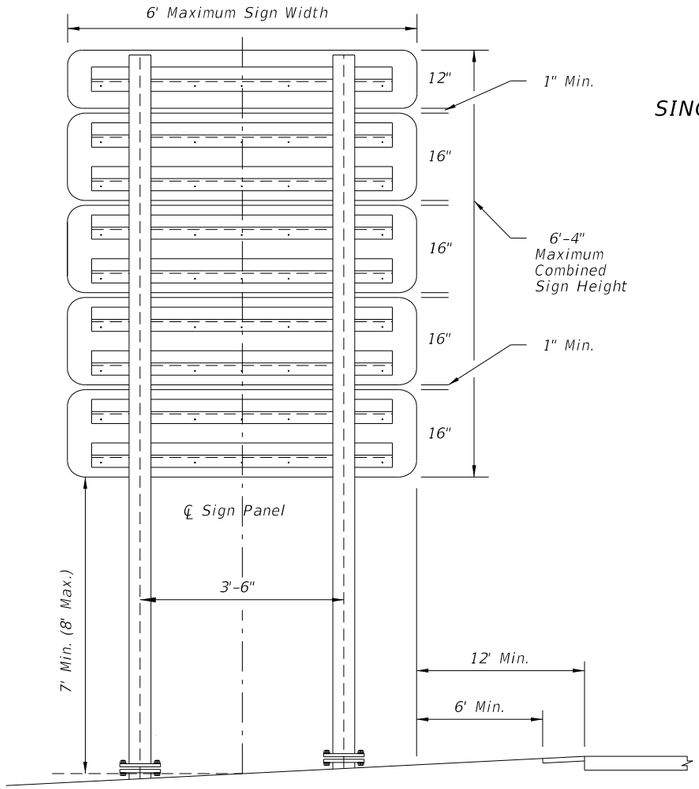

TWO POST STEEL I BEAM
WITH SLIP BASE

SINGLE POST SIGN EXAMPLES

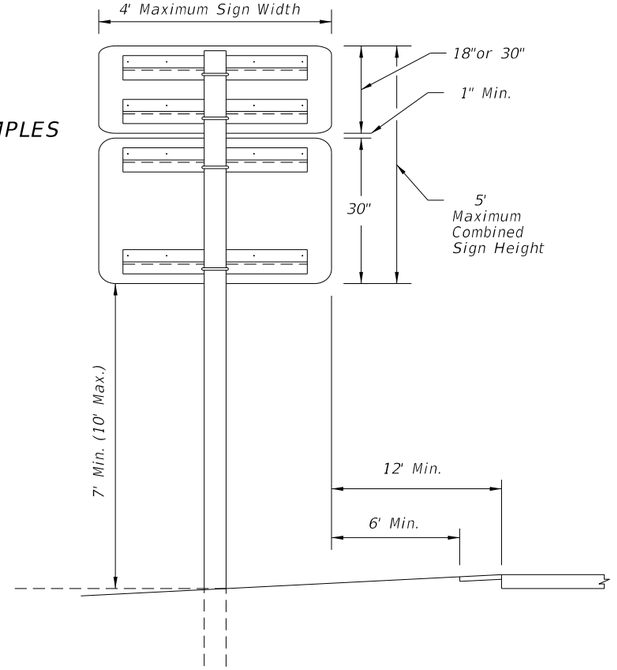

SINGLE POST
ALUMINUM
ROUND TUBE

MULTIPOST SIGN EXAMPLES

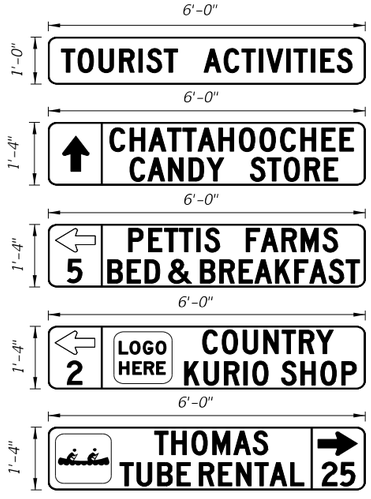

General Notes:

1. Signs Must Comply With Rule 14-51, Florida Administrative Code.
2. Text for Signs Shall Be 6" Type C Lettering.
3. For Aluminum Round Tube Assembly and Foundation Detail, see Index 11860.
4. For Steel I Beam Assembly and Foundation Detail, see Index 11200.
5. For Steel U-Channel Assembly and Foundation Detail, See Index 600 Sheet 6 of 12. Galvanize Steel U-Channel in accordance with ASTM 123.

DESIGN FOR TOURIST ORIENTED DIRECTIONAL SIGNS
(Options for Aluminum Round Tube, Steel I Beam and Steel U-Channel.)

No. of Signs (Total Area)	Single Post Configuration		Two Post Configuration		Three Post Configuration	
	3-1/2" X 0.125" Aluminum Tube Direct Burial	4" X 0.125" Aluminum Tube Slip Base	S3X5.7 Steel I Beam Slip Base	W6X12 Steel I Beam Slip Base	3 lb/ft Steel U-Channel Direct Burial	4 lb/ft Steel U-Channel Lap Splice
10	OK	OK	NA	NA	NA	NA
16-20	NA	OK	NA	NA	NA	NA
14-16	NA	NA	OK	OK	OK	OK
22-24	NA	NA	OK	OK	NA	OK *
30-32	NA	NA	NA	OK	NA	NA
38	NA	NA	NA	OK	NA	NA

* Limited to 22 s.f. Total Sign Area.

LAST REVISION	REVISION	DESCRIPTION:				
07/01/09			FDOT DESIGN STANDARDS 2013	TOURIST ORIENTED DIRECTIONAL SIGNS	INDEX NO. 17354	SHEET NO. 1

6/28/2012 2:17:40 PM rd960rh C:\d\projects\standards\roadway\17300-s\17354-01.dgn

FREEWAY USE

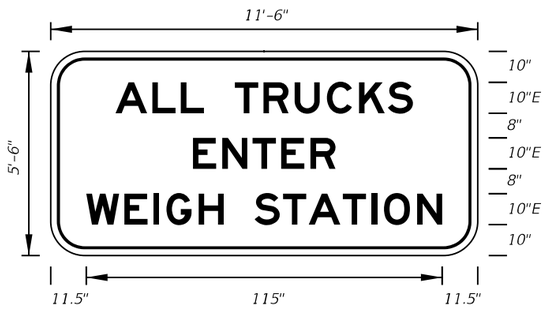

FTP-1-06
11'-6" X 5'-6"
9" Radii 2" Border
10" Series E Legend
White Background
Black Legend and Border

OTHER THAN FREEWAY USE

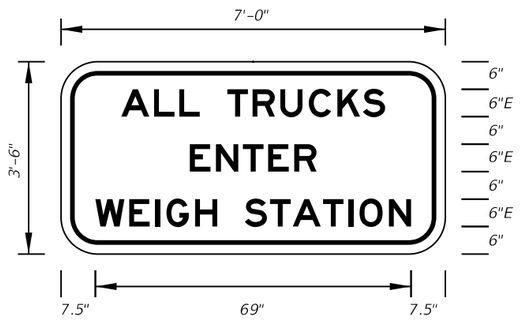

FTP-2-06
7' X 3'-6"
6" Radii 2" Border
6" Series E Legend
White Background
Black Legend and Border

OTHER THAN FREEWAY USE

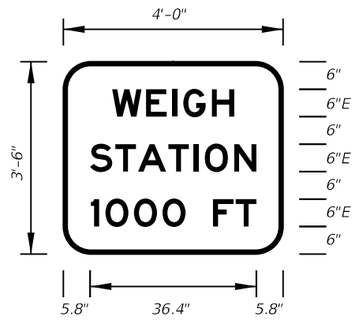

FTP-3-06
4' X 3'-6"
6" Radii 2" Border
6" Series E Legend
Green Background
White Legend and Border

OTHER THAN FREEWAY USE

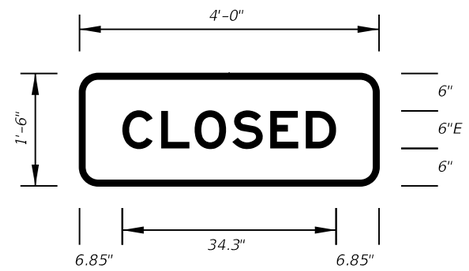

FTP-4-06
4' X 1'-6"
3" Radii 2" Border
6" Series E Legend
Green Background
White Legend and Border

Note:
FTP-4-06 to be
used with FTP-3-06

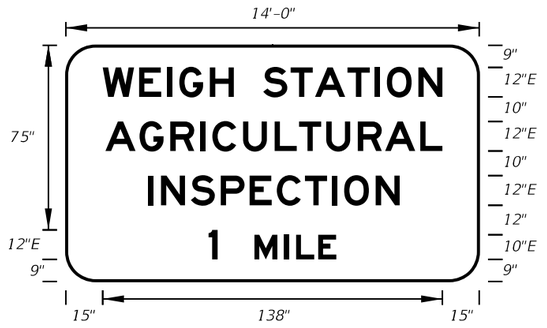

FTP-5-06
14' X 8'
12" Radii 2" Border
12" and 10" Series E Legend
Green Background
White Legend and Border

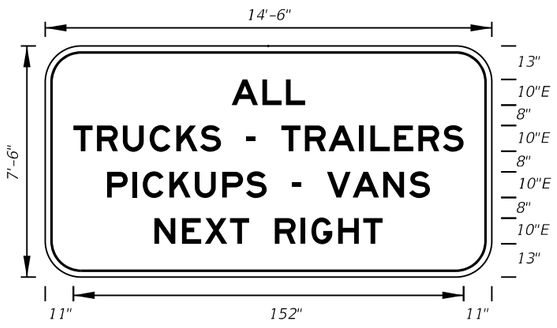

FTP-6A-06
14'-6" X 7'-6"
12" Radii 2" Border
10" Series E Legend
White Background
Black Legend and Border

On Interstate Station
Delete Pickups-Vans,
and reduce Sign height
accordingly.

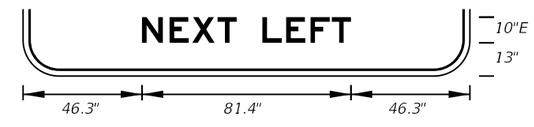

FTP-6B-06
14'-6" X 7'-6"
12" Radii 2" Border
10" Series E Legend
White Background
Black Legend and Border

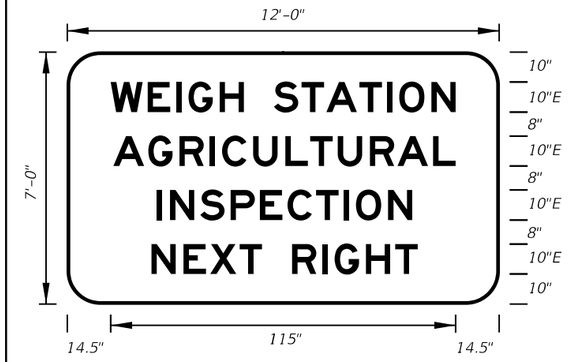

FTP-7A-06
12' X 7'
11" Radii 2" Border
10" Series E Legend
Green Background
White Legend and Border

FTP-7B-06
12' X 7'
11" Radii 2" Border
10" Series E Legend
Green Background
White Legend and Border

FREEWAY USE

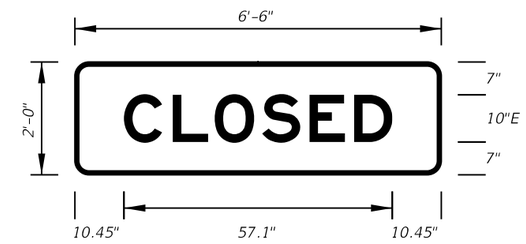

FTP-8-06
6'-6"X 2'
3" Radii 2" Border
10" Series E Legend
Green Background
White Legend and Border

Note:
FTP-8-06 to be
used with FTP-7A-06
& FTP-7B-06.

FTP-9B-06-LEFT ARROW

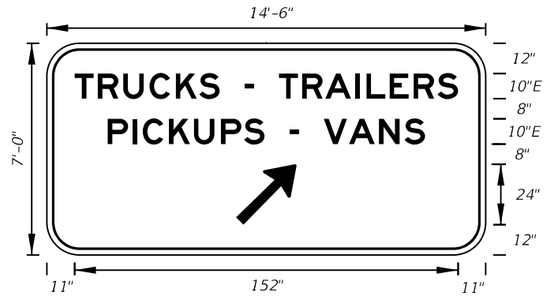

FTP-9A-06
14'-6" X 7'
11" Radii 2" Border

10" Series E Legend
Green Background
White Legend and Border

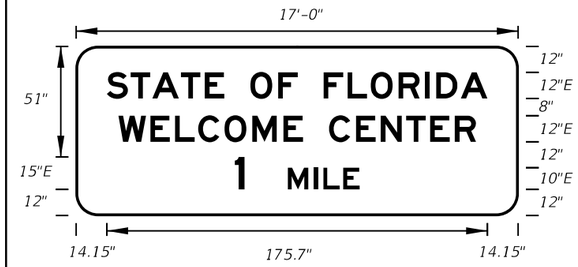

FTP-10-06
17' X 6'-6"
10" Radii 2" Border

12", 10" and 15" Series E Legend
Blue Background
White Legend and Border

LAST REVISION	REVISION	DESCRIPTION:			INDEX NO.	SHEET NO.
07/01/09			FDOT DESIGN STANDARDS 2013	SPECIAL SIGN DETAILS	17355	1

C:\d\projects\standards\roadway\17300-s\17355-01.dgn
rd960rh
2:17:42 PM
6/28/2012

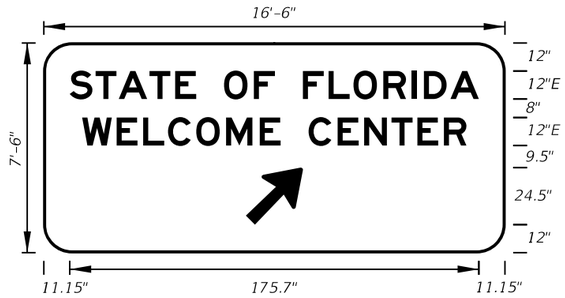

FTP-11-06
16'-6" X 7'-6"
12" Radii 2" Border
12" Series E Legend
Blue Background
White Legend and Border

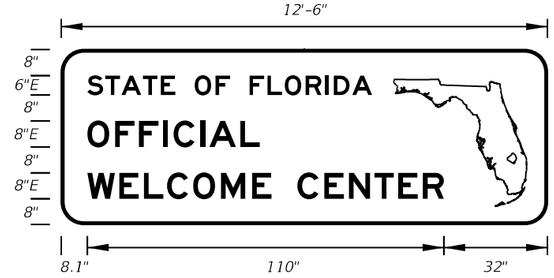

FTP-12-06
12'-6" X 4'-6"
7" Radii 2" Border
6" and 8" Series E Legend
Blue Background
White Legend and Border

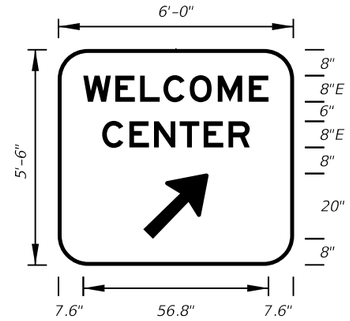

FTP-13-06
6' 0" X 5'-6"
9" Radii 2" Border
8" Series E Legend
Blue Background
White Legend and Border

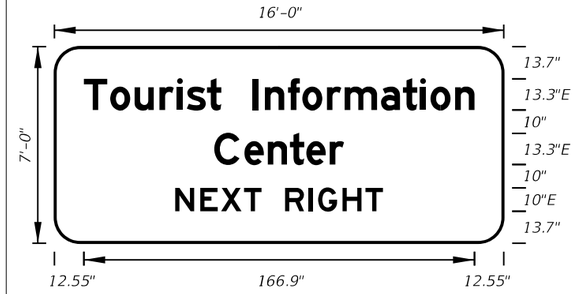

FTP-14-06
16'-0" X 7'-0"
11" Radii 2" Border
13.3 and 10" Series E Legend
Blue Background
White Legend and Border

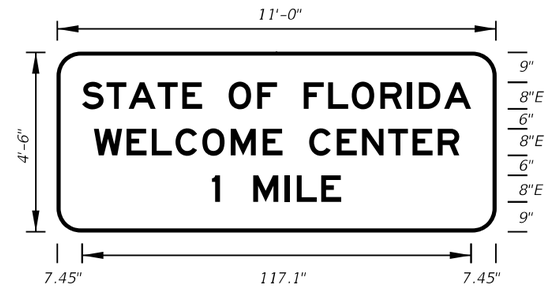

FTP-15A-06
11'-0" X 4'-6"
7" Radii 2" Border
8" Series E Legend
Blue Background
White Legend and Border

FTP-15B-06
11'-0" X 5'-0"
8" Radii 2" Border
8" and 12" Series E Legend
Blue Background
White Legend and Border

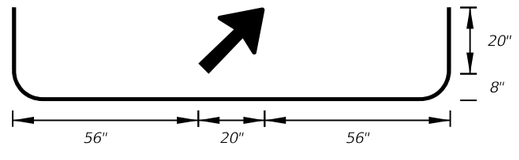

FTP-15C-06
11'-0" X 5'-6"
9" Radii 2" Border
8" Series E Legend
Blue Background
White Legend and Border

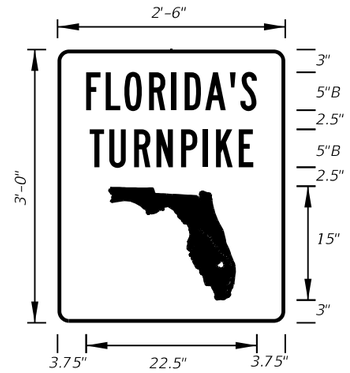

FTP-16-10
2'-6" X 3'-0"
1.5" Radii 3/4" Border
5" Series B Legend
Green Background
White Legend, Border, and Florida Symbol

FTP-19-06
1' X 1'-6"
4" Radii 3/8" Border
Top 4" Series D
Bottom 2" Series C
White Background
Green Legend and Border

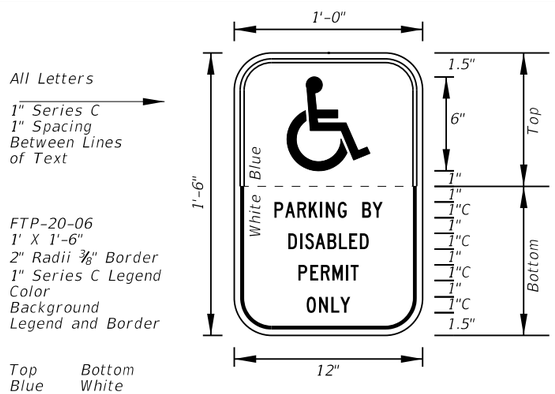

FTP-20-06
1' X 1'-6"
2" Radii 3/8" Border
1" Series C Legend
Color
Background
Legend and Border

Top	Bottom
Blue	White
White	Black

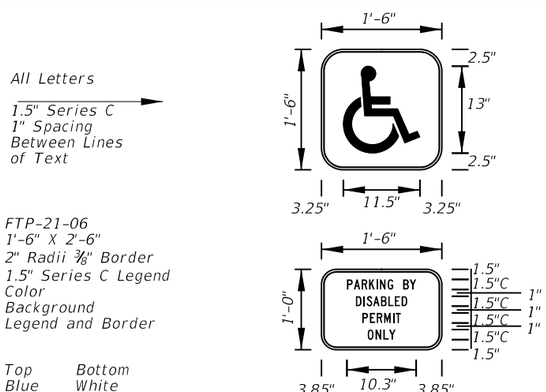

FTP-21-06
1'-6" X 2'-6"
2" Radii 3/8" Border
1.5" Series C Legend
Color
Background
Legend and Border

Top	Bottom
Blue	White
White	Black

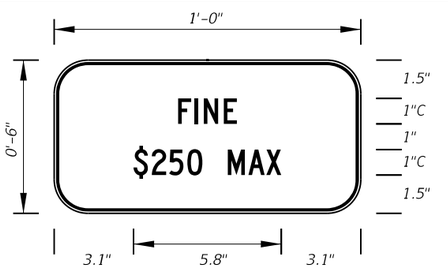

FTP-22-06
1' X 6"
1" Radii 3/8" Border
1" Series C Legend
White Background
Black Legend and Border

Supplemental Panel
for the FTP-20-06
and FTP-21-06 signs

LAST REVISION	REVISION	DESCRIPTION:			INDEX NO.	SHEET NO.
01/01/12			FDOT DESIGN STANDARDS 2013	SPECIAL SIGN DETAILS	17355	2

6/28/2012 2:17:44 PM rd960rh C:\d\projects\standards\roadway\17300-s\17355-02.dgn

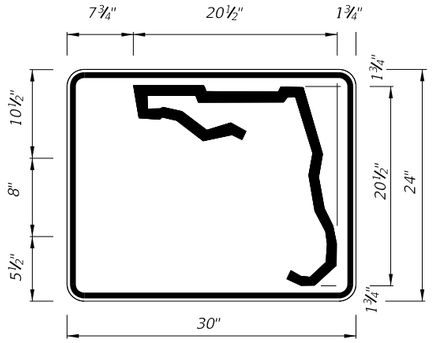

3 or 4 DIGITS

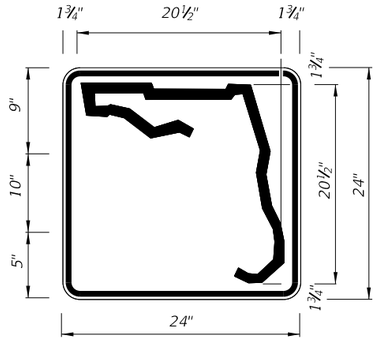

1 or 2 DIGITS

DIGITS	NUMERAL SIZE	SERIES	PANEL SIZE
1–2	10"	D	24" x 24"
3–4	8"	D	24" x 24"
3	8"	C	30" x 24"
4	8"	C	30" x 24"

Note:
The 24" X 24" panel shall only be used for a 3 or 4 digit route when the panel is to be used on a sign cluster with other 24" X 24" panels.

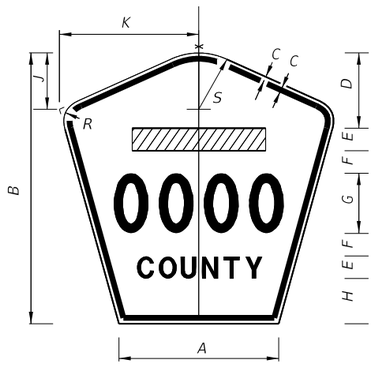

Notes :
1. All Legend Series "D".
2. Color: Yellow Legend and Border on Blue Background.
3. When used on a guide sign, marker must be overlaid on a rectangular Yellow Background as shown in chart. **

SIGN	DIMENSIONS												**
	A	B	C	D	E	F	G	H	J	K	R	S	
4 DIGIT POST MOUNTED	25⅛"	42"	¾"	10"	4"	4"	8"	8"	8⅜"	22"	5"	8¾"	
2 DIGIT OVERHEAD	21½"	36"	½"	7½"	3"	3"	12"	4½"	7⅛"	18⅞"	4¼"	7½"	42"x 42"
3 DIGIT OVERHEAD	25⅛"	42"	¾"	8"	4"	4"	12"	6"	8⅜"	22"	5"	8¾"	48"x 48"
4 DIGIT OVERHEAD	29⅞"	48"	¾"	8"	5"	5"	12"	8"	9¾"	25⅝"	5¾"	10¼"	52"x 52"

M1-6 COUNTY ROUTE MARKER DETAIL
FTP-18-06

INDEPENDENT USE OTHER THAN FREEWAY

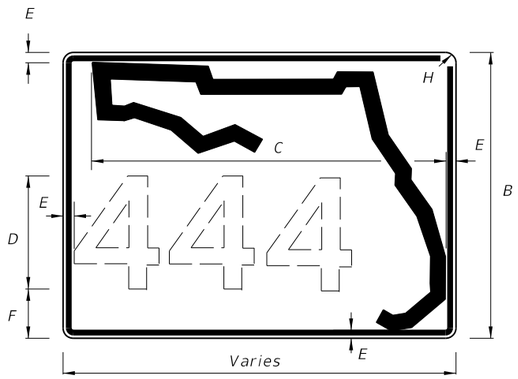

3 OR MORE DIGITS

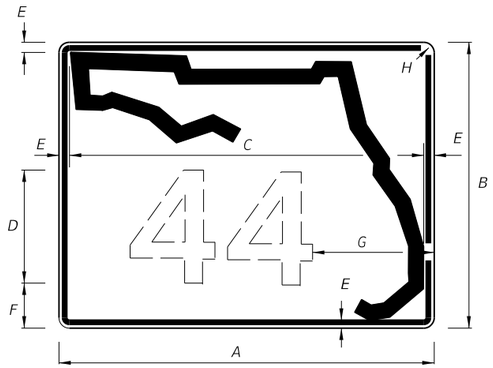

1 OR 2 DIGITS

A	B	C	D	E	F	G	H
30"	24"	26"	12"	1¼"	2¾"	8¼"	1¼"
36"	30"	32"	15"	1¼"	3¼"	8¾"	1¼"
42"	36"	38"	15"	1¼"	6¼"	11"	1¼"

GUIDE SIGN USE

Notes:
1. Florida marker shall have Black Legend with White Background.
2. Stroke width of State outline to be 1" for independent use and 1¼" for Guide Sign.
3. Numbers are series D.

FLORIDA ROUTE MARKER
FTP-17-06

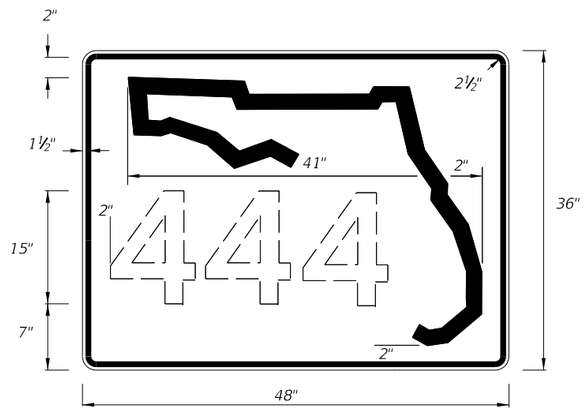

1-3 DIGITS 15" SERIES C
4 DIGITS 12" SERIES C

INDEPENDENT USE FOR FREEWAY

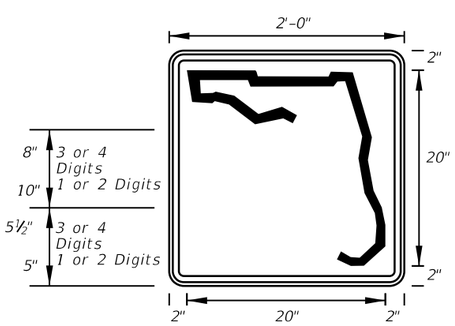

FTP-17-06
2' X 2'
1.13" Radii .0521" Border
White Background
Black Legend and Border

C:\d\projects\standards\roadway\17300-s\17355-03.dgn rd960rh 2:17:46 PM 6/28/2012

LAST REVISION	REVISION	DESCRIPTION:				
01/01/12			FDOT DESIGN STANDARDS 2013	SPECIAL SIGN DETAILS	INDEX NO. 17355	SHEET NO. 3

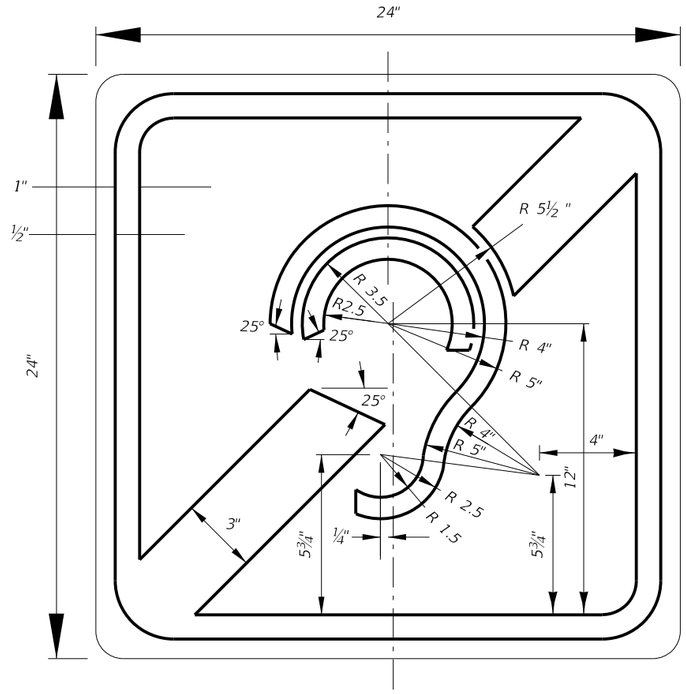

FTP-23-06
2' X 2'
1.5" Radii ⅝" Border
Blue Background
White Legend and Border

INTERNATIONAL SYMBOL OF ACCESS FOR HEARING LOSS

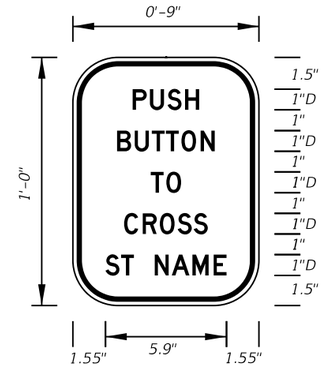

FTP-25-06
9" X 1'-0"
2" Radii ⅜" Border
1" Series D Legend
White Background
Black Legend and Border

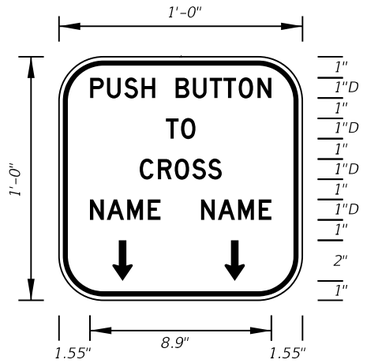

FTP-26-06
1' X 1'
2" Radii ⅜" Border
1" Series D Legend
White Background
Black Legend and Border

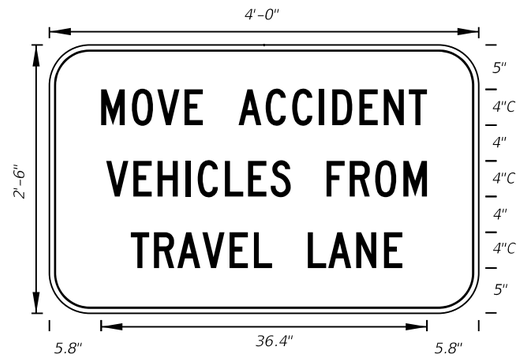

FTP-27-06
4' X 2'-6"
4" Radii ¾" Border
4" Series C Legend
White Background
Black Legend and Border

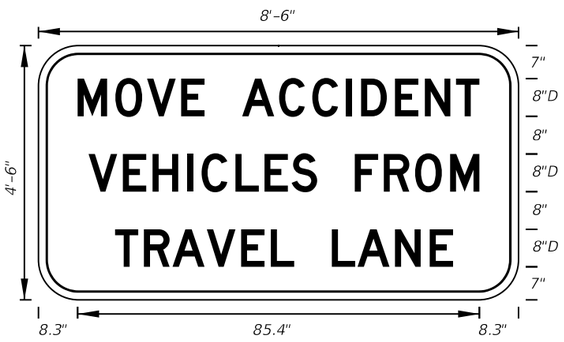

FTP-28-06
8'-6" X 4'-6"
7" Radii ¾" Border
8" Series D Legend
White Background
Black Legend and Border

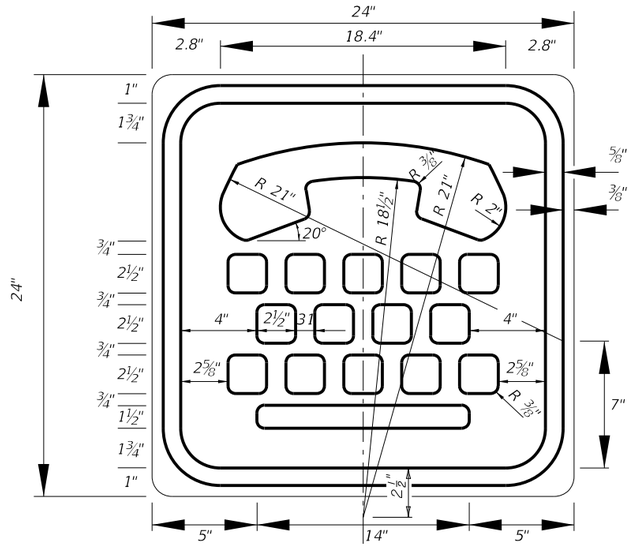

FTP-24-06
2' X 2'
1.5" Radii ⅝" Border
Blue Background
White Legend and Border

INTERNATIONAL TDD SYMBOL

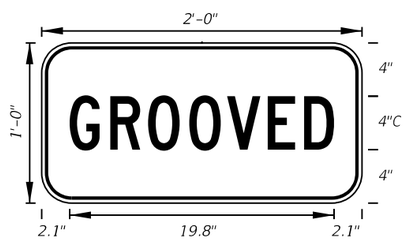

FTP-29-06
2'-0" X 1'-0"
2" Radii ⅜" Border
4" Series C Legend
Yellow Background
Black Legend and Border

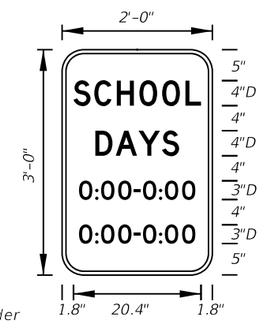

FTP-30-06
2'-0" X 3'-0"
3" Radii ⅝" Border
White Background
Black Legend and Border

Top 4" Series D Legend
Bottom 3" Series C Legend

C:\d\projects\standards\roadway\17300-s\17355-04.dgn rd960rh 2:17:48 PM 6/28/2012

LAST REVISION	REVISION	DESCRIPTION:				
01/01/12			FDOT DESIGN STANDARDS 2013	SPECIAL SIGN DETAILS	INDEX NO. 17355	SHEET NO. 4

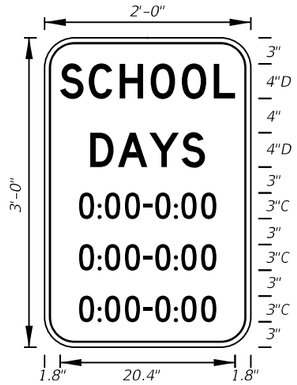

FTP-30A-06
2' X 3'
3" Radii 5/8" Border
Top 4" Series D Legend
Bottom 3" Series C Legend
White Background
Black Legend and Border

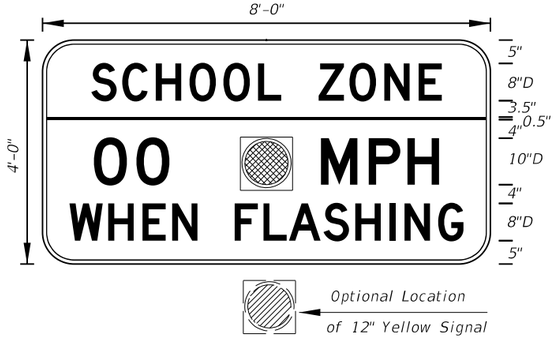

FTP-31-06
8' X 4'
6" Radii 3/4" Border
Series D Legend
Yellow Background Top
White Background Bottom
Black Legend and Border

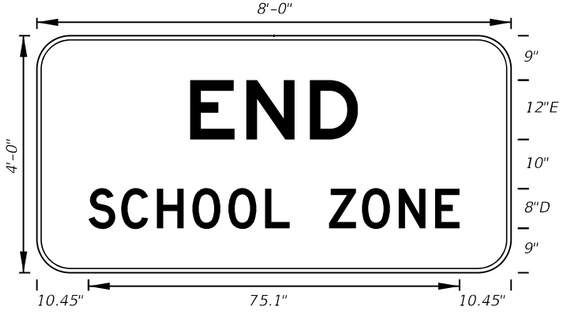

FTP-32-06
8' X 4'
6" Radii 3/4" Border
12" Series E and 8" Series D Legend
White Background
Black Legend and Border

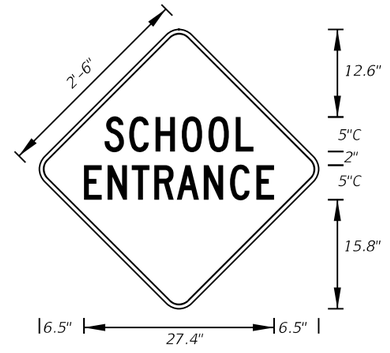

FTP-33-06
2'-6" X 2'-6"
2" Radii 3/4" Border
5" Series C Legend
Yellow Background
Black Legend and Border

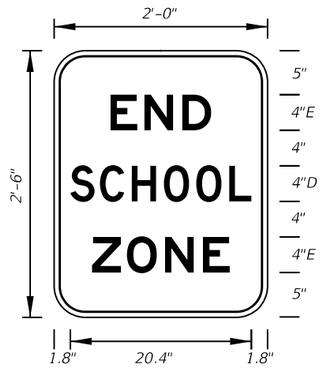

FTP-34-06
2' X 2'-6"
3" Radii 5/8" Border
4"Series D and E Legend
White Background
Black Legend and Border

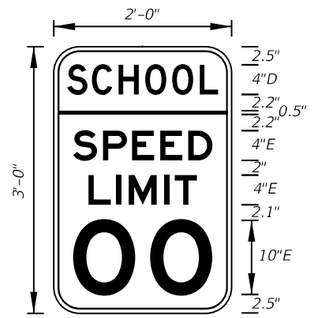

FTP-35-06
2' X 3'
3" Radii 5/8" Border
Top 4" Series D Legend
Bottom 4" and 10" Series E Legend
Yellow Background Top White Background Bottom
Black Legend and Border

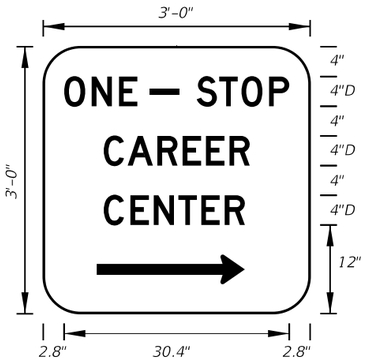

FTP-36-06
3' X 3'
5" Radii
4" Series D Legend
Green Background
White Legend and Border

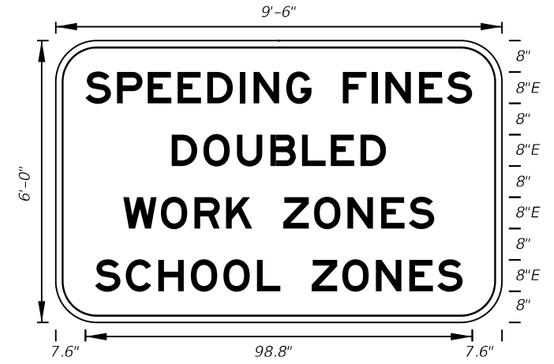

FTP-37-06
9'-6"X 6'
9" Radii 2" Border
8" Series E Legend
White Background
Black Legend and Border

State Line Sign

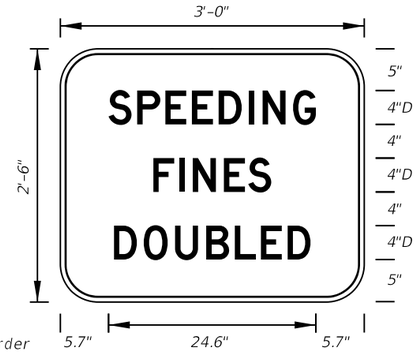

FTP-38-06
3' X 2'-6"
4" Radii 3/4" Border
4" Series D Legend
White Background
Black Legend and Border

Arterial Sign

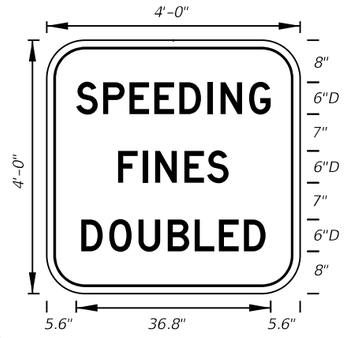

FTP-39-06
4' X 4'
6" Radii 3/4" Border
6" Series D Legend
White Background
Black Legend and Border

Freeway Sign

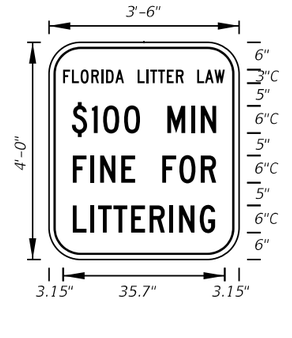

FTP-40-06
3'-6" X 4'
6" Radii 3/4" Border

3" and 6" Series C Legend
White Background
Black Legend and Border

FTP-41-06
2'-6"X 3'
4" Radii 3/4" Border

2" and 4" Series C Legend
White Background
Black Legend and Border

LAST REVISION	REVISION	DESCRIPTION:			INDEX NO.	SHEET NO.
01/01/12			FDOT DESIGN STANDARDS 2013	SPECIAL SIGN DETAILS	17355	5

6/28/2012 2:17:50 PM rd960rh C:\d\projects\standards\roadway\17300-s\17355-05.dgn

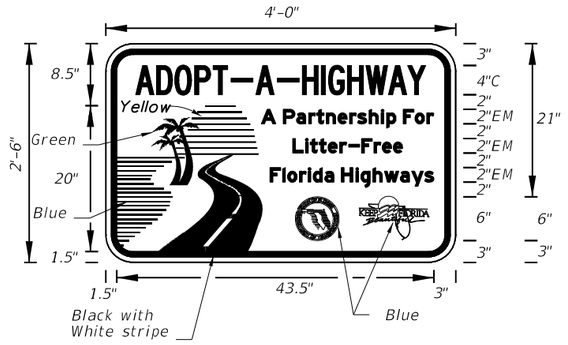

FTP-42-06
4'X 2'-6"
3" Radii
Top 4" Series C Legend
Bottom 2" Series EM Legend
White Background
Blue Legend and Border

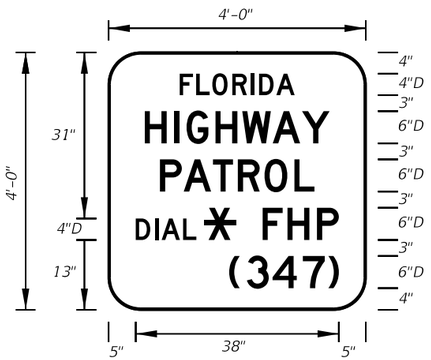

FTP-43-06
4' X 4'
6" Radii 1" Border
Top 4" Series D Legend
Bottom 6" Series D Legend
Blue Background
White Legend and Border

FTP-44-06
9' X 6'
9" Radii ¾" Border
8" Series D Legend
White Background
Black Legend and Border

FTP-45-06
4' X 3'
5" Radii ¾" Border
4" Series C Legend
White Background
Black Legend and Border

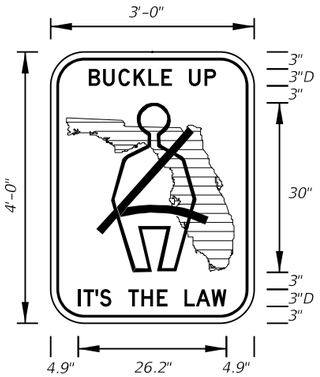

FTP-46-06
3' X 4'
5" Radii ¾" Border
3" Series D Legend
White Background Florida Sheild Green
Black Legend, Border and Man Belt Symbol

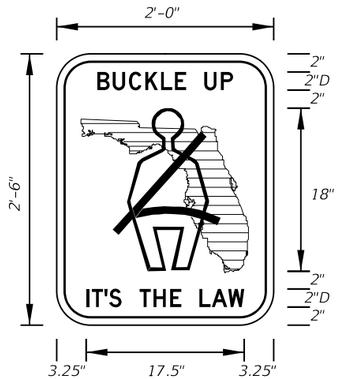

FTP-47-06
2' X 2'-6"
3" Radii ⅝" Border
2" Series D Legend
White Background Florida Shield Green
Black Legend, Border and Man Belt Symbol

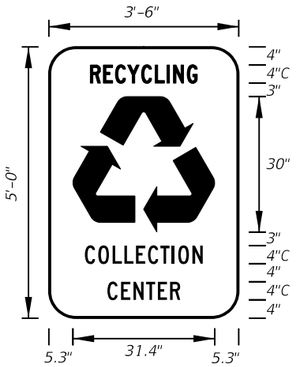

FTP-48-06
3'-6" X 5'
6" Radii
4" Series C Legend
Green Background
White Legend, Border and Symbol

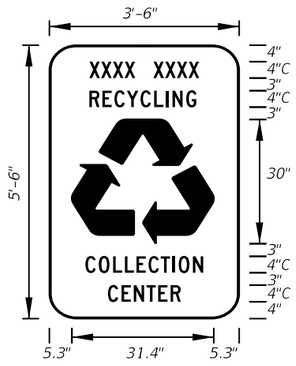

FTP-49-06
3'-6" X 5'-6"
6" Radii
4" Series C Legend
Green Background Municipality Name Optional
White Legend, Border and Symbol

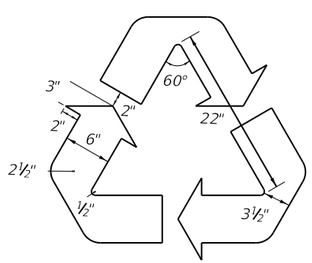

Detail for FTP-48-06 and FTP-49-06

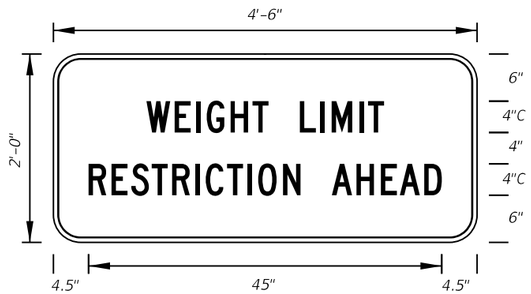

FTP-50-06
4'-6" X 2'
3" Radii ¾" Border
4" Series C Legend
Yellow Background
Black Legend and Border

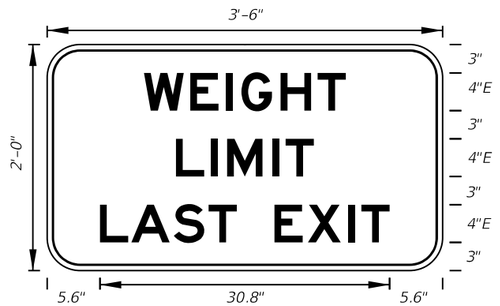

FTP-51-06
3' X 2'
3" Radii ¾" Border

4" Series E Legend
White Background
Black Legend and Border

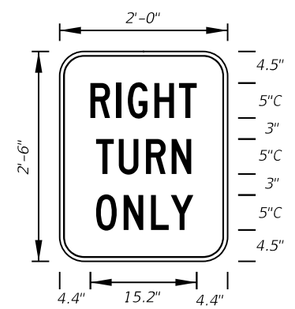

FTP-52-06
2' X 2'-6"
3" Radii ⅝" Border

5" Series C Legend
White Background
Black Legend and Border

LAST REVISION	REVISION	DESCRIPTION:		INDEX NO.	SHEET NO.
07/01/01			FDOT DESIGN STANDARDS 2013	17355	6

SPECIAL SIGN DETAILS

6/28/2012 2:17:53 PM rd960rh C:\d\projects\standards\roadway\17300-s\17355-06.dgn

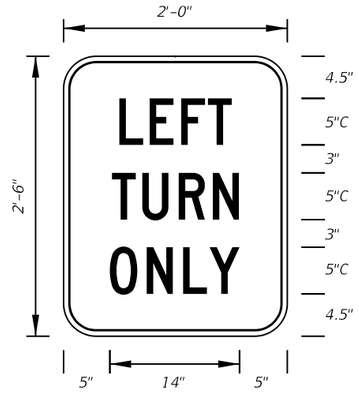

FTP-53-06
2' X 2'-6"
3" Radii 5/8" Border
5" Series C Legend
White Background
Black Legend and Border

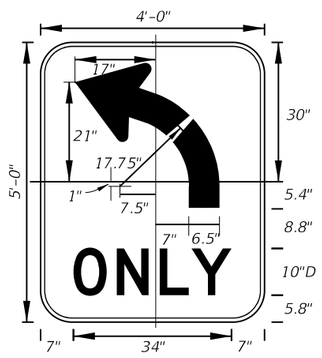

FTP-54L-06
4' X 5'
6" Radii 3/4" Border
10" Series D Legend
White Background
Black Legend and Border

FTP-54R-06 for
(Right Turn Arrow)

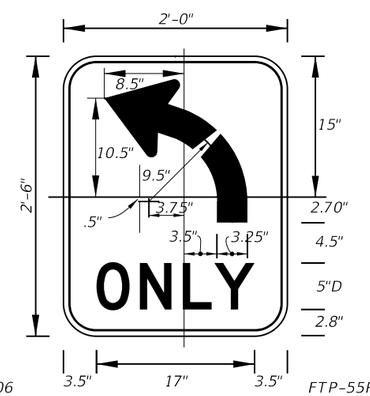

FTP-55L-06
2' X 2'-6"
3" Radii 5/8" Border
5" Series D Legend
White Background
Black Legend and Border

FTP-55R-06 for
(Right Turn Arrow)

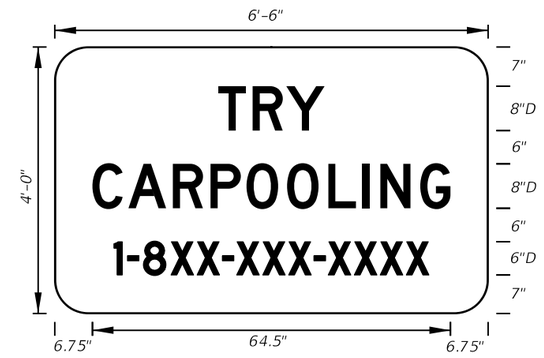

FTP-56-06
6'-6"X 4'
6" Radii 3/4" Border
8" and 6" Series D Legend
Blue Background
White Legend and Border

Design Project Manager
or Transit Administrator
will supply correct 1-8XX
number.

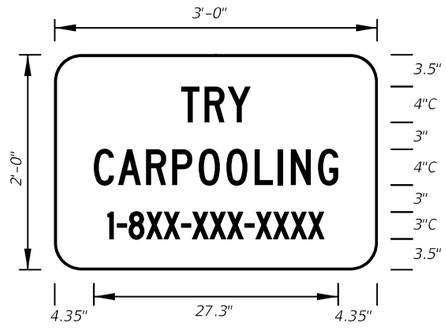

FTP-56A-06
3' X 2'
3" Radii
4" and 3" Series C Legend
Blue Background
White Legend and Border

Design Project Manager
or Transit Administrator
will supply correct 1-8XX
number.

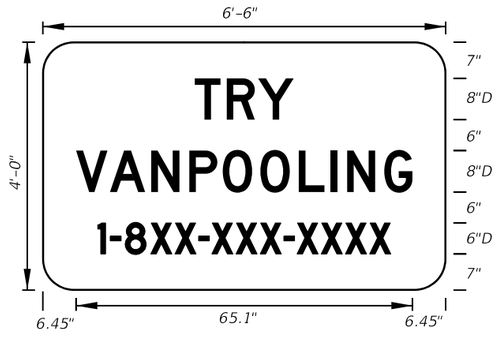

FTP-57-06
6'-6" X 4'
6" Radii
8"and 6" Series D Legend
Blue Background
White Legend and Border

Design Project Manager
or Transit Administrator
will supply correct 1-8XX
number.

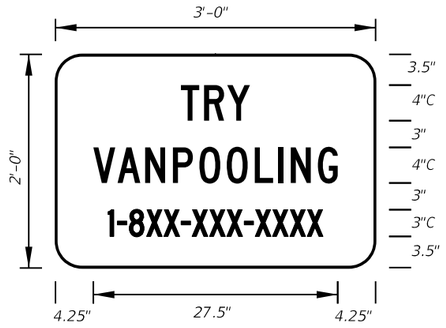

FTP-58-06
3' X 2'
3" Radii
4" and 3" Series C Legend
Blue Background
White Legend and Border

Design Project Manager
or Transit Administrator
will supply correct 1-8XX
number.

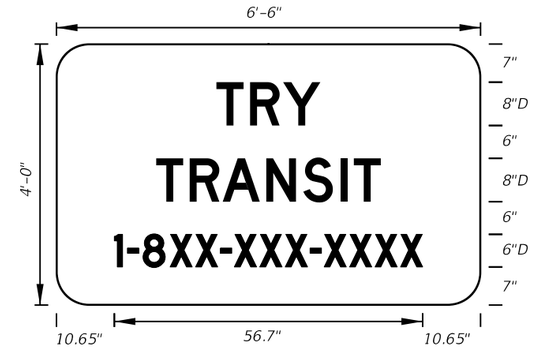

FTP-59-06
6'-6" X 4'
6" Radii
8" and 6" Series D Legend
Blue Background
White Legend and Border

Design Project Manager
or Transit Administrator
will supply correct 1-8XX
number.

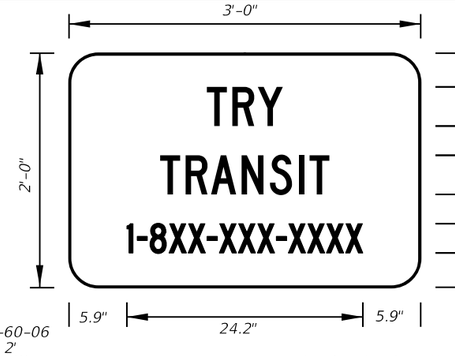

FTP-60-06
3' X 2'
3" Radii
4"and 3" Series C Legend
Blue Background
White Legend and Border

Design Project Manager
or Transit Administrator
will supply correct 1-8XX
number.

FTP-61-06
3' X 2'
3" Radii 3/4" Border
4" and 3" Series C Legend
Yellow Background
Black Legend and Border

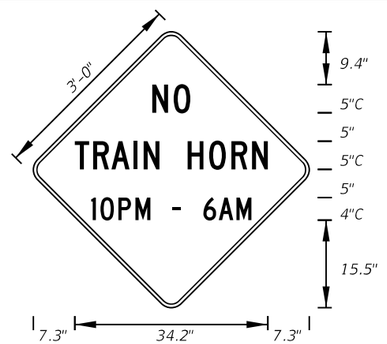

FTP-62-06
3' X 3'
2" Radii 3/4" Border 4"and 5" Series C Legend
Yellow Background Black Legend and Border

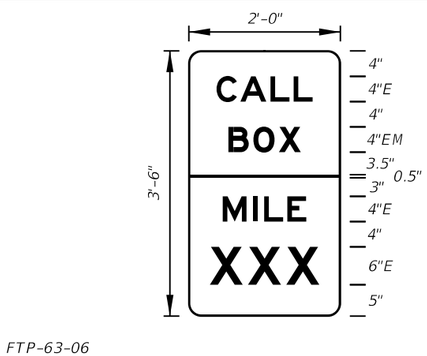

FTP-63-06
2' X 3'-6"
2" Radii 4"and 6" Series E and EM Legend
Top Blue Background White Legend and Border
Bottom Green Background White Legend and Border

C:\d\projects\standards\roadway\17300-s\17355-07.dgn rd960rh 2:17:55 PM 6/28/2012

LAST REVISION	REVISION	DESCRIPTION:				
07/01/09			FDOT DESIGN STANDARDS 2013	SPECIAL SIGN DETAILS	INDEX NO. 17355	SHEET NO. 7

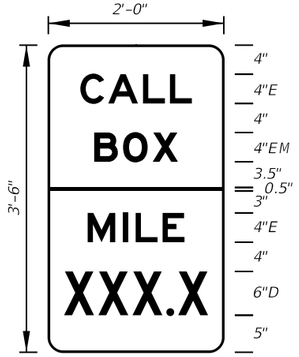

FTP-64-06
2' X 3'-6"
2" Radii
Top 4" Series E and 4" Series EM Legend
Blue Background White Legend and Border
Bottom 4" Series E and 6" Series D Legend
Green Background White Legend and Border

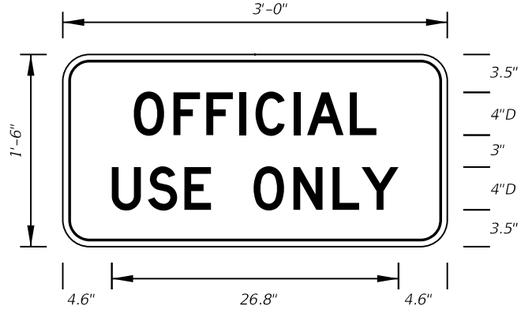

FTP-65-06
3' X 1'-6"
2" Radii ¾" Border
4" Series D Legend
White Background
Black Legend and Border

FTP-66-06
4'X 5'
2" Radii ¾" Border
7" Series D Legend
Blue Background
White Legend and Border

FTP-67-06
3' X 4'
2" Radii ¾" Border
5" Series D Legend
Blue Background
White Legend and Border

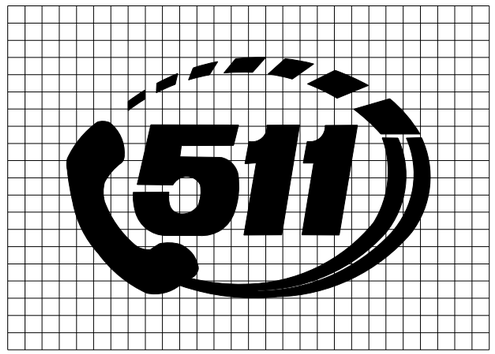

DETAIL for FTP-66 AND FTP-67

Sign Mounting Holes Can Be Punched Or Field Drilled With No Obstruction To Text Or Symbols From Holes Or Bolts.

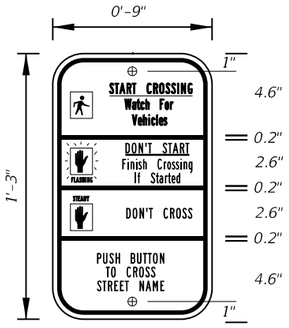

FTP-68A-06
9" X 1'-3"
1.5" Radii ¾" Border
Series B Legend
White Background
Black Legend and Border

See Standard Highway Signs Manual, Sign R10-3b For Letter Size Spacing And Symbol Sizes.

Sign Mounting Holes Can Be Punched Or Field Drilled With No Obstruction To Text Or Symbols From Holes Or Bolts.

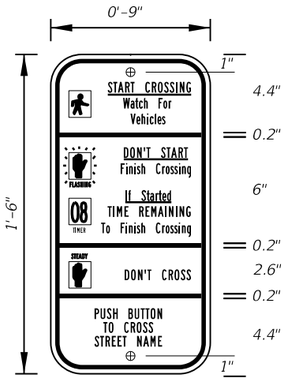

FTP-68B-06
9" X 1'-6"
1.5" Radii ¾" Border
Series B Legend
White Background
Black Legend and Border

See Standard Highway Signs Manual, Sign R10-3b For Letter Size Spacing And Symbol Sizes.

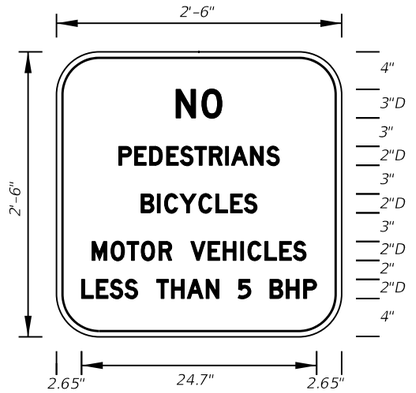

FTP-69-06
2'-6" X 2'-6"
4" Radii ¾" Border
2" and 3" Series D Legend
White Background
Black Legend and Border

FTP-70-06
3'-6" X 2'-6"
2.25" Radii ¾" Border
5" Series C and 7" Series C Legend
Blue Background
White Legend and Border

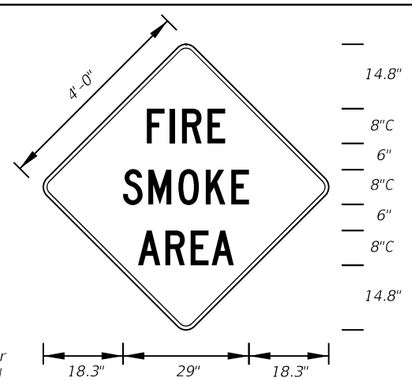

FTP-71-06
4' X 4'
2" Radii ¾" Border
8" Series C Legend
Yellow Background
Black Legend and Border

FTP-72-06
3' X 3'
2" Radii ¾" Border

6" Series C Legend
Yellow Background
Black Legend and Border

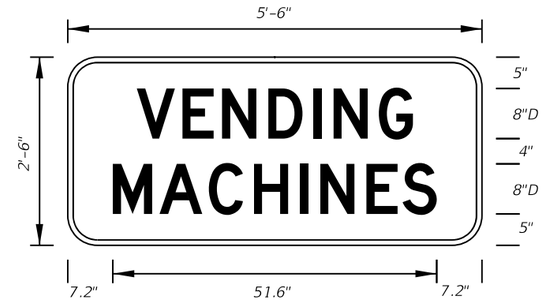

FTP-73-06
5'-6" X 2'-6"
4" Radii ¾" Border

8" Series D Legend
Blue Background
White Legend and Border

C:\d\projects\standards\roadway\17300-s\17355-08.dgn
rd960rh
2:17:57 PM
6/28/2012

LAST REVISION	REVISION	DESCRIPTION:			INDEX NO.	SHEET NO.
01/01/10			FDOT DESIGN STANDARDS 2013	SPECIAL SIGN DETAILS	17355	8

FTP-74-06
5'-6" X 2'-6"
4" Radii ¾" Border
6" Series D Legend
Blue Background
White Legend and Border

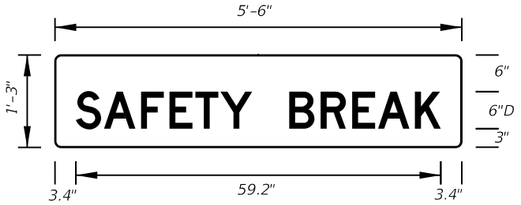

FTP-75-06
5'-6" X 1'-3"
1" Radii
6" Series D Legend
Blue Background
White Legend

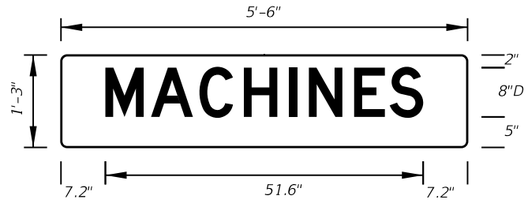

FTP-76-06
5'-6" X 1'-3"
1" Radii
8" Series D Legend
Blue Background
White Legend

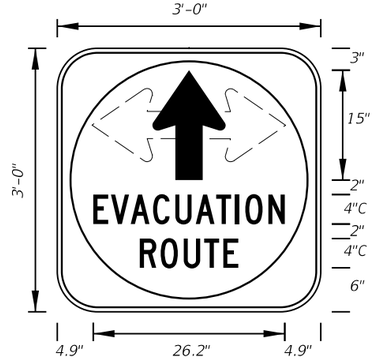

FTP-77-06
3' X 3'
5" Radii ¾" Border
4" Series C Legend
White Background with Blue Circle Background
White Legend and Black Border

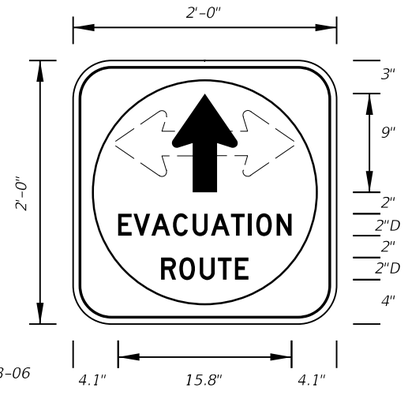

FTP-78-06
2' X 2'
3" Radii ¾" Border
2" Series D Legend
White Background with Blue Circle Background
White Legend and Black Border

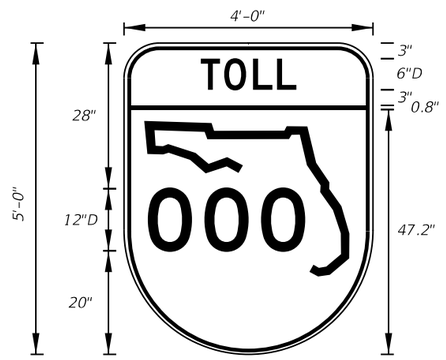

FTP-79-06
4' X 5'
6" Radii ¾" Border
6" and 12" Series D Legend
Top Yellow Background with White Legend and Black Border
Bottom White Background with Black Legend and Border

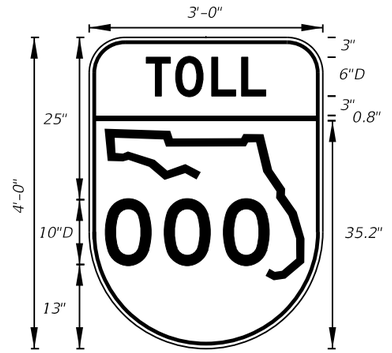

FTP-80-06
3' X 4'
5" Radii ¾" Border
6"and 10" Series D Legend
Top Yellow Background with White Legend and Black Border
Bottom White Background with Black Legend and Border

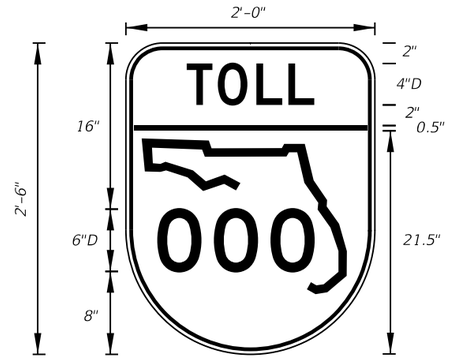

FTP-81-06
2' X 2'-6"
3" Radii ¾" Border
4" and 6" Series D Legend
Top Yellow Background with White Legend and Black Border
Bottom White Background with Black Legend and Border

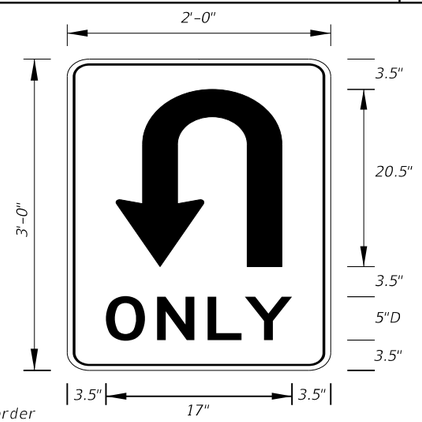

FTP-82-08
2' X 3'
1.5" Radii
5" Series D Legend
White Background
Black Legend and Border

ARROW HEAD

A	3.125
B	3.625
C	6.375
D	.5
E	.625

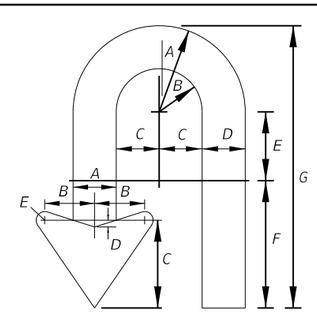

ARROW BODY

A	B	C	D	E	F	G
6.25	3.125	3.125	3.125	5	9.25	20.5

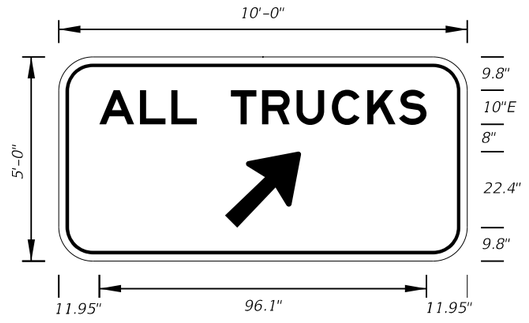

FTP-83-08
10'-0" X 5'-0"
8" Radii

10" Series E Legend
Green Background
White Legend

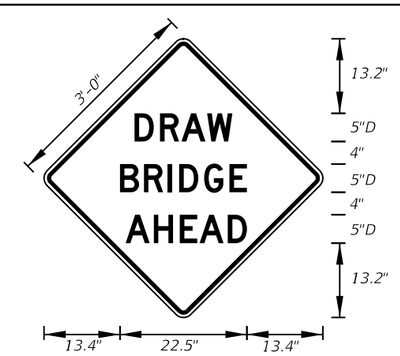

FTP-84-09
3' X 3'
1.5" Radii

5" Series D Legend
Yellow Background
Black Legend

LAST REVISION	REVISION	DESCRIPTION:			INDEX NO.	SHEET NO.
01/01/12			FDOT DESIGN STANDARDS 2013	SPECIAL SIGN DETAILS	17355	9

6/28/2012 2:17:59 PM rd960rh C:\d\projects\standards\roadway\17300-s\17355-09.dgn

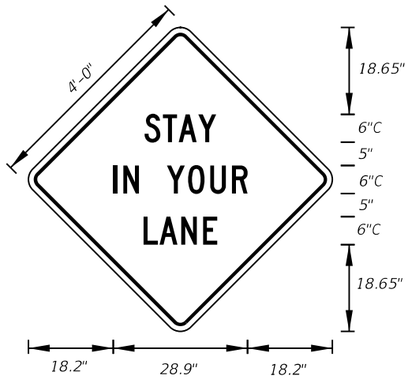

MOT-1-06
4' X 4'
2" Radii ¾" Border

6" Series C Legend
Orange Background
Black Legend and Border

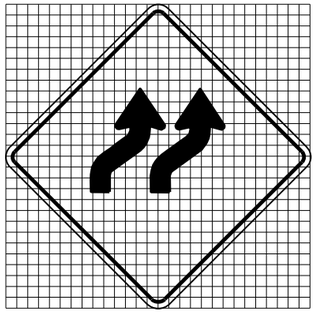

MOT-2-06
4' X 4'
2" Radii ¾" Border

Orange Background
Black Arrows and Border

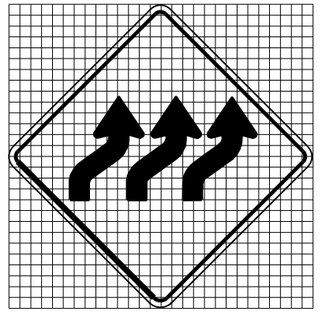

MOT-3-06
4' X 4'
2" Radii ¾" Border

Orange Background
Black Arrows and Border

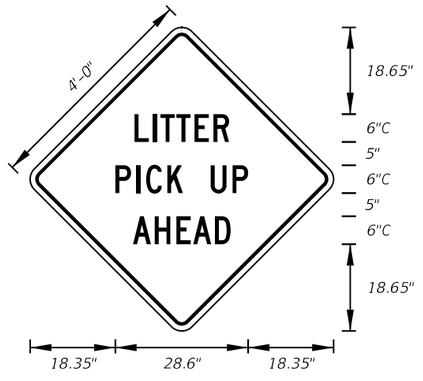

MOT-4-06
4' X 4'
2" Radii ¾" Border

6" Series C Legend
Orange Background
Black Legend and Border

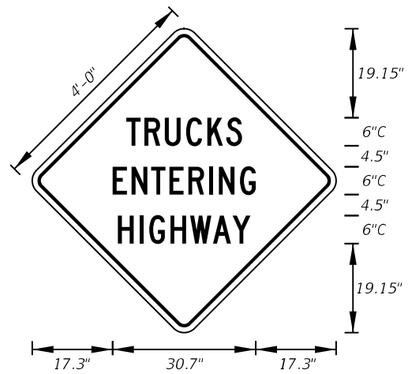

MOT-5-06
4' X 4'
2" Radii ¾" Border

6" Series C Legend
Orange Background
Black Legend and Border

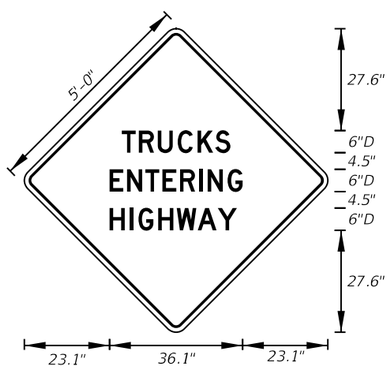

MOT-6-06
5' X 5'
2" Radii ¾" Border

6" Series D Legend
Orange Background
Black Legend and Border

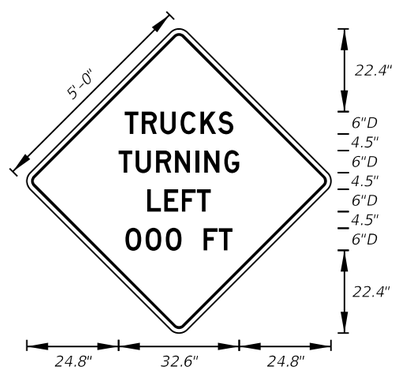

MOT-7-06
5' X 5'
2" Radii ¾" Border

6" Series D Legend
Orange Background
Black Legend and Border

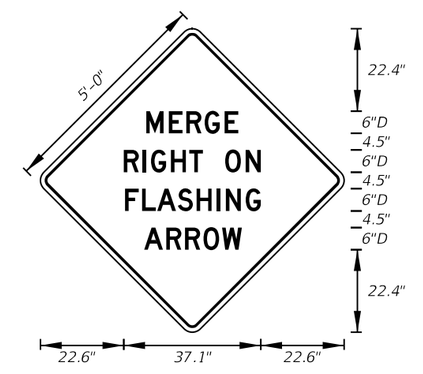

MOT-8-06
5' X 5'
2" Radii ¾" Border

6" Series D Legend
Orange Background
Black Legend and Border

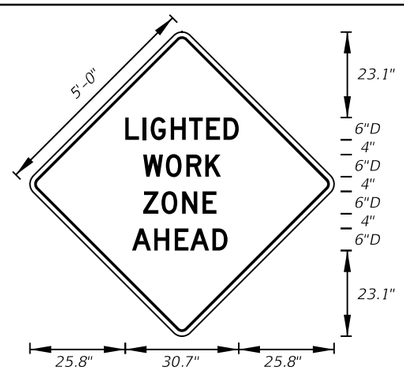

MOT-9-06
5' X 5'
2" Radii ¾" Border

6" Series D Legend
Orange Background
Black Legend and Border

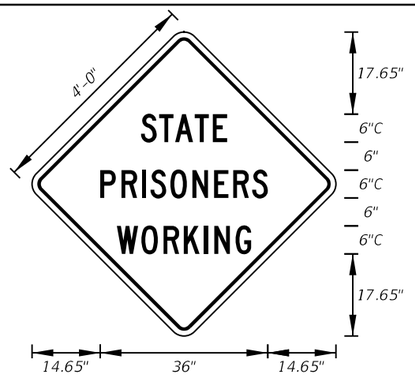

MOT-10-06
4' X 4'
2" Radii ¾" Border

6" Series C Legend
Orange Background
Black Legend and Border

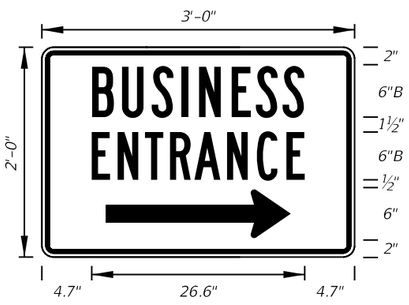

MOT-11-06
3' X 2'
2" Radii ¾" Border

6" Series B Legend
Blue Background
White Legend and Border

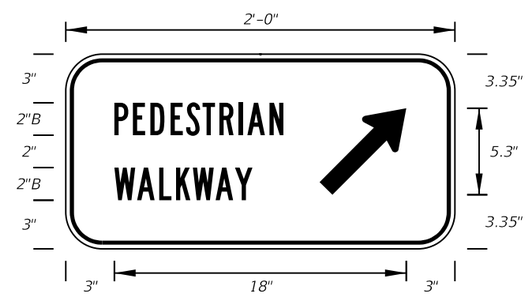

MOT-12-06
2' X 1'
2" Radii ¾" Border

2" Series B Legend
White Background
Black Legend and Border

LAST REVISION	REVISION	DESCRIPTION:				
07/01/12			FDOT DESIGN STANDARDS 2013	SPECIAL SIGN DETAILS	INDEX NO. 17355	SHEET NO. 10

C:\d\projects\standards\roadway\17300-s\17355-10.dgn
rd960rh
2:18:01 PM
6/28/2012

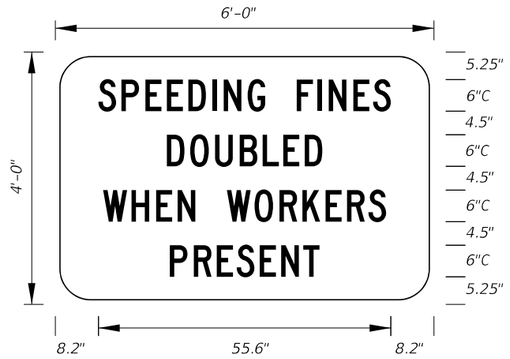

MOT-13-06 Freeway Sign
6' X 4'
6" Radii ¾" Border

6" Series C Legend
White Background
Black Legend and Border

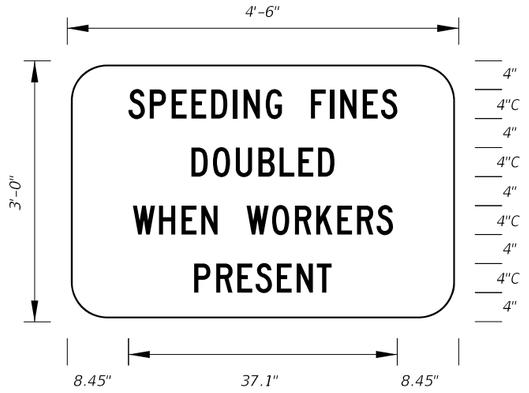

MOT-14-06 Arterial Sign
4'-6" X 3'
5" Radii ¾" Border

4" Series C Legend
White Background
Black Legend and Border

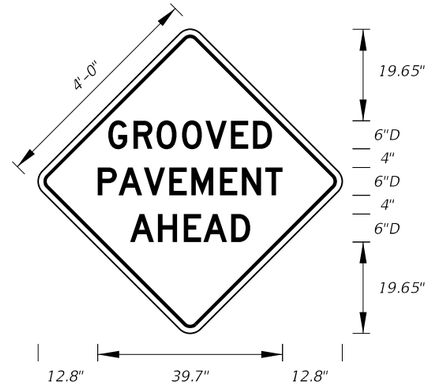

MOT-15-06
4' X 4'
2" Radii ¾" Border

6" Series D Legend
Orange Background
Black Legend and Border

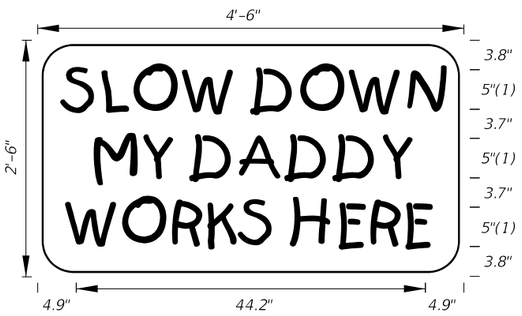

MOT-16-06
4'-6" X 2'-6"
4" Radii ¾" Border

5" Kids Series Legend
Orange Background
Black Legend and Border

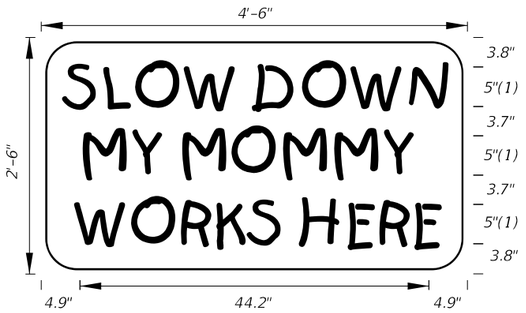

MOT-17-06
4'-6" X 2'-6"
4" Radii ¾" Border

5" Kids Series Legend
Orange Background
Black Legend and Border

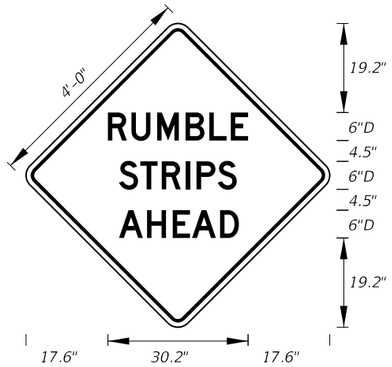

MOT-18-10
4' X 4'
2" Radii ¾" Border

6" Series D Legend
Orange Background
Black Legend and Border

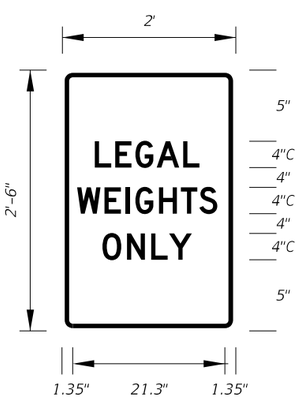

MOT-19-11
2' X 3'
1.13" Radii ¾" Border

4" Series C Legend
White Background
Red Legend and Border

C:\d\projects\standards\roadway\17300-s\17355-11.dgn
rdj960rh
2:18:03 PM
6/28/2012

LAST REVISION	REVISION	DESCRIPTION:			INDEX NO.	SHEET NO.
01/01/12			FDOT DESIGN STANDARDS 2013	SPECIAL SIGN DETAILS	17355	11

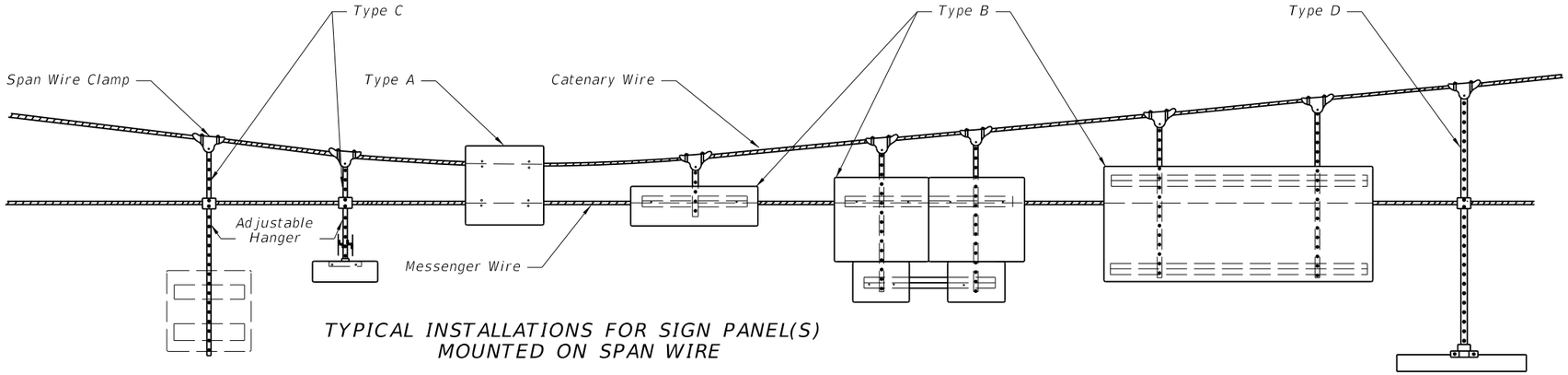

TYPICAL INSTALLATIONS FOR SIGN PANEL(S) MOUNTED ON SPAN WIRE

Notes:

1. Bottom edge of signs shall be approximately at the same elevation.
2. Type B & C attachments with one hanger shall have wind beams for signs wider than 3½'. The beams shall extend to within 6" of the sign edge.
3. Type B & C attachments for signs 4' and wider shall have 2 hangers. Signs 7' and wider shall have wind beams that extend to within 6" of the sign edge.
4. Type D attachments shall be for signs 3½' wide or less.
5. Sign panels shall meet the requirements of Index 11200.
6. Refer to section 634 of the Standard Specifications For Road And Bridge Construction.
7. All bolts, nuts, and washers shall be passivated stainless steel, AISI 300 series, commercial grade, type 316.

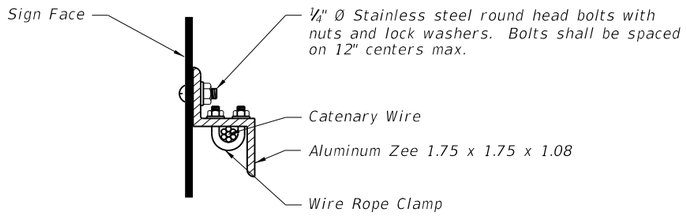

SIGN MOUNTING DETAIL

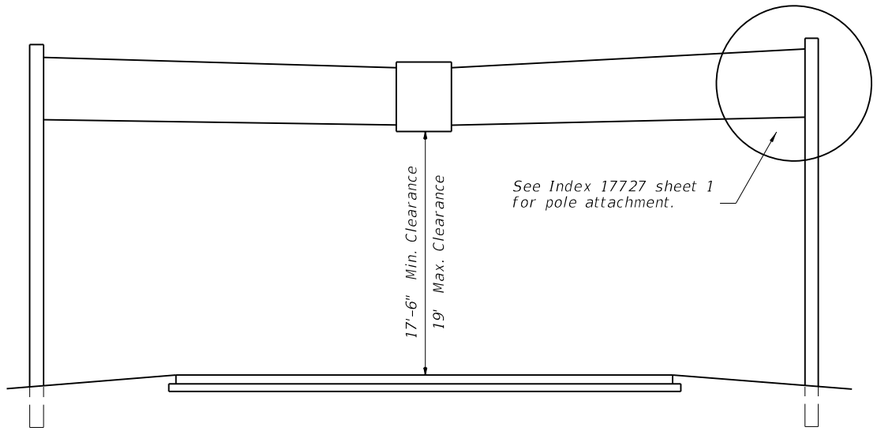

TYPICAL SPAN WIRE INSTALLATION

The overlapped connection of adjustable hangers shall use a minimum of 2 bolts with a minimum spaceing between bolts of 2".

DETAIL OF OPPOSING SIGNS SPAN WIRE MOUNTED

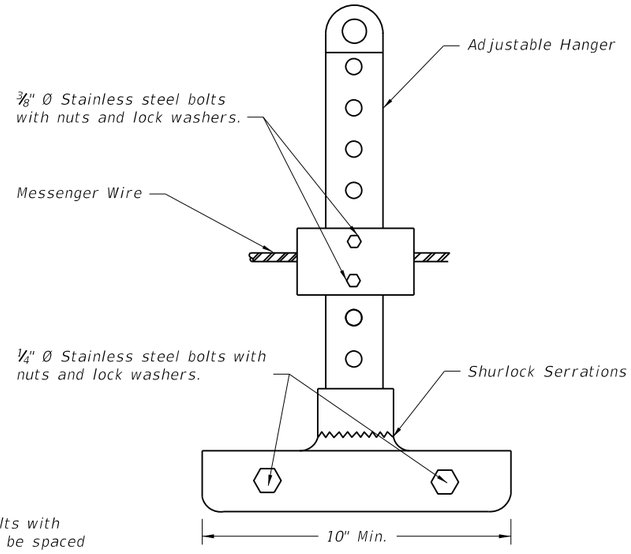

ADJUSTABLE HANGER FOR SIGN MOUNTING

TWO POINT ATTACHMENT

C:\d\projects\standards\roadway\17300-s\17356-01.dgn rd960rh 2:18:05 PM 6/28/2012

LAST REVISION	REVISION	DESCRIPTION:			INDEX NO.	SHEET NO.
07/01/09			FDOT DESIGN STANDARDS 2013	SPAN WIRE MOUNTED SIGN DETAILS	17356	1

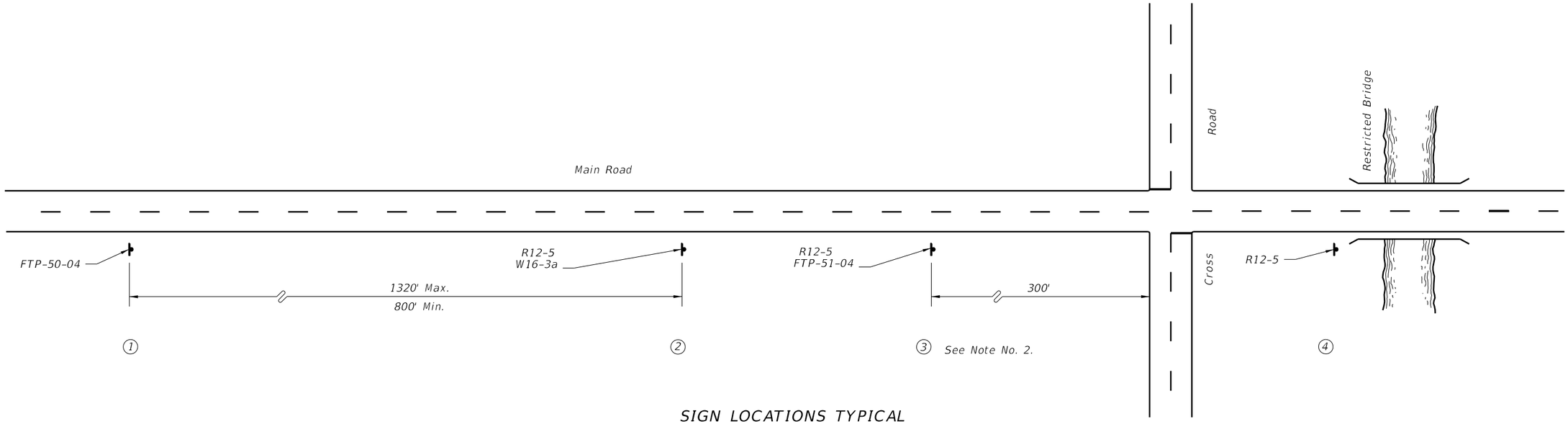

SIGN LOCATIONS TYPICAL

① WEIGHT LIMIT RESTRICTION AHEAD

FTP-50-06

② WEIGHT LIMIT 8T 12T 16T

R12-5 (24" X 36")

X MILES

W 16-3A

③ WEIGHT LIMIT 8T 12T 16T

R12-5 (24" X 36")

WEIGHT LIMIT LAST EXIT

FTP-51-06

④ WEIGHT LIMIT 8T 12T 16T

R12-5 (24" X 36")

1. See Standard Highway Signs for sign R12-5 and W16-3 details.
2. Location of Sign No. 3 may require some field adjustment.
3. The Cross Road is the last detour to route around the restricted bridge.
4. Location of Sign No. 2 should be established from the Cross Road the following approximate distances; Interstate-1 Mile Non- Interstate-1/2 Mile.
5. See Index 17355 for sign details.

6/28/2012 2:18:07 PM rd960rh C:\d\projects\standards\roadway\17300-s\17357-01.dgn

LAST REVISION	REVISION	DESCRIPTION:		FDOT DESIGN STANDARDS 2013	BRIDGE WEIGHT RESTRICTIONS	INDEX NO.	SHEET NO.
01/01/12						17357	1

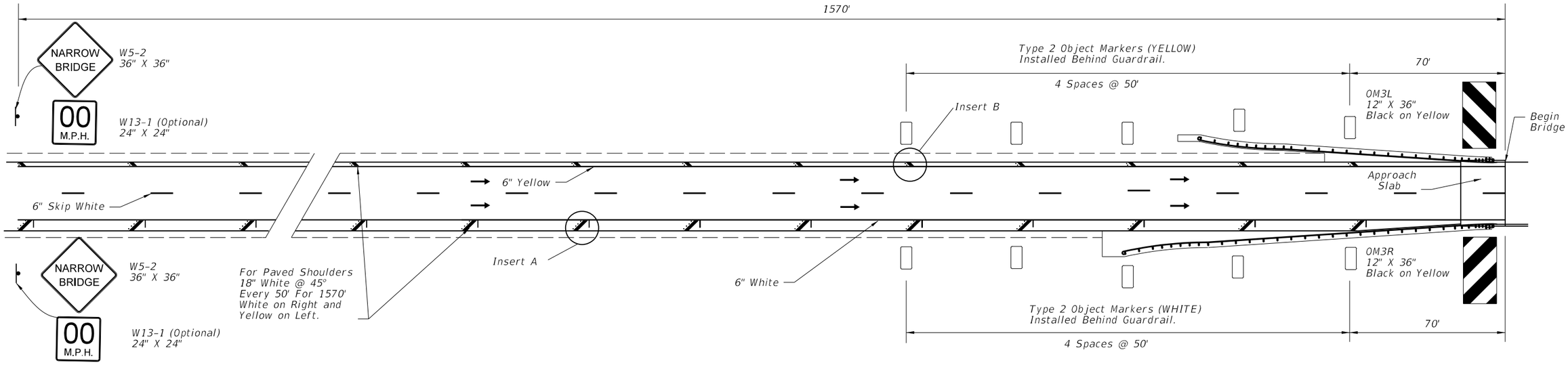

One-Way Traffic

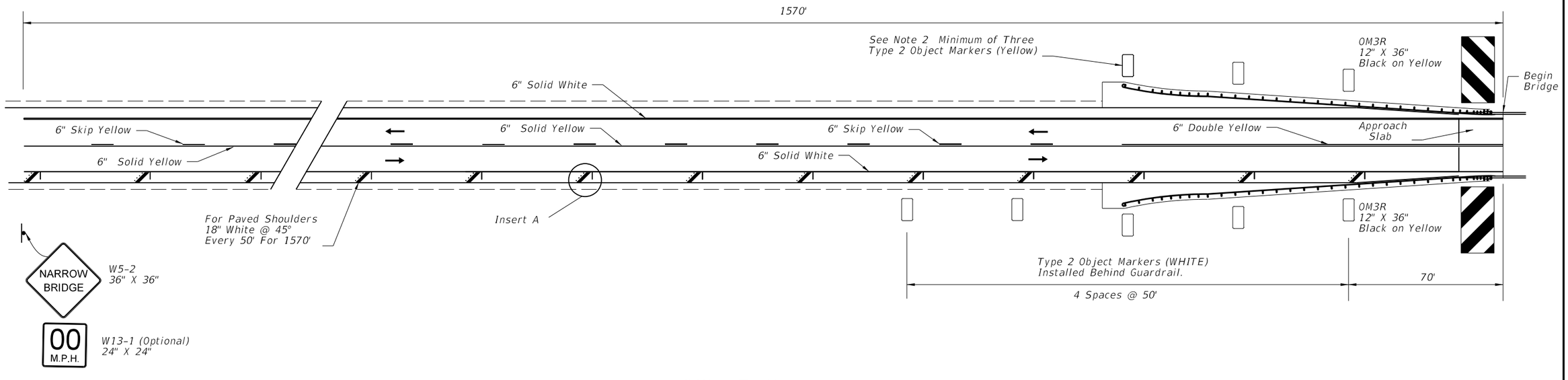

2-Way Traffic

C:\d\projects\standards\roadway\17300-s\17359-01.dgn
rd960rh
2:18:09 PM
6/28/2012

LAST REVISION	REVISION	DESCRIPTION:		FDOT DESIGN STANDARDS 2013	RURAL NARROW BRIDGE TREATMENT	INDEX NO.	SHEET NO.
07/01/09						17359	1

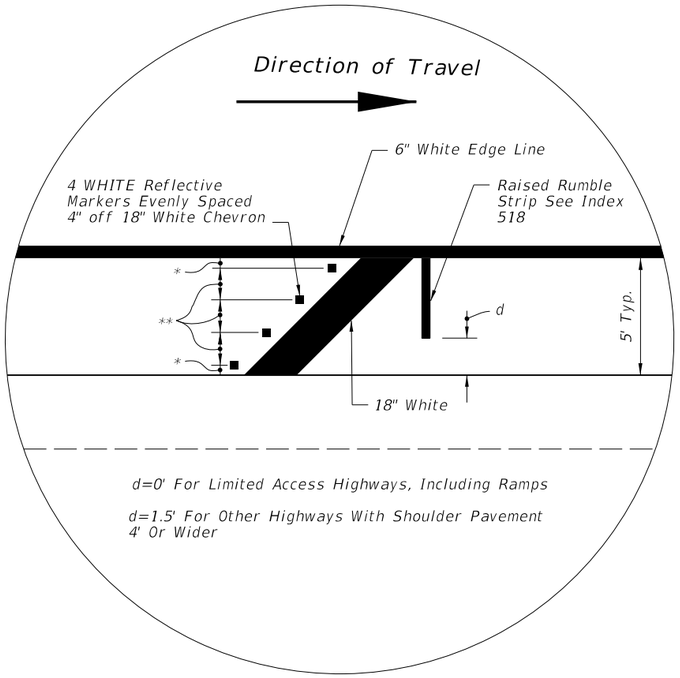

* 1/8 Length (4' and 5' shoulder)
1/4 Length (2' shoulder)

** 1/4 Length (4' and 5' shoulder)
1/2 Length (2' shoulder)

INSERT A

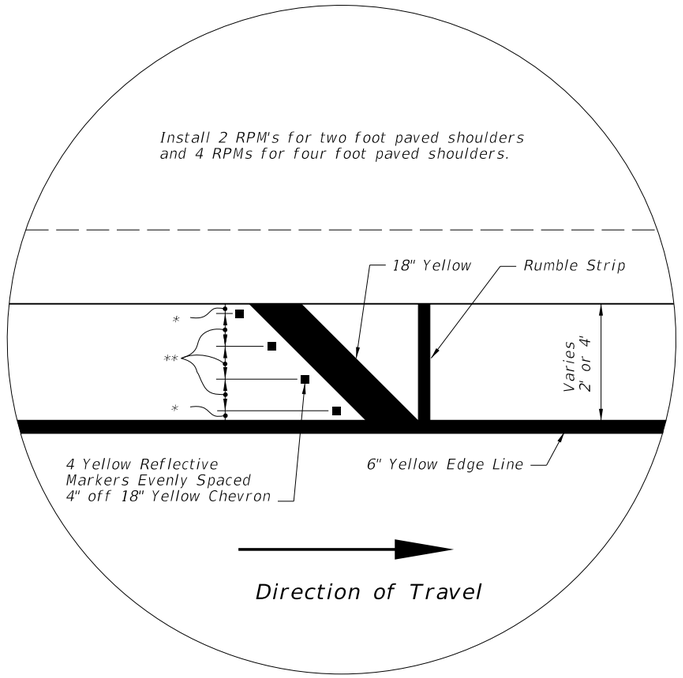

* 1/8 Length (4' and 5' shoulder)
1/4 Length (2' shoulder)

** 1/4 Length (4' and 5' shoulder)
1/2 Length (2' shoulder)

INSERT B

NOTES:

1. Bridges should be marked as narrow bridges under the following conditions:
   (1) For approach roadways with paved shoulders when the bridge width including shoulders is less than the width of the approach roadway including paved shoulders.
   (2) For approach roadways without paved shoulders when the bridge shoulder width is less than 2'.

2. Roadways with Two-Way Traffic:
   No passing zone should be extended 1570' in advance of narrow bridge.

3. If the bridge or the approach is on a curve, delineators shall be installed for a distance of 1570' in advance of narrow bridge on the outside portion of the roadway. Spacing shall be 100' between delineators. Delineators are to be placed not less than 2' or not more than 8' outside the outer edge of pavement.

4. Object markers and delineators on both sides of roadway shall face traffic approaching bridge

5. The OM-3R & OM-3L object markers shall be installed 4' above the roadway edge. The panels may be post mounted at the bridges.

6/28/2012 2:18:11 PM rd960rh C:\d\projects\standards\roadway\17300-s\17359-02.dgn

LAST REVISION	REVISION	DESCRIPTION:			INDEX NO.	SHEET NO.
07/01/09			FDOT DESIGN STANDARDS 2013	RURAL NARROW BRIDGE TREATMENT	17359	2

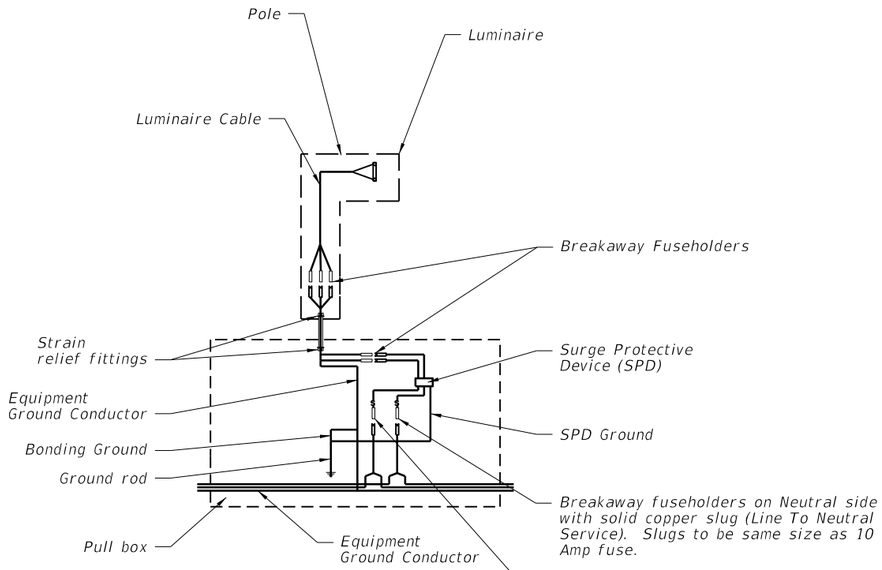

WIRING DIAGRAM

NOTES:

1. Barrier wall or bridge mounted poles: The wiring shall be in accordance with Section 992 of the Standard Specifications.

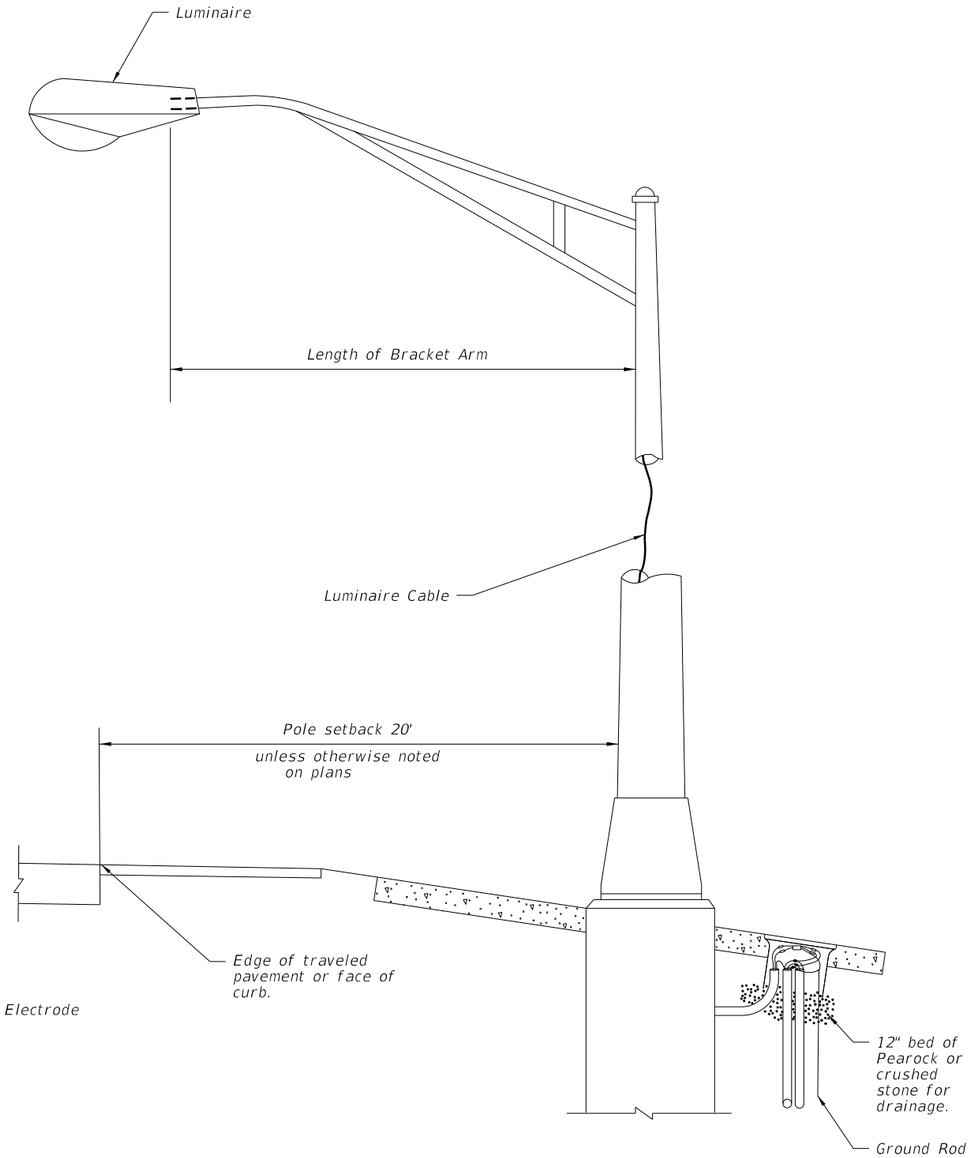

METAL POLE DETAIL

Provide cable length to remove fuseholders from transformer base, pole base or pullbox for maintenance. Remove slack from the luminaire cable to provide tension on the fuseholders if the pole breaks away. Pull excess cable into pull box tighten strain relief fittings or cable clamps at both ends of conduit to prevent cable from slipping.

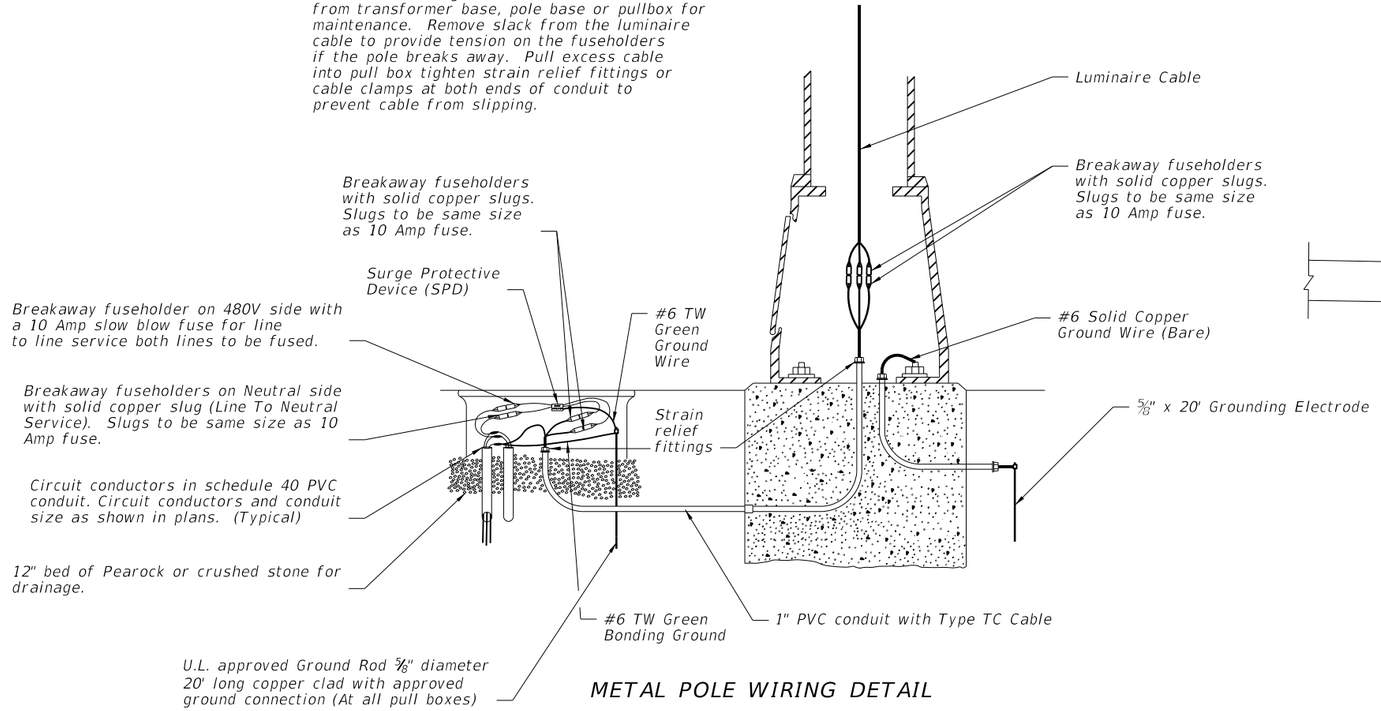

METAL POLE WIRING DETAIL

WIRING DETAILS

C:\d\projects\standards\roadway\17500-s\17500-01.dgn rd960rh 2:18:13 PM 6/28/2012

LAST REVISION	REVISION	DESCRIPTION:				
07/01/12			FDOT DESIGN STANDARDS 2013	CONVENTIONAL LIGHTING	INDEX NO. 17500	SHEET NO. 1

NOTES:

1. Use compacted select material in accordance with Index 505.
2. Concrete shall be Class NS with a minimum strength at 28 days of f'c=2.5 ksi.
3. Outside edge of slab shall be cast against formwork.
4. The pull box shown is 13" x 24"; others approved under Section 635 of the Standard Specifications may be used.
5. Slabs to be placed around all Poles and Pull Boxes in rural locations. In urban areas or where space is limited slab dimensions may be adjusted as shown in the plans.
6. Concrete for slabs around pull boxes shall be included in the price of pull box.

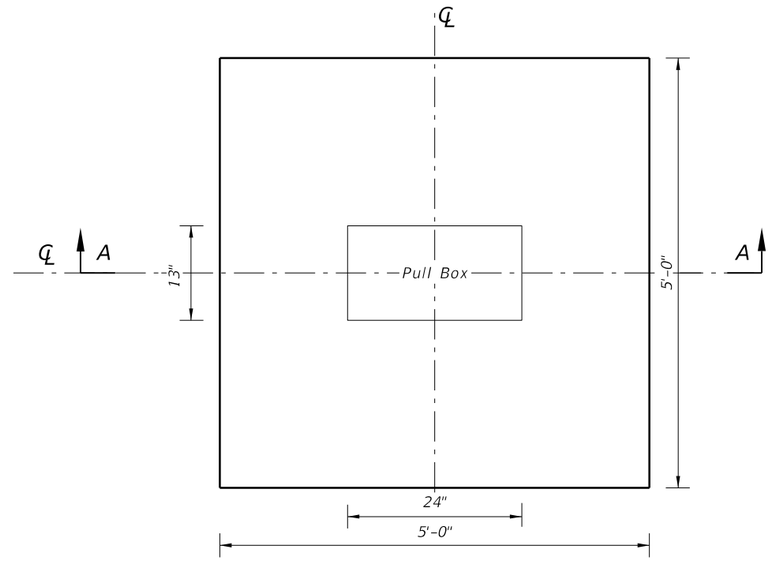

SLAB DIMENSIONS

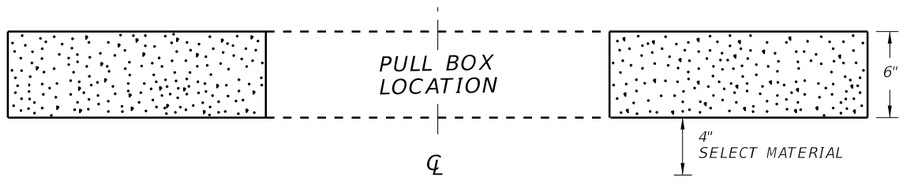

SECTION A-A

SLAB DETAILS FOR INTERMEDIATE PULLBOX LOCATIONS

C:\d\projects\standards\roadway\17500-s\17500-02.dgn
rd960rh
2:18:15 PM
6/28/2012

LAST REVISION	REVISION	DESCRIPTION:		FDOT DESIGN STANDARDS 2013	CONVENTIONAL LIGHTING	INDEX NO.	SHEET NO.
01/01/12						17500	2

NOTES:

1. Use compacted select material in accordance with Index 505.
2. Concrete shall be Class NS with a minimum strength at 28 days of f'c=2.5 ksi.
3. Outside edge of slab shall be cast against formwork.
4. The pull box shown is 13" x 24"; others approved under Section 635 of the Standard Specifications may be used.
5. Slabs to be placed around all Poles and Pull Boxes. In urban areas or where space is limited slab dimensions may be adjusted as shown in the plans.
6. Concrete for slabs around poles and pull boxes shall be included in the price of pole or pull box.
7. The expansion joint shall consist of ½" of closed-cell polyethelene foam expansion material. The top ½" of expansion material shall be removed after pouring the slab and sealed with a QPL approved Type A sealant meeting the requirements of Section 932.

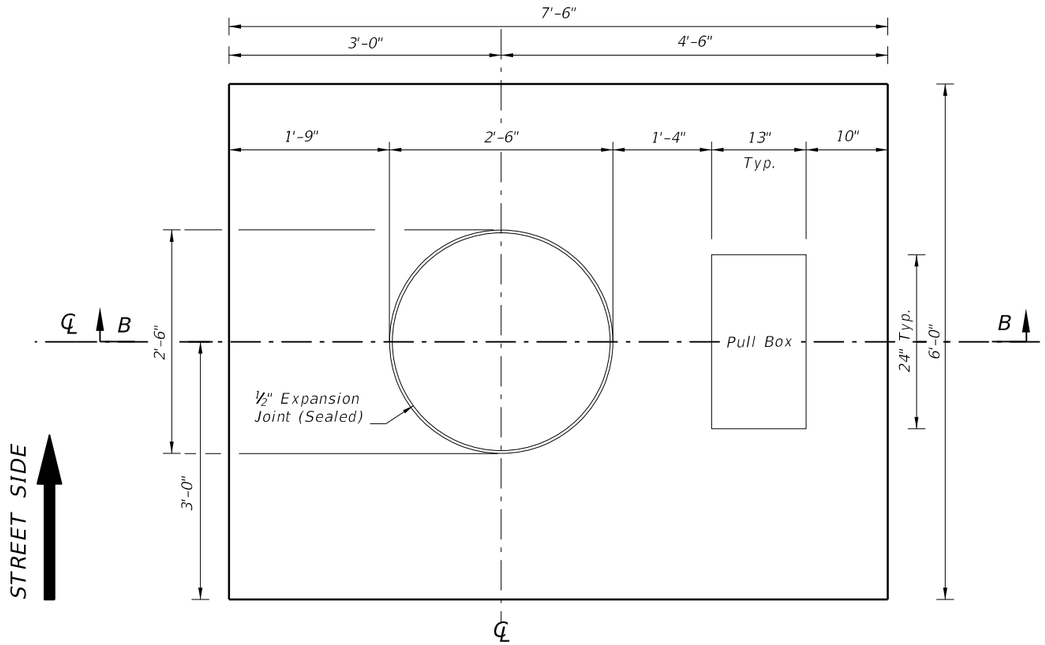

SLAB DIMENSIONS

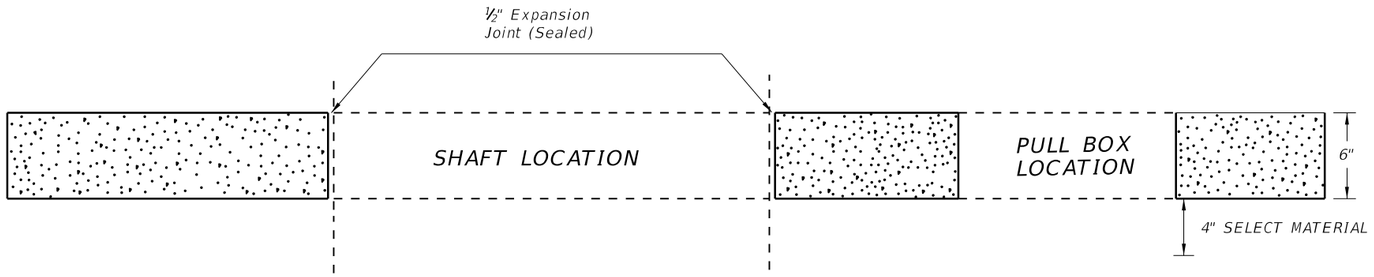

SECTION B-B

SLAB DETAILS FOR POLE AND PULL BOX LOCATIONS

6/28/2012 2:18:17 PM rd960rh C:\d\projects\standards\roadway\17500-s\17500-03.dgn

GENERAL NOTES

1. All grounding system connections shall be exothermically welded. This includes all cables, ground electrode and arrays. Do not exothermically bond grounding electrode to grounding electrode. Method of Measurement and Basis of Payment as per Section 620 of the Standard Specifications.

2. The contractor shall be responsible for contacting all utility companies prior to any underground work. The utility company will locate and identify their facilities.

3. Contractor shall determine the service required date for the power company transformer installation at the pre-construction conference.

4. The power company reserves the right to install the riser, switch gear and weatherhead on power company poles at the expense of the contractor. Contact the power company for cost or for authorization for an alternate procedure.

5. Any damaged portions of galvanized steel poles and bracket arms shall be painted in accordance with Section 562 of the Standard Specifications.

6. Before final acceptance, contractor shall provide 2 sets of full size as built plans to the maintaining agency.

7. Conduit routing shall be pole to pole, maintaining pole setback distance from edge of pavement. Any cable routing in locations where guardrail is proposed shall be 2' in front of the standard guardrail position.

8. Pole positions and conduit routing may be adjusted, as approved by the Engineer, to prevent conflicts with utility and drainage structures not indicated, and prevent guardrail post conflict with underground lighting circuits.

9. Where guardrail is constructed, the poles shall be placed a minimum of 4' behind the face of the guardrail.

10. Install pole foundations in accordance with Section 715 of the Standard Specificatios.

11. All splices shall be made in pull boxes or the pole base. No splices shall be made inside the conduit. The wires at pullboxes shall have sufficient length to completely remove connectors to the outside of pull boxes remove connectors to the outside of pull boxes to make connectors accessible for changing fuses and trouble shooting the system.

12. Neutral wires to have white insulation. Do not use white or green insulated wires for ungrounded conductors.

13. All exposed or surfaced mounted conduit shall be rigid or intermediate metal. These exposed runs of conduit shall be provided with either expansion joints or flexible metal conduit sections adequate to take care of vibrations and thermal expansions. All metal conduit shall be grounded. Steel conduit shall be hot-dipped galvanized.

14. All conduit that will remain empty as spares shall be mandrel tested, cleaned inside and both ends capped. Leave the corrosion resistant pull/drag wire and place pull boxes to mark the location of the ends of the conduits.

15. Pull boxes shall be located at ends of conduit crossing roadways, and as necessary for the completion of the project.

16. These plans represent minimum acceptable criteria. The inspection per these drawings represent the minimum base of acceptance.

17. All material, unless otherwise specified, shall be Underwriters Laboratory approved.

18. A pull box shall be installed at each pole location. Pull boxes should be located 2' max from pole unless otherwise directed by the project engineer. Metal pull box covers shall be grounded. See General Requirements Section 635-5 of the Standard Specifications for Road and Bridge Construction.

19. At all pull boxes and pole bases, ends of conduit shall be sealed in accordance with Section 630 of the Standard Specifications for Road and Bridge Construction.

20. All mounting heights are ± 2'-6" unless otherwise noted in plans.

21. A handhole is required in all poles. Handhole should be located opposite approaching traffic with cover fastened with Stainless Steel Screws. The handhole opening shall be at least 20 square inches.

22. The luminaire and arm on joint use poles shall be grounded.

BREAKAWAY FEATURE

All conventional mounting height poles shall be mounted on a frangible metal base. The base shall shall be one piece and be designed to breakaway without the aid of any slipping or sliding surfaces. The design of the breakaway feature shall be in accordance with the breakaway performance requirements of the AASHTO 'Standard Specifications For Structural Supports For Highway Signs, Luminaires and Traffic Signals'. The contractor (supplier) shall submit copies of test reports as evidence the breakaway feature meets the above specifications and calculations to verify the design will meet the AASHTO wind loading specified in the contract plans. No poles are to be installed prior to approval of submittal data.

Any substantial remains of a breakaway support, when it is broken away, should not project more than 4" as discussed in Section 7 of the above AASHTO Specifications, and, Chapter 4, Section 4.2 of the AASHTO 'Roadside Design Guide'.

Poles behind bridge rail or barrier wall mounted, shall be non-frangible.

6/28/2012 2:18:19 PM rd960rh C:\d\projects\standards\roadway\17500-s\17501-01.dgn

LAST REVISION	REVISION	DESCRIPTION:		FDOT DESIGN STANDARDS 2013	HIGHWAY LIGHTING GENERAL NOTES	INDEX NO.	SHEET NO.
07/01/09						17501	1

HIGHMAST LIGHTING NOTES:

1. High Mast materials:
   a. Pole: ASTM A1011 Grade 50, 55, 60 or 65 (Less than ¼") or ASTM A572 Grade 50, 55, 60, or 65 (¼" and over) or ASTM A595 Grade A (55 ksi yield) or Grade B (60 ksi yield).

   b. Steel Plates: ASTM A709 Grade 36 or ASTM A36

   c. Weld Metal: E70XX

   d. Anchor Bolts: ASTM F1554 Grade 55 with ASTM A563, Grade A heavy-hex nuts and plate washer.

   e. Handhole: ASTM A709 Grade 36 or ASTM A36 Frame with ASTM A36 cover.

   f. Caps: ASTM A1011 Grade 50, 55, 60 or 65 or ASTM B209.

   g. Nut Covers: ASTM B26 (319-F)

   h. Stainless Steel Screws: AISI Type 316

2. Reinforcing steel: ASTM A615, Grade 60.

3. Concrete: Class IV (Drilled Shaft) with a minimum 4,000 psi compressive strength at 28 days for all environmental classifications.

4. Welding: American Welding Society Structural Welding Code (Steel) ANSI/AWS D1.1 Current edition).

5. Galvanization:

   a. Nuts, Bolts, Washers and Threaded Bars/Studs: ASTM F2329.

   b. Other items (Including Pole): ASTM A123

6. Hole diameters for anchor bolts: not greater than the bolt diameter plus ½".

7. Poles: Tapered with the diameter changing at a rate of 0.14 inch per foot with a minimum 16-sided pole shaft and maximum of two longitudinal seam welds. Circumferentially welded pole shaft butt splices and laminated pole shafts are not permitted. Longitudinal seam welds within 6 inches of pole to base must be complete penetration welds. Longitudinal seam welds at telescopic field joints must be complete penetration welds for the splice length plus 6 inches.

8. One hundred percent of full-penetration groove welds and a random 25 percent of partial penetration groove welds shall be inspected. Full-penetration groove weld inspection shall be performed by nondestructive methods of radiography or ultrasonics.

9. Furnish each pole with a 2"x4" (Max.) aluminum identification tag. Submit details for approval. Secure to pole with 0.124" stainless steel rivets or screws. Locate identification tag on the inside of pole and visible from handhole. Include the following information: Financial Project ID, Pole Mounting Height, Manufacturer's Name, Fy of Steel, and Base Wall Thickness.

10. Verify CSL access tubes will not interfere with anchor bolt installation before excavating the shaft. When CSL access tube locations conflict with anchor bolt locations, move the CSL access tube location ± two inches along the inner circumference of the reinforcing cage. Notify the Engineer before excavating the shaft if the CSL access tube locations cannot be moved out of conflict with anchor bolt locations.

DESIGN CRITERIA:

1. Designed in accordance with the FDOT Structures Manual.

2. Poles are designed to support the following:
   a. (1) cylindrical head assembly with a maximum effective projected area of 6 SF (Cd=1) and 340 lbs (Max).
   b. (8) cylindrical luminaires with a maximum effective projected area of 3.0 SF (Cd=0.5) and 77 lbs. each.

3. Foundation design based upon the following soil criteria:
   Classification = Cohesionless (Fine Sand)
   Friction Angle = 30 Degrees (30°)
   Unit Weight = 50 pcf (assumed saturated)

   Only in cases where the Designer considers the soil types at the specific site location to be of lesser strength properties should an analysis be required. Auger borings, SPT borings or CPT soundings may be utilized as needed to verify the assumed soil properties, and at relatively uniform sites, a single boring or sounding may cover several foundations. Furthermore, borings in the area that were performed for other purposes may be used to confirm the assumed soil properties.

4. Foundation applies only to slopes of 1:4 or flatter. Provide a minimum 24" shaft projection on the high side.

5. Poles are designed for 6 mil galvanization thickness.

C:\d\projects\standards\roadway\17500-s\17502-01.dgn
rd960rh
2:18:22 PM
6/28/2012

STANDARD POLE DESIGN NOTES

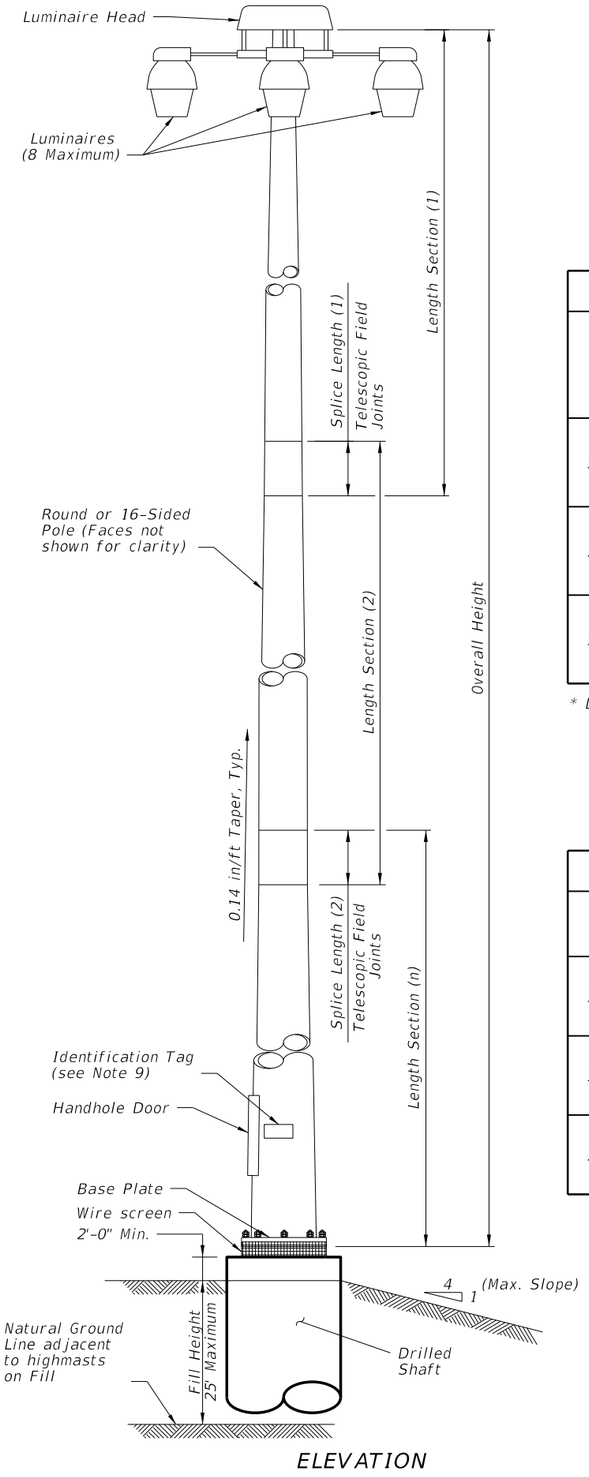

ELEVATION

Pole Design Table*

Design Wind Speed	Pole Overall Height (ft)	Section 1 (Top)					Section 2					Section 3				
		Length	Wall Th.	Minimum Splice L.	Tip Dia.	Base Dia.	Length	Wall Th.	Minimum Splice L.	Tip Dia.	Base Dia.	Length	Wall Th.	Minimum Splice L.	Tip Dia.	Base Dia.
110 mph	80	42'-0"	0.250"	2'-0"	5.313"	11.219"	40'-0"	0.250"	---	10.375"	16.000"	---	---	---	---	---
	100	24'-6"	0.179"	2'-0"	6.406"	9.844"	40'-0"	0.250"	2'-6"	9.188"	14.781"	40'-0"	0.250"	---	13.875"	19.500"
	120	44'-9"	0.250"	2'-0"	6.250"	12.531"	40'-0"	0.250"	2'-9"	11.688"	17.313"	40'-0"	0.313"	---	16.375"	22.000"
130 mph	80	42'-0"	0.250"	2'-0"	5.281"	11.188"	40'-0"	0.313"	---	10.375"	16.000"	---	---	---	---	---
	100	24'-6"	0.179"	2'-0"	6.906"	10.344"	40'-0"	0.250"	2'-6"	9.656"	15.281"	40'-0"	0.313"	---	14.375"	20.000"
	120	45'-6"	0.250"	2'-6"	9.250"	15.625"	40'-0"	0.250"	3'-0"	14.719"	20.344"	40'-0"	0.313"	---	19.375"	25.000"
150 mph	80	42'-3"	0.250"	2'-3"	7.281"	13.219"	40'-0"	0.313"	---	12.375"	18.000"	---	---	---	---	---
	100	24'-6"	0.250"	2'-0"	8.188"	11.625"	40'-0"	0.313"	2'-6"	10.781"	16.406"	40'-0"	0.375"	---	15.375"	21.000"
	120	46'-6"	0.250"	3'-0"	12.406"	18.938"	40'-0"	0.313"	3'-6"	17.938"	23.563"	40'-0"	0.375"	---	22.375"	28.000"

* Diameter Measured Flat to Flat

Base Plate and Bolts Design Table

Design Wind Speed	Pole Overall Height (ft)	Base Plate Diameter	Base Plate Thickness	Bolt Circle	No. Bolts	Bolt Diameter	Bolt Embedment
110 mph	80	30.0"	2.500"	23.0"	8	1.75"	38"
	100	33.5"	2.500"	26.5"	8	1.75"	42"
	120	36.0"	2.750"	29.0"	8	1.75"	45"
130 mph	80	30.0"	2.500"	23.0"	8	1.75"	43"
	100	34.0"	2.750"	27.0"	8	1.75"	50"
	120	41.0"	3.250"	33.0"	8	2.00"	52"
150 mph	80	32.0"	2.750"	25.0"	8	1.75"	49"
	100	37.0"	3.000"	29.0"	8	2.00"	53"
	120	46.0"	3.250"	37.0"	10	2.25"	57"

Shaft Design Table

Design Wind Speed	Pole Overall Height (ft)	Shaft Diameter	Shaft Length	Longitudinal Reinforcement
110 mph	80	4'-0"	13'-0"	14 - # 11
	100	4'-0"	15'-0"	14 - # 11
	120	4'-6"	16'-0"	16 - # 11
130 mph	80	4'-0"	14'-0"	14 - # 11
	100	4'-0"	16'-0"	14 - # 11
	120	4'-6"	18'-0"	16 - # 11
150 mph	80	4'-0"	16'-0"	14 - # 11
	100	4'-6"	17'-0"	16 - # 11
	120	5'-0"	20'-0"	18 - # 11

POLE DESIGN TABLES

C:\d\projects\standards\roadway\17500-s\17502-02.dgn
rd960rh
2:18:24 PM
6/28/2012

LAST REVISION	REVISION	DESCRIPTION:				
01/01/09			FDOT DESIGN STANDARDS 2013	HIGHMAST LIGHTING	INDEX NO. 17502	SHEET NO. 2

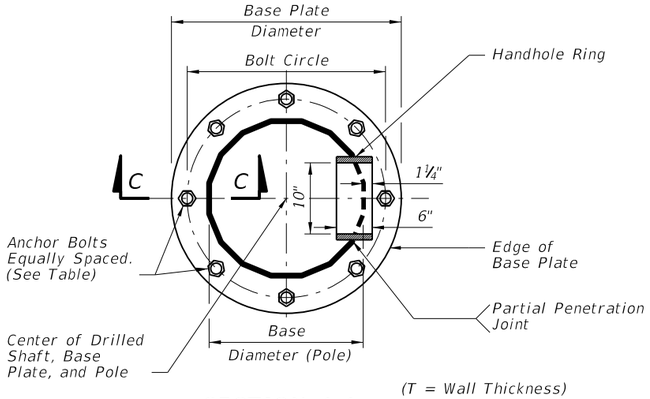

SECTION A-A

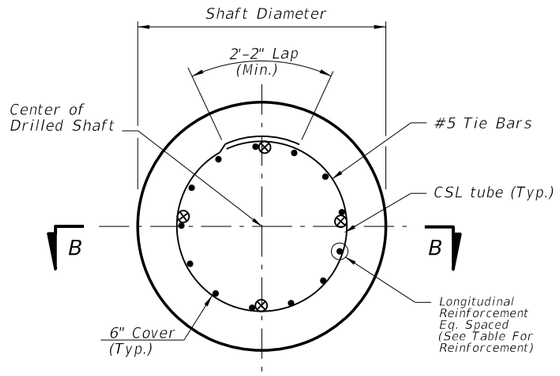

FOUNDATION PLAN

(Anchor Bolts and Conduits Not Shown)

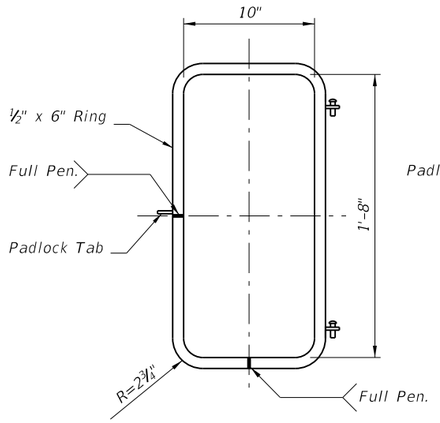

HANDHOLE RING

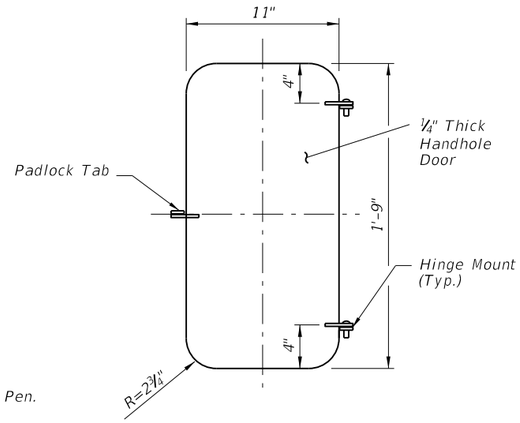

HANDHOLE DOOR

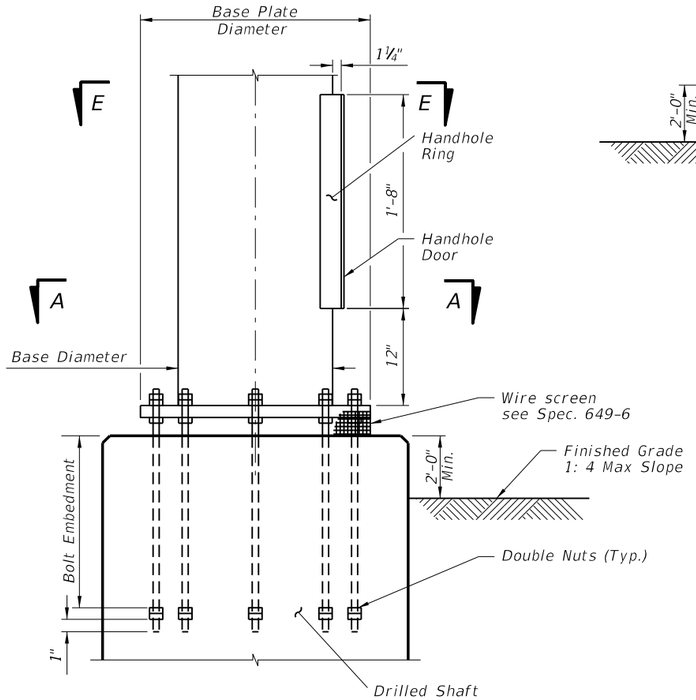

BASE PLATE AND ANCHORAGE ELEVATION

(Conduits Not Shown)

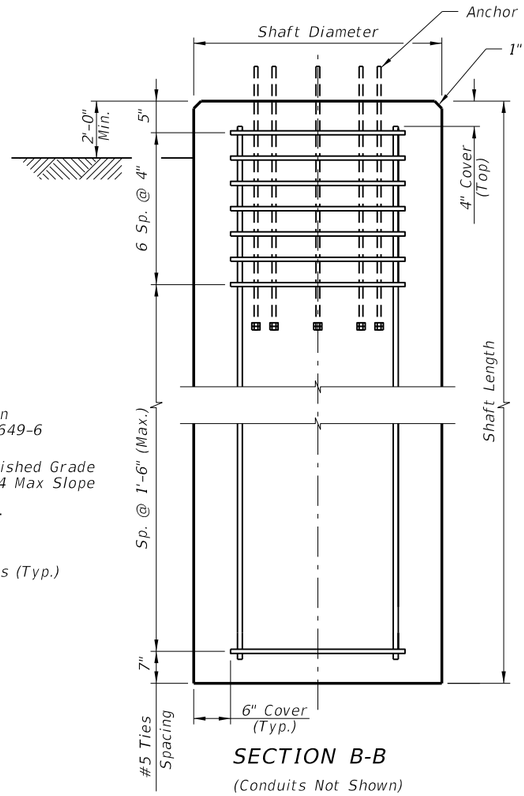

SECTION B-B

(Conduits Not Shown)

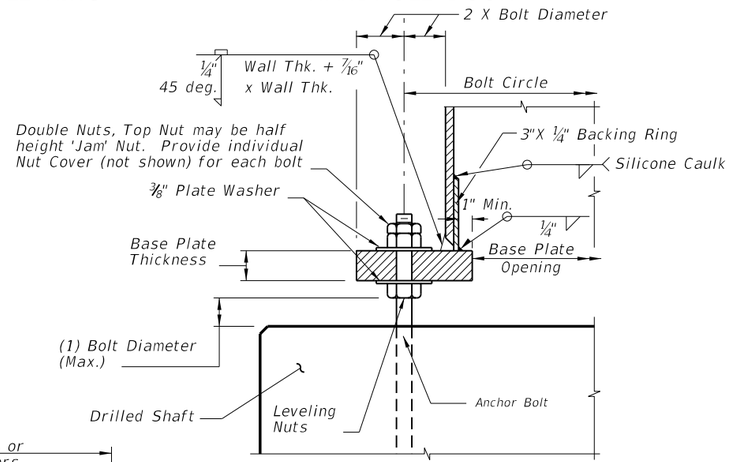

SECTION C-C

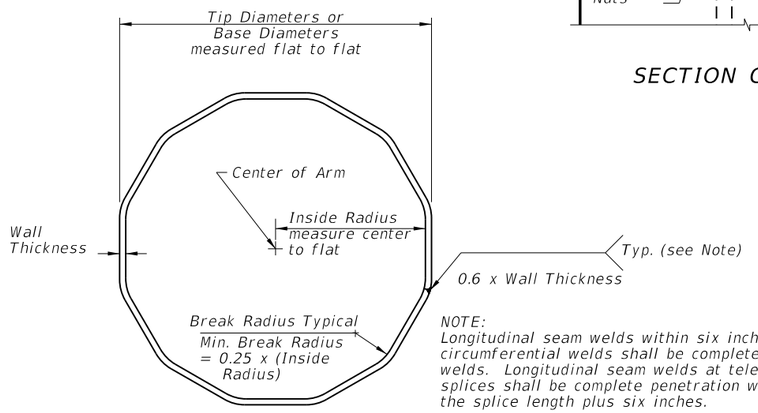

SECTION E-E

NOTE:
Longitudinal seam welds within six inches of circumferential welds shall be complete penetration welds. Longitudinal seam welds at telescopic field splices shall be complete penetration welds for the splice length plus six inches.

POLE FOUNDATION

C:\d\projects\standards\roadway\17500-s\17502-03.dgn rd960rh 2:18:26 PM 6/28/2012

LAST REVISION	REVISION	DESCRIPTION:		FDOT DESIGN STANDARDS 2013	HIGHMAST LIGHTING	INDEX NO.	SHEET NO.
07/01/10						17502	3

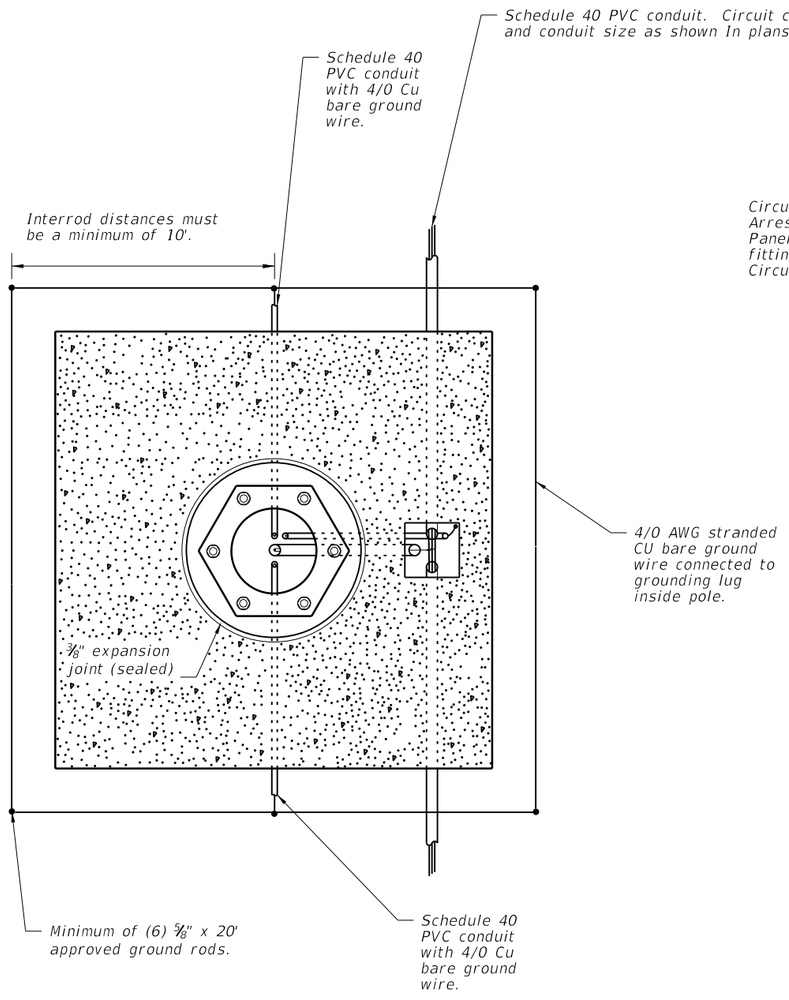

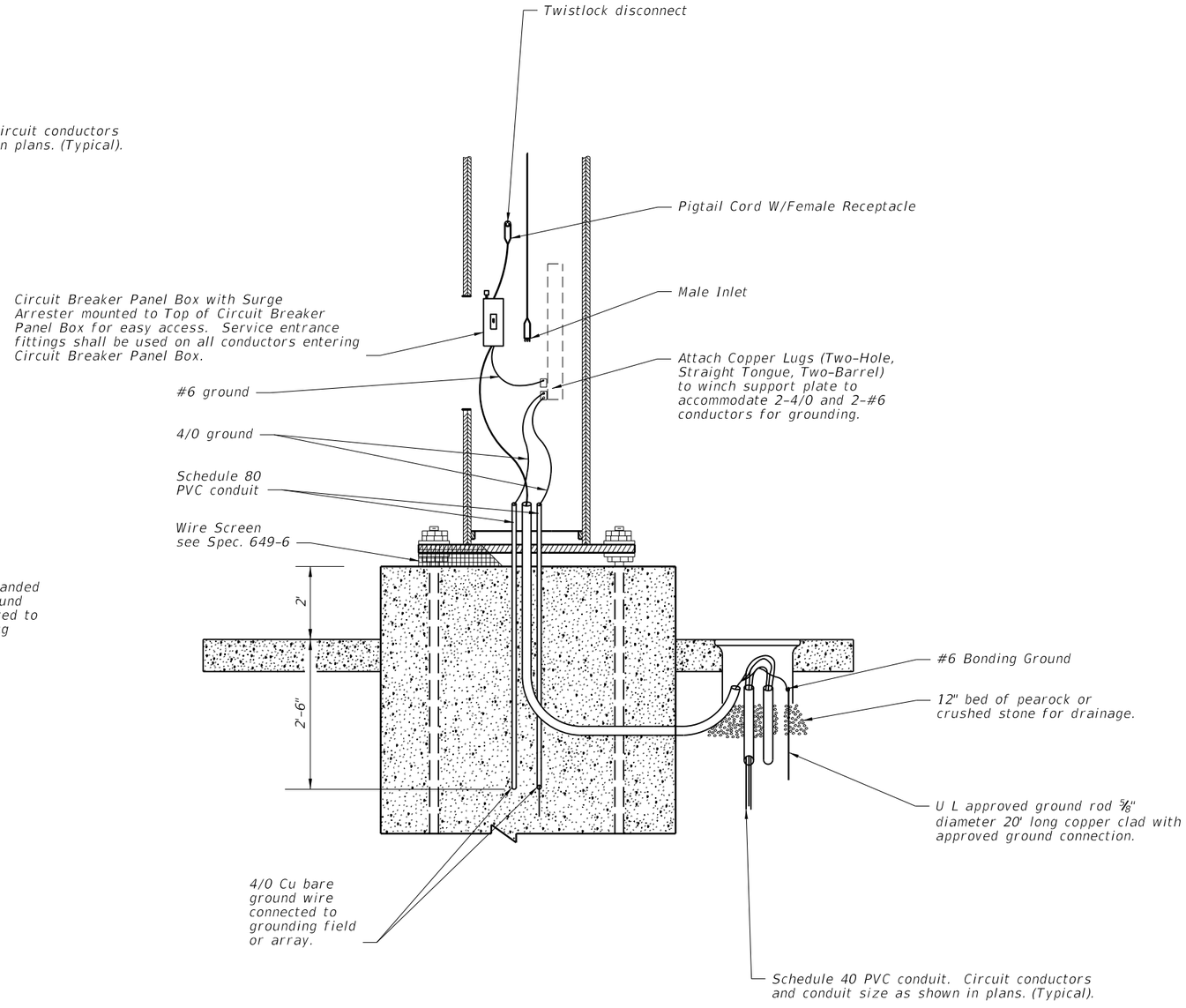

NOTES:

1. At all pull boxes and pole bases, ends of conduit shall be sealed in accordance with Section 630 of the Standard Specifications For Road And Bridge Construction.
2. Slabs to be placed around all Poles and Pull Boxes.
3. For Pull Boxes between Poles refer to Index 17500.

WIRING DETAILS

LAST REVISION	REVISION	DESCRIPTION:		FDOT DESIGN STANDARDS 2013	HIGHMAST LIGHTING	INDEX NO.	SHEET NO.
01/01/12						17502	4

C:\d\projects\standards\roadway\17500-s\17502-04.dgn rd960rh 2:18:28 PM 6/28/2012

The contractor's attention is directed to those plan sheets detailing the mounting of luminaires at the pole top. Particular attention is directed to alignment of luminaire light distributions. Special attention must be exercised in the physical alignment of these luminaires to ensure that the approved photometric layout is physically produced at each lighting standard in the field. A marking shall be placed on the external face of the refractor to allow visual inspection of alignment. The marking shall correspond to the 0° axis of the refractor.

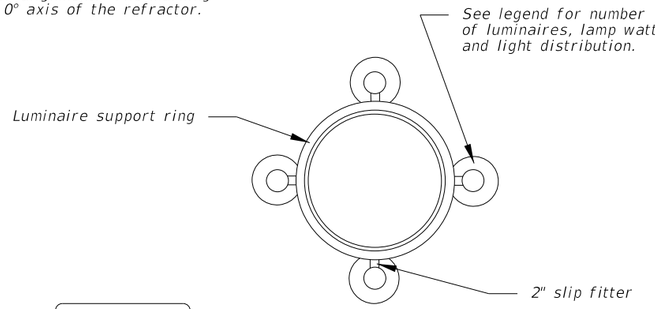

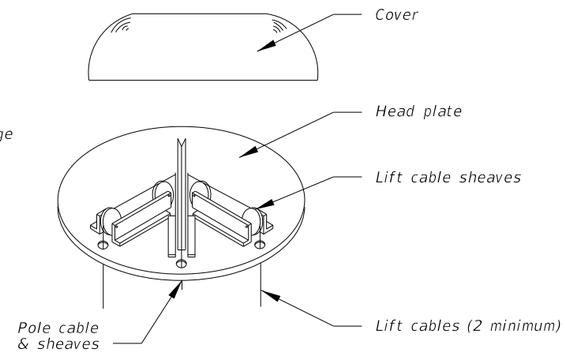

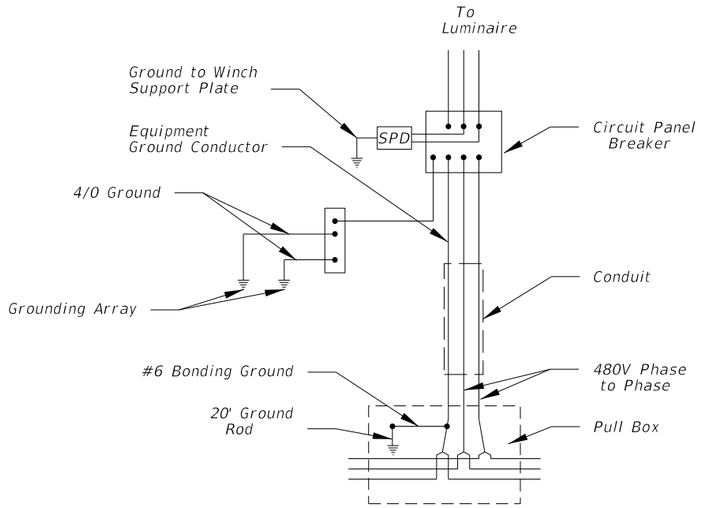

HIGH MAST POLE WIRING DIAGRAM

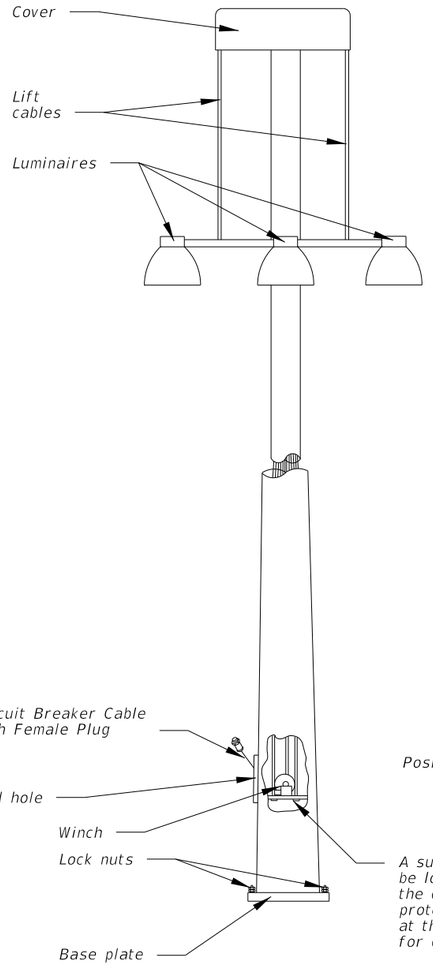

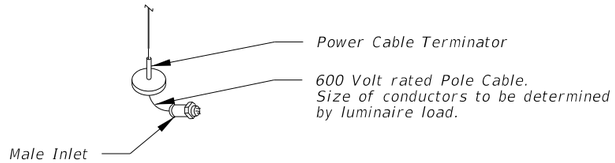

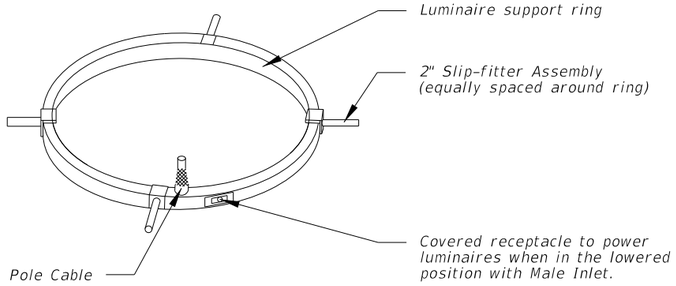

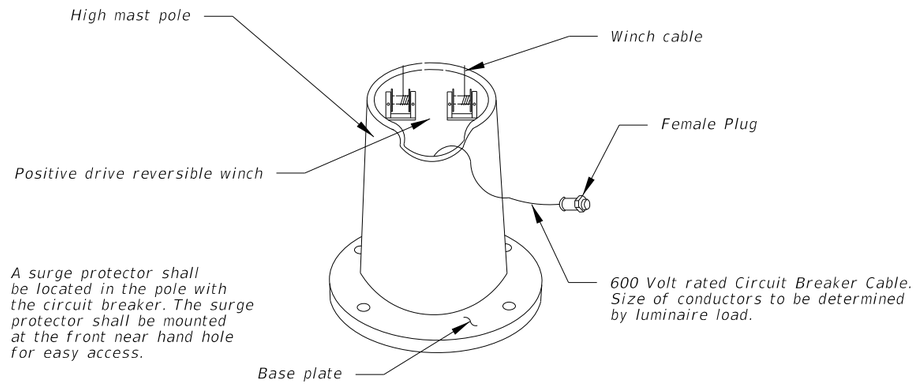

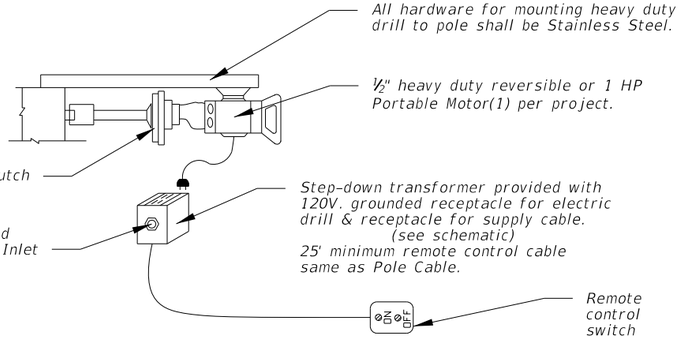

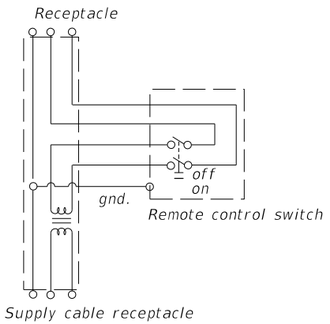

SCHEMATIC OF REMOTE AUXILIARY POWER UNIT

LOWERING DETAILS

6/28/2012 2:18:30 PM rd960rh C:\d\projects\standards\roadway\17500-s\17502-05.dgn

NOTES:

1. Use compacted select material in accordance with Index 505.
2. Concrete shall be Class NS with a minimum strength at 28 days of f'c=2.5 ksi.
3. Outside edge of slab shall be cast against formwork.
4. The pull box shown is 13" x 24"; others approved under Section 635 of the Standard Specifications may be used.
5. Slabs to be placed around all Poles and Pull Boxes. In urban areas or where space is limited slab dimensions may be adjusted as shown in the plans.
6. Concrete for slabs around poles and pull boxes shall be included in the price of pole or pull box.
7. The expansion joint shall consist of ½" of closed-cell polyethelene foam expansion material. The top ½" of expansion material shall be removed after pouring the slab and sealed with a QPL approved Type A sealant meeting the requirements of Section 932.

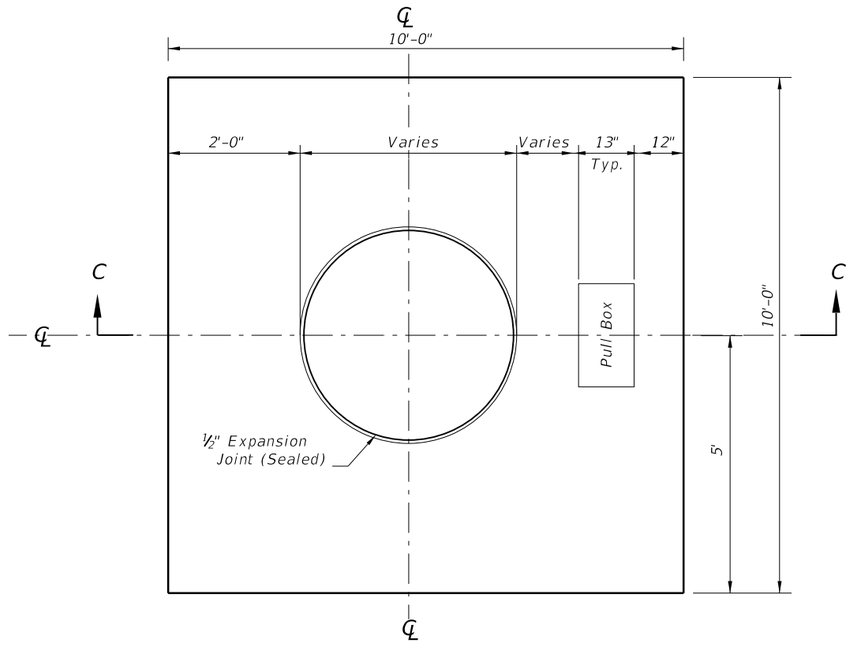

SLAB DIMENSIONS

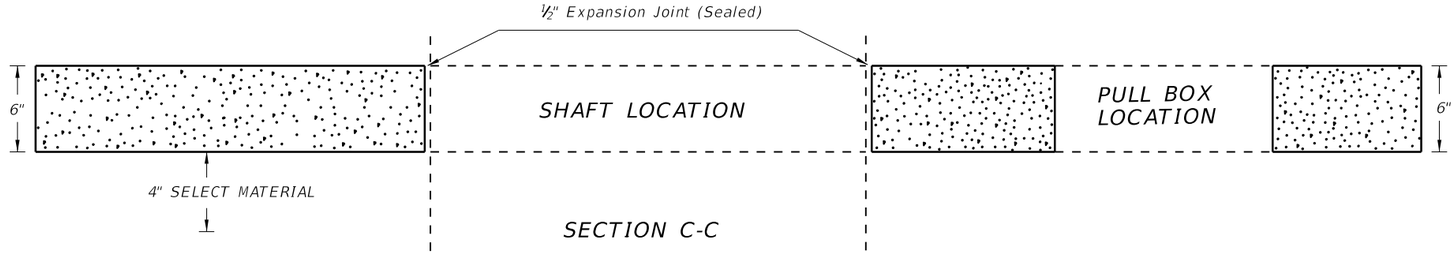

SLAB DETAILS

C:\d\projects\standards\roadway\17500-s\17502-06.dgn
rd960rh
2:18:32 PM
6/28/2012

LAST REVISION	REVISION	DESCRIPTION:		FDOT DESIGN STANDARDS 2013	HIGHMAST LIGHTING	INDEX NO.	SHEET NO.
07/01/12						17502	6

NOTE :
It shall be the contractors responsibility to provide a complete service assembly as per the plans and service specifications.
The service installation shall meet the requirements of the national electric code and applicable local codes.
Shop drawings are not required for service equipment, unless noted in the plans.

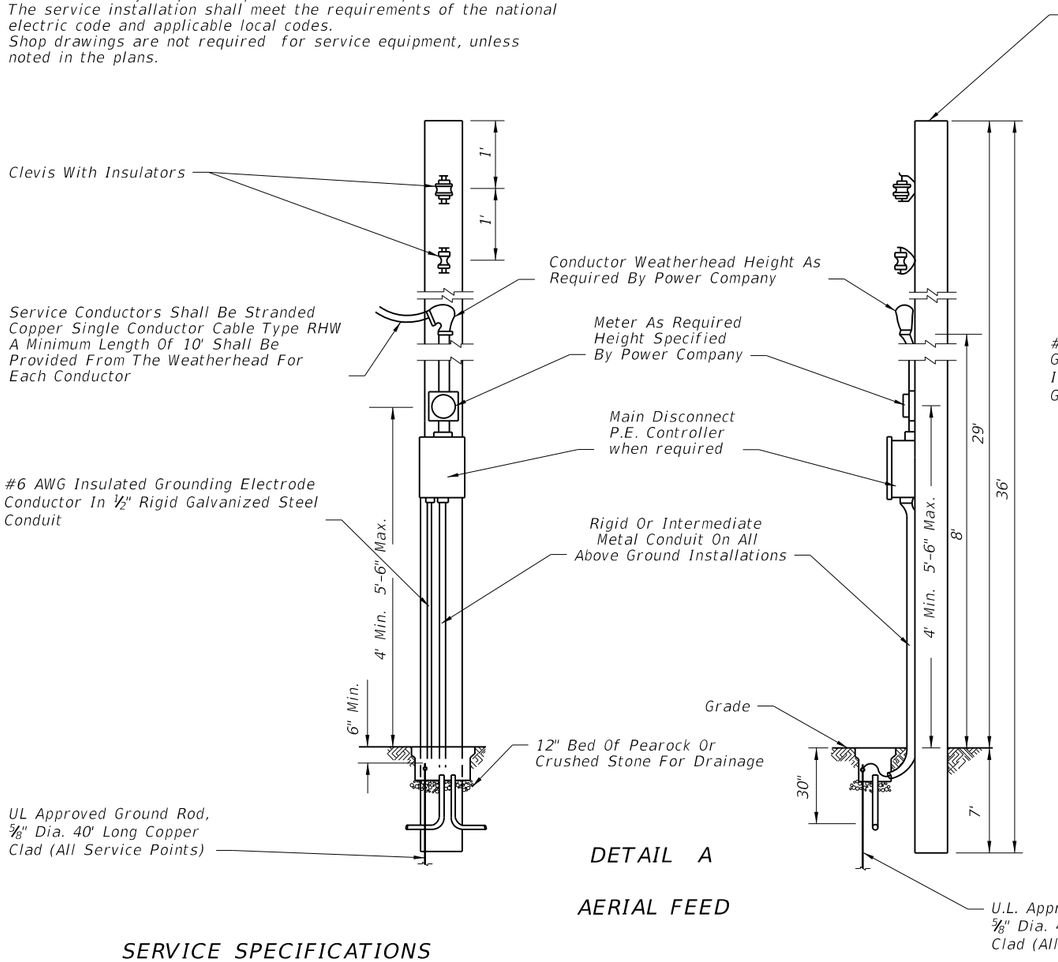

DETAIL A

AERIAL FEED

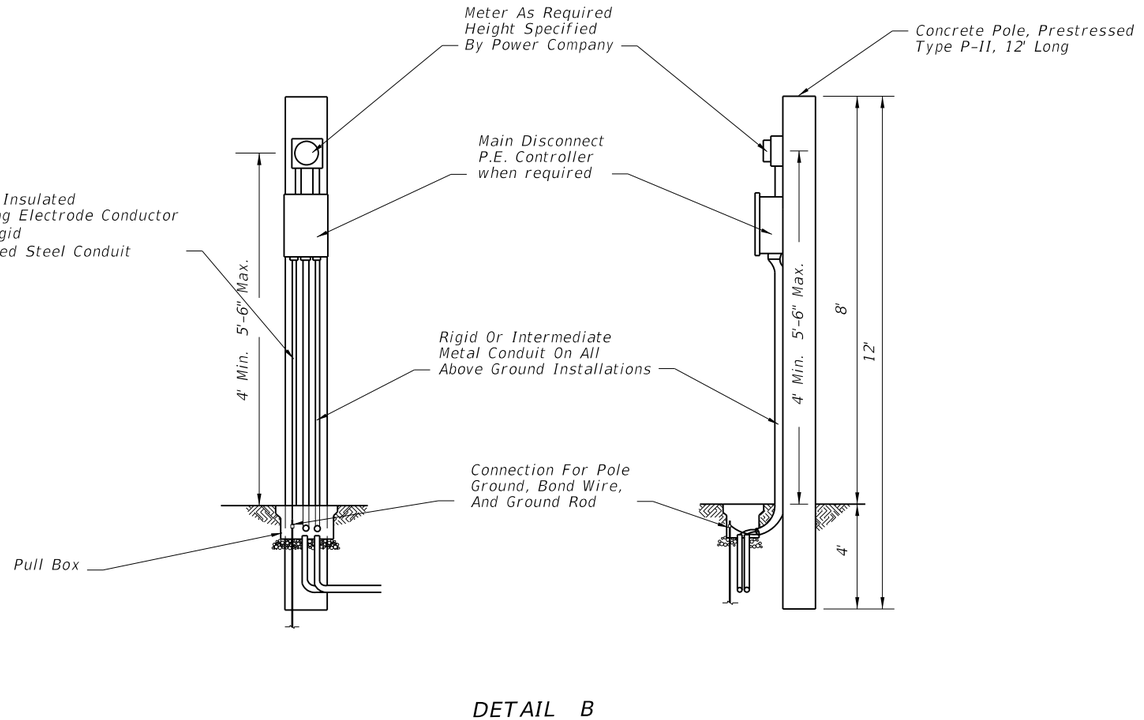

DETAIL B

UNDERGROUND FEED

SERVICE SPECIFICATIONS

1. The main disconnect shall be NEMA 3R, pole mounted.
2. The enclosure door shall be lockable by padlock and four keys provided to the maintaining agency. The door shall have a minimum of three hinges and be latchable. No screws to be used to attach door.
3. 480 Volt minimum rating bolt-in type breakers shall be used.
4. Busbar to be copper coated and have a minimum rating of 100 amps. When main breaker exceeds 100 amps busbar to match breaker amperage.
5. Locate Contactor, Transformer, P.E. Controller, and H.O.A. Switch inside enclosure. The enclosure to be sized to accomodate as many breakers as called for and all other service equipment.
6. The enclosure to be rigidly attached to the pole face.
7. A 600 Volt lightning protector shall be wired inside the enclosure.
8. A main breaker is required in all service panels with 2 or more feeder breakers.
9. All service equipment shall be U. L. approved.

NOTES:

1. Photo Electric Control as required.
2. All neutral wires to have White insulation, do not use White or Green insulated wires for ungrounded conductors.
3. A Pull Box is required at each service point.

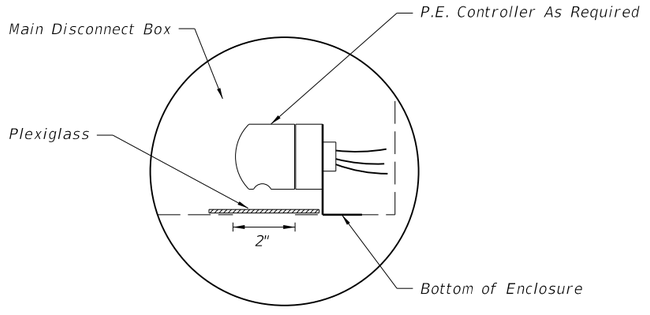

Cut a 2" hole in the bottom of the Main Disconnect Box for the operation and mounting of the P.E. controller. Use plexiglass and a clear silicone sealant to cover hole, install P.E. Controller.

PHOTO ELECTRIC CONTROLLER DETAIL

C:\d*projects\standards\roadway\17500-s\17504-01.dgn
rd960rh
2:18:34 PM
6/28/2012

LAST REVISION	REVISION	DESCRIPTION:		FDOT DESIGN STANDARDS 2013	SERVICE POINT DETAILS	INDEX NO.	SHEET NO.
11/18/09						17504	1

SIGN LIGHTING INSTALLATION

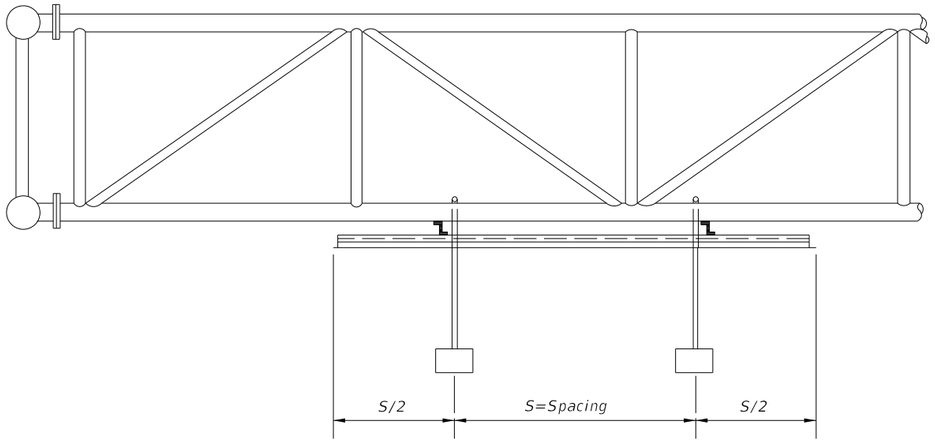

Roadway Lighting included in contract:

The power for the sign lighting shall be provided from the roadway lighting circuit. The lighting plans shall indicate the sign location and a pull box location for connection to the sign lights. The lighting contractor shall install pull box and loop 2' of lighting circuit conductors in the pull box for connection by the signing contractor

The signing contractor shall furnish and install luminaires, Nema 3R enclosure, 30 amp breaker, conduit, conductors and all other electrical equipment necessary for connection to the lighting circuit.

Roadway Lighting not included in contract:

The signing plans shall include pay item numbers to furnish and install conduit, conductors, ground rods, pull boxes and service point equipment. The signing plans shall indicate the location of the service point equipment and circuit runs. The signing contractor shall provide all electrical equipment necessary for connection of the sign lights.

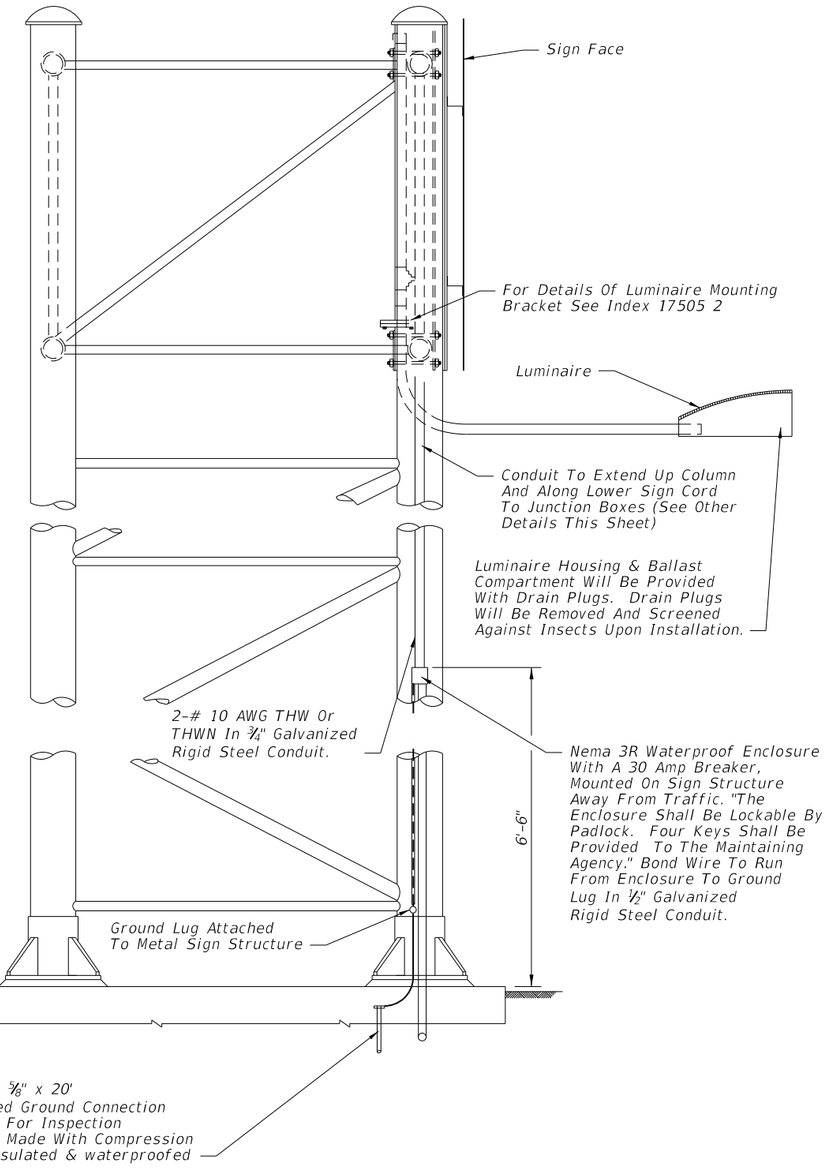

PLACEMENT OF SIGN LIGHTS

1. *Luminaire shall be mounted so the lamp center is 4' in front of the sign face.*
2. *Luminaire shall be mounted so the back of the fixture is placed 1' below the bottom edge of the sign face.*
3. *Luminaires from manufacturers who recommended their fixture be tilted shall be mounted on a bracket which provides this recommended tilt.*
4. *Photometric data for the Induction luminaire proposed for sign lighting shall be submitted for approval to the District Lighting Engineer, Florida Department Of Transportation.*

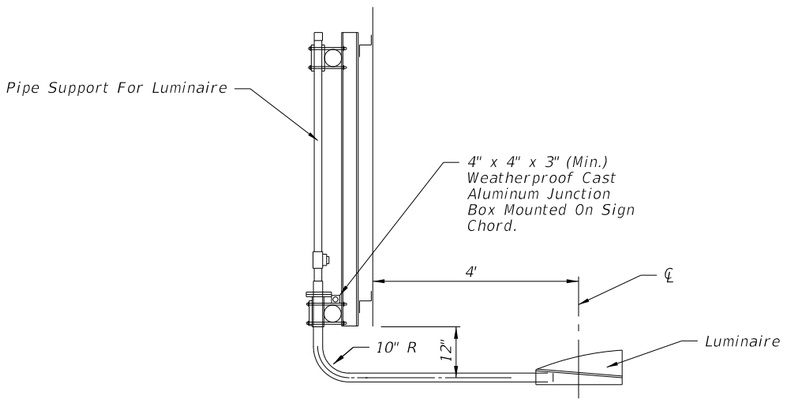

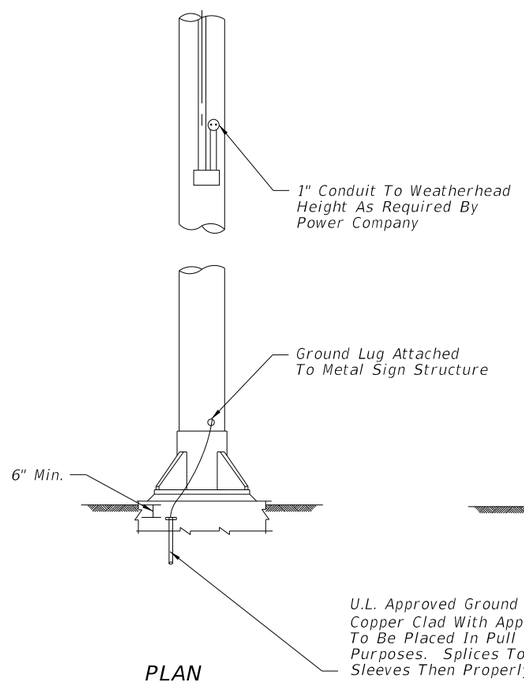

PLAN

OVERHEAD POWER SUPPLY

C:\d\projects\standards\roadway\17500-s\17505-01.dgn
rd960rh
2:18:37 PM
6/28/2012

LAST REVISION	REVISION	DESCRIPTION:		FDOT DESIGN STANDARDS 2013	EXTERNAL LIGHTING FOR SIGNS	INDEX NO.	SHEET NO.
01/01/12						17505	1

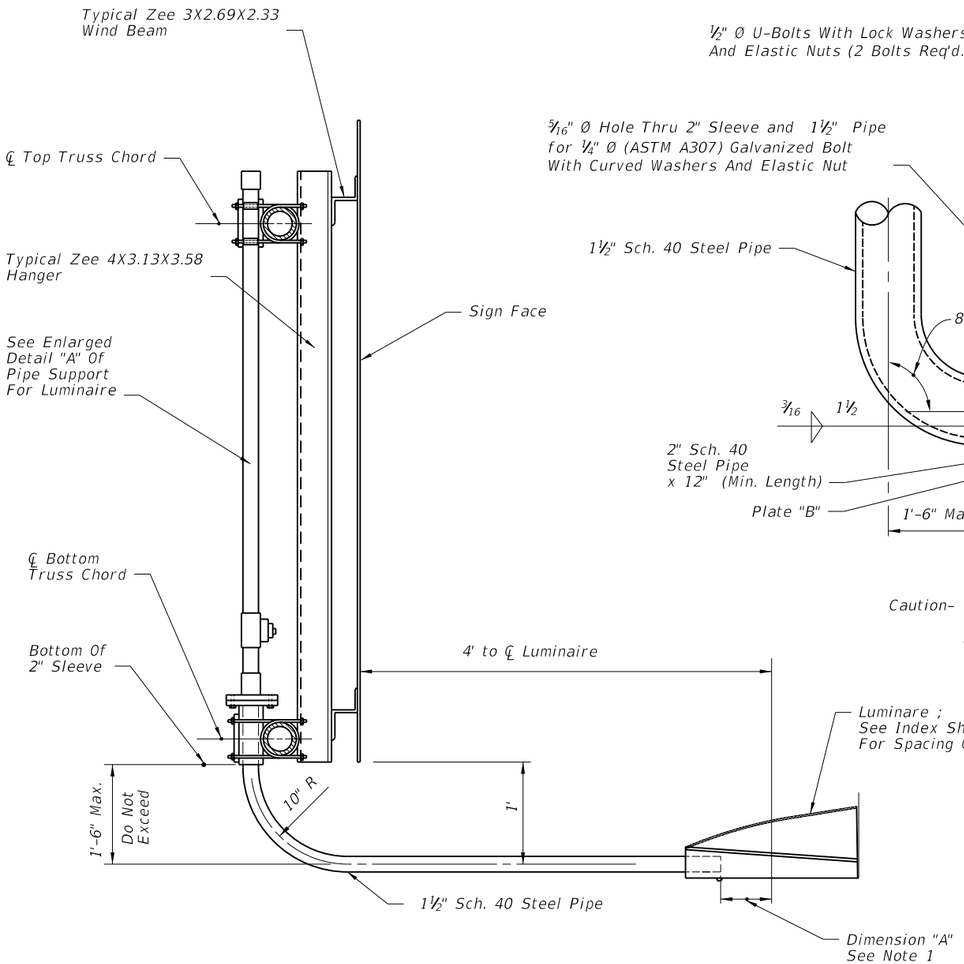

SECTION THROUGH SIGN SUPPORT AT LUMINAIRE

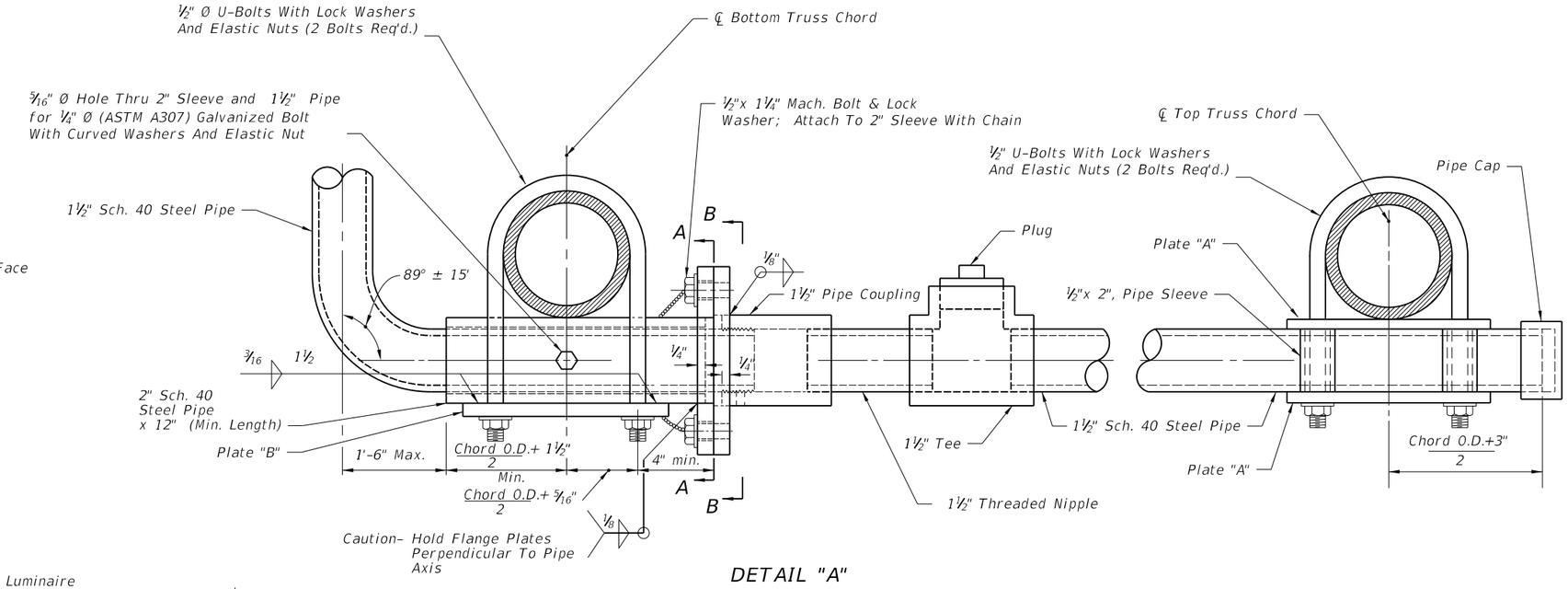

DETAIL "A"

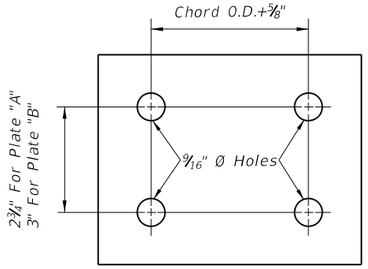

Plate "A": ¼" x 4¾" x Chord O.D.+2½"
Plate "B": ⅜" x 5" x Chord O.D.+2½"

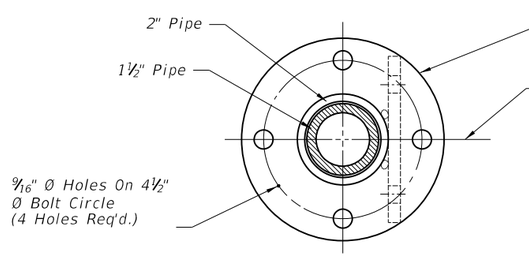

SECTION AA

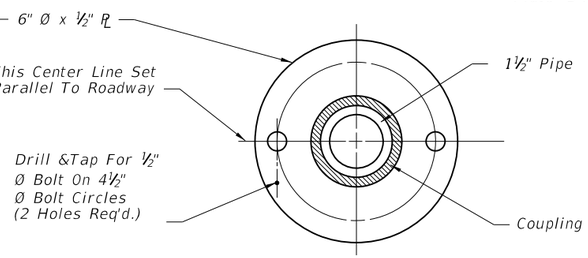

SECTION BB

NOTES

1 Dimension "A" to be established by type and make of luminaire to be purchased and used on the project.

2 The center lines of both flange plates and the luminaire support arm are to be set parallel to the roadway before the set screw is seated.

3 Minor adjustments in the horizontal location of the luminaire support arm along the bottom chord of the truss will be allowed so that the flange plates will clear the truss web members.

4 All steel pipe shall meet the strength requirements of ASTM Specification A53 Grade "A" or Grade "B". Steel plates shall meet the requirements of A36 and bolts, nuts and washers shall meet the requirements of ASTM A307.

5 All items shall be hot dip galvanized after fabrication in accordance with the requirements of ASTM A123 and /or A153.

6 Luminaire support arm shall be free to rotate in a clockwise or counter clockwise direction. When service or maintenance is required for sign face or vertical face of truss; Support arm shall be capable of being locked in a position 90° from parallel to the roadway for unobstructed working clearance.

C:\d\projects\standards\roadway\17500-s\17505-02.dgn rd960rh 2:18:39 PM 6/28/2012

LAST REVISION	REVISION	DESCRIPTION:			INDEX NO.	SHEET NO.
07/01/02			FDOT DESIGN STANDARDS 2013	EXTERNAL LIGHTING FOR SIGNS	17505	2

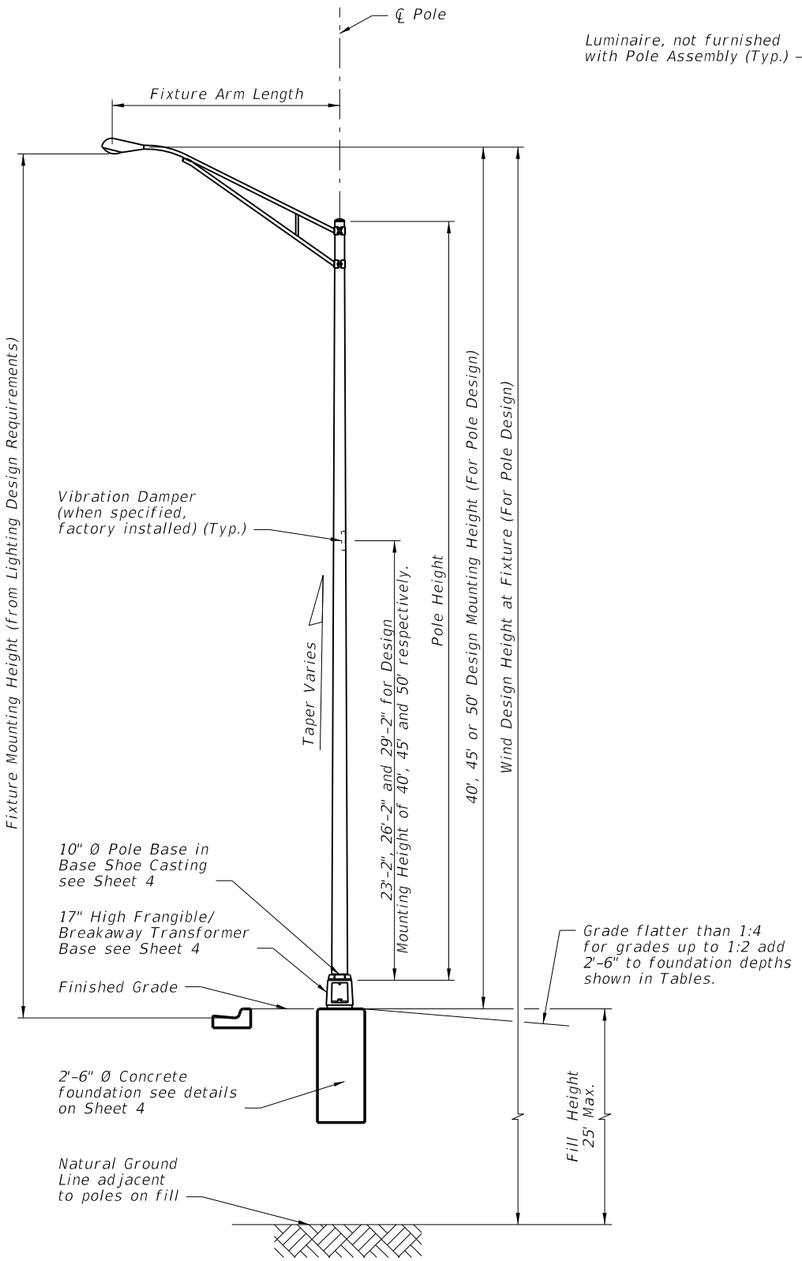

STANDARD ROADWAY
ALUMINUM LIGHT POLE

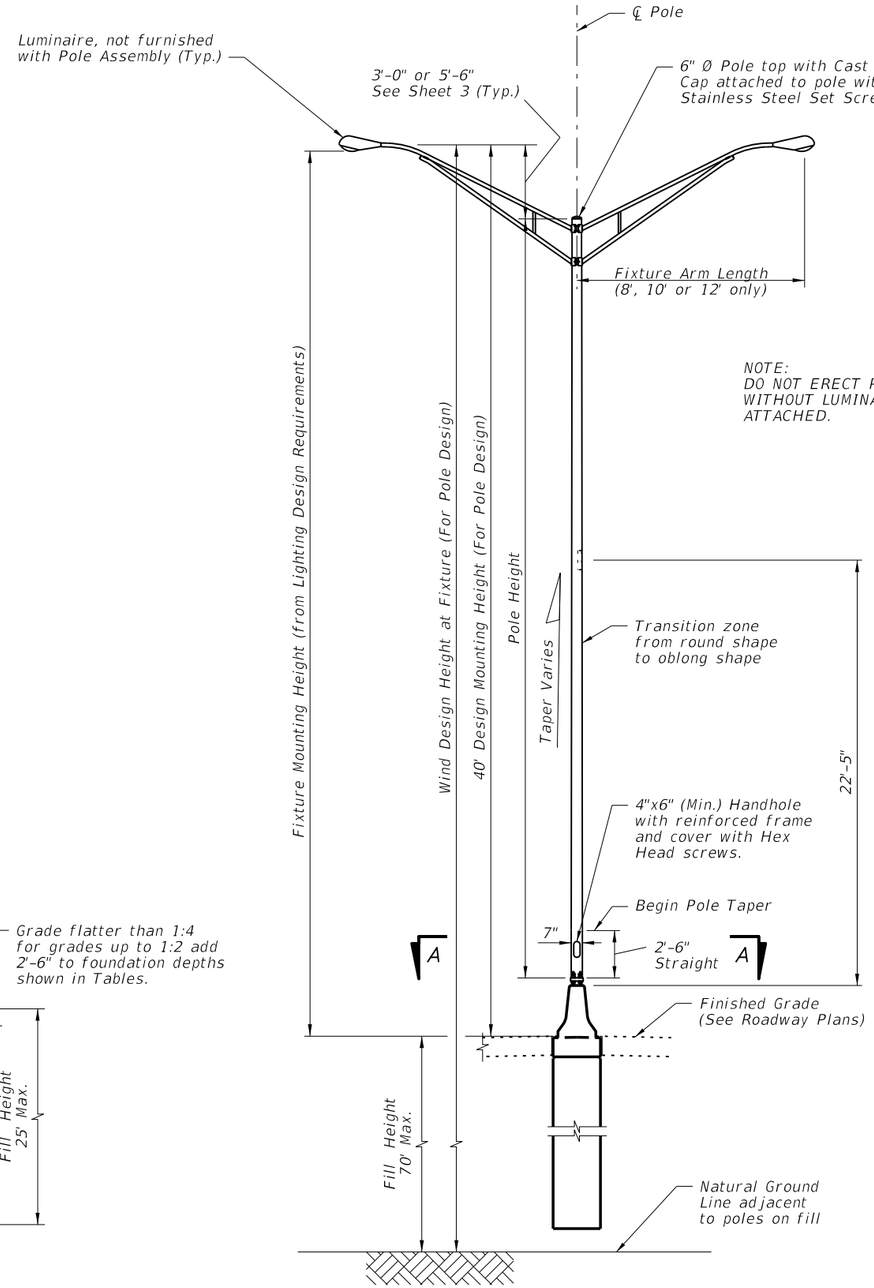

MEDIAN BARRIER MOUNTED ALUMINUM LIGHT POLE
ON CYLINDRICAL FOUNDATION

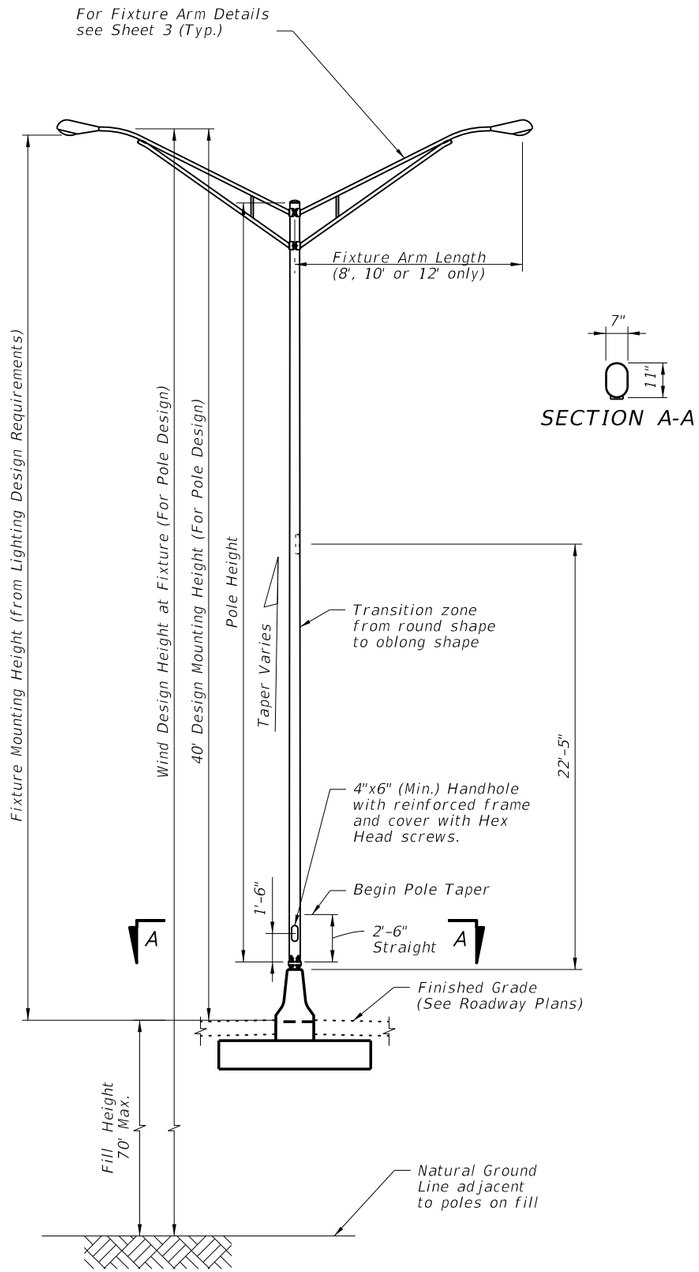

MEDIAN BARRIER MOUNTED ALUMINUM LIGHT POLE
ON SPREAD FOOTING FOUNDATION

ELEVATIONS

LAST REVISION	REVISION	DESCRIPTION:				
01/01/10			FDOT DESIGN STANDARDS 2013	STANDARD ALUMINUM LIGHTING	INDEX NO. 17515	SHEET NO. 1

6/28/2012 2:18:41 PM rd960rh C:\d\projects\standards\roadway\17500-s\17515-01.dgn

ALUMINUM LIGHT POLE GENERAL NOTES

1. Designed in accordance with FDOT Structures Manual.

2. All tables were developed assuming the following Luminaire properties: Effective Projected Area of 1.55 sq. ft. (includes wind drag coefficient) and 75 pounds (max.)

3. Perform all welding in accordance with the American Welding Society Structural Welding Code Aluminum ANSI/AWS D1.2 (current edition).

4. See Standard Index No. 17500 for grounding and wiring details.

5. Light Pole Specifications:
   a. Poles: ASTM B221, Alloy 6063-T6.
   b. Arm Tube Extrusions: ASTM B221 – Alloy 6063-T6.
   c. Finish: For pole and arms; 50 grit satin rubbed finish.
   d. Pole Connection Extrusions, Bars and Plates: ASTM B221 – Alloy 6063-T6.
   e. Aluminum Caps and Covers: ASTM B-26(319-F).
   f. Weld Metal: ER4043.
   g. Stainless Steel Fasteners and Hardware: AISI Grade 304.
   h. Aluminum alloy 6063: T4 condition and heat treated in accordance with ASTM B597 to T6.
   i. Frangible Base: ASTM B26 Alloy 356-T6 or ASTM 108 Alloy 356-T6.

6. Provide "J", "S" or "C" hook at top of pole for electrical cable.

7. Furnish each pole with a 2"x4" (max) aluminum identification tag. Submit details for approval. Secure to Transformer Base with 0.125" stainless steel rivets or screws. Locate Identification Tag on the inside of base and visible from the door opening. Include the following information: Financial Project ID, Pole Height and Manufacturer's Name.

8. For Clamp and Frangible Transformer Base Design, certify that the components are capable of providing the required capacity. Certify that the frangible Transformer Base conforms to the current FHWA required AASHTO Frangibility Requirements, tested under NCHRP Report 350 Guidelines (eg. Akron Foundry TB1-17).

9. For Median Barrier Mounted Aluminum Light Pole design, submit test results showing that pole will not buckle at pole shape transition area. Demonstrate in the tests that the poles will achieve full ultimate moment capacity of 36 k-ft in the strong axis and 30 k-ft in the weak axis respectively for the 0.25" thick poles, and 44 k-ft in the strong axis and 37 k-ft in the weak axis respectively for the 0.313" thick poles. Submit complete details and calculations for the reinforced 4"x6" (min.) handhole located 1'-6" above the base plate.

10. In accordance with specification 5-1.4.2, shop drawings are only required for additions, deletions or modifications to this design standard.

ROADWAY ALUMINUM LIGHTING POLE NOTES

1. Foundation Materials:
   a. Reinforcing Steel: ASTM A615 Grade 60.
   b. Concrete: Class I.
   c. Anchor Bolts: ASTM F1554 Grade 55 with ASTM A563 Grade DH nuts and ASTM F436 Type 1 washers (all galvanized in accordance with ASTM F2329).

2. Shoe Base and Frangible/Breakaway Transformer Base Casting Specifications.
   a. Shoe Base Casting: ASTM B26 – Alloy 356-T6 or ASTM B108 – Alloy 356-T6.
   b. Frangible/Breakaway Transformer Base Casting: ASTM B26 – Alloy 356-T6 or ASTM B108 – Alloy 356-T6.
   c. Shoe Base Connection Bolts: ASTM A325 Type 1 with ASTM A563 Grade DH nuts and ASTM F436 Type 1 washers (all galvanized in accordance with ASTM F2329).

3. Pole Notes:
   a. Tapered as required to provide a top outside diameter (O.D.) of 6" with a base O.D. of 10". Portions of the shaft near the base shoe and at the arm connections may be held constant at 10" and 6" respectively to simplify fabrication.
   b. Transverse welds are allowed only at the base.
   c. Poles constructed out of two or more sections with overlapping splices are not permitted.
   d. Equip poles with a vibration damper at locations per Specification Section 715.

MEDIAN BARRIER MOUNTED ALUMINUM LIGHT POLE

1. Foundation Materials:
   a. Reinforcing Steel: ASTM A615 Grade 60.
   b. Concrete: Class I.
   c. Anchor Bolts: ASTM F1554 Grade 55 with ASTM A563 Grade DH nuts and ASTM A36 Plate Washer or ASTM F436 Type 1 washers (all galvanized in accordance with ASTM F2329). Coupler shall be in accordance with AASHTO 5.11.5.2.2.

2. Base Connection Materials:
   a. Aluminum Base Plate and Stiffener: Alloy 6061-T6.
   b. Backer Ring: ASTM B221, Alloy 6063-T6.
   c. Bearing Plate for Anchor Bolts: ASTM A709 Grade 36 or ASTM A36.

3. Pole Notes:
   a. Tapered as required to provide a 6" (O.D.) round top with a 11"x7" (O.D.) oblong base. Portions of the shaft near the base and at the arm connections may be held constant at 11"x7" oblong and 6" round respectively to simplify fabrication.
   b. Transverse welds are allowed only at the base.
   c. Poles constructed out of two or more sections with overlapping splices are not permitted.
   d. Equip poles with a damping device.

FOUNDATION NOTES

The foundations for Standard Roadway Aluminum Light Poles are pre-designed and are based upon the following conservative soil criteria which covers the majority of soil types found in Florida:

Classification = Cohesionless (Fine Sand)
Friction Angle = 30 Degrees (30°)
Unit Weight = 50 lbs./cu. ft. (assumed saturated)

Only in cases where the Designer considers the soil types at the specific site location to be of lesser strength properties should an analysis be required. Auger borings, SPT borings or CPT soundings may be utilized as needed to verify the assumed soil properties, and at relatively uniform sites, a single boring or sounding may cover several foundations. Borings in the area that were performed for other purposes may be used to confirm the assumed soil properties.

PULL BOX NOTES

1. Fabricate pull boxes from ASTM A 36 steel and hot-dip galvanized in accordance with ASTM A 123 after fabrication. All seams shall be continuously welded and ground smooth. Provide watertight cover with neoprene gasket and secure cover with galvanized screws.

2. Completed pull box and conduit risers are incidental to the cost of concrete barrier wall.

NOTES

6/28/2012 2:18:43 PM rd960rh C:\d\projects\standards\roadway\17500-s\17515-02.dgn

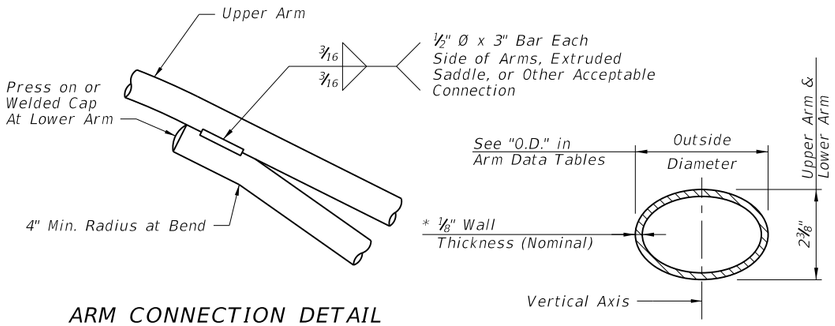

ARM CONNECTION DETAIL

ARM SECTION

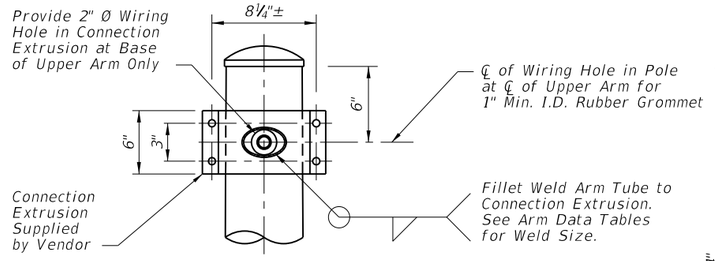

SECTION A-A
(Connection At Lower Arm Similar)

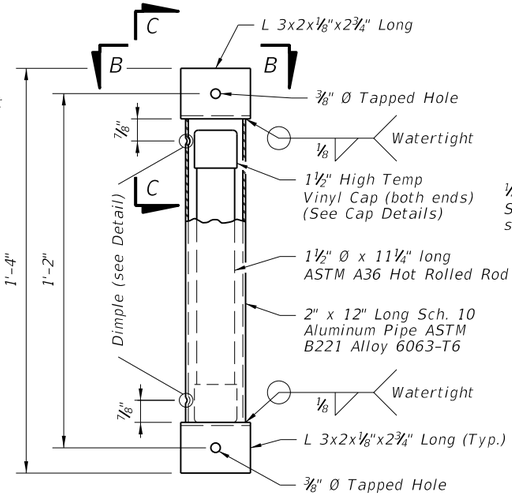

VIBRATION DAMPER ELEVATION

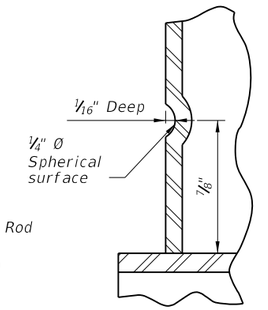

DIMPLE DETAIL

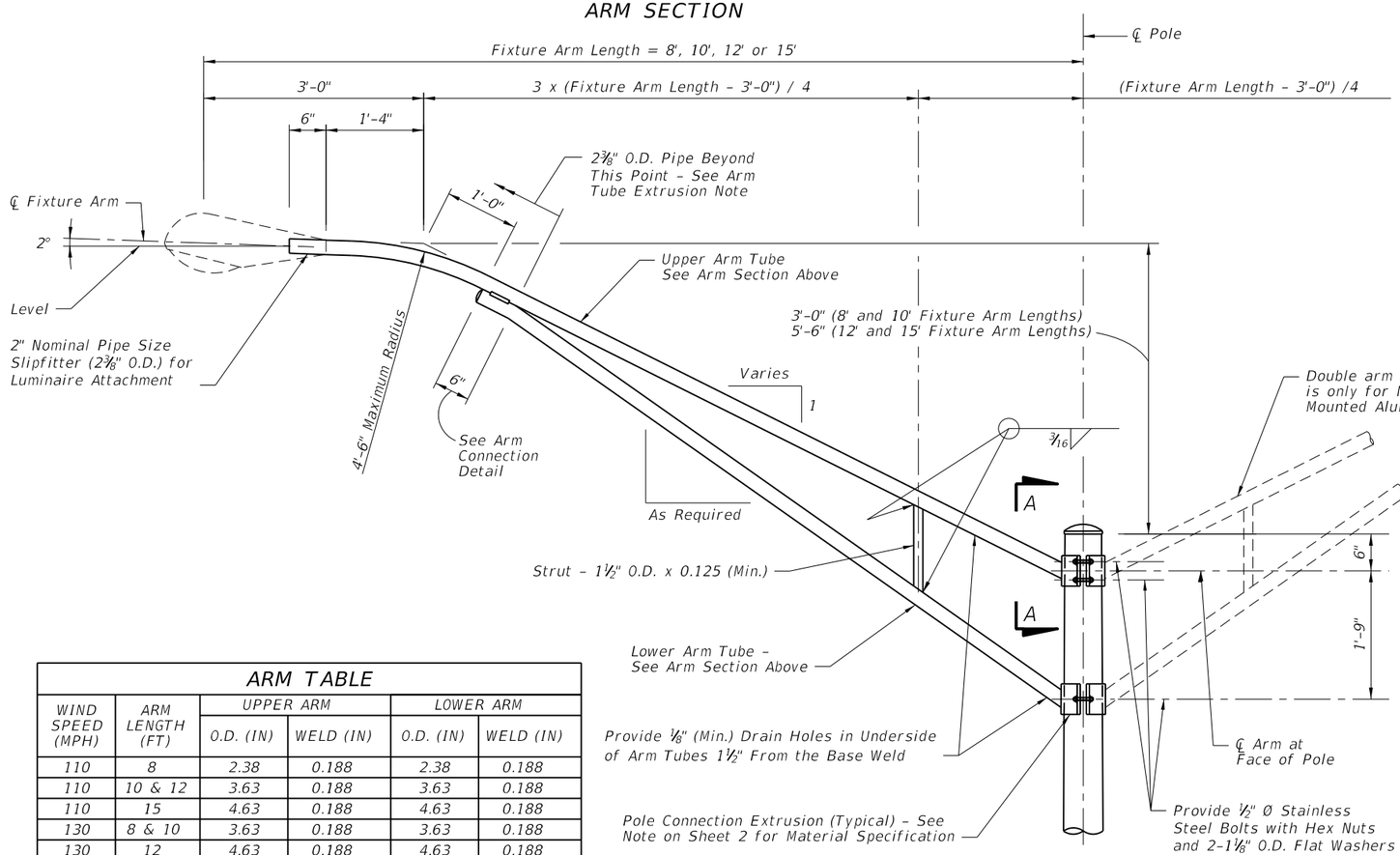

ARM ELEVATION

ARM TABLE					
WIND SPEED (MPH)	ARM LENGTH (FT)	UPPER ARM		LOWER ARM	
		O.D. (IN)	WELD (IN)	O.D. (IN)	WELD (IN)
110	8	2.38	0.188	2.38	0.188
110	10 & 12	3.63	0.188	3.63	0.188
110	15	4.63	0.188	4.63	0.188
130	8 & 10	3.63	0.188	3.63	0.188
130	12	4.63	0.188	4.63	0.188
130	15	4.63	0.25	4.63	0.25
150	8	3.63	0.188	3.63	0.188
150	10	3.63	0.250	3.63	0.250
150	12	4.63	0.250	4.63	0.250
150	15	4.63	0.313	4.63	0.313

* Increase Member Wall Thickness as Necessary to Meet Minimum Requirements of the Welding Code for the Connection Weld Sizes Shown in the Arm and Pole Tables.

VIEW B-B

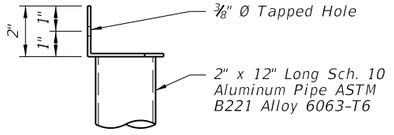

VIEW C-C

HIGH TEMP VINYL CAP DETAIL

ARM TUBE EXTRUSIONS NOTES:

At the pole connections, provide arm tube extrusions with dimensions as shown in the ARM SECTION and as tabulated in the ARM DATA Tables. Uniformly transition elliptical section to a cylindrical section at the arm connection.

The fabricator may substitute elliptical cross sections other than those tabulated, provided the section properties about the vertical axis and the area of the section equal or exceed that of the required section, and provide minimum wall thickness of ⅛" nominal and within the Aluminum Association Tolerances.

The outside diameter about the minor axis should be held at 2⅜" at the upper and lower arms.

ARM & DAMPER DETAILS

C:\d\projects\standards\roadway\17500-s\17515-03.dgn rd960rh 2:18:46 PM 6/28/2012

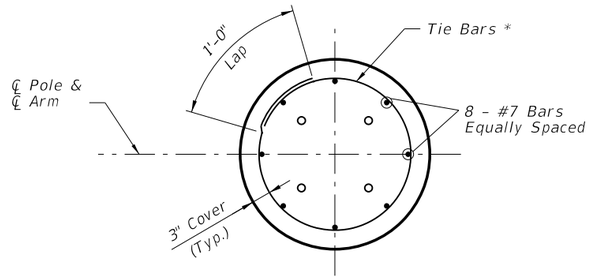

SECTION C-C

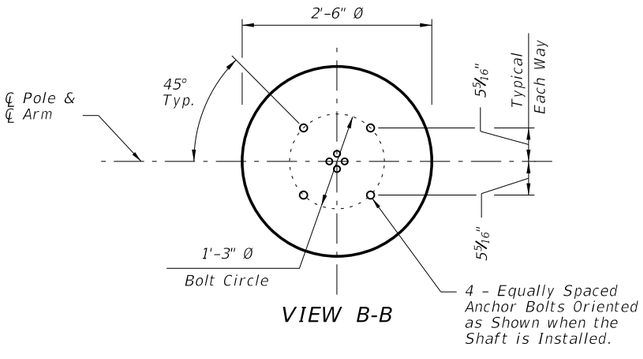

VIEW B-B

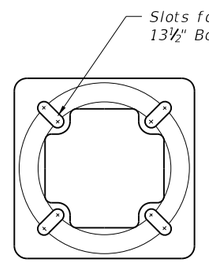

TOP VIEW
TRANSFORMER BASE

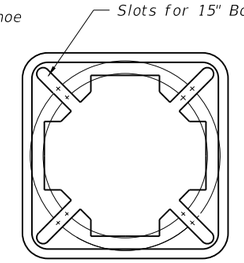

BOTTOM VIEW
TRANSFORMER BASE

POLE TABLE					
WIND SPEED (MPH)	ARM LENGTH (FT)	DESIGN MOUNTING HEIGHT (FT)	POLE WALL (IN)	UPPER WELD (IN)	LOWER WELD (IN)
110	8, 10, 12 & 15	40 & 45	0.156	0.156	0.156
110	8, 10, 12 & 15	50	0.188	0.188	0.188
130	8, 10 & 12	40	0.156	0.156	0.156
130	15	40	0.188	0.188	0.188
130	8, 10, & 12	45	0.188	0.188	0.188
130	15	45	0.250	0.250	0.250
130	8, 10, 12 & 15	50	0.250	0.250	0.250
150	8, 10, & 12	40	0.188	0.188	0.188
150	15	40	0.250	0.250	0.250
150	8, 10, 12 & 15	45	0.250	0.250	0.250
150	8, 10, 12 & 15	50	0.313	0.313	0.313

NOTE:
Pole wall thicknesses shown in the POLE TABLE are nominals and shall be within the Aluminum Association Tolerances. Thicker walls are permitted and tapered walls may be used provided the minimum Aluminum Association thicknesses are not violated.

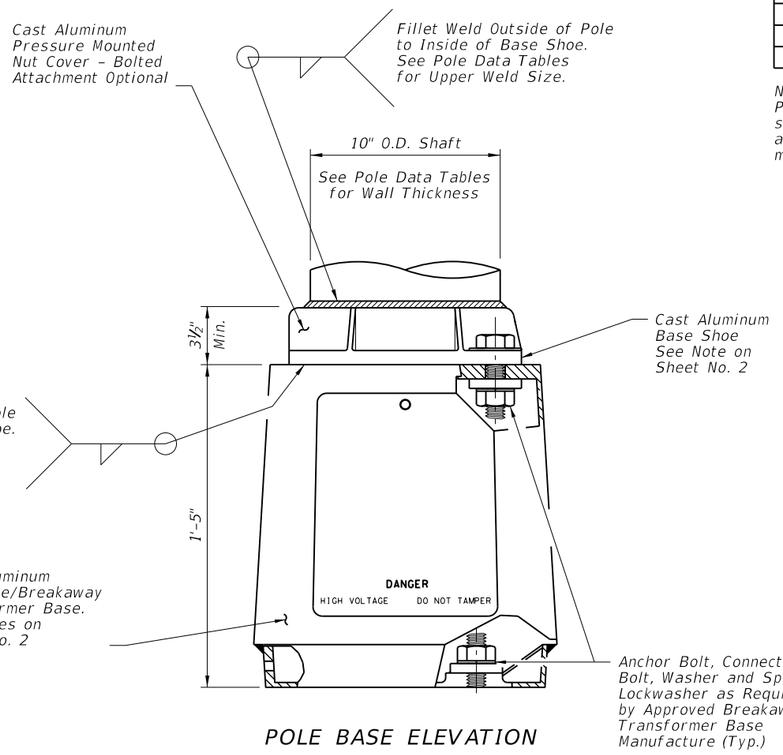

POLE BASE ELEVATION

FOUNDATION TABLE		
WIND SPEED (MPH)	DESIGN MOUNTING HEIGHT (FT)	TOTAL DEPTH (FT) **
110	40	7
110	45 & 50	8
130	40 & 45	8
130	50	9
150	40 & 45	9
150	50	10

** Depths shown in table are for grades flatter than 1:4, for grades up to 1:2 add 2'-6" to foundation depths shown in table.

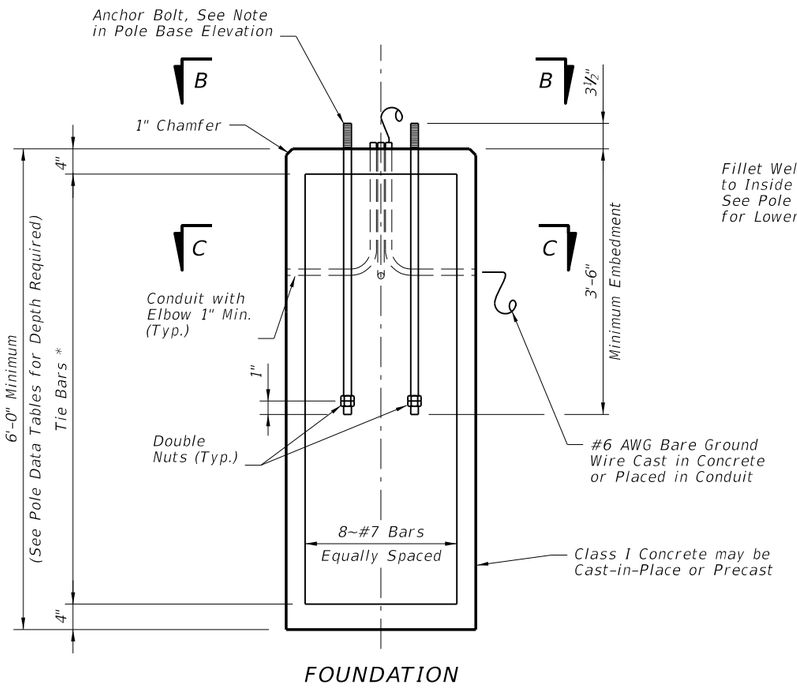

FOUNDATION

* 1. Shop-weld assemblies of foundation stirrup reinforcing bars are permitted in reinforced concrete foundation provided that:
   a. The reinforcing bars conform to ASTM Specification A706/706M.
   b. The holding wires conform to ASTM Specification A1064.
   c. The Shop welding is performed by machines under a continuous, controlled process, approved by the Engineer.
   d. Quality control yield strength and tensile strength tests are performed on shop-welded specimens and the test results are available, upon request, to the Engineer.
2. #4 Tie Bars @ 12" centers (max.) or D10 (or W10) spiral @ 6" pitch, 3 flat turns top and 1 flat turn bottom.

BASE DETAILS FOR ROADWAY ALUMINUM LIGHT POLE

LAST REVISION	REVISION	DESCRIPTION:				
01/01/11			FDOT DESIGN STANDARDS 2013	STANDARD ALUMINUM LIGHTING	INDEX NO. 17515	SHEET NO. 4

6/28/2012 2:18:48 PM rd960rh C:\d\projects\standards\roadway\17500-s\17515-04.dgn

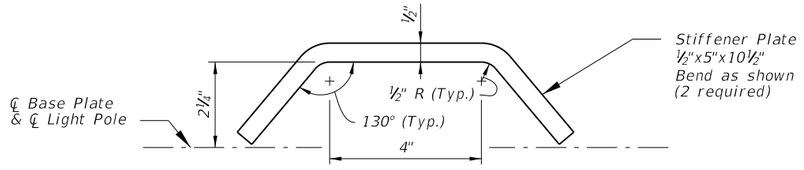

STIFFENER PLATE DETAIL

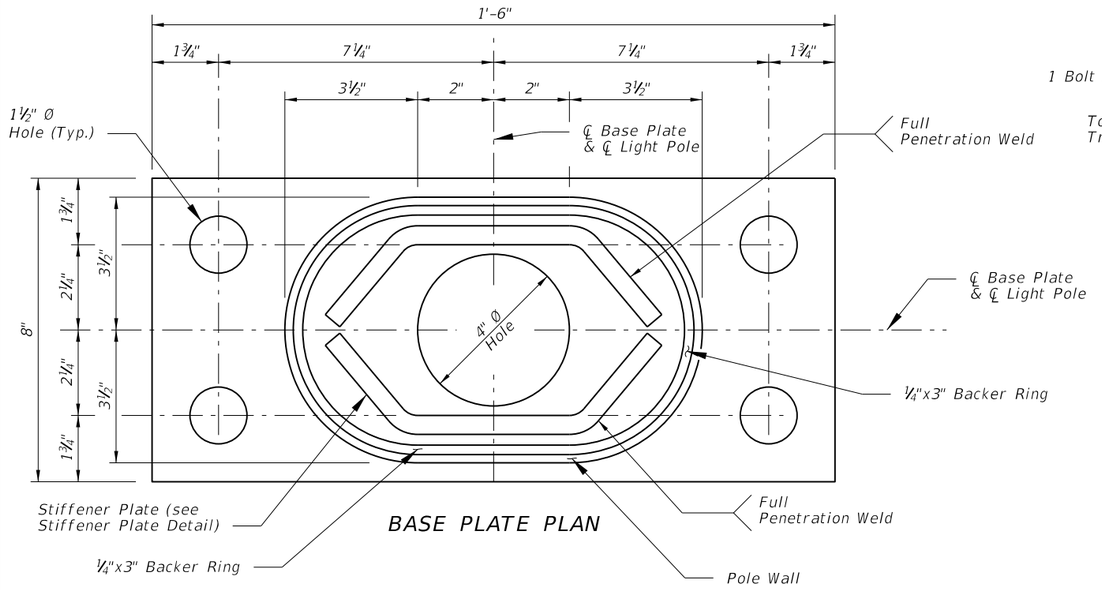

BASE PLATE PLAN

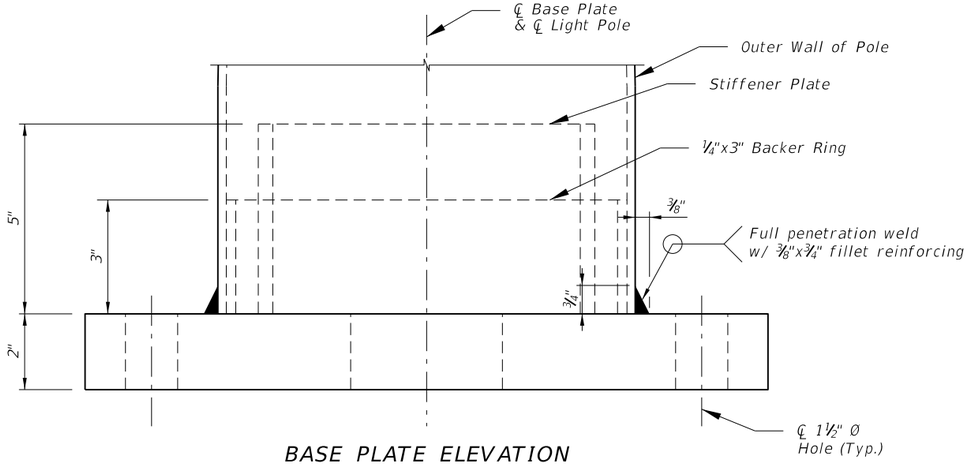

BASE PLATE ELEVATION

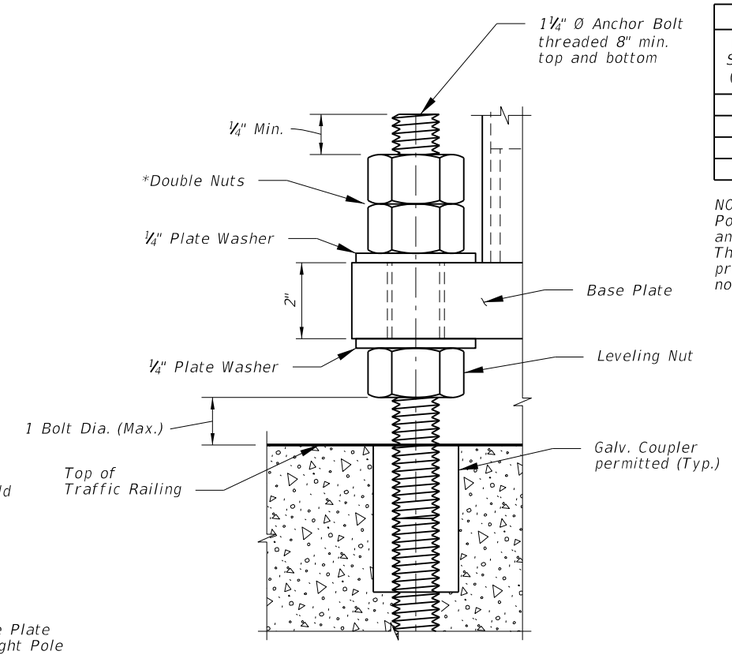

DETAIL 'A'

*Top nut may be ½ height
Jam Nut. Provide individual nut
cover (not shown) for each bolt.

POLE TABLE				
WIND SPEED (MPH)	ARM LENGTH (FT)	DESIGN MOUNTING HEIGHT (FT)	POLE WALL (IN)	FILL HEIGHT (FT)
110	8, 10, 12	40	0.25	Up to 70'
130	8, 10, 12	40	0.25	Up to 70'
150	8, 10, 12	40	0.25	Up to 20'
150	8, 10, 12	40	0.313	>20' to 70'

NOTE:
Pole wall thicknesses shown in the POLE TABLE are nominals and shall be within the Aluminum Association Tolerances. Thicker walls are permitted and tapered walls may be used provided the minimum Aluminum Association thicknesses are not violated.

NOTE:
For locations of Bearing Plates, Base Plates and Detail 'A' see Sheets 6 & 7.

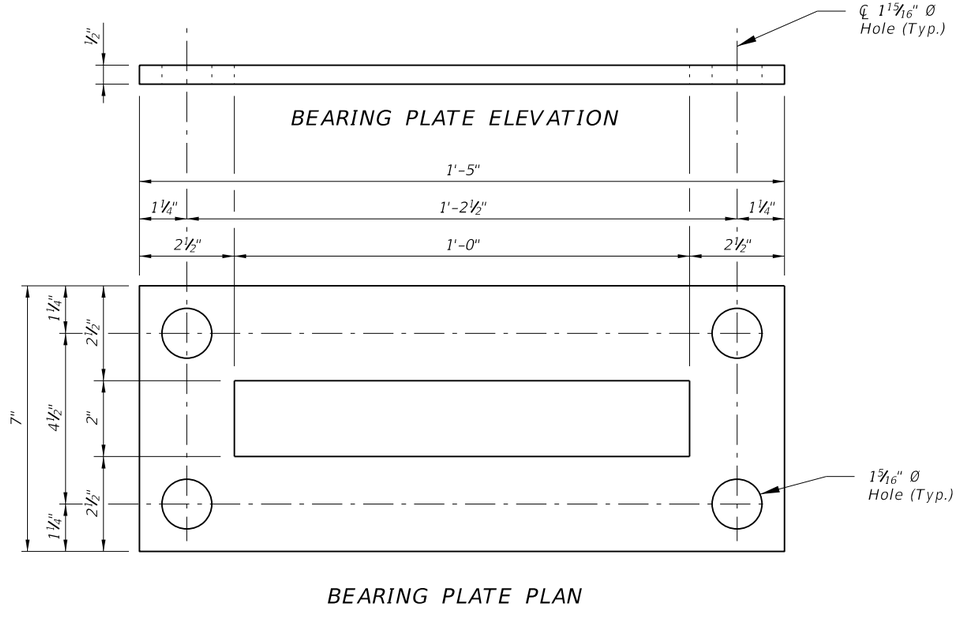

BEARING PLATE PLAN

BASE PLATE DETAILS FOR MEDIAN BARRIER MOUNTED ALUMINUM LIGHT POLE

LAST REVISION	REVISION	DESCRIPTION:		FDOT DESIGN STANDARDS 2013	STANDARD ALUMINUM LIGHTING	INDEX NO.	SHEET NO.
07/01/09						17515	5

6/28/2012 2:18:50 PM rd960rh C:\d\projects\standards\roadway\17500-s\17515-05.dgn

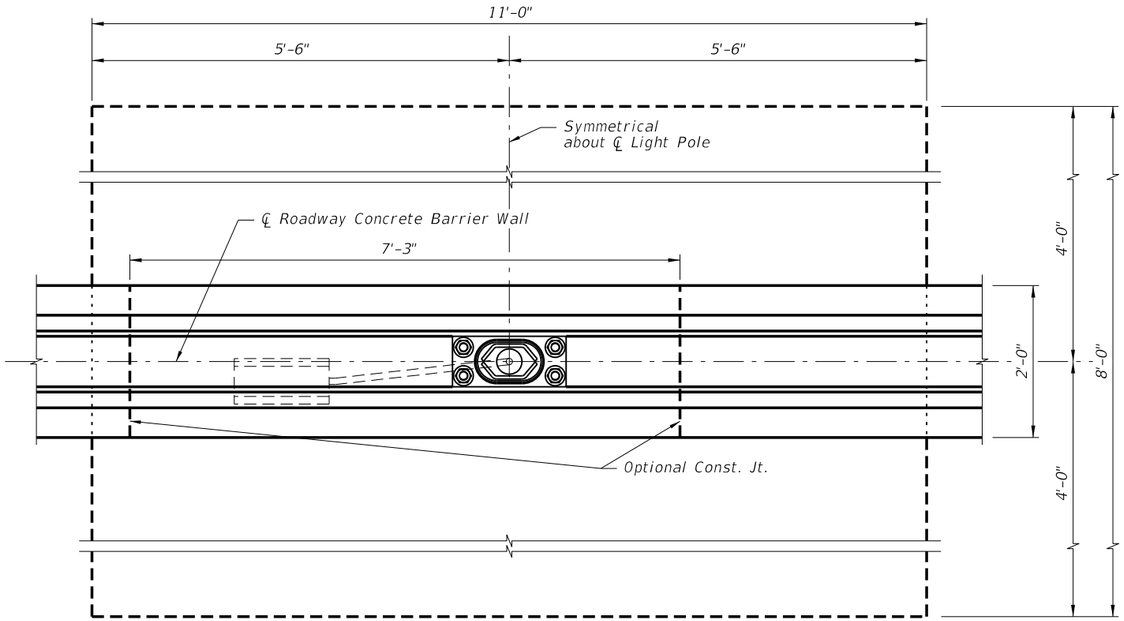

Provide dowel bars
@ construction joint

PLAN
(Reinforcing steel not shown)

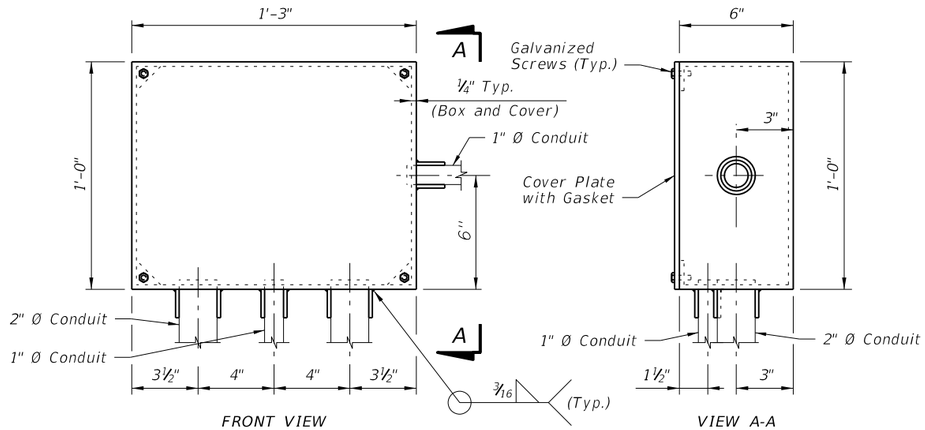

PULL BOX DETAILS

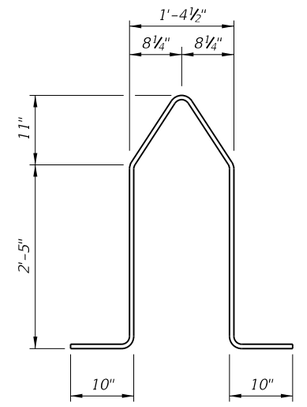

BARS 5W1

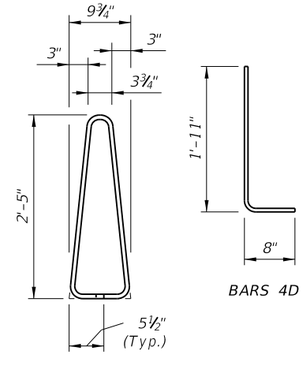

BARS 4D

BARS 5R

BAR BENDING DIAGRAMS

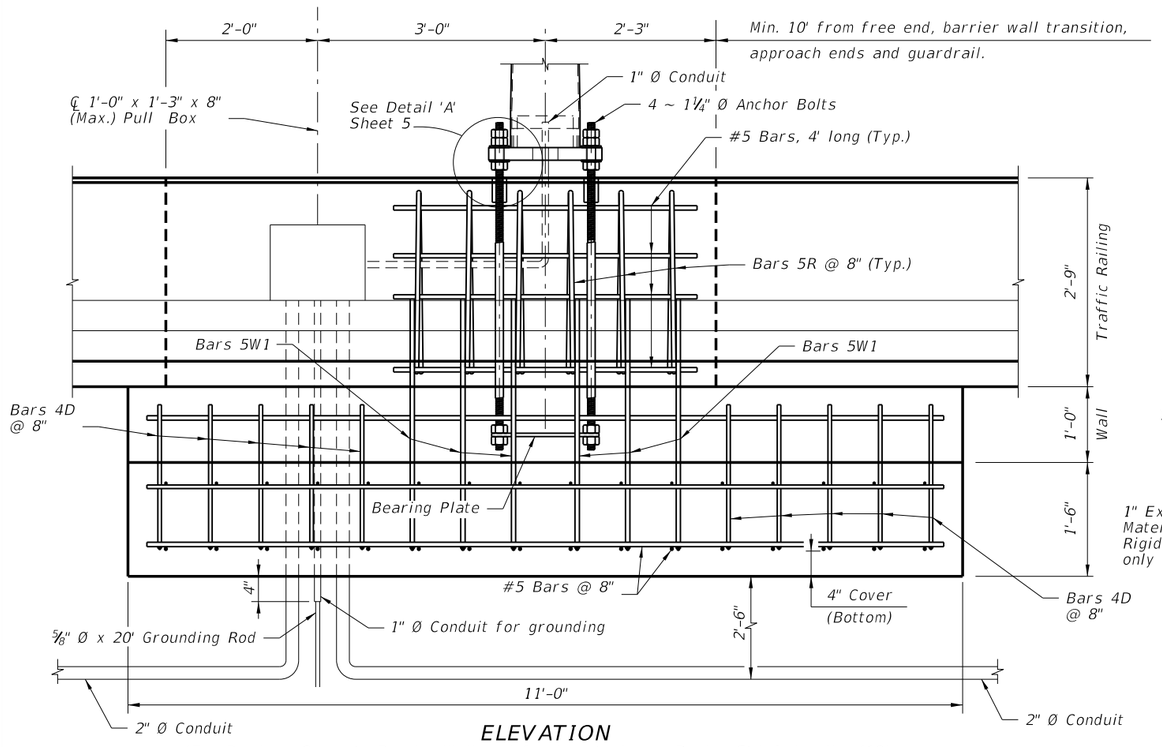

ELEVATION
(For Roadway Concrete Barrier Wall reinforcing steel see Design Std. Index No. 410)

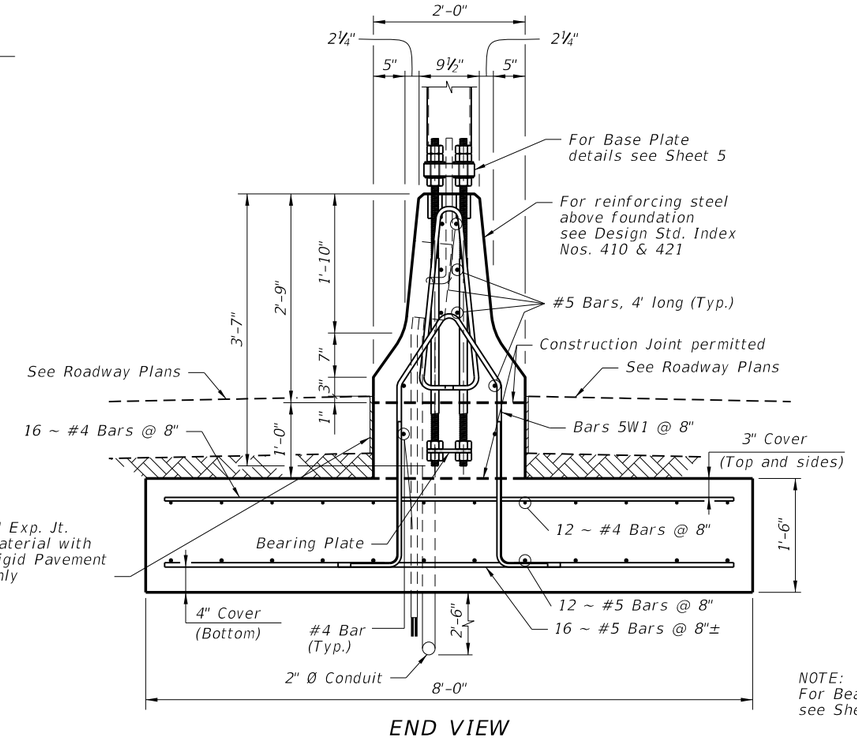

END VIEW

NOTE:
For Bearing Plate Details
see Sheet 5.

SPREAD FOOTING DETAILS FOR MEDIAN BARRIER MOUNTED ALUMIMUM LIGHT POLE

LAST REVISION	REVISION	DESCRIPTION:				
07/01/09			FDOT DESIGN STANDARDS 2013	STANDARD ALUMINUM LIGHTING	INDEX NO. 17515	SHEET NO. 6

C:\d\projects\standards\roadway\17500-s\17515-06.dgn
rd960rh
2:18:53 PM
6/28/2012

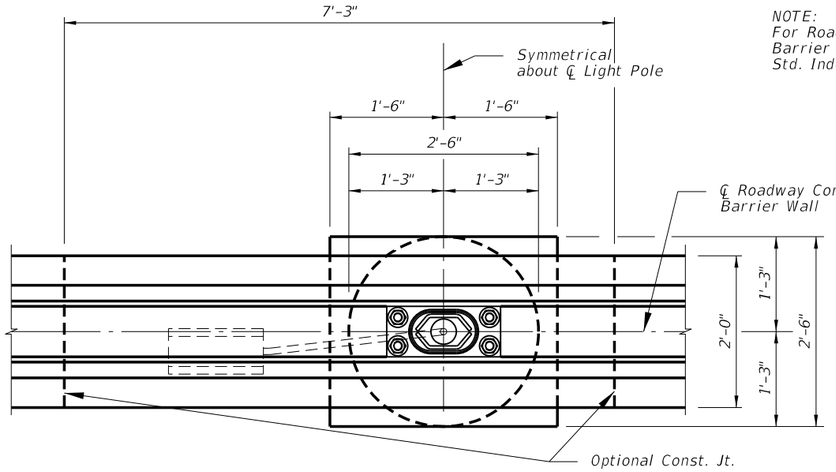

PLAN

(Reinforcing steel not shown)

Provide dowel bars @ construction joint

NOTE:
For Roadway Concrete Barrier Wall see Design Std. Index 410

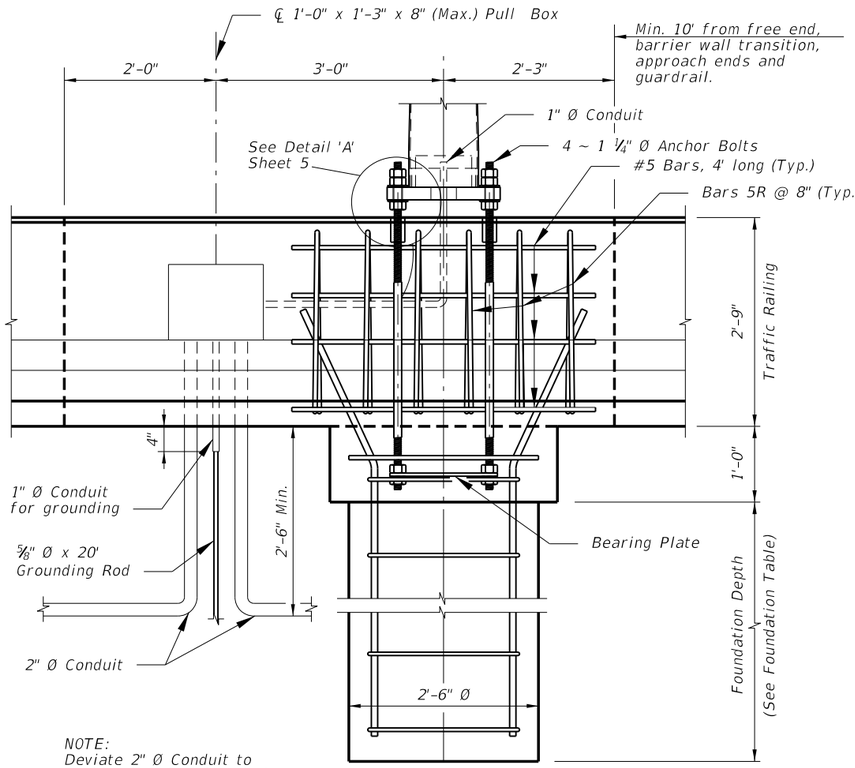

ELEVATION

(For Roadway Concrete Barrier Wall reinforcing steel see Design Std. Index No. 410)

NOTE:
Deviate 2" Ø Conduit to avoid cylindrical foundation.

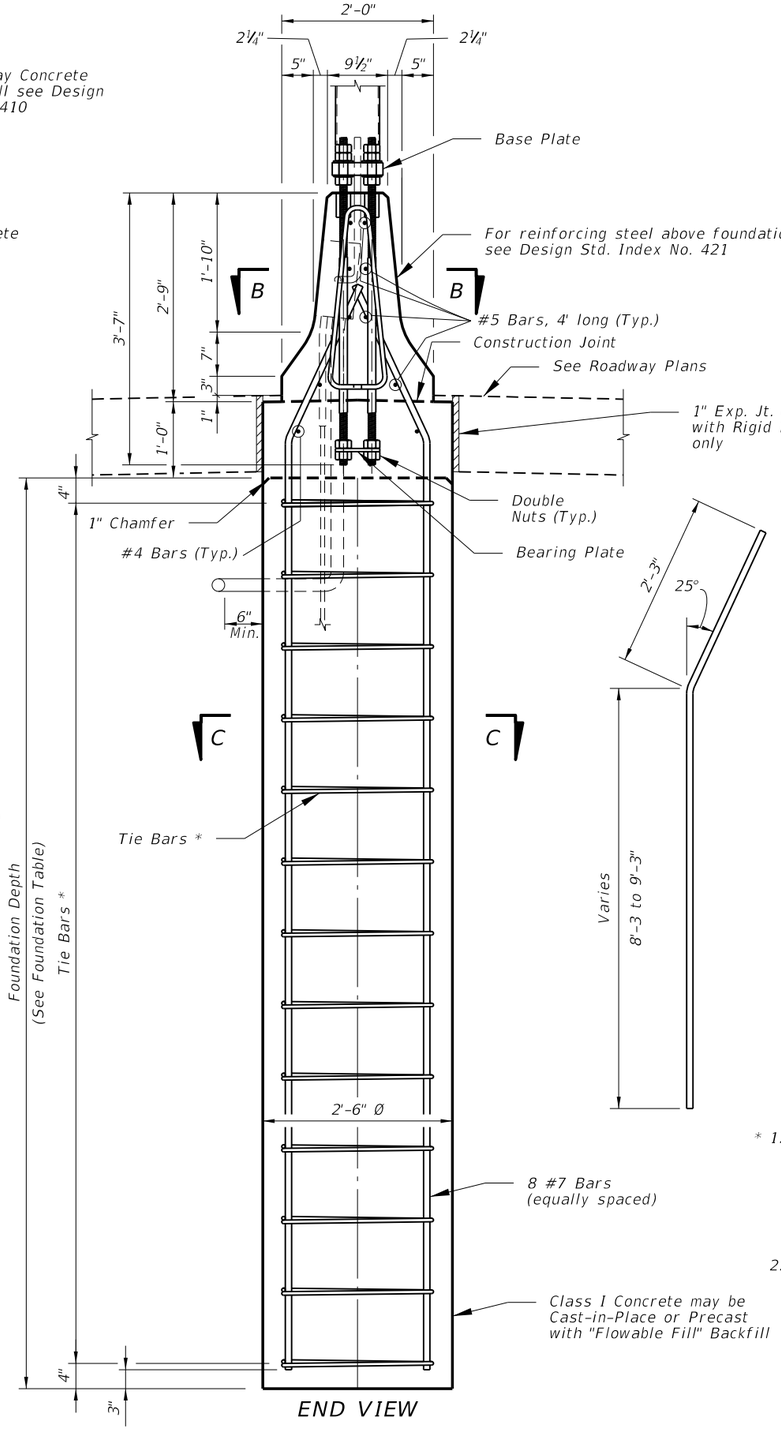

END VIEW

NOTE:
For Base Plate Details, Bearing Plate Detail and Detail 'A' see Sheet 5

FOUNDATION TABLE		
WIND SPEED (MPH)	DESIGN MOUNTING HEIGHT (FT)	FOUNDATION DEPTH (FT)
110	40	8
130	40	9
150	40	9

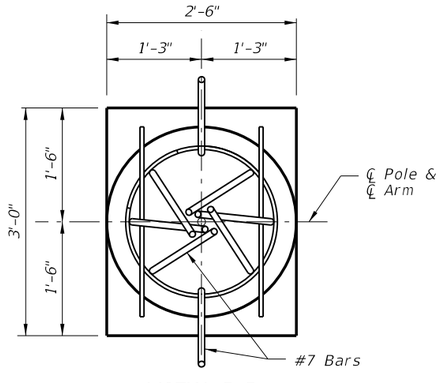

VIEW B-B

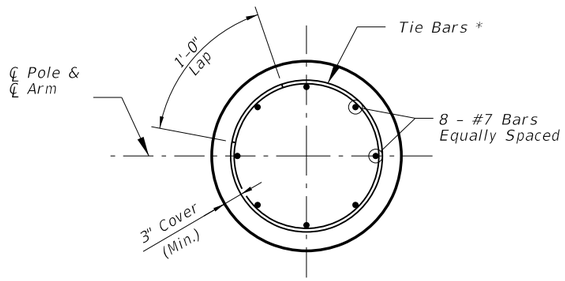

SECTION C-C

* 1. Shop-weld assemblies of foundation stirrup reinforcing bars are permitted in reinforced concrete foundation provided that:
   a. The reinforcing bars conform to ASTM Specification A706/706M.
   b. The holding wires conform to ASTM Specification A82 or A496.
   c. The Shop welding is performed by machines under a continuous, controlled process, approved by the Engineer.
   d. Quality control tests are performed on shop-welded specimens and the test results are available, upon request, to the Engineer.
2. #4 Tie Bars @ 12" centers (max.) or D10 (or W10) spiral @ 6" pitch, 3 flat turns top and 1 flat turn bottom.

CYLINDRICAL FOUNDATION DETAILS FOR MEDIAN BARRIER MOUNTED ALUMINUM LIGHT POLE

LAST REVISION	REVISION	DESCRIPTION:		FDOT DESIGN STANDARDS 2013	STANDARD ALUMINUM LIGHTING	INDEX NO.	SHEET NO.
07/01/09			STATE OF FLORIDA DEPARTMENT OF TRANSPORTATION			17515	7

C:\d\projects\standards\roadway\17500-s\17515-07.dgn rd960rh 2:18:55 PM 6/28/2012

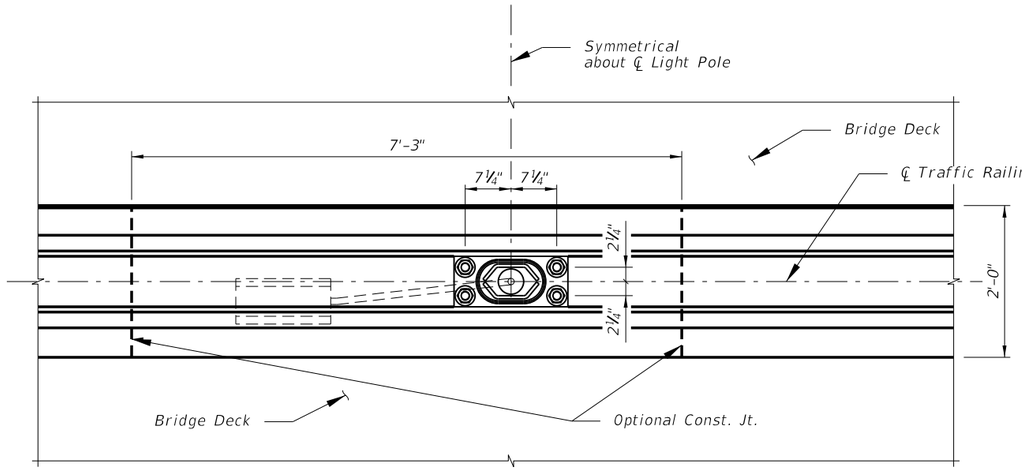

PLAN
(Reinforcing steel not shown)

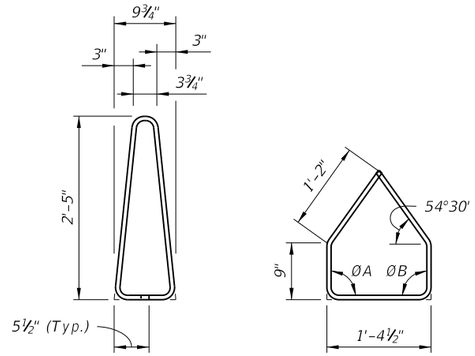

BARS 5R BARS 5W

BAR BENDING DIAGRAMS

INSTRUCTIONS TO DESIGNER:

In order to minimize vibration of light poles due to traffic, locate light poles near substructure supports.

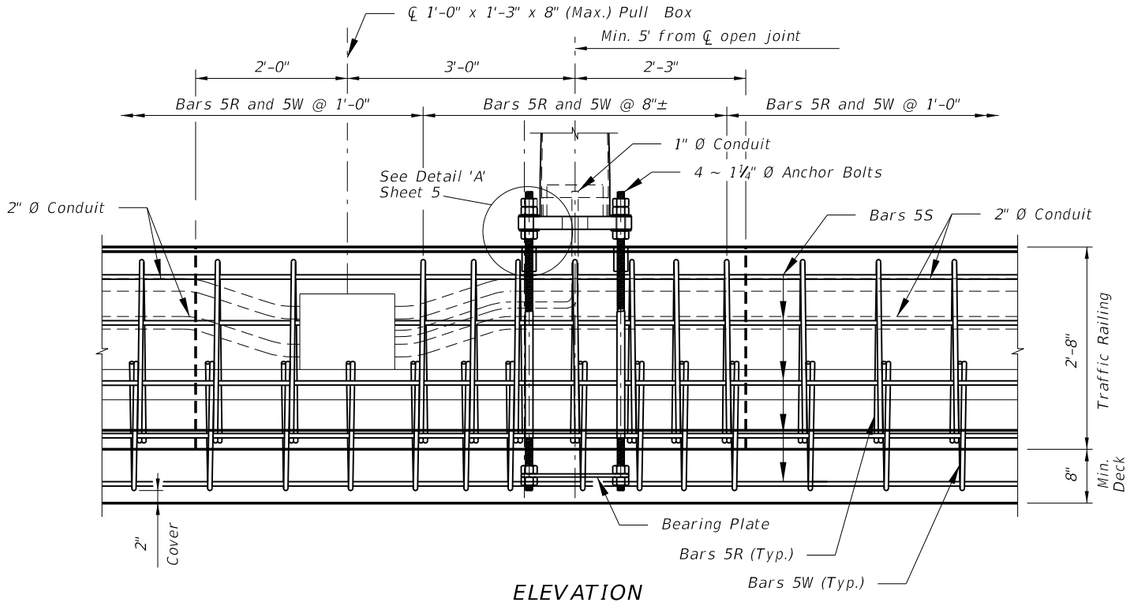

ELEVATION
(Longitudinal and transverse deck reinforcing steel not shown)

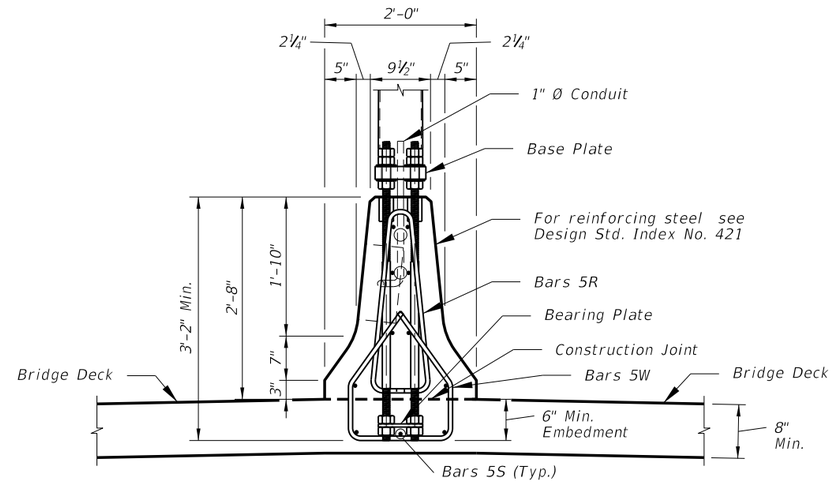

END VIEW
(Longitudinal and transverse deck reinforcing steel not shown)

NOTES:
1. For Base Plate Details, Bearing Plate Details and Detail 'A' see sheet 5.
2. See Design Standard Index No. 421 for details of Traffic Railing (Median 32" F Shape) and angles ∠A and ∠B.

DETAILS FOR TRAFFIC RAILING (MEDIAN 32" F SHAPE) MOUNTED ALUMIMUM LIGHT POLE

LAST REVISION	REVISION	DESCRIPTION:		FDOT DESIGN STANDARDS 2013	STANDARD ALUMINUM LIGHTING	INDEX NO.	SHEET NO.
07/01/09						17515	8

C:\d\projects\standards\roadway\17500-s\17515-08.dgn rd960rh 2:18:57 PM 6/28/2012

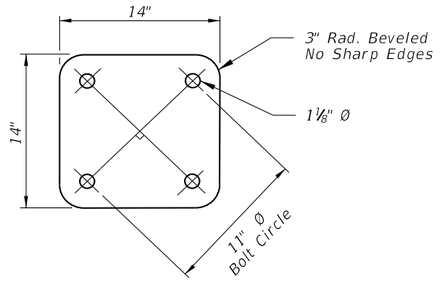

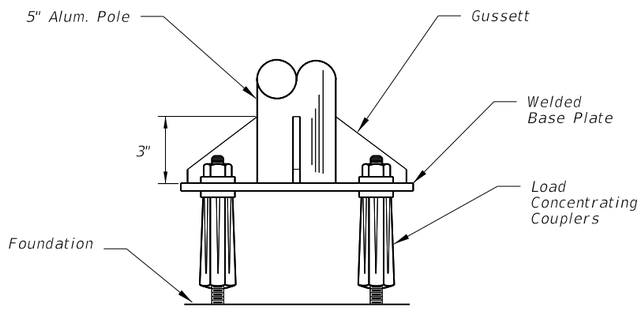

BASE PLATE & BOLT PATTERN

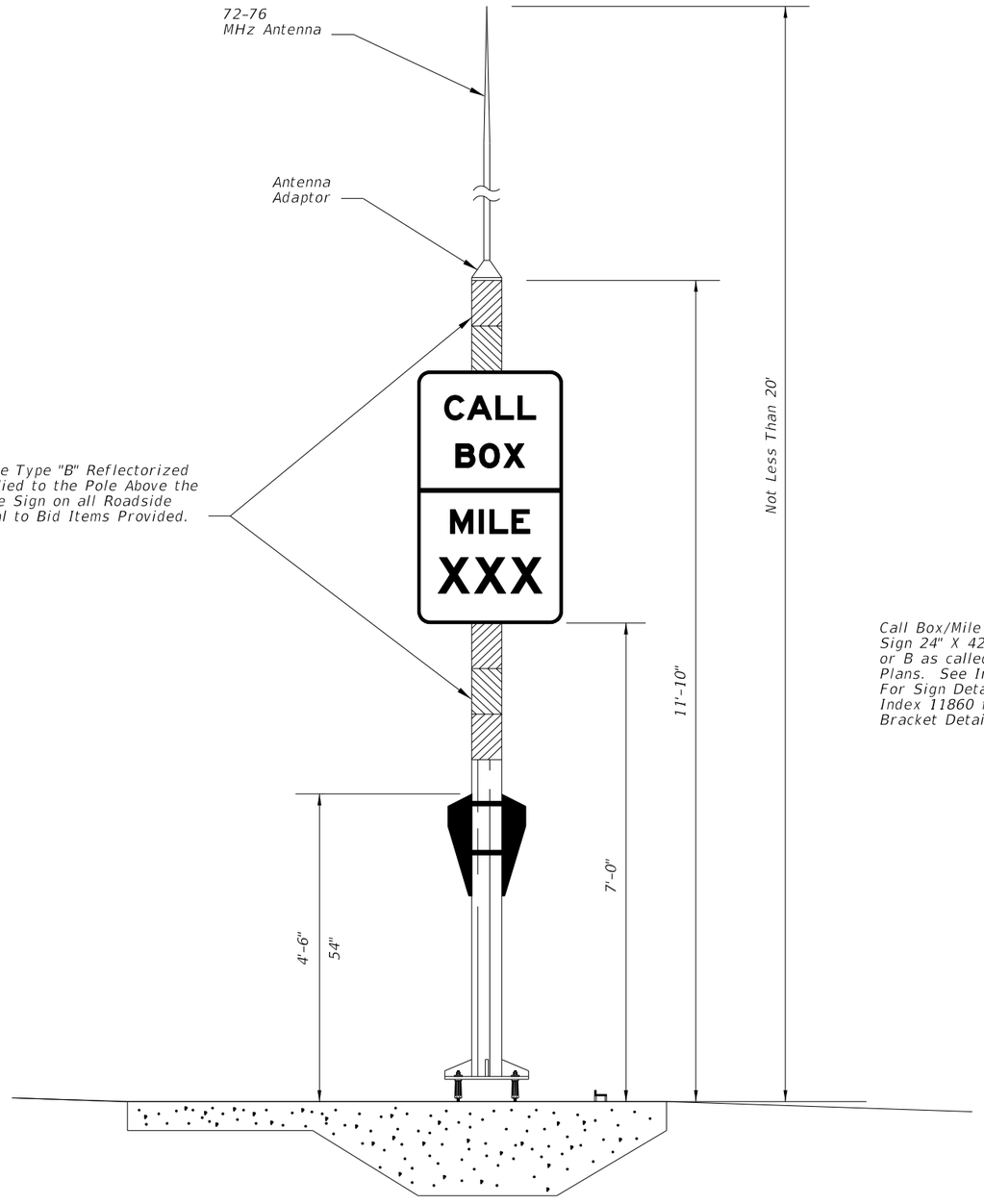

See Sheet 3 for Concrete Pad Details.

Call Box/Mile Marker Sign 24" X 42". Sign A or B as called for in Plans. See Index 17355 For Sign Details and Index 11860 for Sign Bracket Details.

CALL
BOX
MILE
XXX

FTP-63-06

SIGN A

CALL
BOX
MILE
XXX.X

FTP-64-06

SIGN B

TYPICAL MOTORIST AID CALL BOX TERMINAL

C:\d\projects\standards\roadway\17600-s\17600-01.dgn rd960rh 2:18:59 PM 6/28/2012

LAST REVISION	REVISION	DESCRIPTION:				
07/01/10			FDOT DESIGN STANDARDS 2013	MOTORIST AID CALL BOX	INDEX NO. 17600	SHEET NO. 1

EXISTING PAVEMENT INSTALLATION
Remove existing pavement minimum 1" depth throughout transition and maneuvering area, replace with misc asphalt.

NEW CONSTRUCTION
Hand work final shoulder pavement lift to plan dimensions.

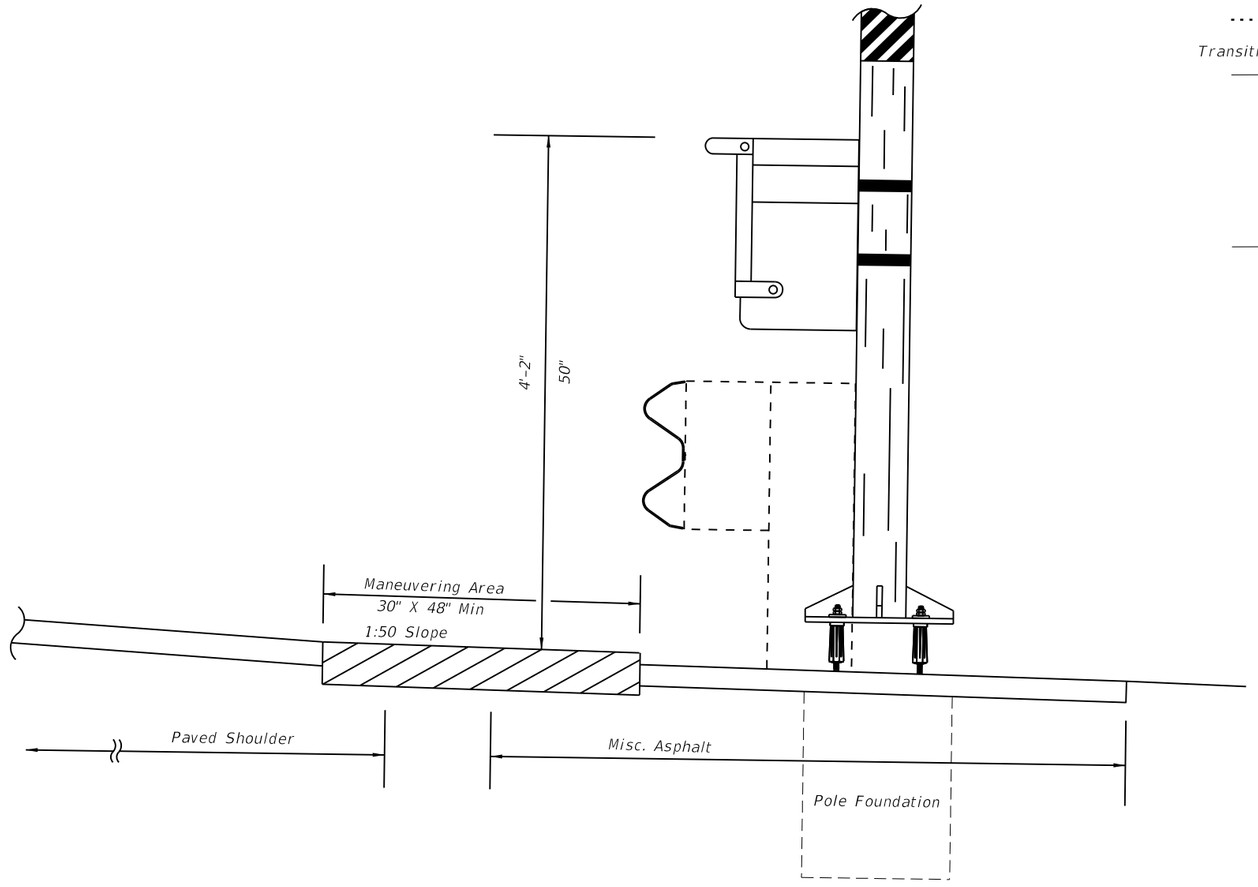

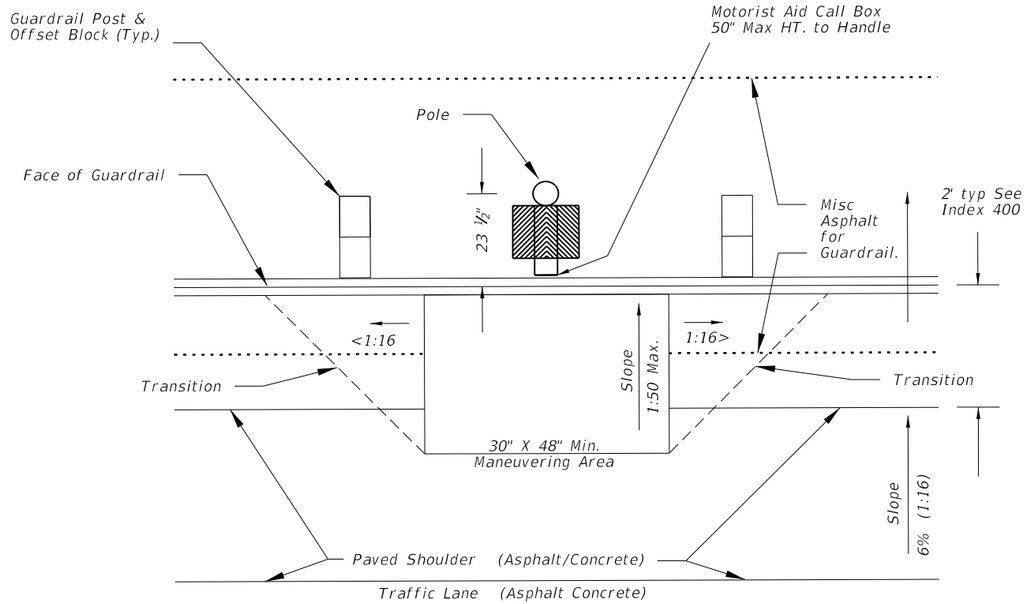

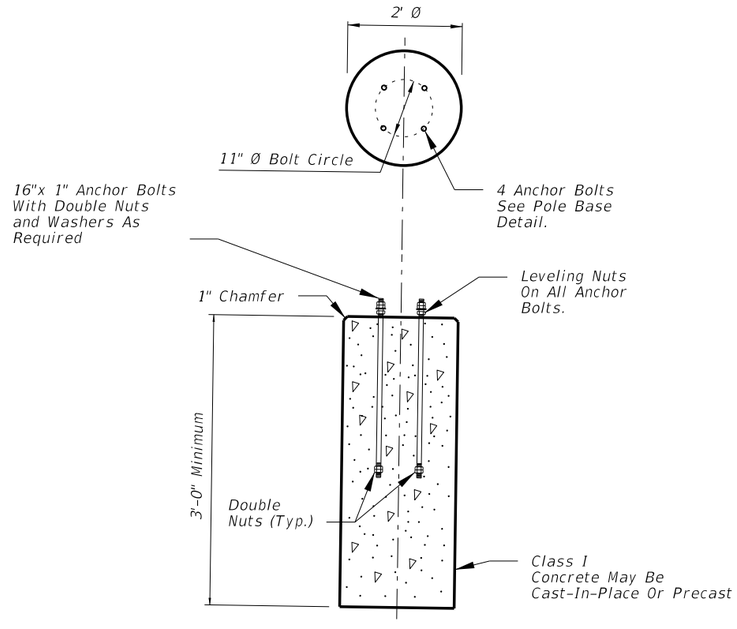

MOTORIST AID CALL BOX POLE FOUNDATION
TO BE USED ONLY BEHIND GUARDRAIL

CALL BOX BEHIND GUARDRAIL

6/28/2012 2:19:01 PM rd960rh C:\d\projects\standards\roadway\17600-s\17600-02.dgn

LAST REVISION	REVISION	DESCRIPTION:				
07/01/09			FDOT DESIGN STANDARDS 2013	MOTORIST AID CALL BOX	INDEX NO. 17600	SHEET NO. 2

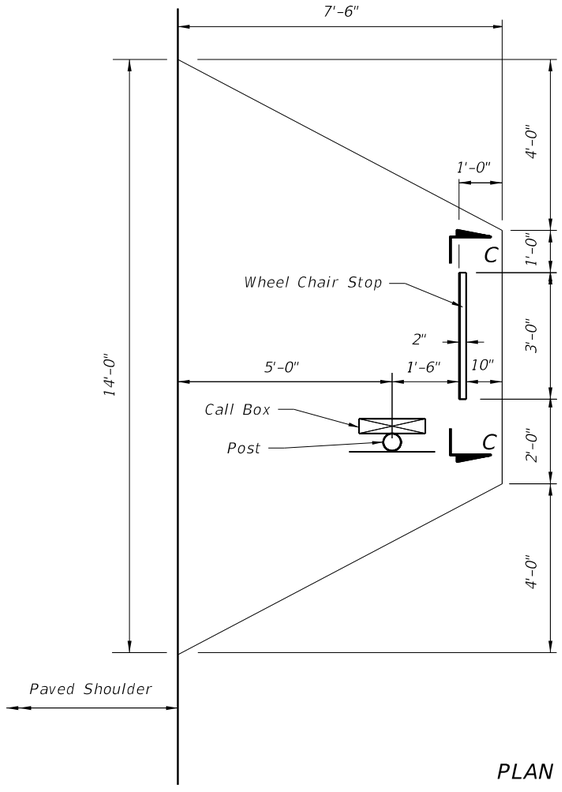

PLAN

Call Box Attachment To Slab
As Per Manufacturer's Recommendation.

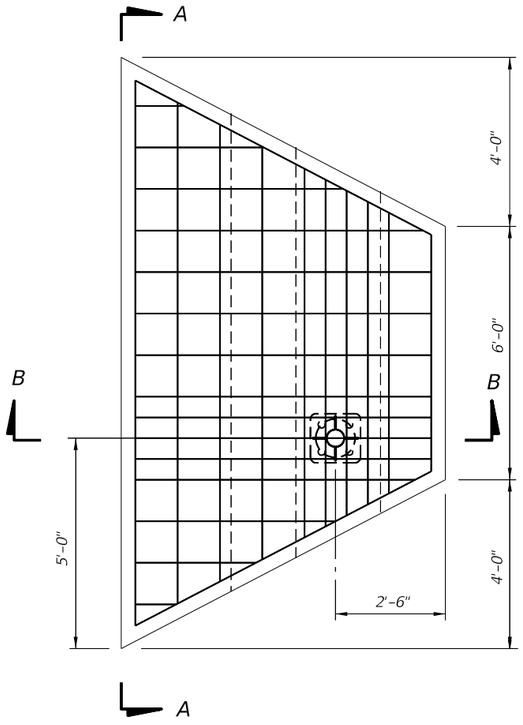

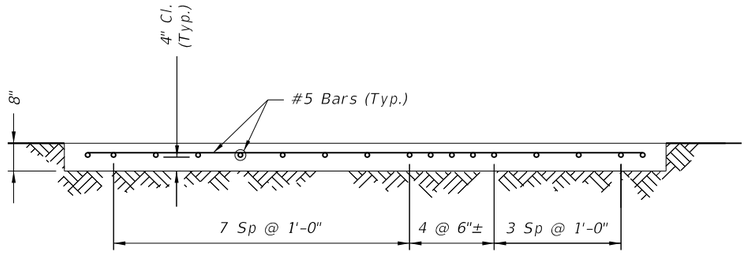

SECTION A-A

MOTORIST AID CALL BOX CONCRETE PAD QUANTITIES

Concrete : 3.5 c.y. (each)
Reinforcing Steel : 243 lb (each)

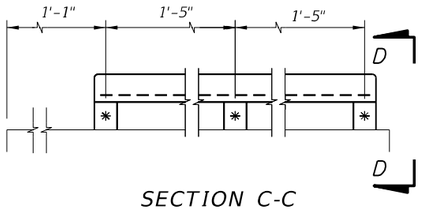

SECTION C-C

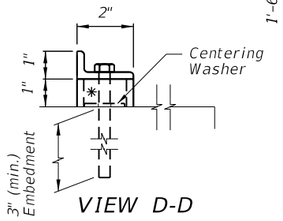

VIEW D-D

2" x 1" x ¼" Galv. Angle And
3-⅜"∅ x 5" Galvanized Steel Expansion
Anchor Bolt With 3" Min. Embedment

✱ 1 ½" ○ x 1" High
Galvanized Steel Pipe Spacer

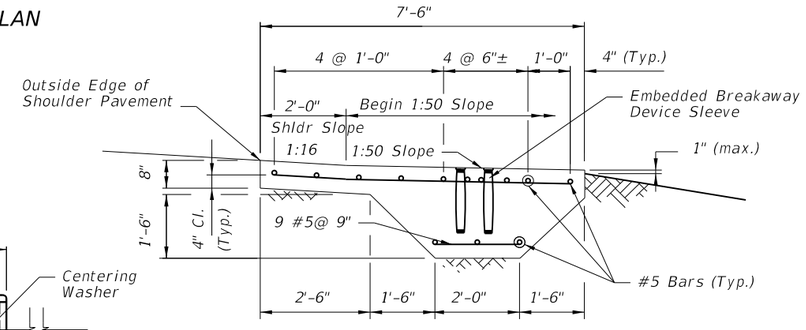

SECTION B-B

GENERAL NOTES

1. Design Specifications: AASHTO Standard Specifications For Highway Bridges (Current Edition and approved revisons thereto).
2. Concrete: Concrete strength shall be Class I (f'c=3,000 psi).
3. Reinforcing Steel: Reinforcing Steel shall conform to ASTM A615, Grade 60.
4. Payment: Concrete Pad and Foundation shall be included in the contract unit price of call box assembly or terminal. It shall also include all labor, materials, and installation of embedded breakaway device sleeves, and miscellaneous galvanized steel for wheel chair stop and attachments.
5. Breakaway Device shall be paid for under Call Box Assembly.

WHEEL CHAIR STOP DETAIL

LAST REVISION	REVISION	DESCRIPTION:				
07/01/09			FDOT DESIGN STANDARDS 2013	MOTORIST AID CALL BOX	INDEX NO. 17600	SHEET NO. 3

C:\d\projects\standards\roadway\17600-s\17600-03.dgn rd960rh 2:19:03 PM 6/28/2012

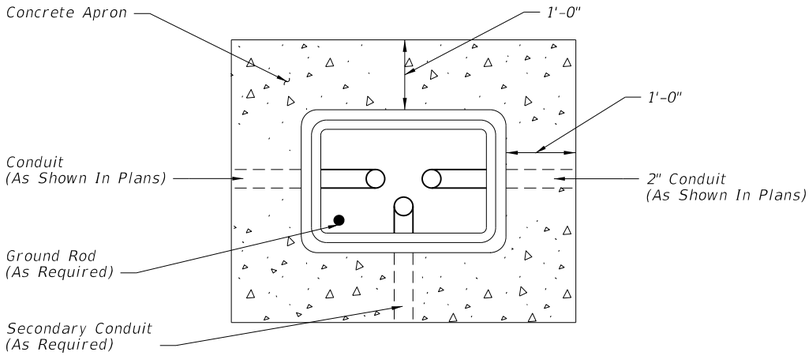

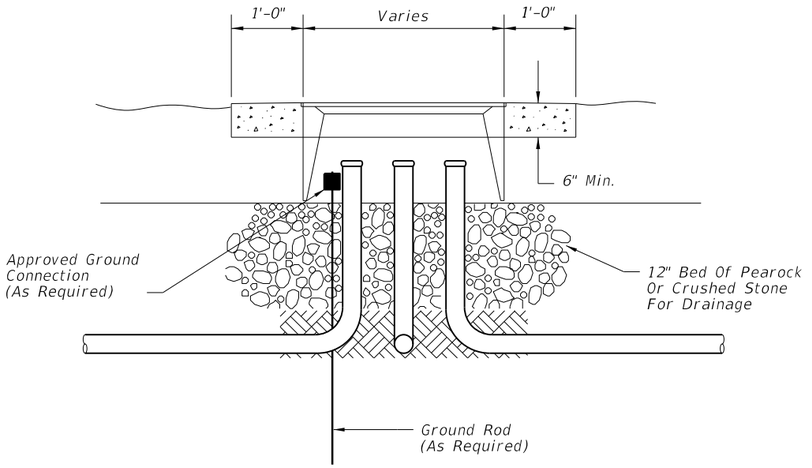

PULL BOX

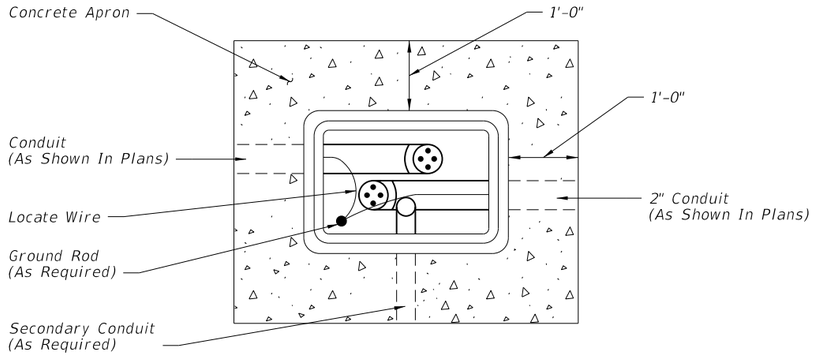

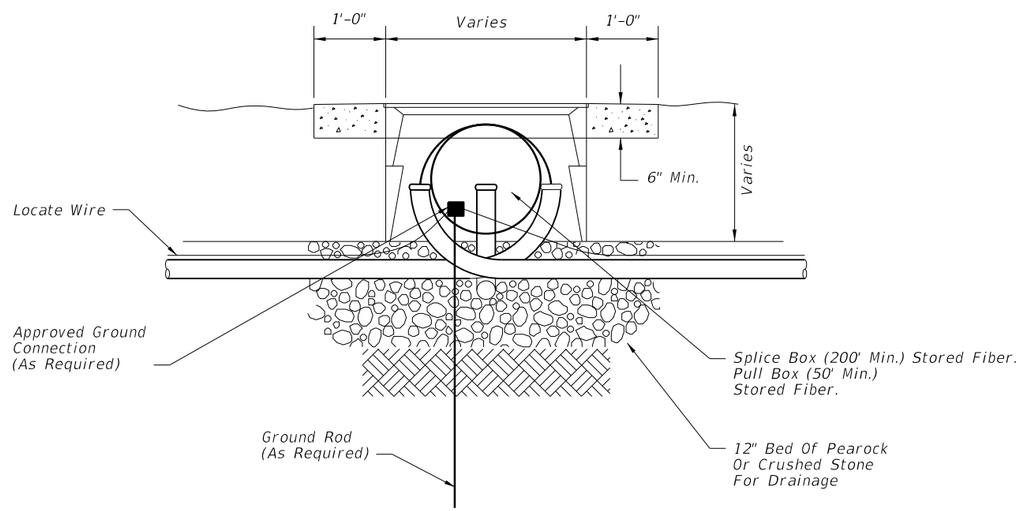

Rectangular boxes are depicted. Round fiber optic splice boxes and lids are allowed.

FIBER OPTIC BOX

1. Boxes shall not be installed in roadways or driveways.
2. Boxes shall be on the Approved Product List (APL).
3. Boxes shall be installed flush with the finished grade surface.
4. Fiber Optic splice boxes shall be provided with cable hanger racks designed to support cables and splice enclosures. Cost of racks to be included in cost of splice box.
5. Fiber optic boxes shall contain only Fiber Optic Cable, Conduit, and Locate Wire.
6. Conduit center line shall be aligned to top edge of box to facilitate cable pulling.
7. All boxes shall have 1'-0" wide (min) concrete apron. Concrete for concrete aprons shall be Class NS with a minimum strength at 28 days of f'c=2.5 Ksi. Aprons shall be sloped away from box. Cost of apron to be included in the cost of each box.
8. Prevent the ingress of Water, Dirt, Sand, and other foreign materials into the conduit prior to, during and after construction using a foam-sealing material, rubber plug, or other device designed for this application and approved.

C:\d\projects\standards\roadway\17700-s\17700-01.dgn rd960rh 2:19:05 PM 6/28/2012

LAST REVISION	REVISION	DESCRIPTION:			INDEX NO.	SHEET NO.
07/01/12			FDOT DESIGN STANDARDS 2013	PULL, SPLICE AND JUNCTION BOX	17700	1

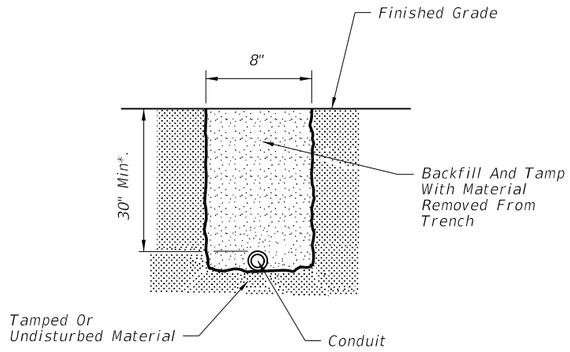

FOR USE IN AREAS NOT EXPOSED TO VEHICULAR TRAFFIC

FIGURE A

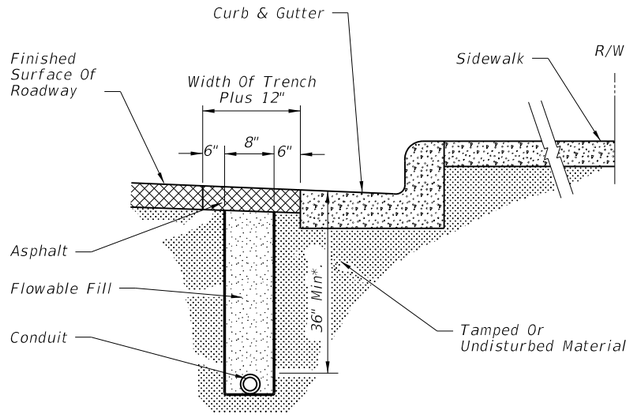

FOR USE IN ASPHALT ROADWAY ADJACENT TO GUTTER WHEN PLACEMENT OUTSIDE OF THE PAVEMENT IS NOT FEASIBLE.

FIGURE B

Note:
1. Trench not to be open more than 250' at a time when construction area is subject to vehicular or pedestrian traffic.
2. Asphalt to be sawcut to leave neat lines at the pavement cut.
3. See note 3 Figure C.

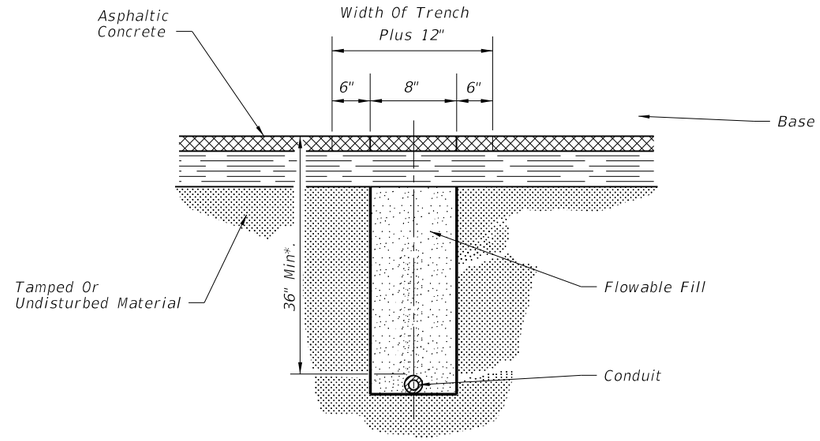

FOR USE IN INSTALLING CONDUIT UNDER EXISTING ASPHALT PAVEMENT NOT ADJACENT TO GUTTER WHEN JACKING OR DIRECT BORING IS NOT FEASIBLE.

FIGURE C

Note:
1. Rigid conduit must be used when jacking under existing pavement at 36" minimum depth.
2. Asphalt to be sawcut at the edges of the trench.
3. The removal and replacement of the additional pavement width (6") will not be required when the trench can be constructed without disturbing the asphalt surface on either side.

*May be adjusted due to field conditions upon approval of project engineer.

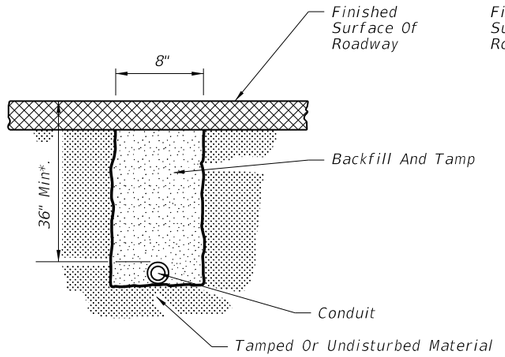

FOR USE INSTALLING CONDUIT UNDER A NEW ROADWAY PRIOR TO INSTALLATION OF BASE AND PAVEMENT

FIGURE D

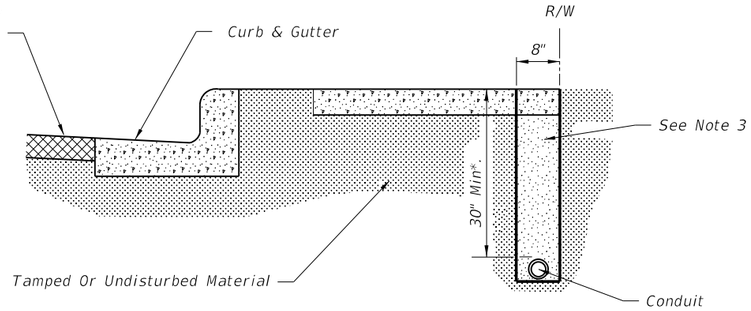

FOR USE IN INSTALLING CONDUIT UNDER SIDEWALK

FIGURE E

Note:
1. Sidewalk patches to match existing joints.
2. Entire sidewalk slab must be replaced when specified in the plans.
3. Backfill and tamp with material from trench except at driveways. At driveways, backfill a length of trench within the driveway entirely with Flowable Fill.

C:\d\projects\standards\roadway\17700-s\17721-01.dgn rd960rh 2:19:08 PM 6/28/2012

LAST REVISION	REVISION	DESCRIPTION:				
01/01/12			FDOT DESIGN STANDARDS 2013	CONDUIT INSTALLATION DETAILS	INDEX NO. 17721	SHEET NO. 1

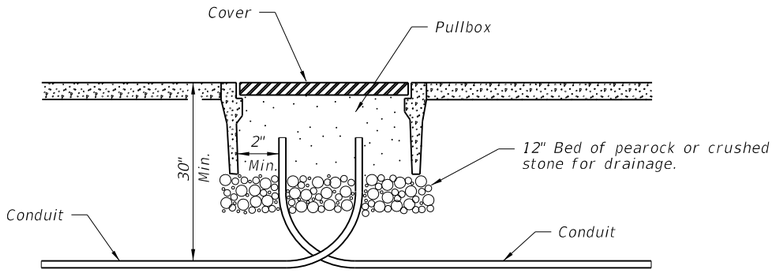

PULLBOX ENTRY OF CONDUIT UNDER SIDEWALKS

FIGURE A

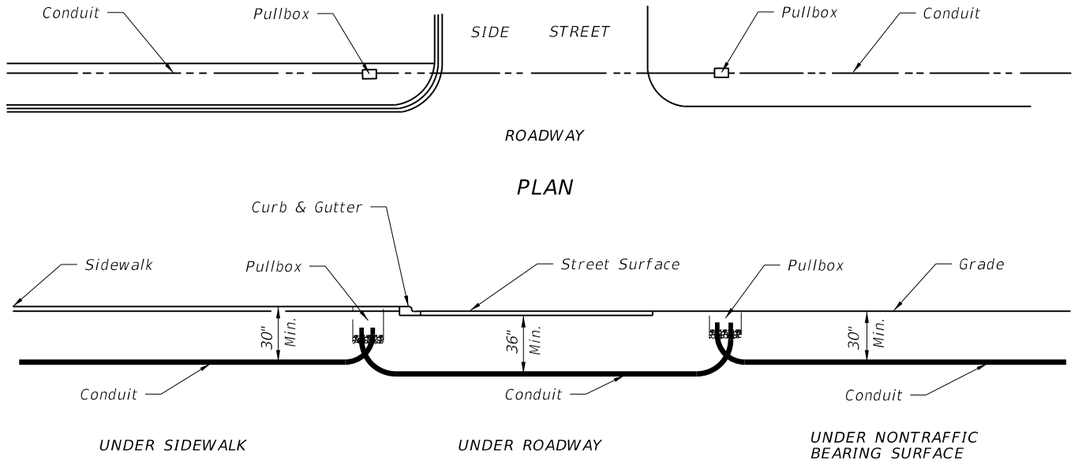

Note:
Ends of conduit shall be sealed in accordance with Section 630 of the Standard Specifications for Road and Bridge Construction.

FIGURE B

Note:
One run of conduit (between pullboxes) shall not contain more than 360° of bend including pullbox bends.

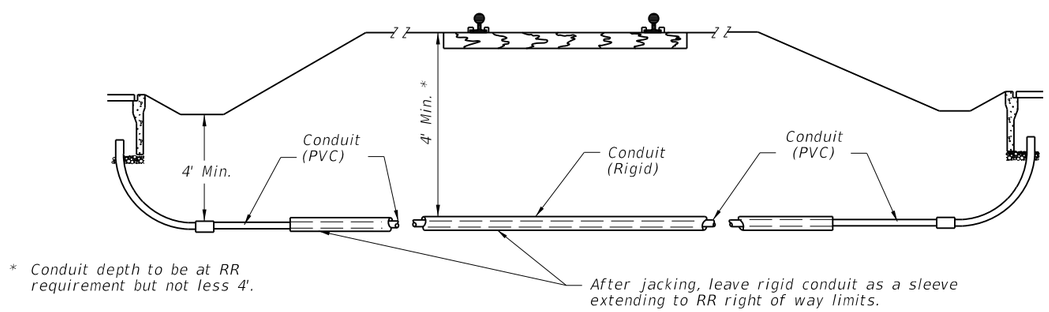

FOR USE UNDER RAILROADS

FIGURE C

C:\d\projects\standards\roadway\17700-s\17721-02.dgn
rd960rh
2:19:10 PM
6/28/2012

LAST REVISION	REVISION	DESCRIPTION:				
07/01/00			FDOT DESIGN STANDARDS 2013	CONDUIT INSTALLATION DETAILS	INDEX NO. 17721	SHEET NO. 2

STEEL STRAIN POLE NOTES

1) Designed in accordance with FDOT Structures Manual.

2) Perform all welding in accordance with the American Welding Society Structural Welding Code (Steel) ANSI/AWS D1.1 (current edition). No Field welding is permitted on any part of the pole.

3) See Standard Index No. 17727 for grounding and span wire details.

4) Foundation Materials:
   a. Reinforcing Steel: ASTM A615 Grade 60.
   b. Concrete: Class IV, (Drilled Shaft) 4,000 psi (f'c) minimum Compressive Strength at 28-days for all environmental classifications.
   c. Anchor Bolts: ASTM F1554 Grade 55 with ASTM A563 Grade A heavy-hex nuts and plate washers (all galvanized in accordance with ASTM F2329).

5) Strain Pole Specifications:
   a. Poles: ASTM A1011 Grade 50, 55, 60 or 65 (less than ¼") or ASTM A572 Grade 50, 55, 60, or 65 (1/4" and over) or ASTM A595 Grade A (55 ksi yield) or Grade B (60 ksi yield).
   b. Steel Plates: ASTM A36.
   c. Weld Metal: E70XX.
   d. Bolts: A325, Type 1. Hole Diameter: Bolt diameter plus 1/16".
   e. Base Plate: Hole Diameter; anchor bolt diameter plus ½".
   f. Handhole: Frame; ASTM A709 Grade 36 or ASTM A36, Cover; ASTM A1011 Grade 50, 55, 60 or 65.
   g. Aluminum Caps and Covers: ASTM B-26 (319-F).
   h. Stainless Steel Screws: AISI Type 316.
   i. Galvanization: All nuts, bolts and washers; ASTM F2329, All other steel; ASTM A123.

6) Pole Notes:
   a. See the Signalization Plans for clamp spacing, cable sizes and forces, signal and sign mounting locations and details.
   b. Tapered with the diameter changing at a rate of 0.14 inch per foot.
   c. Transverse welds are allowed only at the base.
   d. Poles constructed out of two or more sections with overlapping splices are not permitted.
   e. Locate the handhole 180 degrees from 2-inch wire entrance pipe.
   f. Furnish each pole with a 2"x4" (max) aluminum identification tag. Submit details for approval. Secure to pole with 0.125" stainless steel rivets or screws. Locate Identification Tag on the inside of pole and visible from handhole. Include the following information:
      Financial Project ID, Pole Type, Pole Height,
      Manufacturer's Name, F of Steel and Base Wall Thickness.

7) One hundred percent of full-penetration groove welds and a random 25 percent of partial penetration groove welds shall be inspected. Full-penetration groove weld inspection shall be performed by nondestructive methods of radiography or ultrasonics.

8) In accordance with specification 5-1.4.2, shop drawings are only required for additions, deletions, or modifications to this Design Standard.

9) Verify CSL access tubes will not interfere with anchor bolt installation before excavating the shaft. When CSL access tube locations conflict with anchor bolt locations, move the CSL access tube location ± two inches along the inner circumference of the reinforcing cage. Notify the Engineer before excavating the shaft if the CSL access tube locations cannot be moved out of conflict with anchor bolt locations.

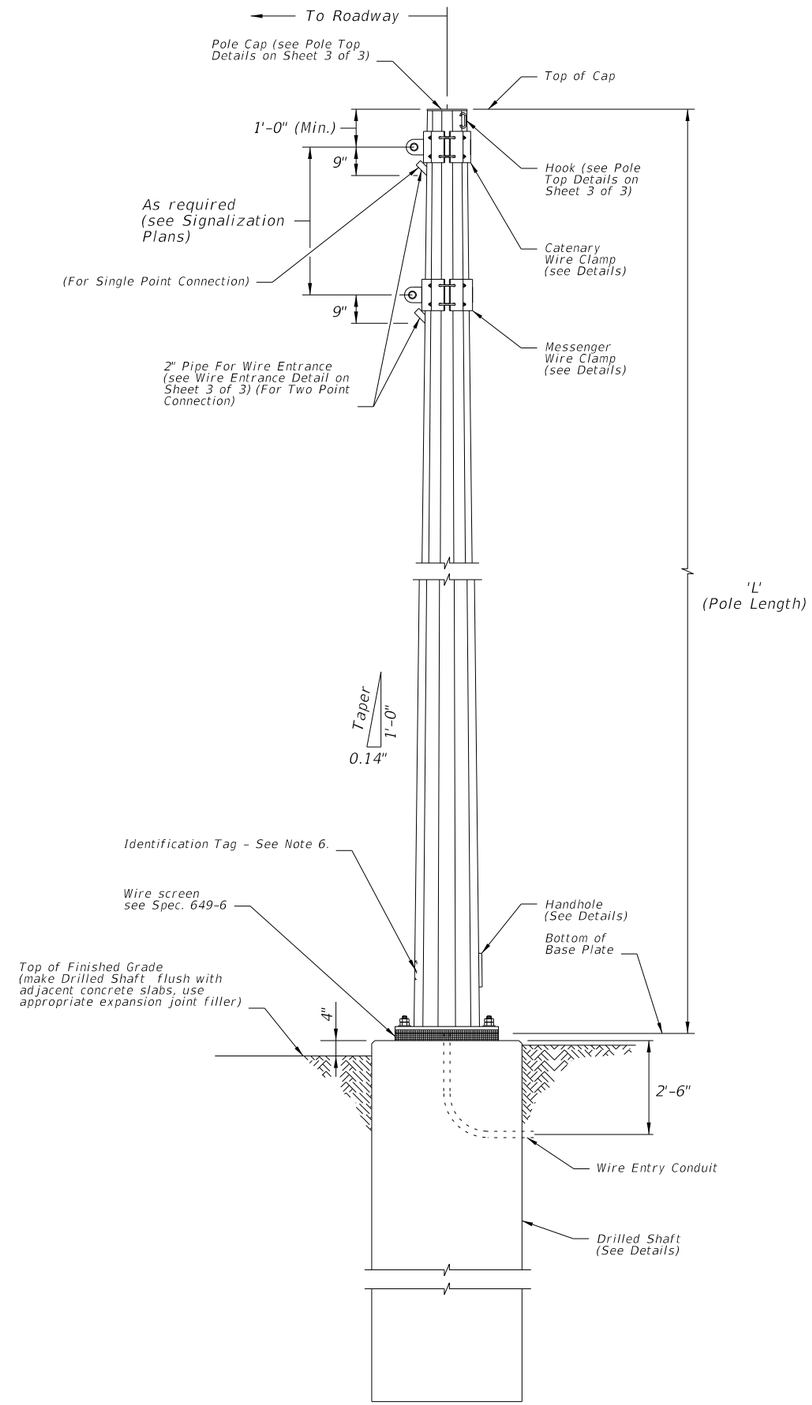

ELEVATION

ELEVATION AND NOTES

LAST REVISION	REVISION	DESCRIPTION:				
01/01/12			FDOT DESIGN STANDARDS 2013	STEEL STRAIN POLE	INDEX NO. 17723	SHEET NO. 1

6/28/2012 2:19:12 PM rd960rh C:\d\projects\standards\roadway\17700-s\17723-01.dgn

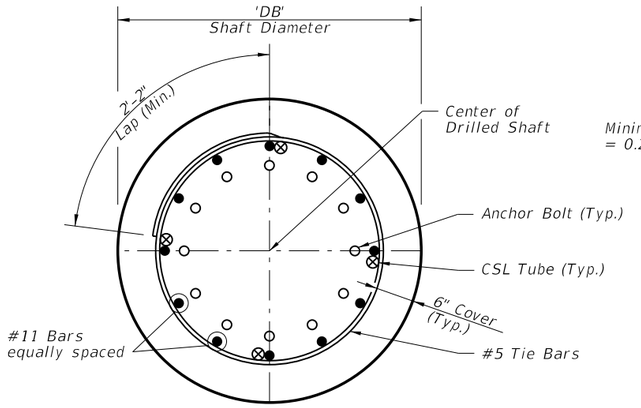

SECTION A-A

(Number of bars shown is for illustration purposes only)

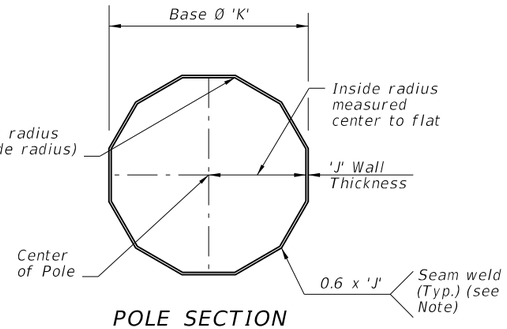

POLE SECTION

NOTE:
Longitudinal seam welds within 6" of circumferential welds shall be complete penetration welds.

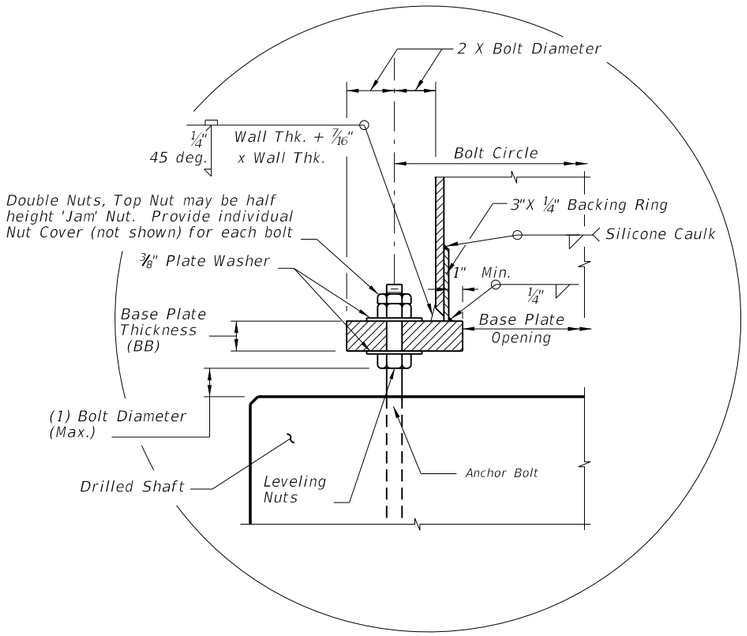

DETAIL C

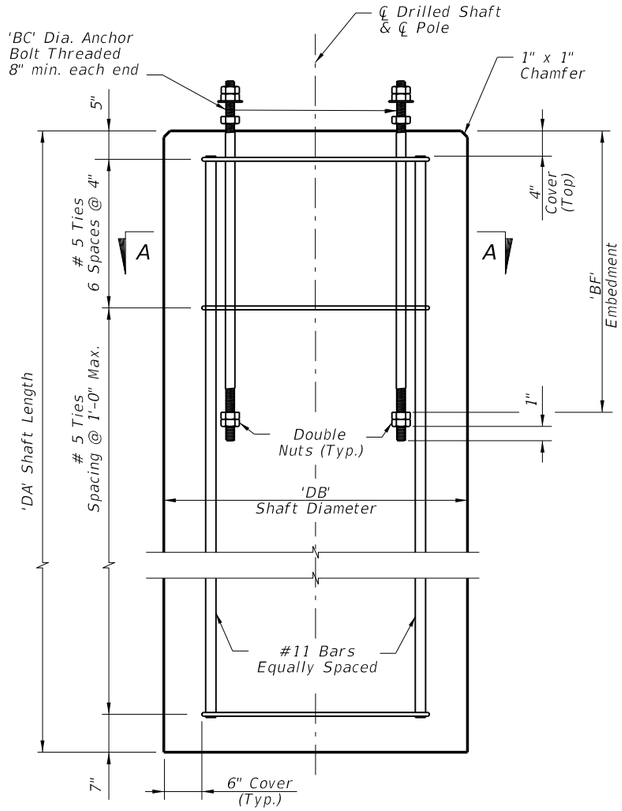

DRILLED SHAFT ELEVATION

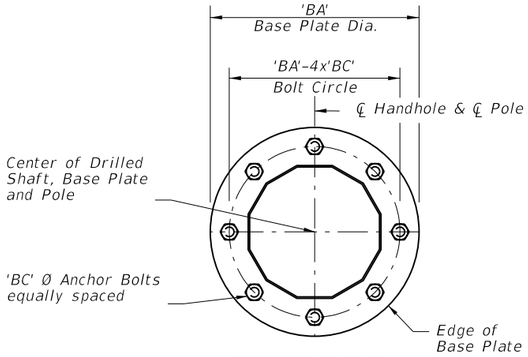

SECTION B-B

NOTE:
Number of bolts shown for illustration purposes only.

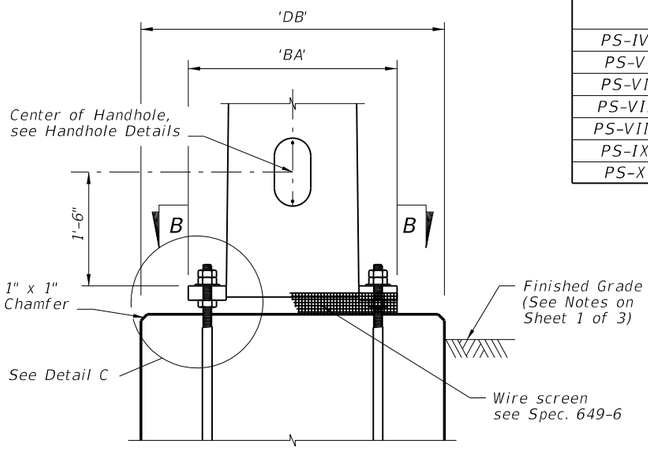

PARTIAL ELEVATION

(Showing Base Plate, Anchor bolts and Handhole)

TABLE OF STRAIN POLE VARIABLES

POLE TYPE	MAXIMUM ALLOWABLE MOMENT (kip-ft)	POLE		BASE CONNECTION					SHAFT		
		J (in)	K (in)	No. of Bolts	BA (in)	BB (in)	BC (in)	BF (in)	DA (FT)	DB (FT)	No. of #11 bars
PS-IV	95.4	0.250	14	8	25	2.50	1 3/8	60	14	4	14
PS-V	158.9	0.313	16	10	28	2.50	1 1/2	60	15	4	14
PS-VI	203.6	0.313	18	12	30	2.50	1 1/2	60	16	4	14
PS-VII	280.3	0.313	21	14	33	2.50	1 1/2	60	16	4.5	16
PS-VIII	338.0	0.313	23	16	35	2.50	1 1/2	60	17	4.5	16
PS-IX	400.9	0.313	25	12	39	3.00	1 3/4	60	17	5	18
PS-X	469.1	0.313	27	14	41	3.00	1 3/4	60	18	5	18

FOUNDATION NOTES:
The foundations for Steel Strain Poles are designed based upon the following conservative soil criteria which covers the great majority of soil types found in Florida:

Classification = Cohesionless (Fine Sand)
Friction Angle = 30 Degrees (30°)
Unit Weight = 50 pcf (assumed saturated)

Only in cases where the Designer considers the soil types at the specific site location to be of lesser strength properties should an analysis be required. Auger borings, SPT borings or CPT soundings may be utilized as needed to verify the assumed soil properties, and at relatively uniform sites, a single boring or sounding may cover several foundations. Furthermore, borings in the area that were performed for other purposes may be used to confirm the assumed soil properties.

BASE AND FOUNDATION DETAILS AND TABLE OF VARIABLES

6/28/2012 2:19:15 PM rd960rh C:\d\projects\standards\roadway\17700-s\17723-02.dgn

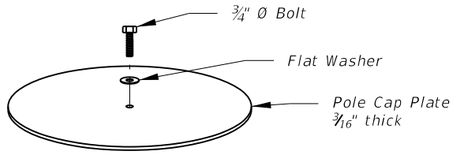

NOTE: A properly sized Service Head (Weather Head), shall be installed and fastened securely on to the standard pipe for each pole location. At locations other than service entrance, the service head face is to be left closed to outside atmosphere. Service entrance installation per Index No. 17727.

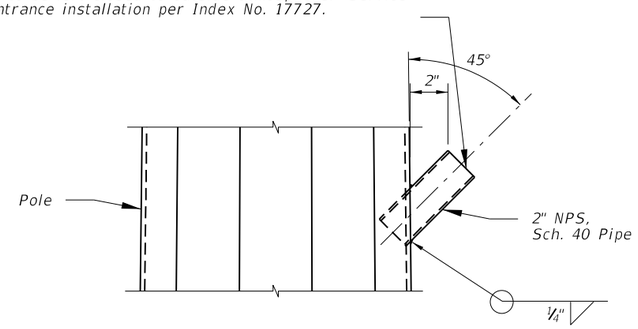

WIRE ENTRANCE DETAILS

Cable Diameter (in.)	Minimum Breaking Strength (kip)	Plate Thickness (in.)
1/2	25	1
7/16	18	7/8
3/8	11.5	3/4
1/4	3.15	3/8

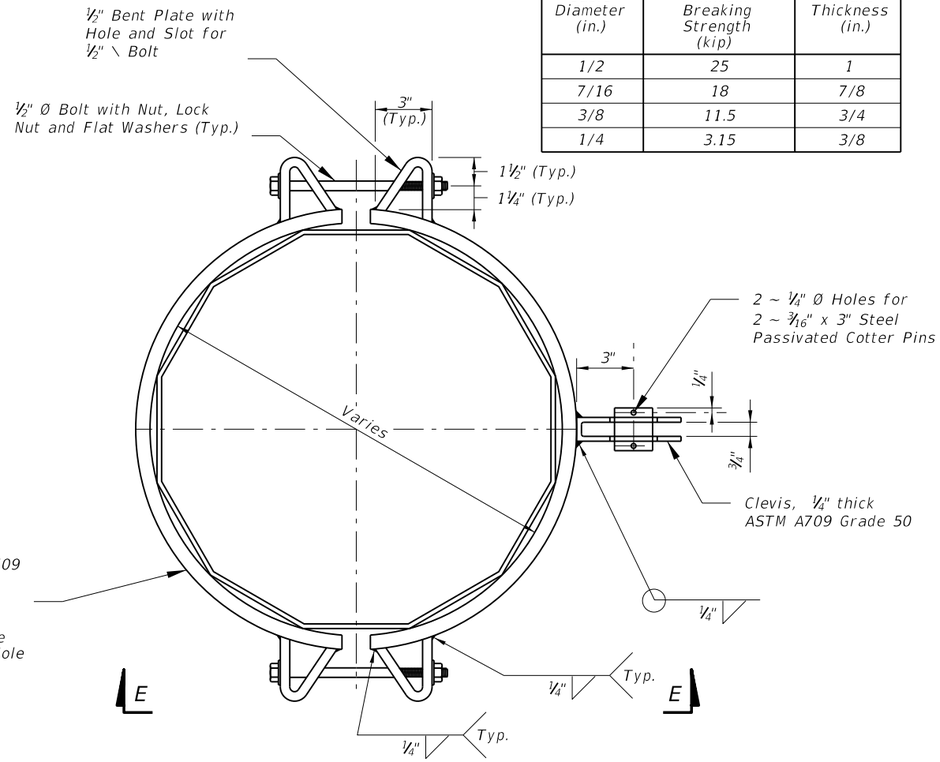

CATENARY AND MESSENGER WIRE CLAMPS

NOTE: Clamps have been sized for Design Cable Loads shown in the Table, and a Maximum Pole Diameter at the Clamp location of 2'-1".

TOP VIEW

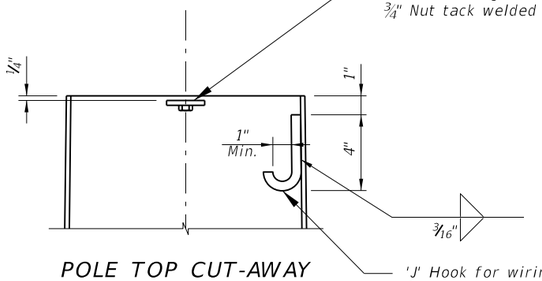

POLE TOP CUT-AWAY
(Option 'a')

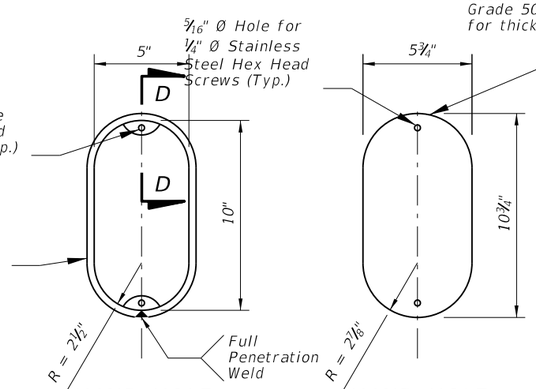

HAND HOLE FRAME

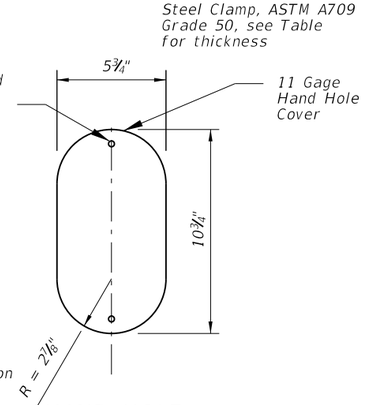

HAND HOLE COVER

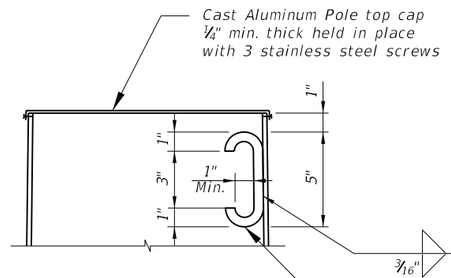

POLE TOP CUT-AWAY
(Option 'b')

POLE TOP NOTE:
Any combination of the above two options may be used, provided both lifting and wiring is accommodated.

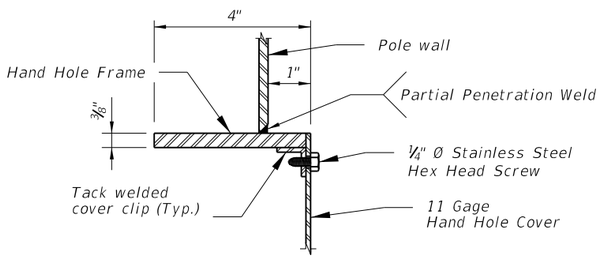

SECTION D-D
(thru Hand Hole)

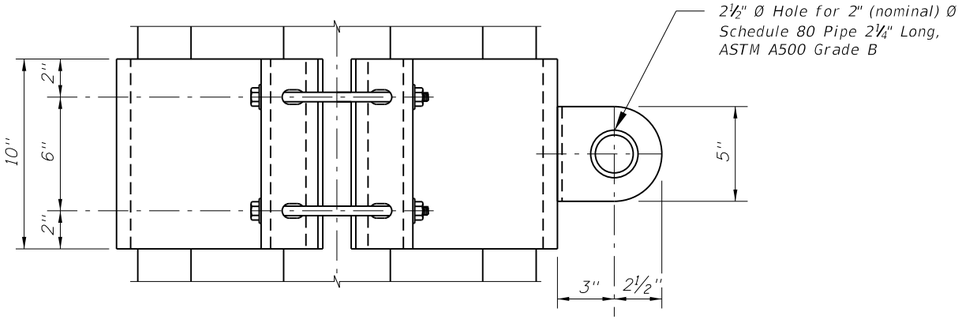

VIEW E-E

ATTACHMENT DETAILS

LAST REVISION	REVISION	DESCRIPTION:				
01/01/09			FDOT DESIGN STANDARDS 2013	STEEL STRAIN POLE	INDEX NO. 17723	SHEET NO. 3

C:\d\projects\standards\roadway\17700-s\17723-03.dgn rd960rh 2:19:17 PM 6/28/2012

GENERAL NOTES:

Materials:

Concrete:	Class V Special or Class VI 6 ksi minimum at 28 days 4 ksi minimum at transfer
Prestressed Strands:	ASTM A416 Grade 270 stress relieved or low relaxation
Spiral Reinforcing:	ASTM A82 cold-drawn steel wire

Provide a minimum concrete cover of 1 inch.

For spiral reinforcing, one turn is required for splices and two turns are required at both the tip and butt ends of the pole.

The design Front Face and Back Face of poles may vary transversely from the section shown by ± ¼" to assist with removal from forms. Balance addition and subtraction of face widths to maintain section areas shown.

Provide hand hole and coupler cover plates made of non-corrosive materials. Attach cover plates to poles using lead anchors or threaded inserts embedded in the poles in conjunction with round headed chrome plated screws.

Tie ground wires to the interior of reinforcing steel as necessary to prevent displacement during concreting operations.

Provide Identification Markings on the poles where indicated on the following sheets. Include the following information using inset numerals with 1" height:

Financial Project ID
Pole Manufacturer
Standard Pole Type Number
Pole Length (L)

Provide a Class 3 Surface Finish as specified in Section 400-15.2.4 of the Standard Specifications.

Pick-up and support locations shown may vary with a tolerance of ± 3".

In accordance with Specification 5-1.4.2, shop drawings are only required for additions, deletions, or modifications to this Design Standard.

INSTALLATION NOTES:

If a two point attachment is required by the plans, provide an eye bolt hole for the messenger wire or field-drill at the location indicated in the plans. When required, field-drill the eyebolt hole for the tether wire prior to installation.

C:\d\projects\standards\roadway\17700-s\17725-01.dgn
rd960rh
2:19:20 PM
6/28/2012

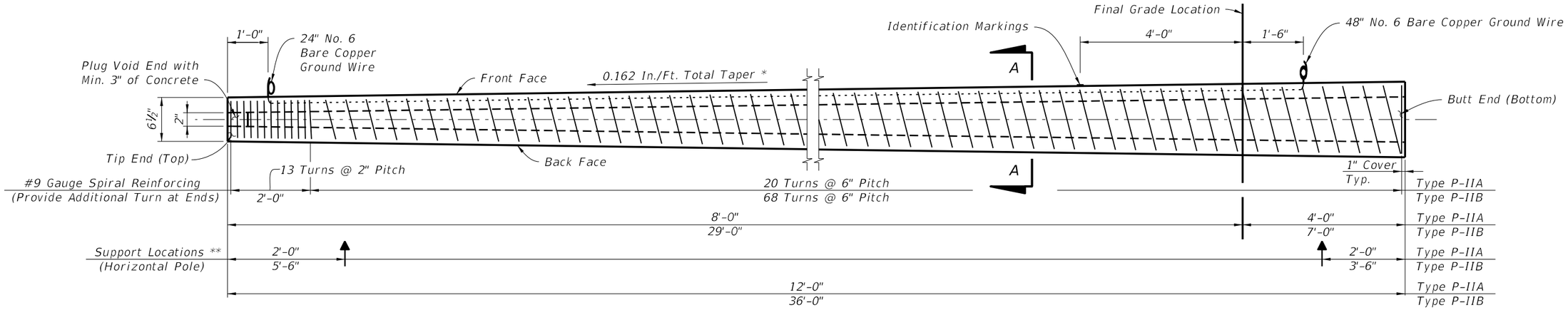

SERVICE POLE P-IIA (12 Ft.) & P-IIB (36 Ft.) ELEVATION
(Strands Not Shown)

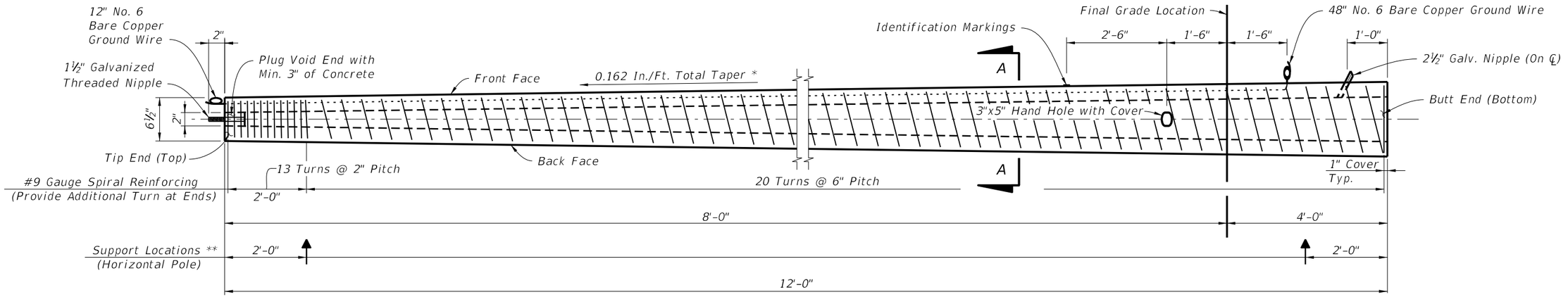

PEDESTAL POLE P-IIC (12 Ft.) ELEVATION
(Strands Not Shown)
(For Installation, Refer to Standard Index 17504)

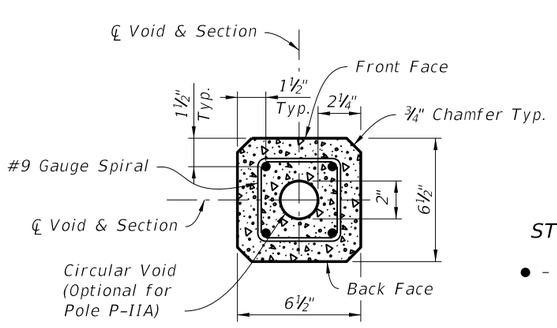

TIP END SECTION (TOP)

STRAND LEGEND

- ● – *Prestressed Strand*
  0.5 In. Grade 270, LRS
  24 Kips Before Transfer
  (4 strands total)

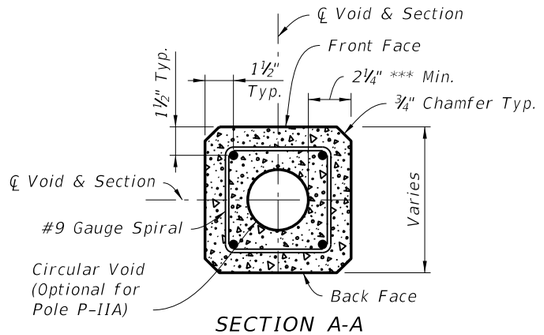

SECTION A-A
(Typical Square Section)

NOTES:

Work this Index with the Strain Pole Schedule in the plans.

Strands shown are continuous from Tip End to Butt End.

Elevation view scale is exaggerated vertically for clarity.

For final erection, tilt pole upright with single point attachment located a distance 4 Ft. (for P-IIA & P-IIC) or 10 Ft. (for P-IIB) from the Tip End face.

* *Taper includes pole width, strands, reinforcing and void. (0.081 In./Ft. per face)*

** *Support locations are for strand release, storage, lifting and transport. Keep Back Face oriented downward until final erection.*

*** *Dimension may vary from 2¼" to 3½" to accommodate smaller radius of optional stepped (PVC) void. The void diameter shall not be less than 2".*

SERVICE AND PEDESTAL POLE TYPE P-II

LAST REVISION	REVISION	DESCRIPTION:			INDEX NO.	SHEET NO.
01/01/12			FDOT DESIGN STANDARDS 2013	CONCRETE POLES	17725	2

C:\d\projects\standards\roadway\17700-s\17725-02.dgn rd960rh 2:19:22 PM 6/28/2012

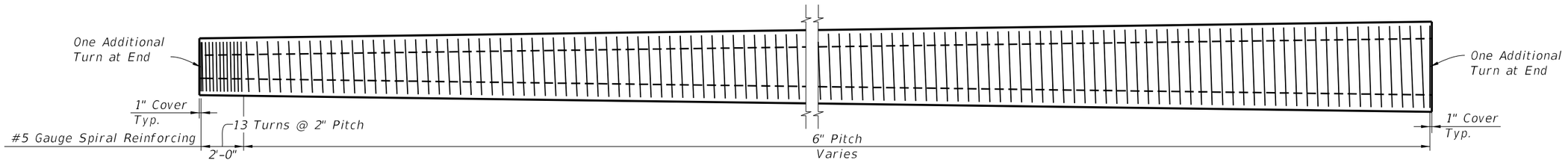

SPIRAL REINFORCING ELEVATION
(Strands, Holes, and Fixtures Not Shown)

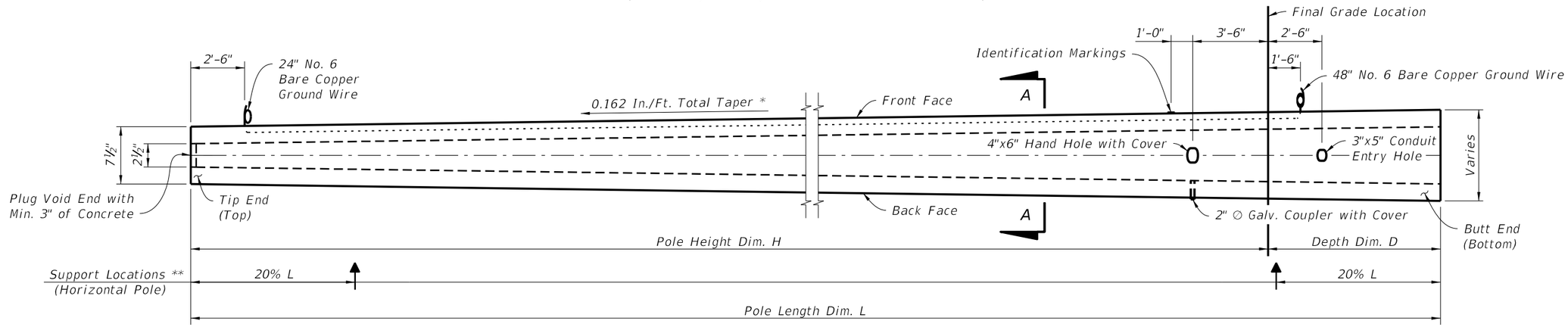

POLE ELEVATION
(Strands and Reinforcing Not Shown)
(See Design Standard Index 17900 and Specification 744 for
Modifications to Type P-III Poles Used at Traffic Monitoring Sites)

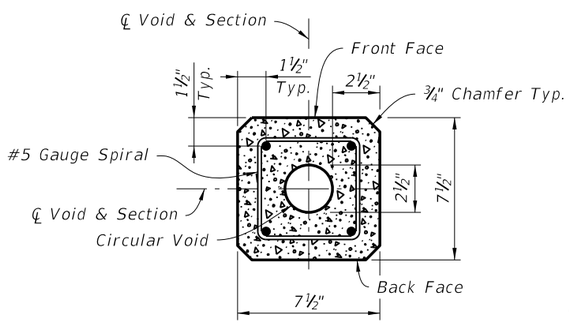

TIP END SECTION (TOP)

STRAND LEGEND

- ● – Prestressed Strand 0.5 In. Grade 270, LRS 31 Kips Before Transfer (4 strands total)

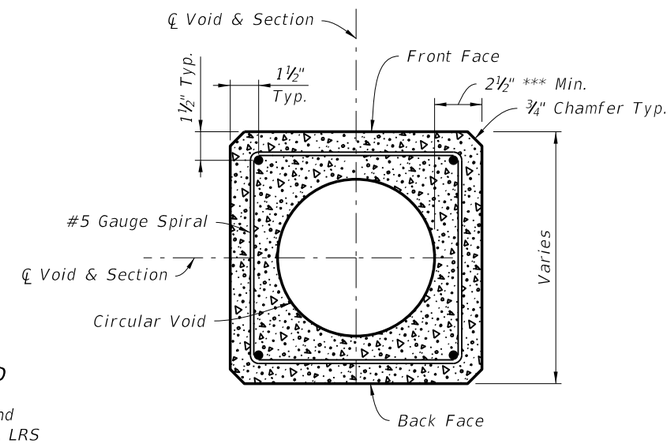

SECTION A-A
(Typical Square Section)

NOTES:

Work this Index with the Strain Pole Schedule in the plans.

Strands shown are continuous from Tip End to Butt End.

Elevation view scale is exaggerated vertically for clarity.

For final erection, tilt pole upright with single point attachment located a distance 33.3% L from Tip End face.

* Taper includes pole width, strands, reinforcing and void. (0.081 In./Ft. per face)

** Support locations are for strand release, storage, lifting and transport. Keep Back Face oriented downward until final erection.

*** Dimension may vary from 2½" to 3¾" to accommodate smaller radius of optional stepped (PVC) void. The void diameter shall not be less than 2½".

LIGHTING AND TRAFFIC MONITORING POLES TYPE P-III

LAST REVISION	REVISION	DESCRIPTION:		FDOT DESIGN STANDARDS 2013	CONCRETE POLES	INDEX NO.	SHEET NO.
01/01/12						17725	3

C:\d\projects\standards\roadway\17700-s\17725-03.dgn rd960rh 2:19:25 PM 6/28/2012

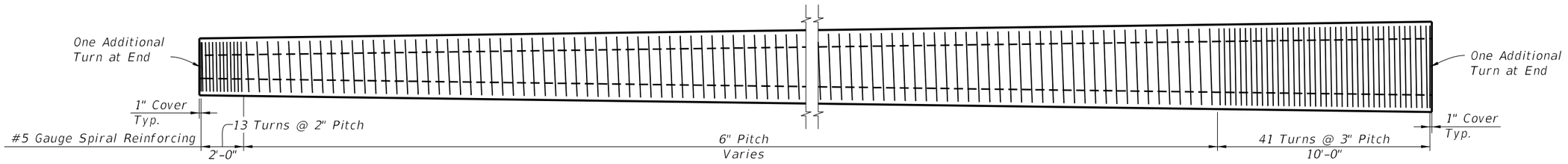

SPIRAL REINFORCING ELEVATION
(Strands, Holes, and Fixtures Not Shown)

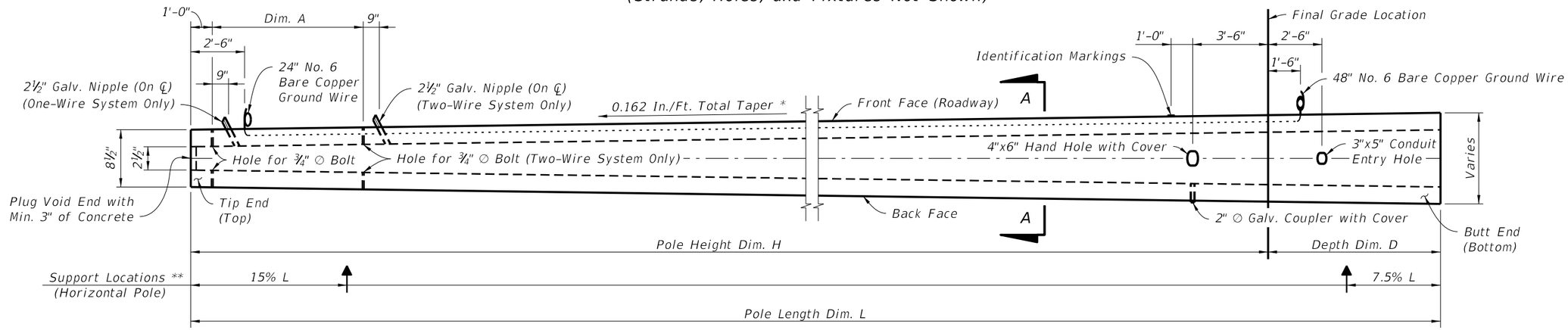

POLE ELEVATION
(Strands and Reinforcing Not Shown)

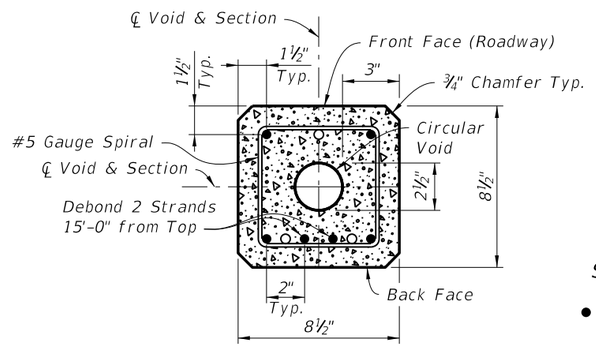

TIP END SECTION (TOP)
(For Dormant Strand Locations See Section A-A)

STRAND LEGEND

● – Prestressed Strand
0.5 In. Grade 270, LRS
31 Kips Before Transfer
(6 strands total)

○ – Dormant Strand
0.5 In. Grade 270, LRS
(3 strands total)

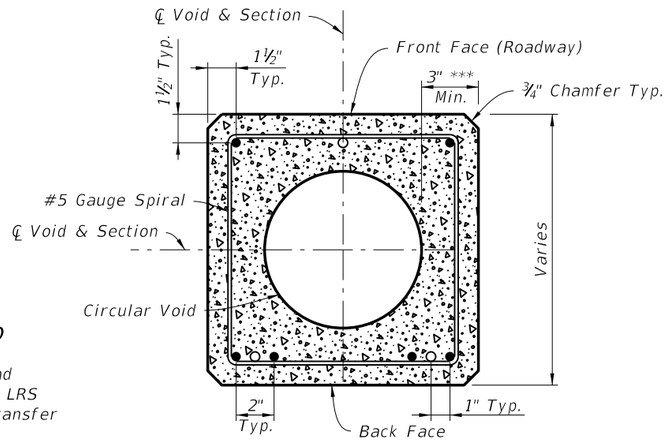

SECTION A-A
(Typical Square Section)

NOTES:

Work this Index with the Strain Pole Schedule in the plans.

Strands shown are continuous from Tip End to Butt End.

Elevation view scale is exaggerated vertically for clarity.

For final erection, tilt pole upright with single point attachment located a distance 20% L from the Tip End face.

* Taper includes pole width, strands, reinforcing and void. (0.081 In./Ft. per face)

** Support locations are for strand release, storage, lifting and transport. Keep Back Face oriented downward until final erection.

*** Dimension may vary from 3" to 4¼" to accommodate smaller radius of optional stepped (PVC) void. The void diameter shall not be less than 2½".

STRAIN POLE TYPE P-IV

LAST REVISION	REVISION	DESCRIPTION:		FDOT DESIGN STANDARDS 2013	CONCRETE POLES	INDEX NO.	SHEET NO.
01/01/12						17725	4

C:\d\projects\standards\roadway\17700-s\17725-04.dgn rd960rh 2:19:27 PM 6/28/2012

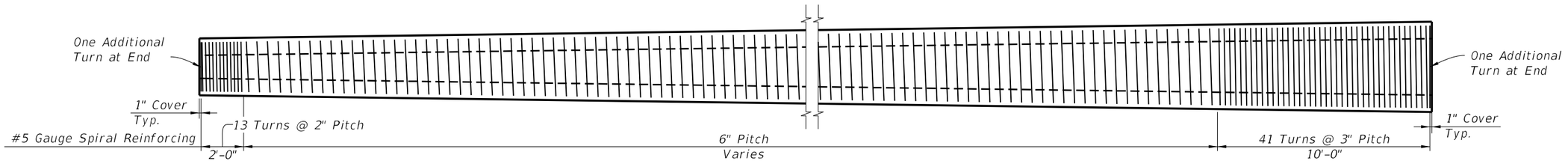

SPIRAL REINFORCING ELEVATION
(Strands, Holes, and Fixtures Not Shown)

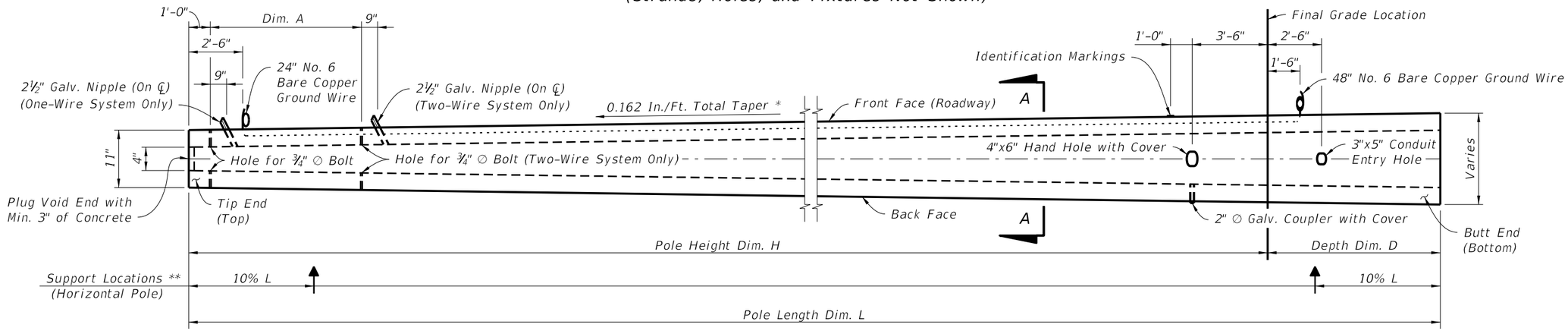

POLE ELEVATION
(Strands and Reinforcing Not Shown)

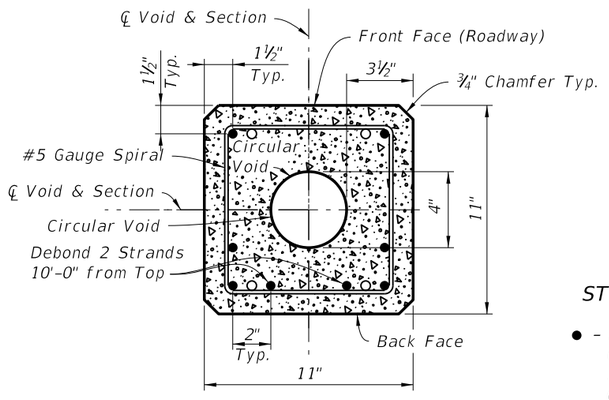

TIP END SECTION (TOP)
(For Dormant Strand Locations, See Section A-A)

STRAND LEGEND

● – Prestressed Strand
0.5 In. Grade 270, LRS
31 Kips Before Transfer
(8 strands total)

○ – Dormant Strand
0.5 In. Grade 270, LRS
(4 strands total)

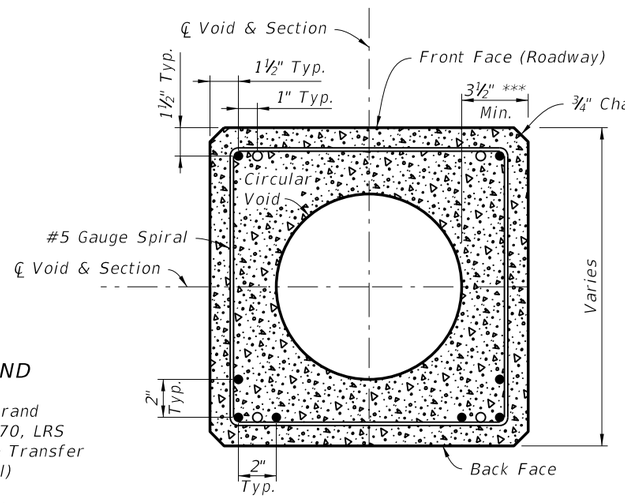

SECTION A-A
(Typical Square Section)

NOTES:

Work this Index with the Strain Pole Schedule in the plans.

Strands shown are continuous from Tip End to Butt End.

Elevation view scale is exaggerated vertically for clarity.

For final erection, tilt pole upright with single point attachment located a distance 12.5% L from the Tip End face.

* Taper includes pole width, strands, reinforcing and void. (0.081 In./Ft. per face)

** Support locations are for strand release, storage, lifting and transport. Keep Back Face oriented downward until final erection.

*** Dimension may vary from 3½" to 4¾" to accommodate smaller radius of optional stepped (PVC) void. The void diameter shall not be less than 4".

STRAIN POLE TYPE P-V

C:\d\projects\standards\roadway\17700-s\17725-05.dgn
rd960rh
2:19:30 PM
6/28/2012

LAST REVISION	REVISION	DESCRIPTION:				
01/01/12			FDOT DESIGN STANDARDS 2013	CONCRETE POLES	INDEX NO. 17725	SHEET NO. 5

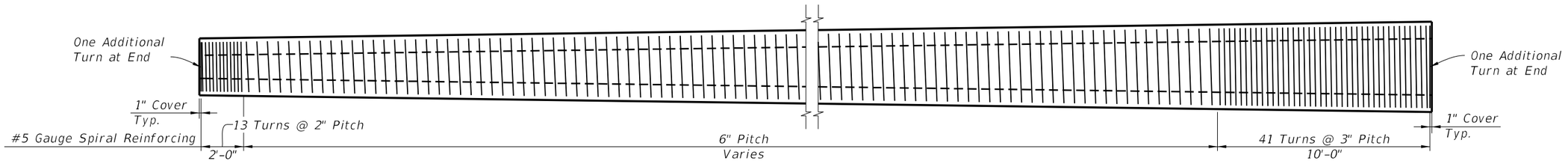

SPIRAL REINFORCING ELEVATION
(Strands, Holes, and Fixtures Not Shown)

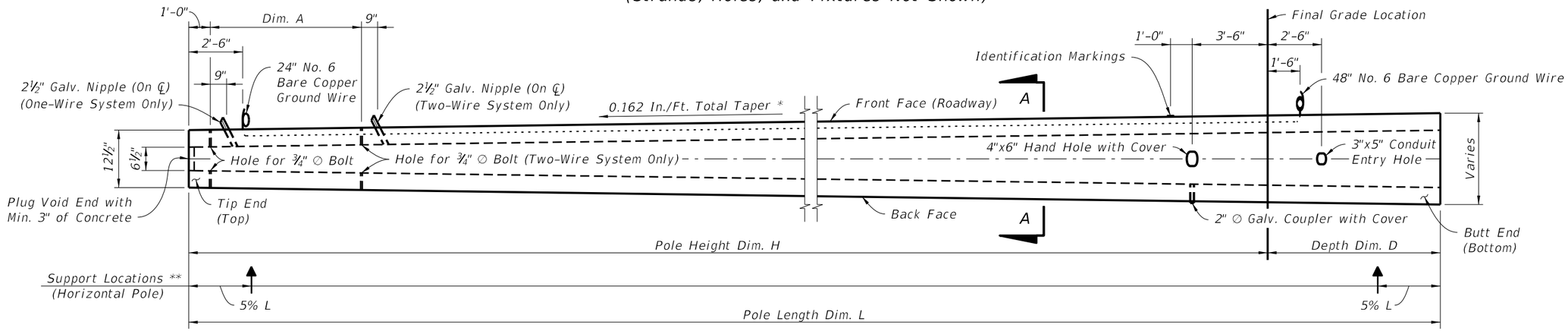

POLE ELEVATION
(Strands and Reinforcing Not Shown)

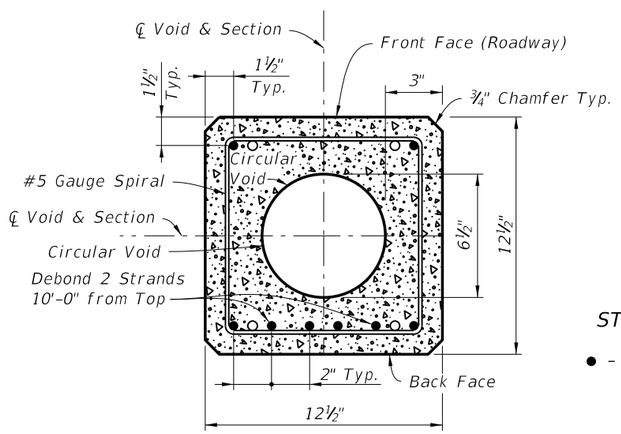

TIP END SECTION (TOP)
(For Dormant Strand Locations, See Section A-A)

STRAND LEGEND

● – Prestressed Strand
0.5 In. Grade 270, LRS
31 Kips Before Transfer
(8 strands total)

○ – Dormant Strand
0.5 In. Grade 270, LRS
(4 strands total)

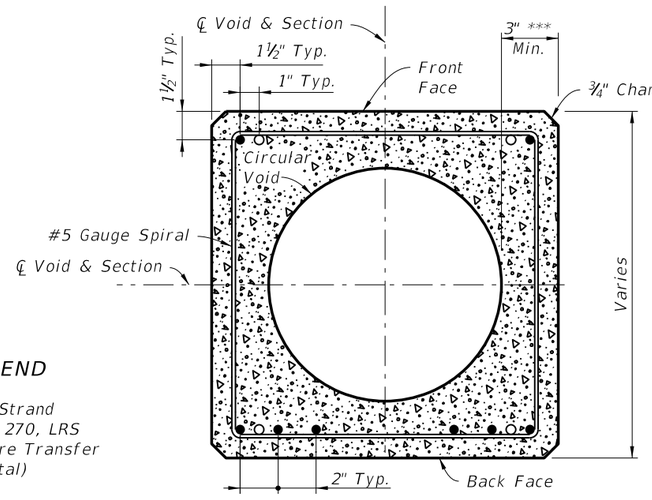

SECTION A-A
(Typical Square Section)

NOTES:

Work this Index with the Strain Pole Schedule in the plans.

Strands shown are continuous from Tip End to Butt End.

Elevation view scale is exaggerated vertically for clarity.

For final erection, tilt pole upright with single point attachment located a distance 10% L from Tip End Face.

* Taper includes pole width, strands, reinforcing and void. (0.081 In./Ft. per face)

** Support locations are for strand release, storage, lifting and transport. Keep Back Face oriented downward until final erection.

*** Dimension may vary from 3" to 4¼" to accommodate smaller radius of optional stepped (PVC) void. The void diameter shall not be less than 6½".

STRAIN POLE TYPE P-VI

C:\d\projects\standards\roadway\17700-s\17725-06.dgn rd960rh 2:19:32 PM 6/28/2012

LAST REVISION	REVISION	DESCRIPTION:			INDEX NO.	SHEET NO.
01/01/12			FDOT DESIGN STANDARDS 2013	CONCRETE POLES	17725	6

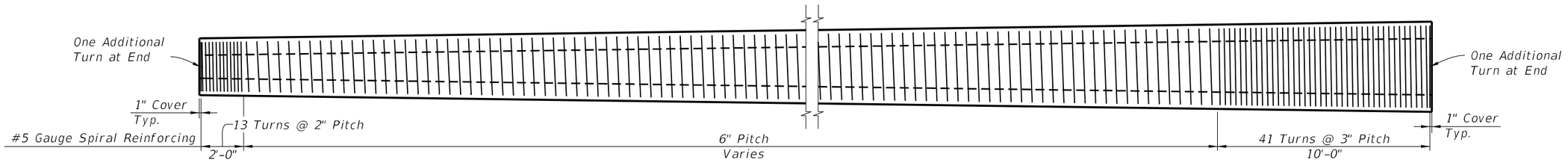

SPIRAL REINFORCING ELEVATION
(Strands, Holes, and Fixtures Not Shown)

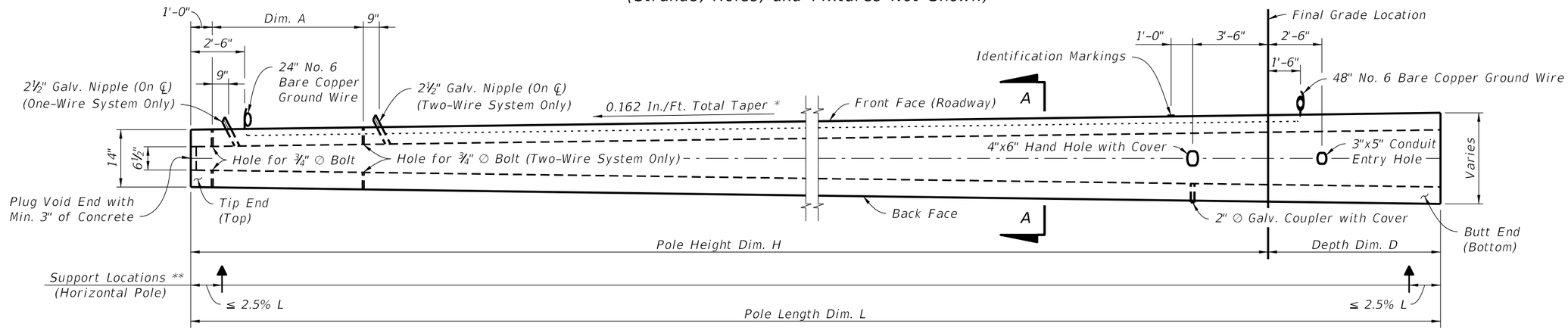

POLE ELEVATION
(Strands and Reinforcing Not Shown)

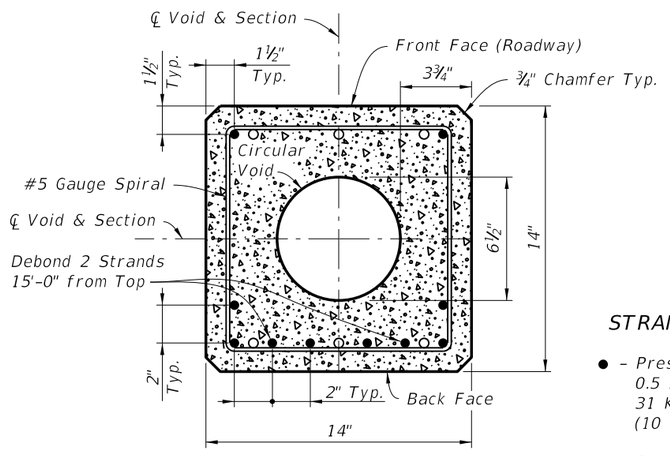

TIP END SECTION (TOP)
(For Dormant Strand Locations, See Section A-A)

STRAND LEGEND

● – Prestressed Strand
0.5 In. Grade 270, LRS
31 Kips Before Transfer
(10 strands total)

○ – Dormant Strand
0.5 In. Grade 270, LRS
(6 strands total)

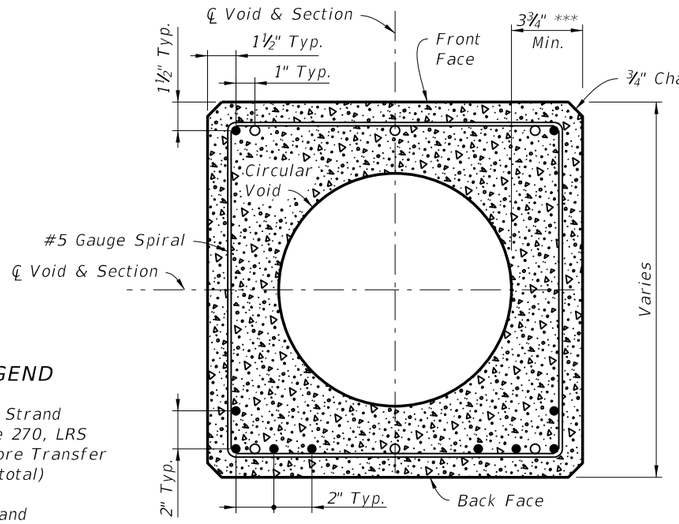

SECTION A-A
(Typical Square Section)

NOTES:

Work this Index with the Strain Pole Schedule in the plans.

Strands shown are continuous from Tip End to Butt End.

Elevation view scale is exaggerated vertically for clarity.

For final erection, tilt pole upright with single point attachment located a distance 10% L from the Tip End face.

* Taper includes pole width, strands, reinforcing and void. (0.081 In./Ft. per face)

** Support locations are for strand release, storage, lifting and transport. Keep Back Face oriented downward until final erection.

*** Dimension may vary from 3¾" to 5" to accommodate smaller radius of optional stepped (PVC) void. The void diameter shall not be less than 6½".

STRAIN POLE TYPE P-VII

C:\d\projects\standards\roadway\17700-s\17725-07.dgn rd960rh 2:19:35 PM 6/28/2012

LAST REVISION	REVISION	DESCRIPTION:		FDOT DESIGN STANDARDS 2013	CONCRETE POLES	INDEX NO.	SHEET NO.
01/01/12						17725	7

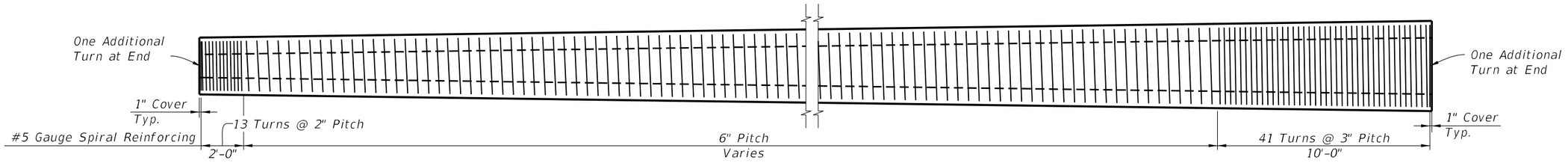

SPIRAL REINFORCING ELEVATION
(Strands, Holes, and Fixtures Not Shown)

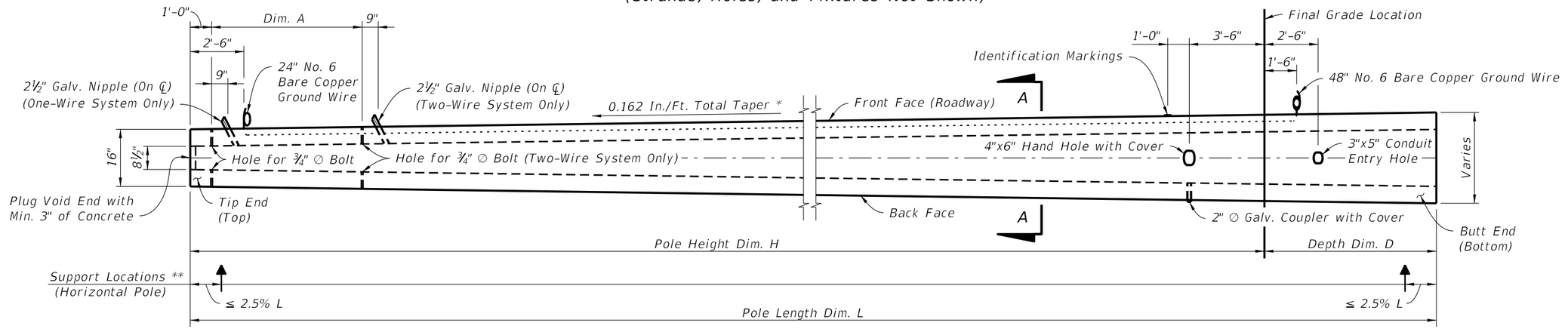

POLE ELEVATION
(Strands and Reinforcing Not Shown)

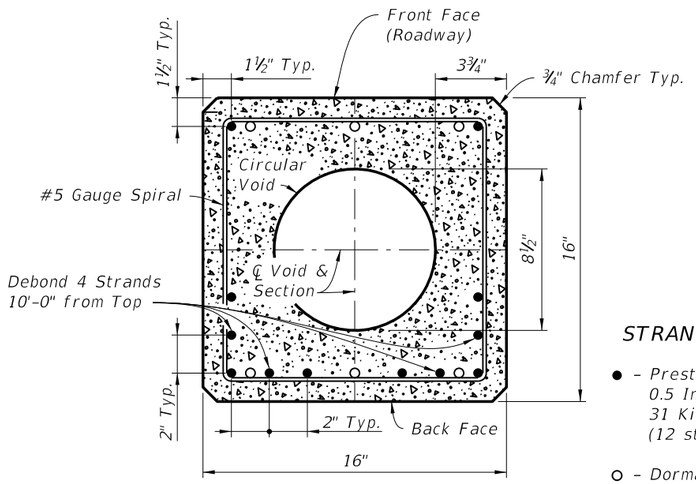

TIP END SECTION (TOP)
(For Dormant Strand Locations, See Section A-A)

STRAND LEGEND

● – Prestressed Strand 0.5 In. Grade 270, LRS 31 Kips Before Transfer (12 strands total)

○ – Dormant Strand 0.5 In. Grade 270, LRS (6 strands total)

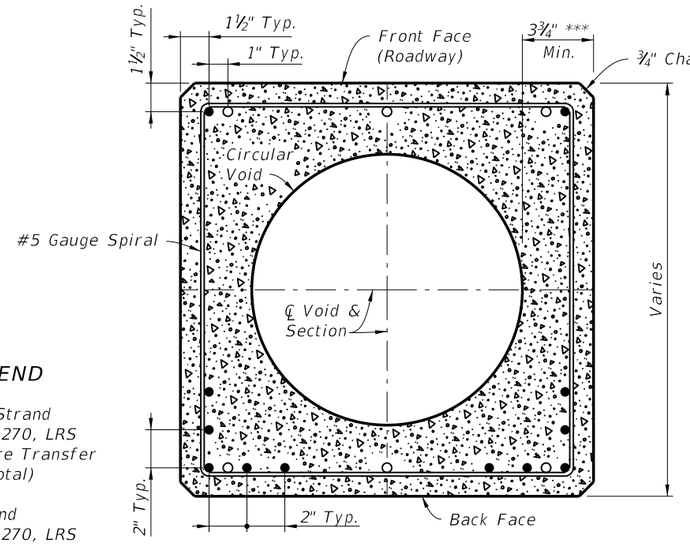

SECTION A-A
(Typical Square Section)

NOTES:

Work this Index with the Strain Pole Schedule in the plans.

Strands shown are continuous from Tip End to Butt End.

Elevation view scale is exaggerated vertically for clarity.

For final erection, tilt pole upright with single point attachment located a distance 10% L from the Tip End face.

* Taper includes pole width, strands, reinforcing and void. (0.081 In./Ft. per face)

** Support locations are for strand release, storage, lifting and transport. Keep Back Face oriented downward until final erection.

*** Dimension may vary from 3¾" to 5" to accommodate smaller radius of optional stepped (PVC) void. The void diameter shall not be less than 8½".

STRAIN POLE TYPE P-VIII

C:\d\projects\standards\roadway\17700-s\17725-08.dgn rd960rh 2:19:37 PM 6/28/2012

LAST REVISION	REVISION	DESCRIPTION:		FDOT DESIGN STANDARDS 2013	CONCRETE POLES	INDEX NO.	SHEET NO.
01/01/12						17725	8

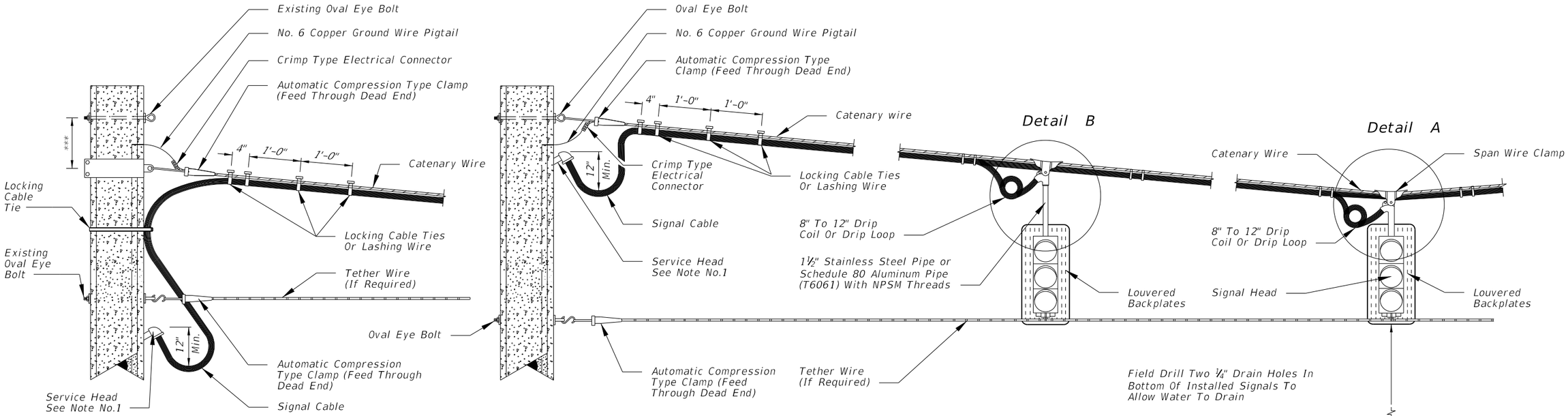

RETROFIT INSTALLATION

*** Clamp location shall be adjusted to compensate for reduced sag and vertical clearance to bottom of signal head.

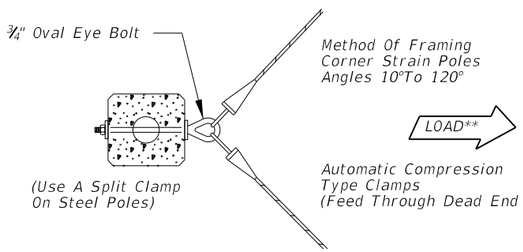

** The load face of pole shall be perpendicular to load.

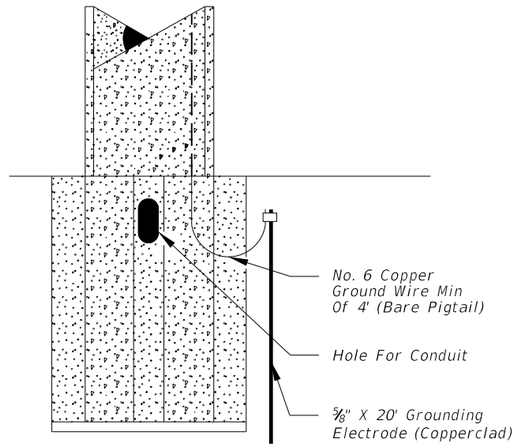

PRESTRESSED CONCRETE POLE NEW CONSTRUCTION

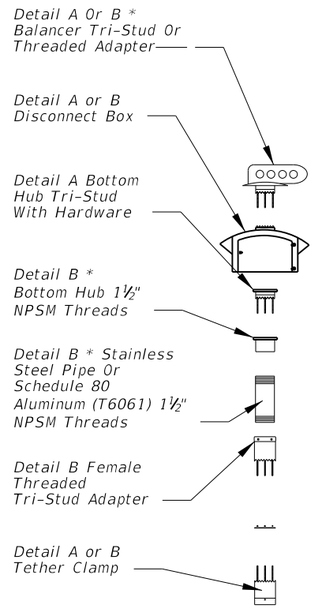

* For long pipe hangers a wire entrance head may be substituted for balancer and the drop pipe installed above the disconnect box.

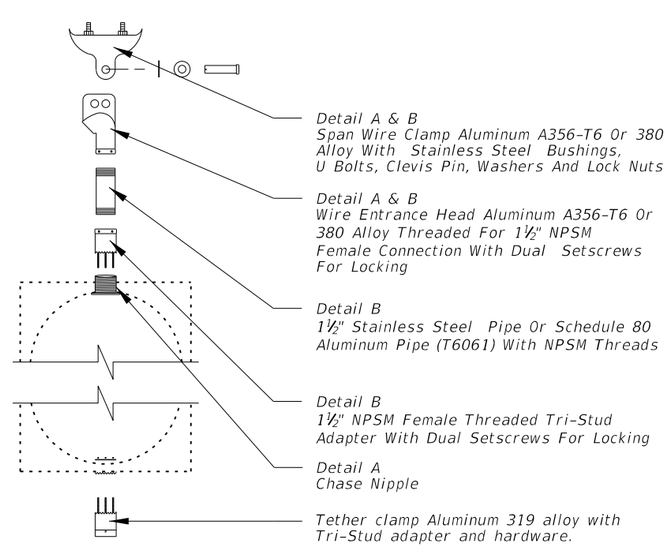

SINGLE POINT ATTACHMENT

Notes:

1. With the approval of the resident engineer, the service head hole for joint use poles may be drilled by the utility company at an angle of 90° but not less than 45° to the face of the pole.
2. Lashing wire should normally be used for distances of 12' or greater.
3. All hardware for signal attachment shall be stainless steel.
4. Meet all grounding requirements of Section 620 of the Standard Specifications.

LAST REVISION	REVISION	DESCRIPTION:		FDOT DESIGN STANDARDS 2013	SIGNAL CABLE & SPAN WIRE INSTALLATION DETAILS	INDEX NO.	SHEET NO.
01/01/12						17727	1

C:\d\projects\standards\roadway\17700-s\17727-01.dgn rd960rh 2:19:40 PM 6/28/2012

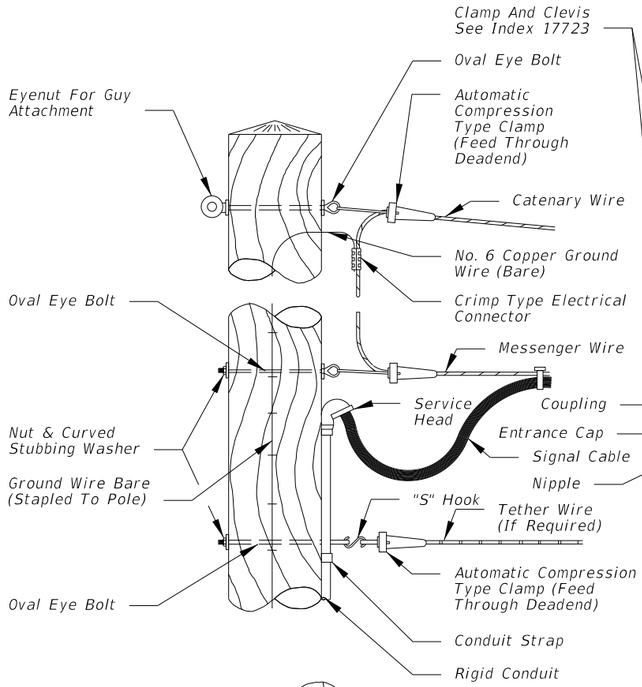

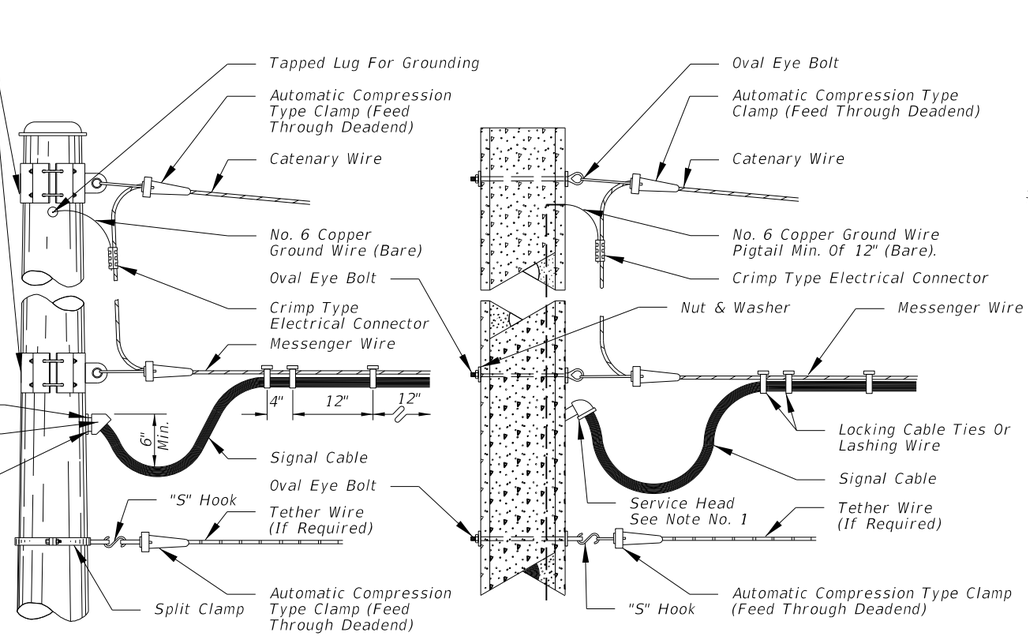

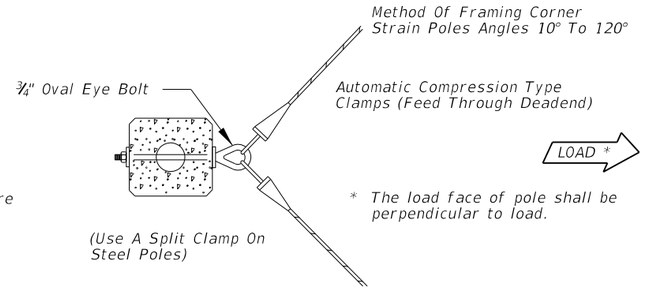

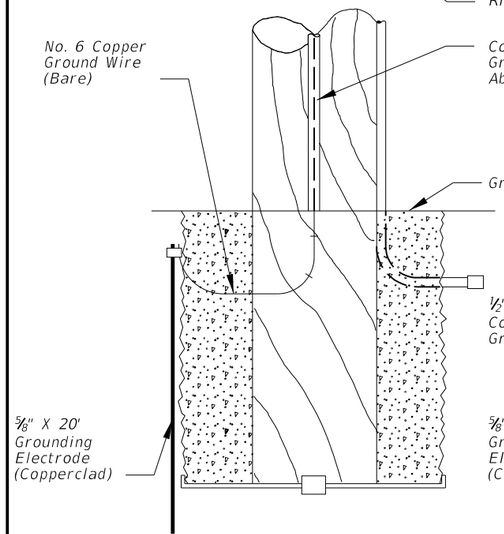

WOOD POLE

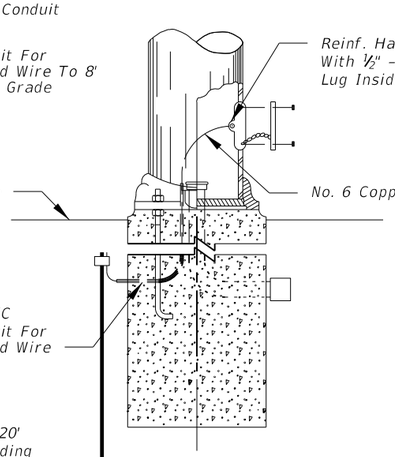

STEEL POLE

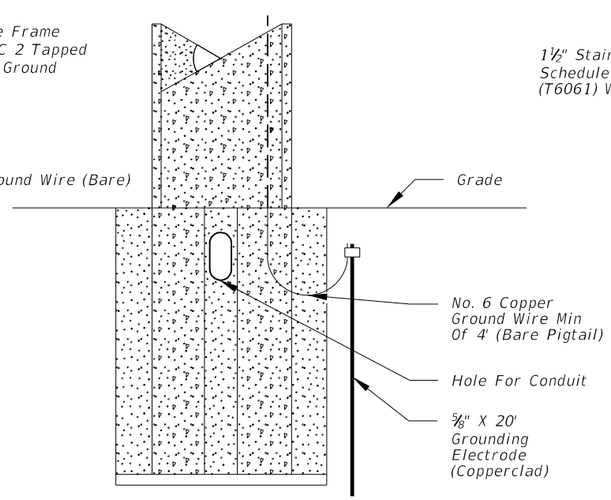

PRESTRESSED CONCRETE POLE

TWO POINT ATTACHMENT

Notes:

1. With the approval of the resident engineer, the service head hole for joint use poles may be drilled by the utility company at an angle of 90° but not less than 45° to the face of the pole.
2. Lashing wire should normally be used for distances of 12' or greater.
3. The overlapped connection of adjustable hangers shall use a minimum of 2 bolts with a minimum spacing of 2" between bolts.
4. Meet all grounding requirements of Section 620 of the Standard Specifications.

C:\d\projects\standards\roadway\17700-s\17727-02.dgn rd960rh 2:19:42 PM 6/28/2012

LAST REVISION	REVISION	DESCRIPTION:				
01/01/12			FDOT DESIGN STANDARDS 2013	SIGNAL CABLE & SPAN WIRE INSTALLATION DETAILS	INDEX NO. 17727	SHEET NO. 2

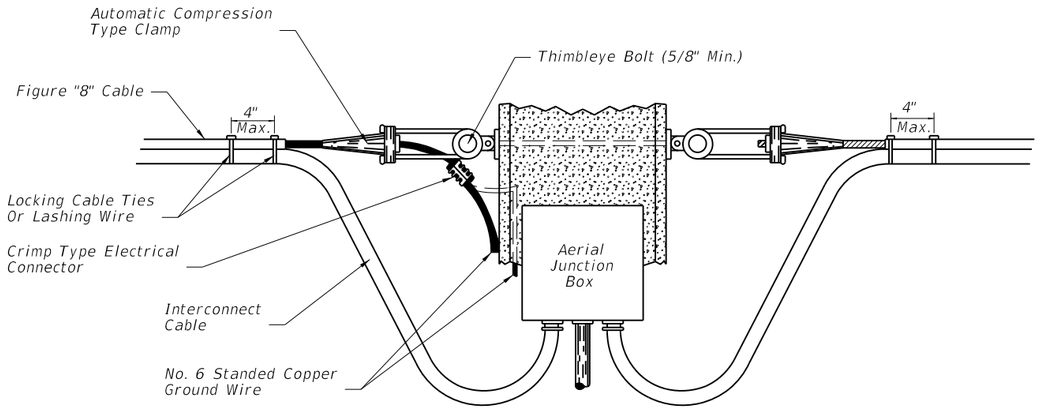

FIGURE A
CABLE DROP AND
TERMINATION DETAIL
AERIAL INTERCONNECT FIGURE "8"

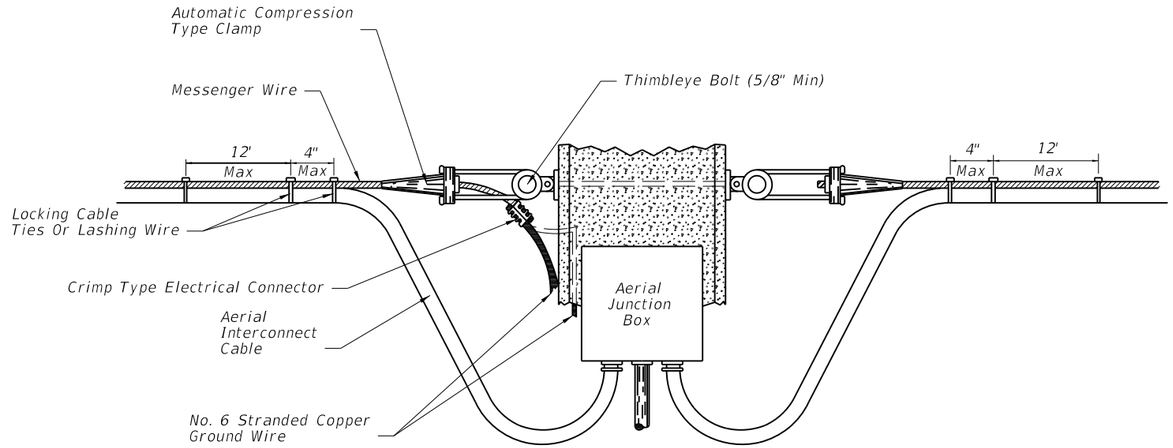

FIGURE B
CABLE DROP AND
TERMINATION DETAIL
AERIAL INTERCONNECT MESSENGER
WIRE WITH CLAMPS

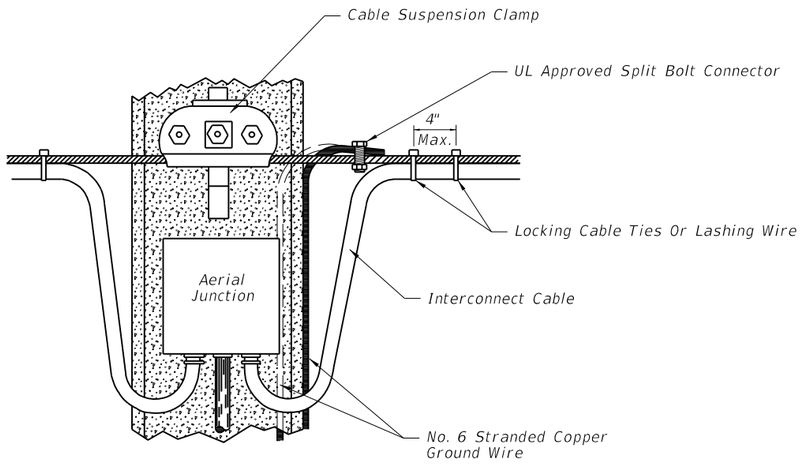

FIGURE C
CABLE DROP DETAIL
AERIAL INTERCONNECT MESSENGER
WIRE WITH CLAMPS

Notes:

1. The messenger wire of the interconnect cables shall be grounded to the copper ground wire of the pole or to the external wire extending down the pole.
2. When utilizing the external ground wire to the pole, a piece of ½" conduit shall extend up the pole externally to a point 8' above finish grade to protect the ground wire connecting the messenger wire to the ground rod.
3. Locking cable ties or lashing wire when used shall be placed no further than 12" apart except at the point of cable drop or terminations where one (1) shall be placed at the point where the cables separate from the messenger wire and another placed 4" (max) from that tie. When using figure "8" interconnect cable only the locking cable ties shall be used.
4. If accessible the internal ground wire of the support pole may be used to ground the messenger wire.
5. Lashing wire should normally be used for distances of 12' or greater.
6. Meet all grounding requirements of Section 620 of the Standard Specifications.

6/28/2012 2:19:44 PM rd960rh C:\d\projects\standards\roadway\17700-s\17733-01.dgn

LAST REVISION	REVISION	DESCRIPTION:		FDOT DESIGN STANDARDS 2013	AERIAL INTERCONNECT	INDEX NO.	SHEET NO.
07/01/00						17733	1

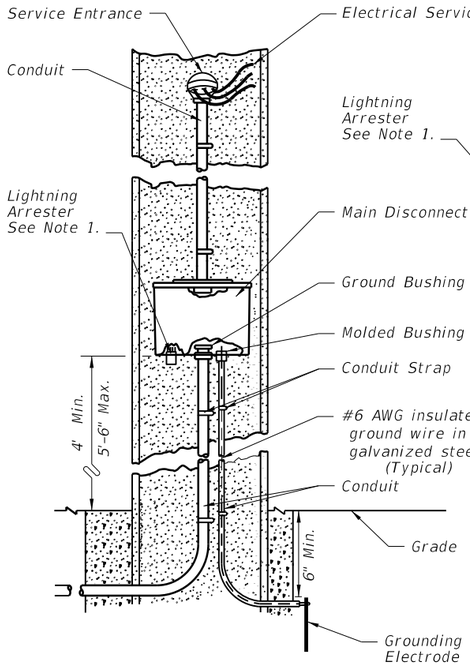

AERIAL FEED
(NO METER USED)
FIGURE A

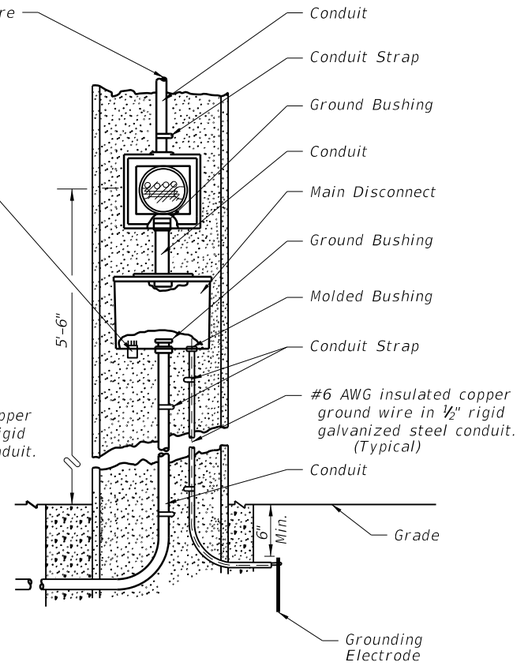

AERIAL FEED
(METER USED)
FIGURE B

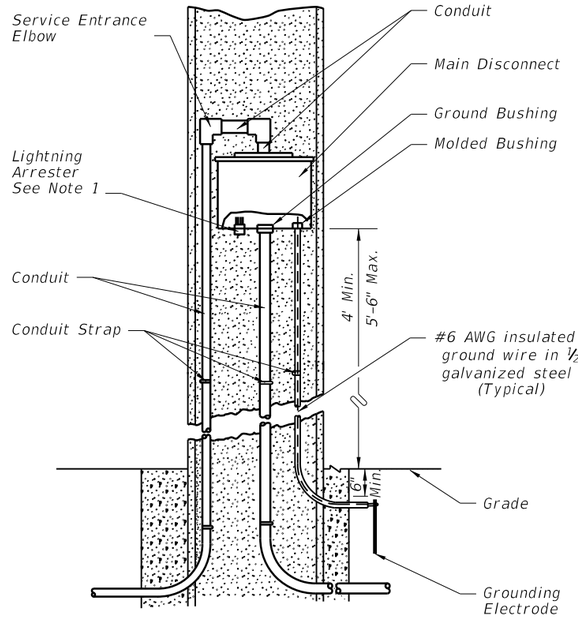

UNDERGROUND FEED
(NO METER USED)
FIGURE C

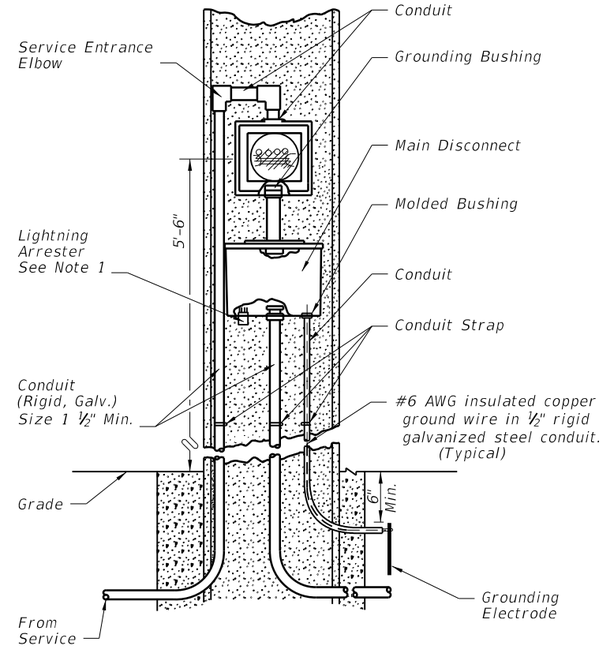

TYPE "B" UNDERGROUND FEED
(METER USED)
FIGURE D

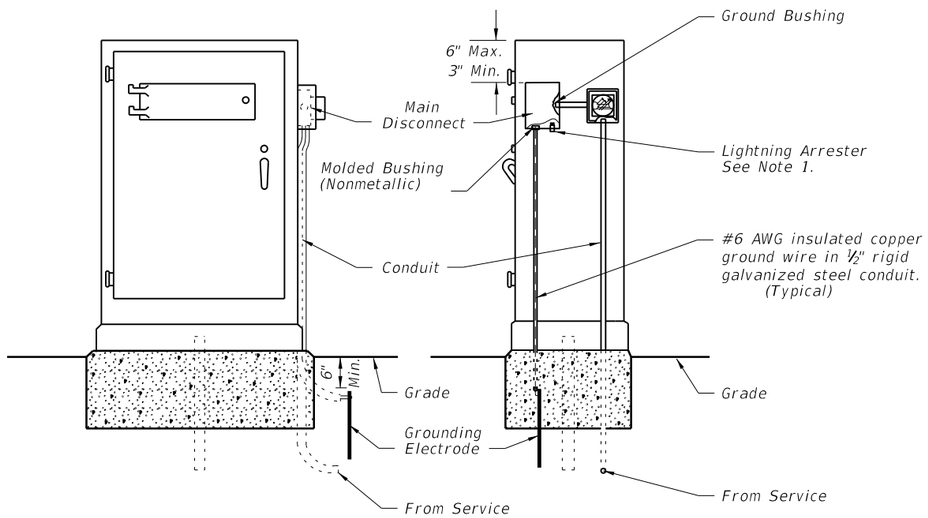

UNDERGROUND CABINET MOUNTED
(METER USED)
FIGURE E

NOTES:

1. The lightning arrester can be located on the side or bottom of the main disconnect enclosure at the Contractor's Option.
2. Liquidtight flexible conduit is approved for use from the electrical disconnect to the cabinet when both are installed on the same pole.
3. Bond all elements together to form an Intersection Grounding Network in accordance with Section 620 of the Department's current Standard Specifications for Road and Bridge Construction. The bond wire shall be run in conduit with the Electrical Service Wire or Signal Cable.
4. Meet all grounding requirements of Section 620 of the Standard Specifications.
5. The Main Disconnect shall be lockable by padlock and four keys provided to the maintaining agency. The door shall have a minimum of three hinges and be lockable. No screws to be used to attach door.
6. The Main Disconnect shall be Nema 3R or better.

C:\d\projects\standards\roadway\17700-s\17736-01.dgn rd960rh 2:19:47 PM 6/28/2012

LAST REVISION	REVISION	DESCRIPTION:		FDOT DESIGN STANDARDS 2013	ELECTRIC POWER SERVICE	INDEX NO.	SHEET NO.
07/01/09						17736	1

POLE SELECTION TABLE – SINGLE ARM – WITH & WITHOUT LUMINAIRE					
ARM TYPE	D1	D3	D5	D6	D7
POLE TYPE	S1 & S21 Lum	S2 & S22 Lum	S3 & S23 Lum	S4 & S24 Lum	S6

POLE SELECTION TABLE – DOUBLE ARM – WITHOUT LUMINAIRE										
ARM TYPE	D1 - D1	D3 - D1	D5 - D2	D6 - D2	D4 - D4	D5 - D4	D6 - D4	D5 - D5	D6 - D5	D6 - D6
POLE TYPE	S1	S2	S3	S4	S3	S4	S4	S4	S4	S5

Arm 1 is listed first

ARM DESIGN TABLE – ALL CASES												
ARM TYPE	ARM LENGTH	MAST ARM				ARM EXTENSION				ARM CONNECTION & WELDS		
		FA/SA (ft)	FB/SB (in)	FC/SC (in)	FD/SD (in)	FE/SE (ft)	FF/SF (in)	FG/SG (in)	FH/SH (in)	HT (in)	FJ/SJ (in)	FK/SK (in)
D1	36'–0"	36	8.96	14	0.1793					20	25	2.5
D2	36'–0"	36	8.96	14	0.1793					30	36	3
D3	46'–0"	36.3	8.92	14	0.1793	11.7	13.36	15	0.313	20	25	2.5
D4	46'–0"	36.3	8.92	14	0.1793	11.7	13.36	15	0.313	30	36	3
D5	60'–0"	36	7.96	13	0.1793	26	12.36	16	0.375	30	36	3
D6	70'–6"	39.4	9.49	15	0.1793	33.1	14.37	19	0.375	30	36	3
D7	78'–0"	40	8.44	14	0.1793	40	13.40	19	0.375	30	34	3

Arm Camber Angle = 2 degrees

POLE, CONNECTION AND SHAFT DESIGN TABLE – SINGLE & DOUBLE ARM																							
POLE TYPE	UA (ft)	UC (in)	UD (in)	UE (in)	UG (ft)	UPRIGHT BASE CONNECTION					CONNECTION PLATE DATA									DRILLED SHAFT DATA					
						No. Bolts	BA (in)	BB (in)	BC (in)	BF (in)	HT (in)	FJ/SJ (in)	FL/SL (in)	FN/SN (in)	FO/SO (in)	FP/SP (in)	FR/SR (in)	FS/SS (in)	FT/ST (in)	DA (ft)	DB (ft)	RA	RB	RC	RD (in)
S1	24	12.64	16	0.375		6	30	2.5	1.75	36	20	25	0.75	0.438	15.5	1	2	8	0.438	12	4	11	14	9	12
S2	24	14.64	18	0.375		6	32	2.5	1.75	36	20	25	0.75	0.438	15.5	1	2	8	0.438	12	4.5	11	16	9	12
S3	24	17.64	21	0.375		6	37	2.5	2	40	30	36	0.75	0.438	22	1.25	2.5	12.5	0.438	15	4.5	11	16	10	8
S4	24	22.64	26	0.375		6	42	2.5	2	40	30	36	0.75	0.438	22	1.25	2	12.5	0.438	17	5	11	18	10	8
S5	24	23.64	27	0.375		6	45	2.5	2.25	45	30	36	0.75	0.438	22	1.25	2	12.5	0.438	18	5	11	18	10	8
S6	24	21.64	25	0.375		6	41	2.5	2	40	30	34	0.75	0.5	16.5	1.25	2	12.5	0.5	15	5	11	18	10	8
S21 Lum	39	10.54	16	0.375	37.5	6	30	2.5	1.75	40	20	25	0.75	0.438	11.5	1	2	8	0.438	12	4	11	14	9	12
S22 Lum	39	12.54	18	0.375	37.5	6	32	2.5	1.75	40	20	25	0.75	0.438	12.5	1	2	8	0.438	12	4.5	11	16	9	12
S23 Lum	39	15.54	21	0.375	37.5	6	37	2.5	2	40	30	36	0.75	0.438	15	1.25	2.5	12.5	0.438	14	4.5	11	16	10	8
S24 Lum	39	20.54	26	0.375	37.5	6	42	2.5	2	40	30	36	0.75	0.438	17	1.25	2	12.5	0.438	15	5	11	18	10	8

LUMINAIRE AND LUMINAIRE CONNECTION											
LA (ft)	LB (ft)	LC (in)	LD (in)	LE	LF (ft)	LG (in)	LH (in)	LJ (in)	LK (in)	LL (deg)	UG (ft)
40	10	3	0.125	0.5	8	0.5	0.75	0.25	0.25	0	37.5

Notes:
1. Work this Index with Index No. 17745.
2. Design Wind Speed = 150 mph with Signal Backplates.

"D" MAST ARMS

LAST REVISION	REVISION	DESCRIPTION:		FDOT DESIGN STANDARDS 2013	STANDARD MAST ARM ASSEMBLIES	INDEX NO.	SHEET NO.
01/01/12						17743	1

C:\d\projects\standards\roadway\17700-s\17743-01.dgn rd960rh 2:19:49 PM 6/28/2012

POLE SELECTION TABLE – SINGLE ARM – WITH & WITHOUT LUMINAIRE					
ARM TYPE	E1	E3	E5	E6	E7
POLE TYPE	T1 & T21 Lum	T2 & T22 Lum	T3 & T23 Lum	T4 & T24 Lum	T6

POLE SELECTION TABLE – DOUBLE ARM – WITHOUT LUMINAIRE										
ARM TYPE	E1 - E1	E3 - E1	E5 - E2	E6 - E2	E4 - E4	E5 - E4	E6 - E4	E5 - E5	E6 - E5	E6 - E6
POLE TYPE	T1	T2	T3	T4	T3	T4	T4	T4	T4	T5

Arm 1 is listed first

ARM DESIGN TABLE – ALL CASES												
ARM TYPE	ARM LENGTH	MAST ARM				ARM EXTENSION				ARM CONNECTION & WELDS		
		FA/SA (ft)	FB/SB (in)	FC/SC (in)	FD/SD (in)	FE/SE (ft)	FF/SF (in)	FG/SG (in)	FH/SH (in)	HT (in)	FJ/SJ (in)	FK/SK (in)
E1	36'-0"	36.0	5.96	11	0.25					22	23	2
E2	36'-0"	36.0	5.96	11	0.25					30	32	2.75
E3	46'-0"	36.3	7.06	12.14	0.25	11.7	11.36	13	0.313	22	23	2
E4	46'-0"	36.3	7.06	12.14	0.25	11.7	11.36	13	0.313	30	32	2.75
E5	60'-0"	36.0	6.10	11.14	0.25	26	10.36	14	0.375	30	32	2.75
E6	70'-6"	39.4	6.63	12.15	0.25	33.1	11.37	16	0.375	30	32	2.75
E7	78'-0"	40.0	7.50	13.10	0.1793	40	12.40	18	0.375	30	32	2.5

Arm Camber Angle = 2 degrees

POLE, CONNECTION AND SHAFT DESIGN TABLE – SINGLE & DOUBLE ARM																							
POLE TYPE	UA (ft)	UC (in)	UD (in)	UE (in)	UG (ft)	UPRIGHT BASE CONNECTION					CONNECTION PLATE DATA									DRILLED SHAFT DATA					
						No. Bolts	BA (in)	BB (in)	BC (in)	BF (in)	HT (in)	FJ/SJ (in)	FL/SL (in)	FN/SN (in)	FO/SO (in)	FP/SP (in)	FR/SR (in)	FS/SS (in)	FT/ST (in)	DA (ft)	DB (ft)	RA	RB	RC	RD (in)
T1	24	10.64	14	0.375		6	26	2.5	1.5	36	22	23	0.5	0.375	14	1	2.0	9	0.375	11	4	11	14	8	12
T2	24	12.64	16	0.375		6	28	2.5	1.5	36	22	23	0.5	0.375	14	1	2.0	9	0.375	12	4	11	14	9	12
T3	24	15.64	19	0.375		6	35	2.5	2	40	30	32	0.75	0.375	19.5	1.25	2.25	12.5	0.375	12	4.5	11	16	9	12
T4	24	18.64	22	0.5		6	38	2.5	2	40	30	32	0.75	0.375	19.5	1.25	2.0	12.5	0.375	15	4.5	11	16	10	8
T5	24	18.64	22	0.5		6	38	2.5	2	40	30	32	0.75	0.375	19.5	1.25	2.0	12.5	0.375	16	4.5	11	16	10	8
T6	24	18.64	22	0.375		6	38	2.5	2	40	30	32	0.75	0.438	15	1.25	2.0	12.5	0.438	14	4.5	11	16	10	8
T21 Lum	39	8.54	14	0.375	37.5	6	26	2.5	1.5	40	22	23	0.5	0.375	10	1	2.0	9	0.375	11	4	11	14	8	12
T22 Lum	39	10.54	16	0.375	37.5	6	30	2.5	1.75	40	22	23	0.5	0.375	11	1	2.0	9	0.375	12	4	11	14	9	12
T23 Lum	39	13.54	19	0.375	37.5	6	35	2.5	2	40	30	32	0.75	0.375	13	1.25	2.25	12.5	0.375	12	4.5	11	16	9	12
T24 Lum	39	16.54	22	0.375	37.5	6	38	2.5	2	40	30	32	0.75	0.375	15	1.25	2.0	12.5	0.375	14	4.5	11	16	10	12

LUMINAIRE AND LUMINAIRE CONNECTION											
LA (ft)	LB (ft)	LC (in)	LD (in)	LE	LF (ft)	LG (in)	LH (in)	LJ (in)	LK (in)	LL (deg)	UG (ft)
40	10	3	0.125	0.5	8	0.5	0.75	0.25	0.25	0	37.5

Notes:
1. Work this Index with Index No. 17745.
2. Design Wind Speed = 150 mph without Signal Backplates.
130 mph with or without Signal Backplates.
110 mph with or without Signal Backplates.

"E" MAST ARMS

C:\d\projects\standards\roadway\17700-s\17743-02.dgn rd960rh 2:19:51 PM 6/28/2012

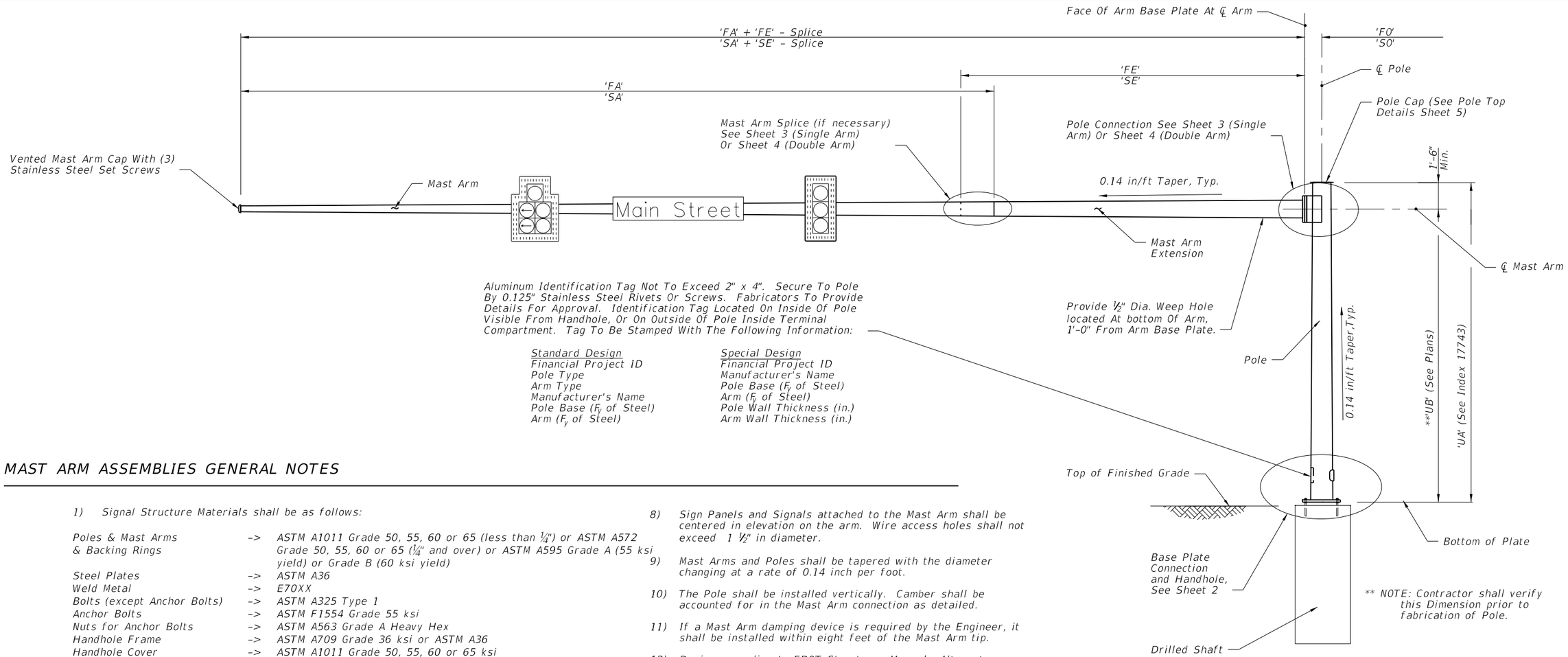

ELEVATION VIEW

(Single Arm Shown, Double Arm Similar)
(Luminaire Arm Not Shown)

Aluminum Identification Tag Not To Exceed 2" x 4". Secure To Pole By 0.125" Stainless Steel Rivets Or Screws. Fabricators To Provide Details For Approval. Identification Tag Located On Inside Of Pole Visible From Handhole, Or On Outside Of Pole Inside Terminal Compartment. Tag To Be Stamped With The Following Information:

Standard Design	Special Design
Financial Project ID	Financial Project ID
Pole Type	Manufacturer's Name
Arm Type	Pole Base (F_y of Steel)
Manufacturer's Name	Arm (F_y of Steel)
Pole Base (F_y of Steel)	Pole Wall Thickness (in.)
Arm (F_y of Steel)	Arm Wall Thickness (in.)

MAST ARM ASSEMBLIES GENERAL NOTES

1) Signal Structure Materials shall be as follows:

Poles & Mast Arms & Backing Rings	–>	ASTM A1011 Grade 50, 55, 60 or 65 (less than ¼") or ASTM A572 Grade 50, 55, 60 or 65 (¼" and over) or ASTM A595 Grade A (55 ksi yield) or Grade B (60 ksi yield)
Steel Plates	–>	ASTM A36
Weld Metal	–>	E70XX
Bolts (except Anchor Bolts)	–>	ASTM A325 Type 1
Anchor Bolts	–>	ASTM F1554 Grade 55 ksi
Nuts for Anchor Bolts	–>	ASTM A563 Grade A Heavy Hex
Handhole Frame	–>	ASTM A709 Grade 36 ksi or ASTM A36
Handhole Cover	–>	ASTM A1011 Grade 50, 55, 60 or 65 ksi
Caps	–>	ASTM A1011 Grade 50, 55, 60 or 65 ksi or ASTM B209
Nut Covers	–>	ASTM B26 (319–F)
Stainless Steel Screws	–>	AISI Type 316
Threaded Bars/Studs	–>	ASTM A36 or ASTM A307

2) Reinforcing Steel shall be ASTM A615 Grade 60 ksi.

3) Concrete shall be Class IV (Drilled Shaft) with a minimum 28–day compressive strength of 4,000 psi for all environmental classifications.

4) All welding shall conform to American Welding Society Structural Welding Code (Steel) ANSI/AWS D1.1 (current edition).

5) All steel items shall be galvanized as follows:
All Nuts, Bolts, Washers and Threaded Bars/Studs –> F2329
All other steel items (including Pole & Mast Arm) –> ASTM A123

6) Locate handhole 180° from arm on single arm poles or 180° from first arm of double arm poles or see special instructions on Mast Arm Tabulation Sheet.

7) Except for Anchor Bolts, all bolt hole diameters shall be equal to the bolt diameter plus 1/16", prior to galvanizing. Hole diameters for Anchor Bolts shall not exceed the bolt diameter plus ½".

8) Sign Panels and Signals attached to the Mast Arm shall be centered in elevation on the arm. Wire access holes shall not exceed 1 ½" in diameter.

9) Mast Arms and Poles shall be tapered with the diameter changing at a rate of 0.14 inch per foot.

10) The Pole shall be installed vertically. Camber shall be accounted for in the Mast Arm connection as detailed.

11) If a Mast Arm damping device is required by the Engineer, it shall be installed within eight feet of the Mast Arm tip.

12) Design according to FDOT Structures Manual. Alternate Designs for Special Mast Arm Assemblies are not allowed.

13) Provide "J", or "C"–Hook at top of pole for signal cable support.

14) First and Second Arm Camber Angle = 2°.

15) Details for Signal and Sign Locations, Signal Head attachment, Sign Attachment, Pedestrian Head Attachment, and Foundation Conduit are not shown for clarity.

16) One hundred percent of full–penetration groove welds and a random 25 percent of partial penetration groove welds shall be inspected. Full–penetration groove weld inspection shall be performed by nondestructive methods of radiography or ultrasonics.

17) Use of split lock washer is not permitted.

18) In accordance with Specifications 5–1.4.2, Shop Drawings are only required for additions, deletions, or modifications to this Design Standard.

19) Verify CSL access tubes will not interfere with anchor bolt installation before excavating the shaft. When CSL access tube locations conflict with anchor bolt locations, move the CSL access tube location +/– two inches along the inner circumference of the reinforcing cage. Notify the Engineer before excavating the shaft if the CSL access tube locations cannot be moved out of conflict with anchor bolt locations.

TYPICAL ELEVATION AND NOTES

C:\d\projects\standards\roadway\17700-s\17745-01.dgn
rd960rh
2:19:53 PM
6/28/2012

LAST REVISION	REVISION	DESCRIPTION:	FDOT DESIGN STANDARDS 2013	MAST ARM ASSEMBLIES	INDEX NO.	SHEET NO.
01/01/12					17745	1

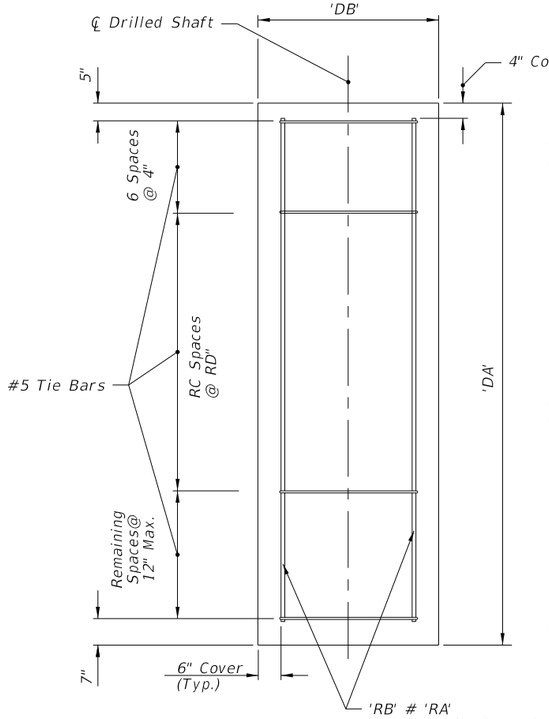

SECTION A-A

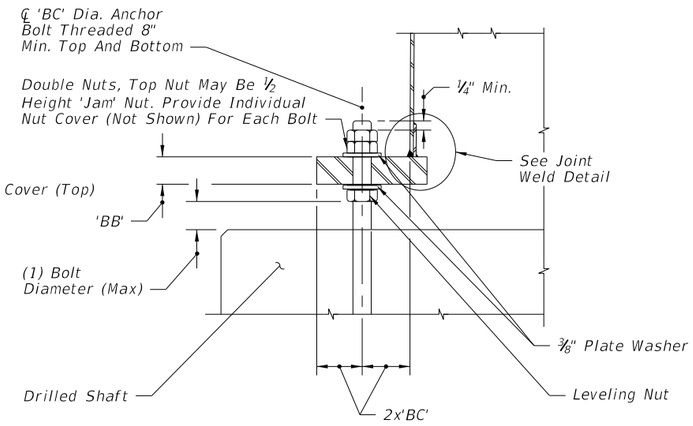

SECTION D-D

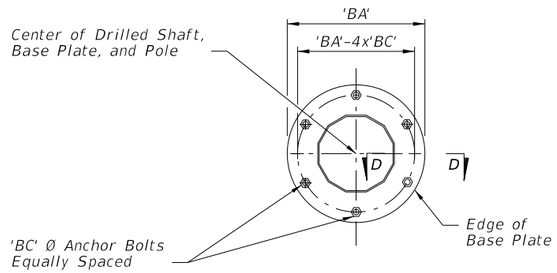

SECTION C-C
(6 Anchor Bolts)

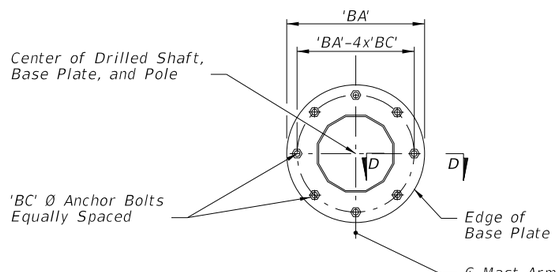

SECTION C-C
Alternate Detail
(8 Anchor Bolts)

NOTE:
See Index No. 17743 and the plans for actual quantity of bolts.

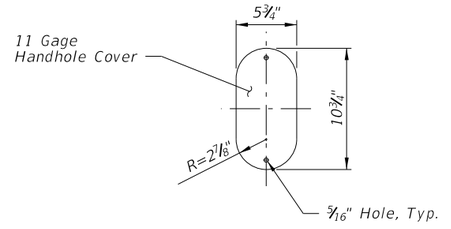

HANDHOLE COVER

Note:
Handhole Cover may be omitted when Terminal Compartment is provided.

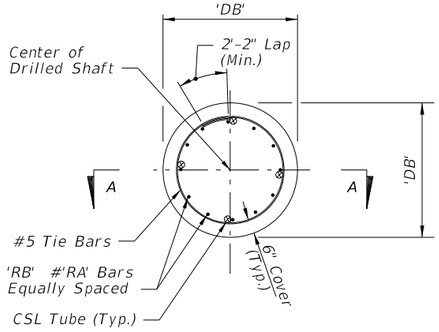

FOUNDATION PLAN

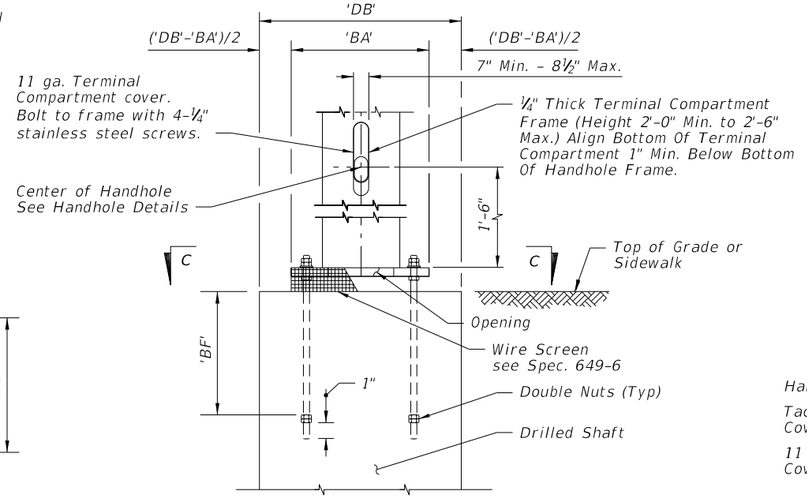

BASE PLATE AND ANCHORAGE ELEVATION
(Reinforcement Not Shown)

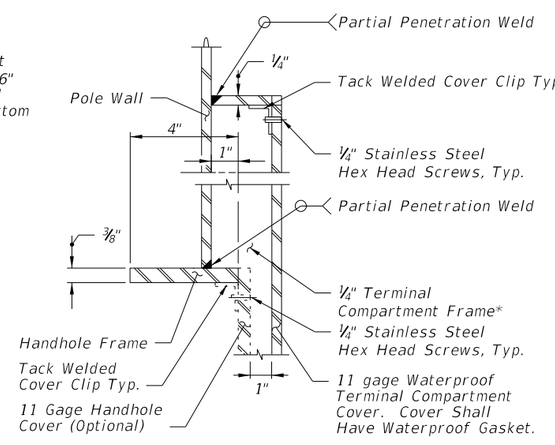

SECTION E-E
(Thru Handhole & Terminal Compartment)

* Terminal Compartment is optional. See Mast Arm Tabulation to see if required and for locations.

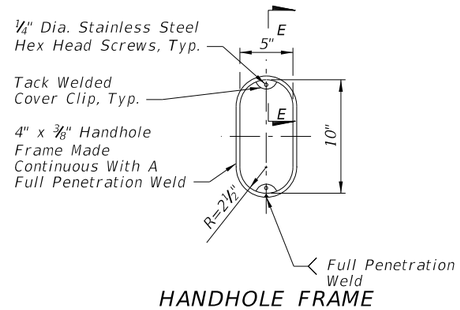

HANDHOLE FRAME
(w/Terminal Compartment Omitted)

TYPICAL FOUNDATION AND BASE PLATE DETAILS

LAST REVISION	REVISION	DESCRIPTION:			INDEX NO.	SHEET NO.
07/01/12			FDOT DESIGN STANDARDS 2013	MAST ARM ASSEMBLIES	17745	2

6/28/2012 2:19:55 PM rd960rh C:\d\projects\standards\roadway\17700-s\17745-02.dgn

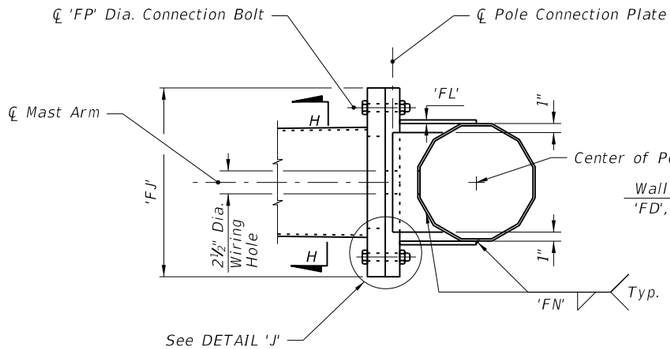

SECTION F-F

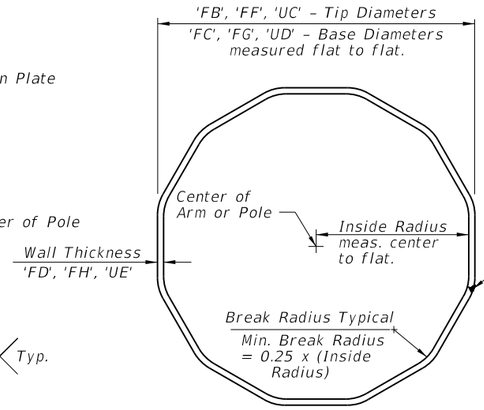

SECTION H-H

NOTE:
Longitudinal seam welds within six inches of circumferential welds shall be complete penetration welds. Longitudinal seam welds at telescopic field splices shall be complete penetration welds for the splice length plus six inches. Up to two longitudinal seam welds maximum permitted.

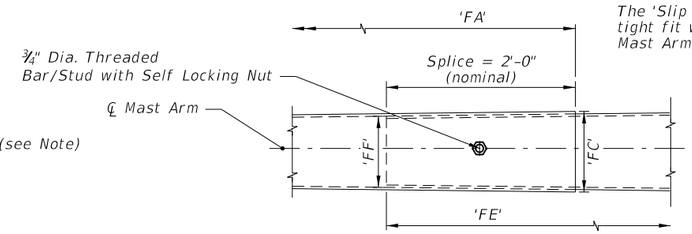

The 'Slip Joint' splice shall be a tight fit with no change in the Mast Arm slope due to the splice.

Arm Splice Detail

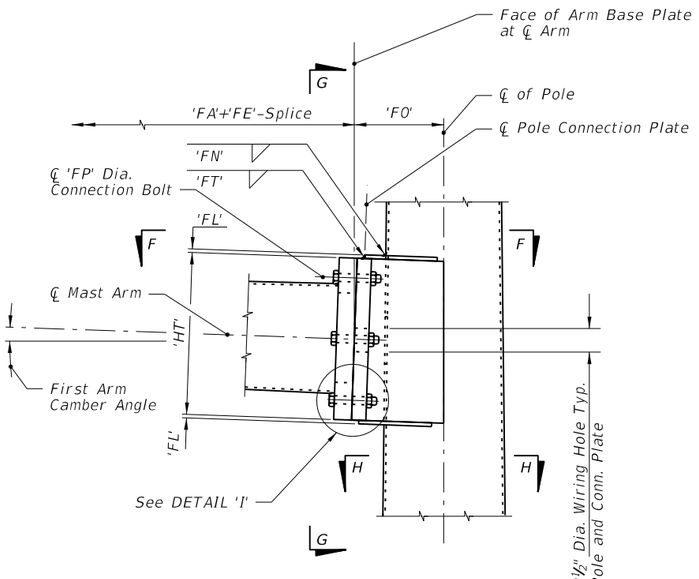

ELEVATION
(Single Arm Connection)

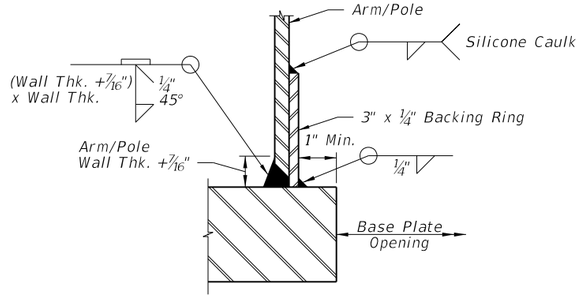

JOINT WELD DETAIL

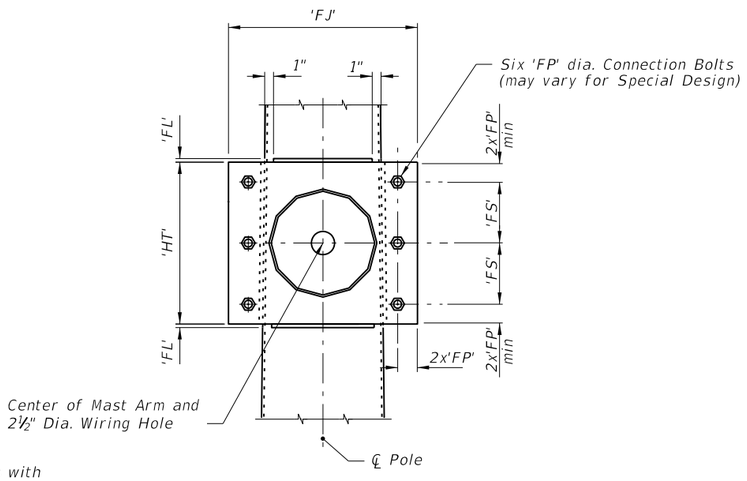

SECTION G-G

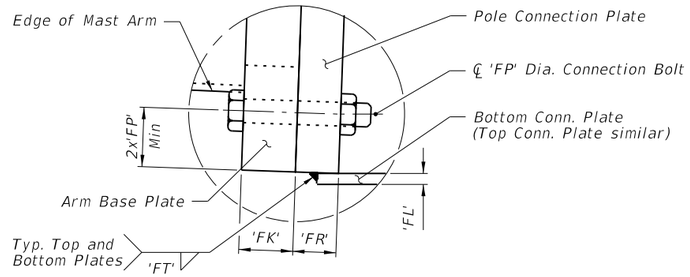

DETAIL 'I'

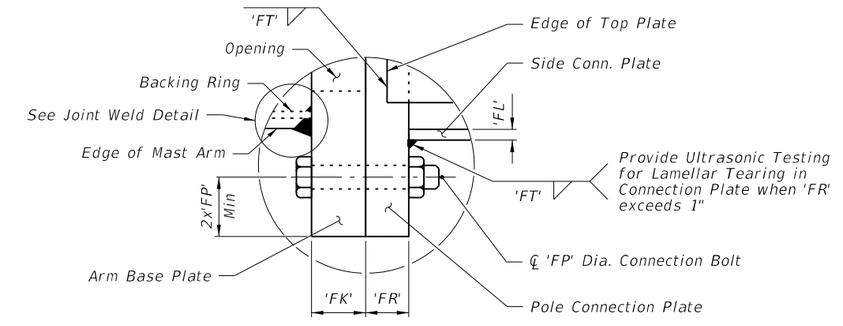

DETAIL 'J'

NOTE:

1. Details shown on this sheet are for 12 sided pole sections. However, sections with more than 12 sides and round sections are permitted provided outside diameter and wall thickness are not reduced.
2. Mast Arm and Connection Plates shall be match marked to ensure proper assembly.

TYPICAL SINGLE ARM CONNECTION DETAILS

C:\d\projects\standards\roadway\17700-s\17745-03.dgn rd960rh 2:19:57 PM 6/28/2012

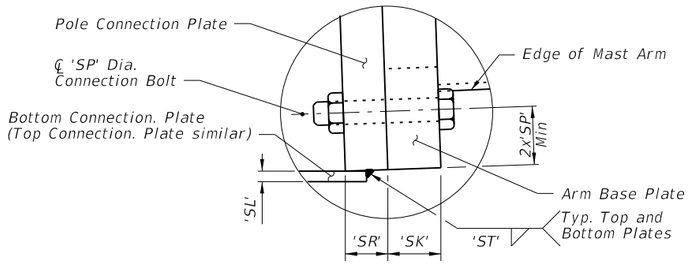

DETAIL 'N'

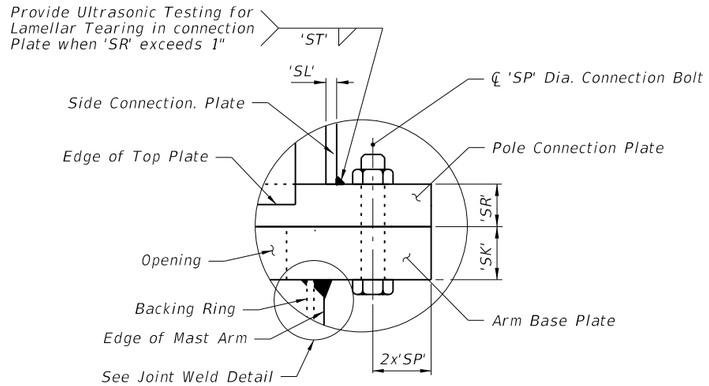

DETAIL 'O'

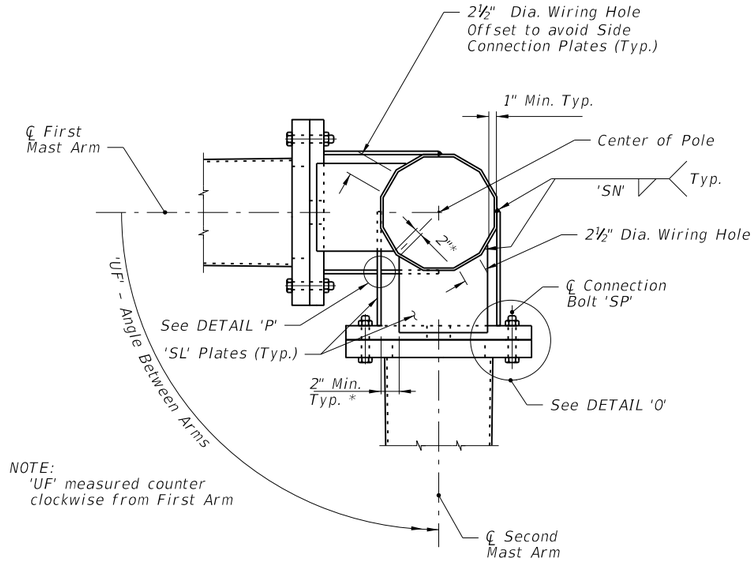

SECTION K-K

* Adjust width of top and bottom Connection Plates to maintain minimum clearance shown

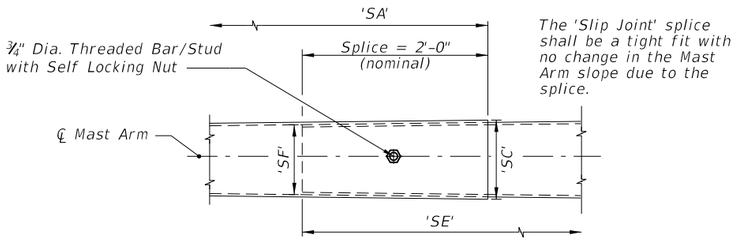

Arm Splice Detail

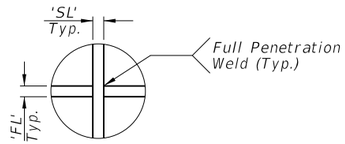

DETAIL 'P'

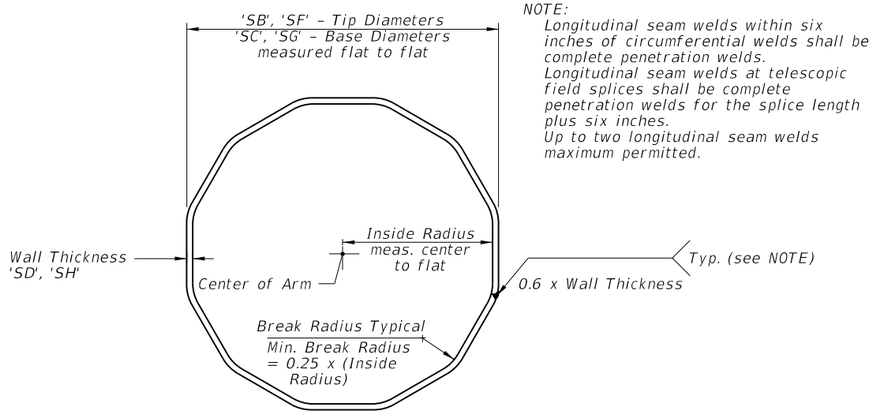

SECTION M-M

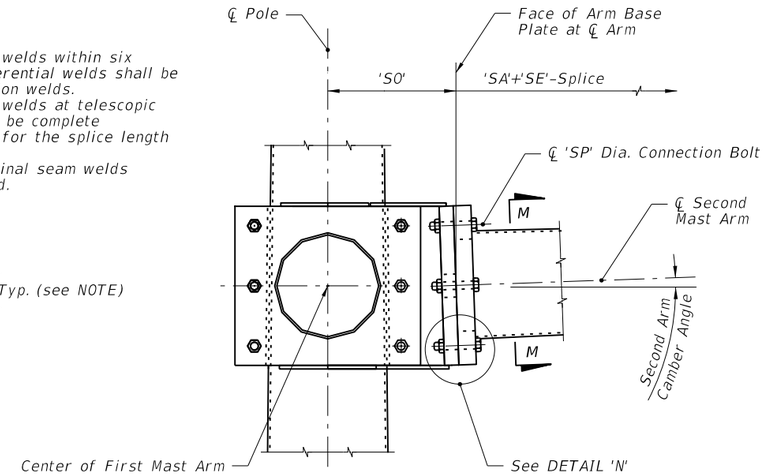

SECTION L-L

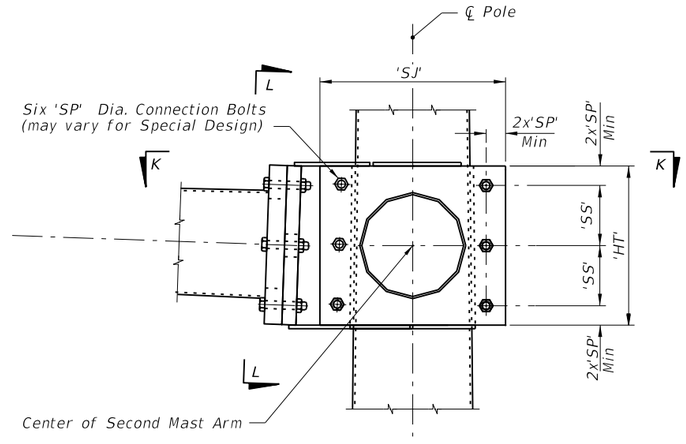

ELEVATION
(Double Arm Connection)

NOTE:
1. Details shown on this sheet are for 12 sided pole sections. However, sections with more than 12 sides and round sections are permitted provided outside diameter and wall thickness are not reduced.

2. Mast Arm and Connection Plates shall be match marked to ensure proper assembly.

TYPICAL DOUBLE ARM CONNECTION DETAILS

LAST REVISION	REVISION	DESCRIPTION:		FDOT DESIGN STANDARDS 2013	MAST ARM ASSEMBLIES	INDEX NO.	SHEET NO.
01/01/12						17745	4

C:\d\projects\standards\roadway\17700-s\17745-04.dgn rd960rh 2:20:00 PM 6/28/2012

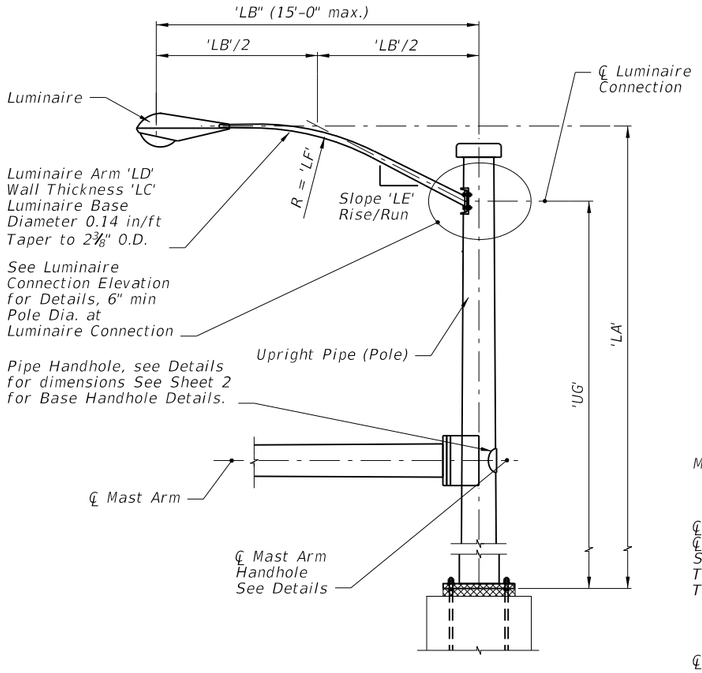

LUMINAIRE ELEVATION

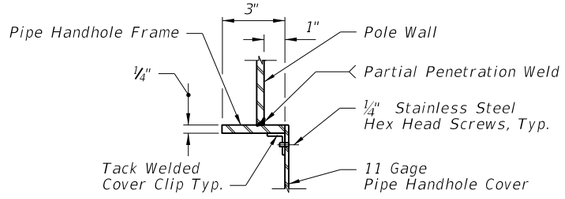

SECTION E-E

(thru Pipe Handhole)

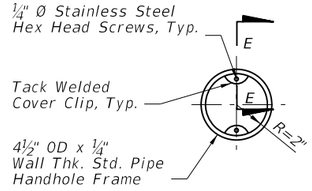

PIPE HANDHOLE FRAME

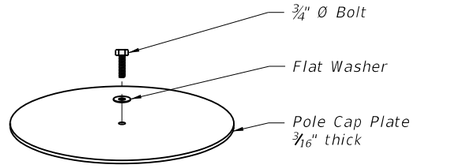

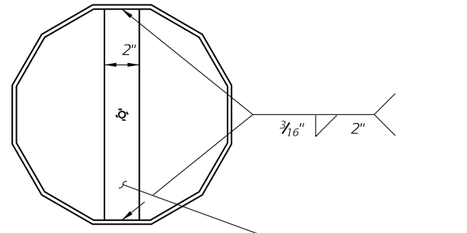

TOP VIEW

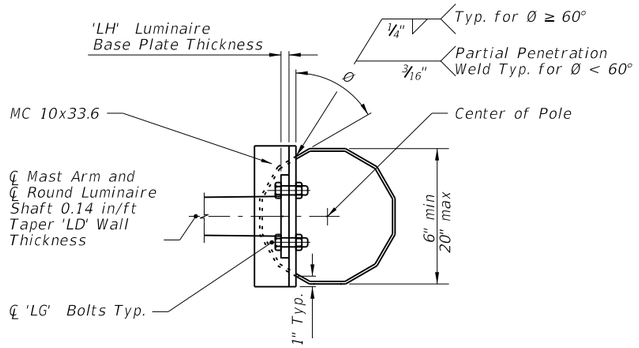

SECTION A-A

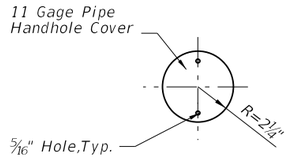

PIPE HANDHOLE COVER

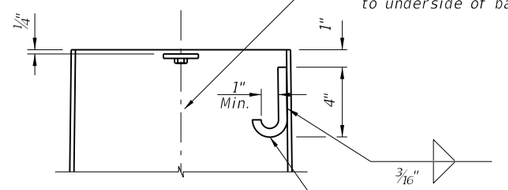

POLE TOP CUT-AWAY

(Option 'a')

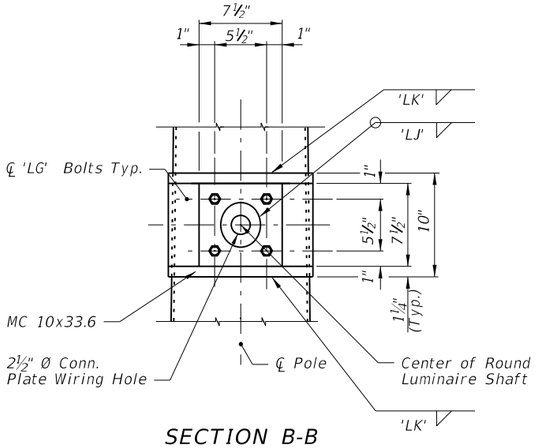

SECTION B-B

NOTE:
The Fabricator may substitute a 1/2" thick bent plate with the same flange width, height, and length as the MC 10x33.6 Channel section.

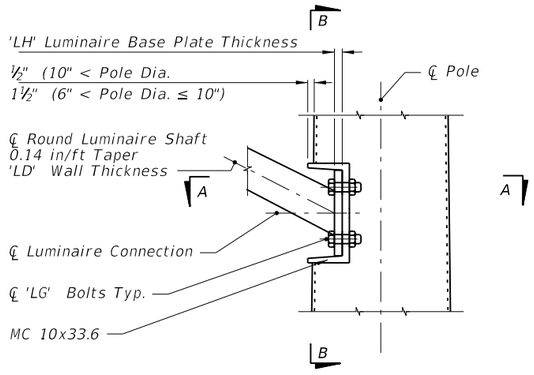

LUMINAIRE CONNECTION ELEVATION

NOTE:
The Pole shown on this sheet is a 12 sided section. However, sections with more than 12 sides and round sections are permitted provided outside diameter and wall thickness are not reduced

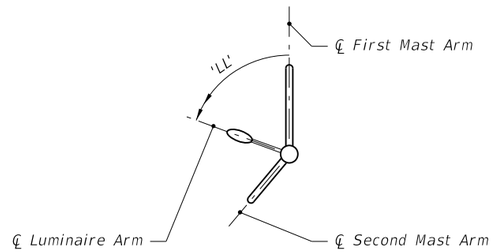

LUMINAIRE ORIENTATION

NOTE:
'LL' measured counter clockwise from First Arm.

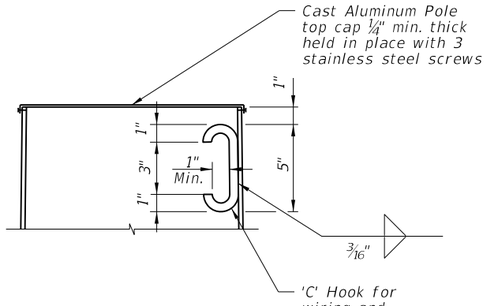

POLE TOP CUT-AWAY

(Option 'b')

POLE TOP DETAILS

NOTE:
Any combination of the above two options may be used, provided both lifting and wiring is accommodated.

NOTES:

1. Luminaire type and Luminaire to Arm Connection Details can be found elsewhere.
2. Align Luminaire Arm with single Mast Arm or first Arm of Double Mast Arm unless indicated otherwise in plans.

TYPICAL LUMINAIRE ARM AND CONNECTION DETAILS

LAST REVISION	REVISION	DESCRIPTION:				
01/01/12			FDOT DESIGN STANDARDS 2013	MAST ARM ASSEMBLIES	INDEX NO. 17745	SHEET NO. 5

C:\d\projects\standards\roadway\17700-s\17745-05.dgn rd960rh 2:20:02 PM 6/28/2012

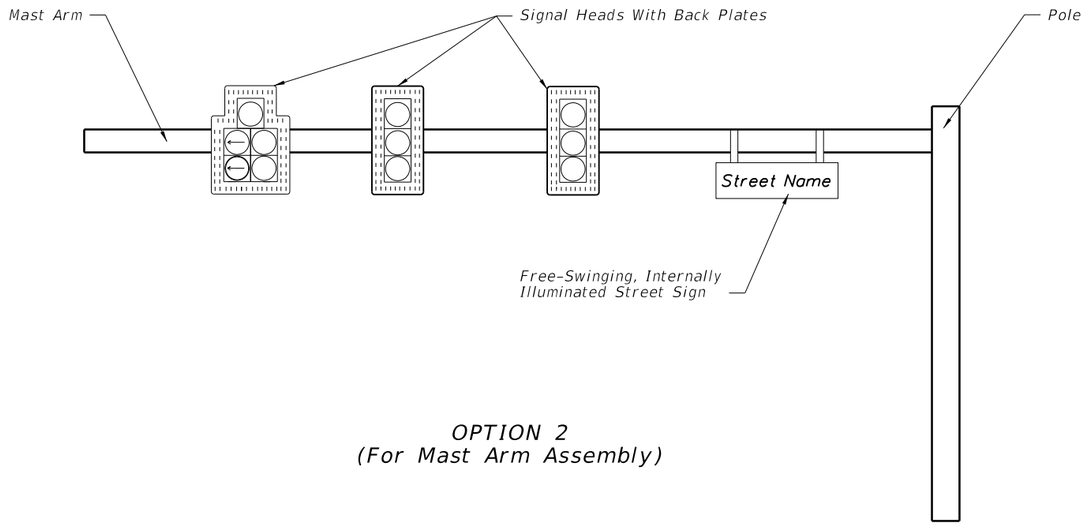

OPTION 2
(For Mast Arm Assembly)

NOTES:

1. Free-swinging, internally-illuminated street signs shall only be installed on the signal pole for span wire assemblies. For mast arm assemblies the street sign may be installed on the arm or pole.
2. Free-swinging, internally-illuminated street signs shall meet the requirements of Section 699 of the Standard Specifications for Road and Bridge Construction.
3. Pole attachments and cantilever arm (or truss) assemblies may be accepted by Contractor certification provided the signs being supported meet the weight and area limitations included in Section 699 for "Acceptance by Certification".
4. Pole attachments and cantilever arm (or truss) assemblies supporting signs not meeting the weight or area limitations included in Section 699 for "Acceptance by Certification" require the submittal of structural calculations and Shop Drawings that have been prepared by and sealed by the Specialty Engineer.

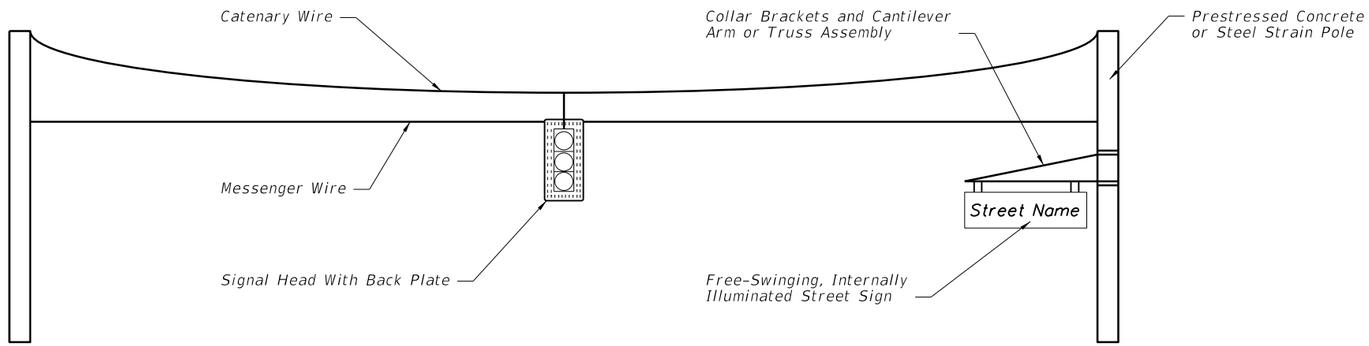

OPTION 1
(For Span Wire Assembly)

C:\d\projects\standards\roadway\17700-s\17748-01.dgn
rd960rh
2:20:04 PM
6/28/2012

LAST REVISION	REVISION	DESCRIPTION:				
07/01/09			FDOT DESIGN STANDARDS 2013	FREE-SWINGING INTERNALLY-ILLUMINATED STREET SIGN ASSEMBLIES	INDEX NO. 17748	SHEET NO. 1

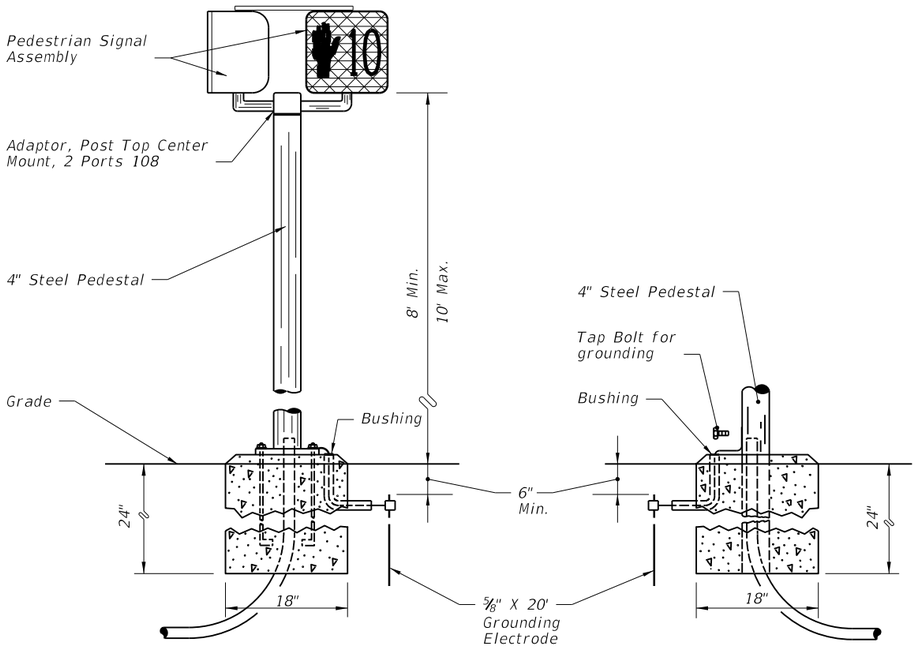

FIGURE A

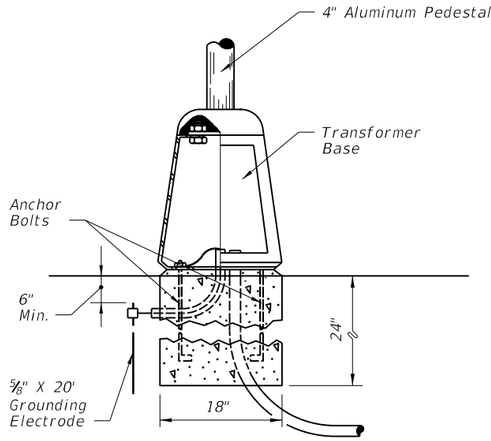

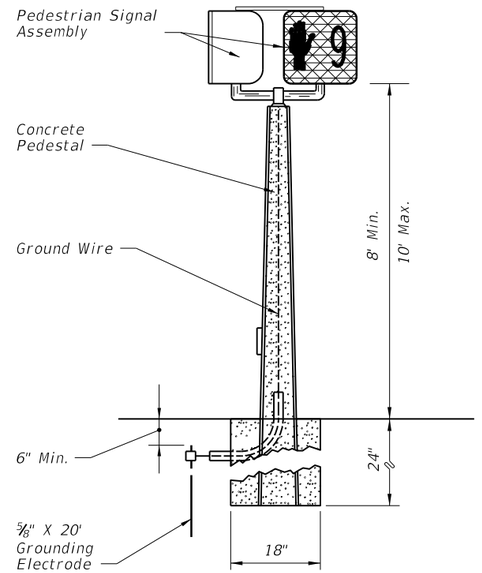

FIGURE B

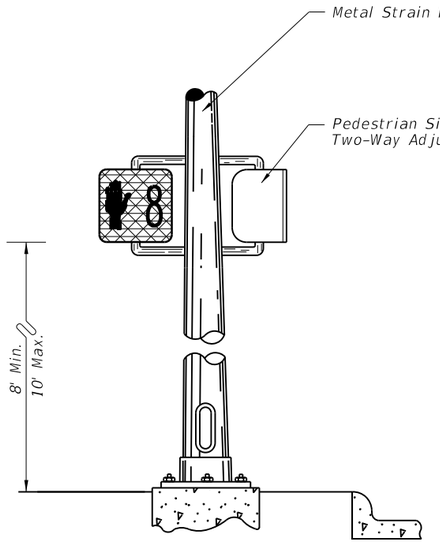

FIGURE C

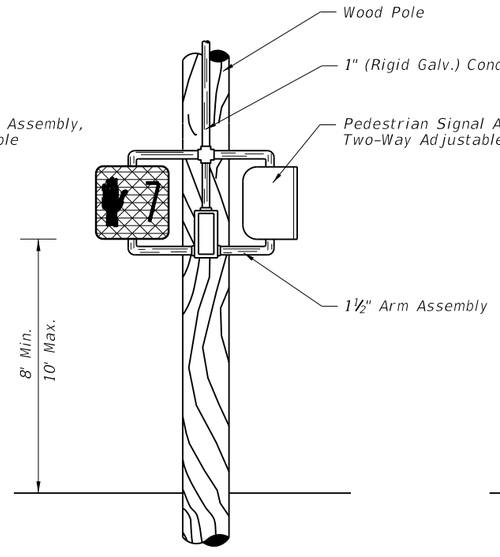

FIGURE D

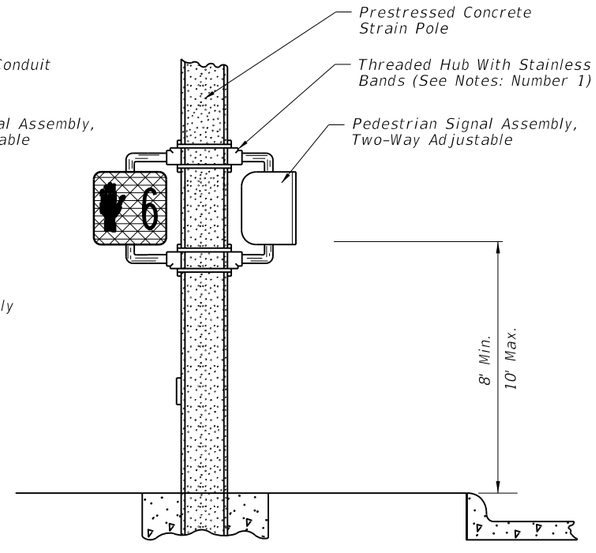

FIGURE E

Notes:

1. As an option, the contractor will be allowed to install pedestrian signals on concrete poles and pedestals with the use of lead anchors (two bolts same size per hub) in lieu of the stranded steel bands.
2. Holes drilled or punched in metal poles or pedestals shall be thoroughly reamed, cleaned of all burrs and covered with two (2) coats of zinc rich paint as specified in the standard specifications for road and bridge, construction. Grommets or bushings shall be installed in holes.
3. Meet all grounding requirements of Section 620 of the Standard Specifications.

6/28/2012 2:20:06 PM rd960rh C:\d\projects\standards\roadway\17700-s\17764-01.dgn

LAST REVISION	REVISION	DESCRIPTION:			INDEX NO.	SHEET NO.
01/01/12			FDOT DESIGN STANDARDS 2013	PEDESTRIAN CONTROL SIGNAL INSTALLATION DETAILS	17764	1

TWISTED PAIR AND LOOP LEAD-IN INSTALLATION WITH CURB & GUTTER

ALTERNATIVE 1

Drill A Hole Through The Curb At The Point Which The Required Saw-Cut Depth Is Obtained Just Prior To Cutting The Top Inside Edge Of The Curb. Slide A Section Of Flexible Conduit At Least 6" Into The Hole From The Back Side Of The Curb But Not Within 2" Of The Top Of The Hole. The Conduit Shall Fit Snug Within The Drilled Hole. Fill The Top Of The Hole With Loop Sealant To The Level Of The Curb Surface. A Nonmetallic Material Should Be Used To Prevent Excessive Loop Sealant From Entering The Flexible Conduit.

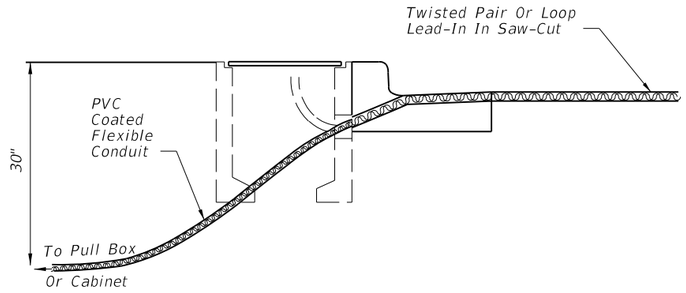

ALTERNATIVE 2

Drill A Hole ½" To 1" Larger In Diameter Than The Rigid Conduit To Be Used Through The Roadway Asphalt (Or Concrete) Surface And Base At An Appropriate Angle To Intercept The Trench Or Pull Box Hole. Place A Predetermined Length Of Rigid Conduit In The Hole And Drive The Conduit Into The Trench Or Hole. Install A Molded Bushing (Nonmetallic) On The Roadway End Of The Rigid, Conduit. The Top Of The Rigid Conduit Shall Be Approximately 2" Below The Roadway Surface. Fill The Hole With Loop Sealant To The Level Of The Roadway Surface. A Nonmetallic Material Should Be Used To Prevent Excessive Loop Sealant From Entering The Rigid Conduit.

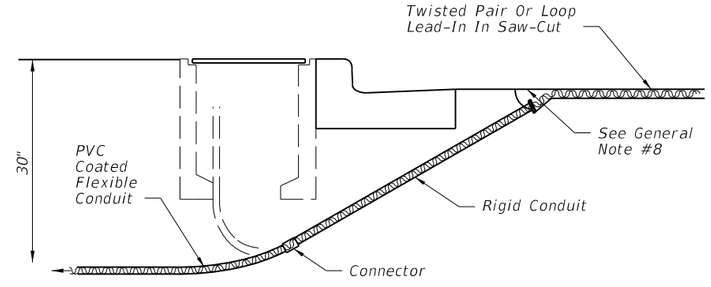

NOTE:
Other alternatives may be approved by the State Traffic Operations Engineer.

TWISTED PAIR AND LOOP LEAD-IN INSTALLATION WITHOUT CURB & GUTTER

Cut A Slot In The Edge Of The Roadway Of Sufficient Size And Depth To Snugly Place The End Of The Flexible conduit. The End Of The Conduit Shall Be At Least 6" Into The Roadway And approximately 2" Below The Top Of The Roadway Surface. The Departure Angle Of The Conduit From The Roadway Shall Be 30° To 45°.

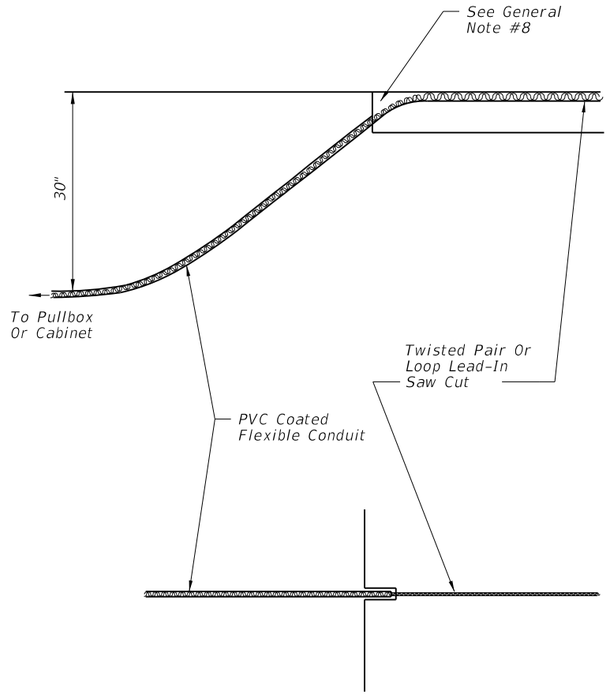

NOTE:
Other alternatives may be approved by the State Traffic Operations Engineer.

GENERAL NOTES

1. If the loop lead-in is 75' or less from the edge of the loop detector to controller cabinet, continue the twisted pair to the cabinet. If the loop lead-in is greater than 75' continue the twisted pair to the specified pullbox, splice to shielded lead-in wire and continue to the controller cabinet.
2. The width of all saw cuts shall be sufficient to allow unforced placement of loop wires or lead-in cables into the saw cut. The depth of all saw cuts, except across expansion joints, shall be 3" standard with a maximum of 4".
3. On resurfacing or new roadway construction projects, the loop wires and lead-in cables may be installed in the asphalt structural course prior to the placement of the final asphalt wearing course. The loop wires and lead-in cables shall be placed in a saw cut in the structural course. The depth of the cables below the top of the final surface shall comply with note 2.
4. A nonmetallic hold down material shall be used to secure loop wires and lead-ins to the bottom of saw-cuts. Hold down material shall be placed at approximately 12" intervals around loops and 24" intervals on lead-ins.
5. The minimum distance between the twisted pairs of loop lead-in wire is 6" from the loop to 12" from the pavement edge or curb.
6. Splice Connections in pull boxes with UL listed, watertight, insulated enclosures. Place one enclosure over the end of each conductor and place a third enclosure over the exposed end of the shielded cable.
7. As an alternate, a larger diameter enclosure that will accommodate both the splices of the conductors and the exposed end of the shielded cable may be used.
8. The maximum area of asphalt to be disturbed shall be 6"x 6". This area shall be restored as directed by the Engineer.

C:\d\projects\standards\roadway\17700-s\17781-01.dgn rd960rh 2:20:08 PM 6/28/2012

LAST REVISION	REVISION	DESCRIPTION:				
07/01/02			FDOT DESIGN STANDARDS 2013	VEHICLE LOOP INSTALLATION DETAILS	INDEX NO. 17781	SHEET NO. 1

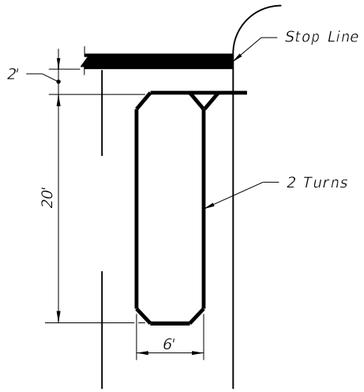

TYPE A

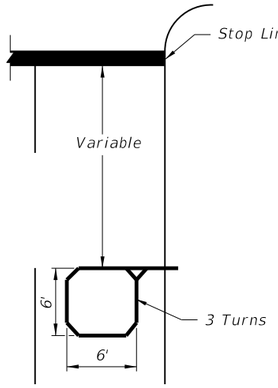

TYPE B

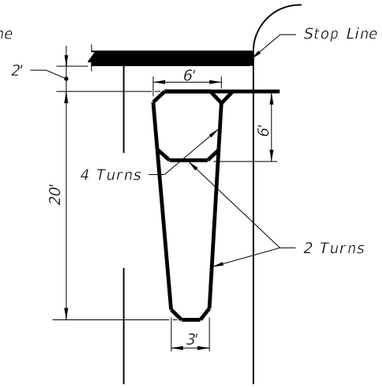

TYPE C

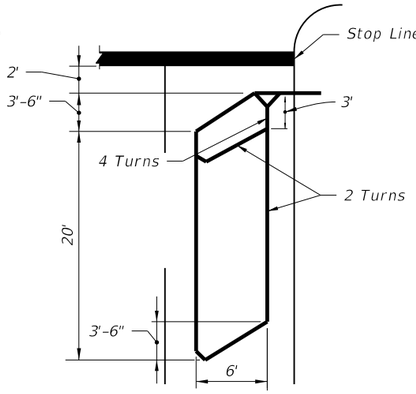

TYPE D

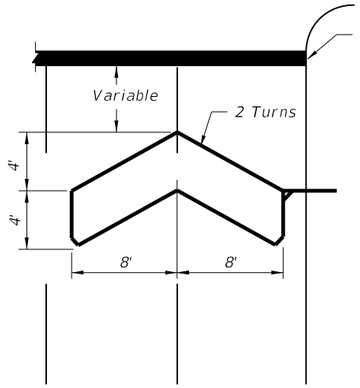

TYPE E

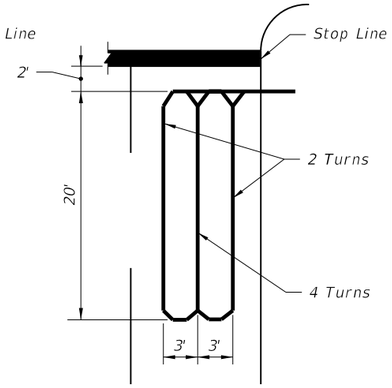

TYPE F

Note:
Loop conductors must follow saw-cut to bottom forming slack section at joint.

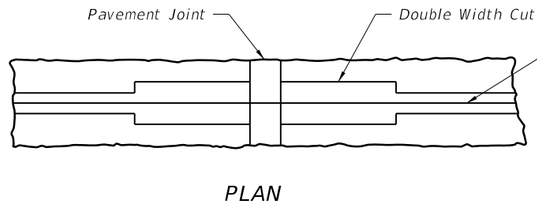

PLAN

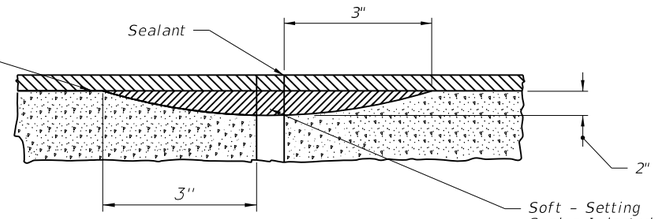

VERTICAL SECTION

CONCRETE PAVEMENT EXPANSION JOINTS

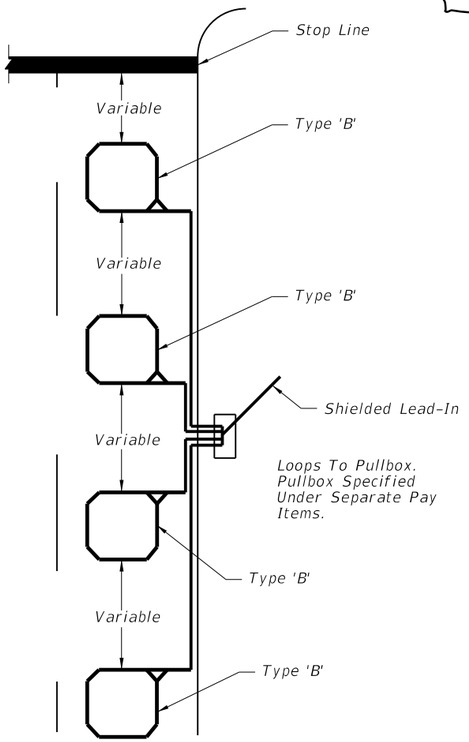

TYPE G

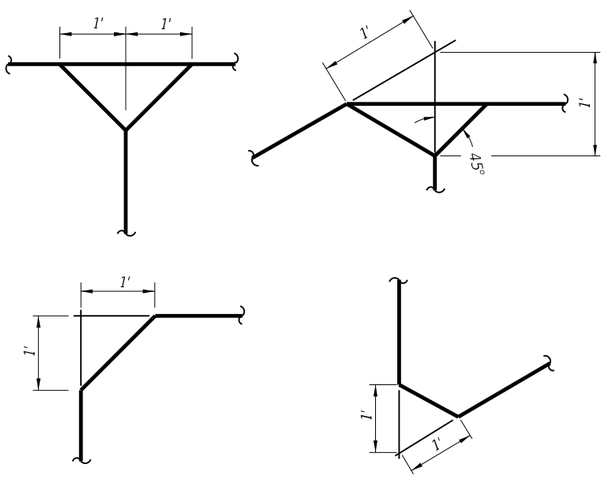

LOOP CORNER AND LEAD-IN DETAILS

Notes:

1. The "number of turns" indicated at the specified point on the loop refers to the number of passes of loop wires which are placed in the saw-cut forming the complete loop.
2. Loop types or details not drawn to scale.
3. Loop Types are centered in a single lane except Type E which is centered on two lanes.
4. The number of individual loops in the Type G loop may vary up to a maximum of four (4).
5. Lead-in may be connected to either end of loop.
6. The leading edge of loop Types A,C,D,& F may extend past the stop line a maximum of 10'. The length of these loops may be extended to a maximum of 60'. Each intersection should be individually designed and if the modifications noted above is required it must be noted or detailed in tne plans.
7. Loop lead-in wires should not be installed in the same pull box with signal power cable.

C:\d\projects\standards\roadway\17700-s\17781-02.dgn
rd960rh
2:20:10 PM
6/28/2012

LAST REVISION	REVISION	DESCRIPTION:			INDEX NO.	SHEET NO.
07/01/00			FDOT DESIGN STANDARDS 2013	VEHICLE LOOP INSTALLATION DETAILS	17781	2

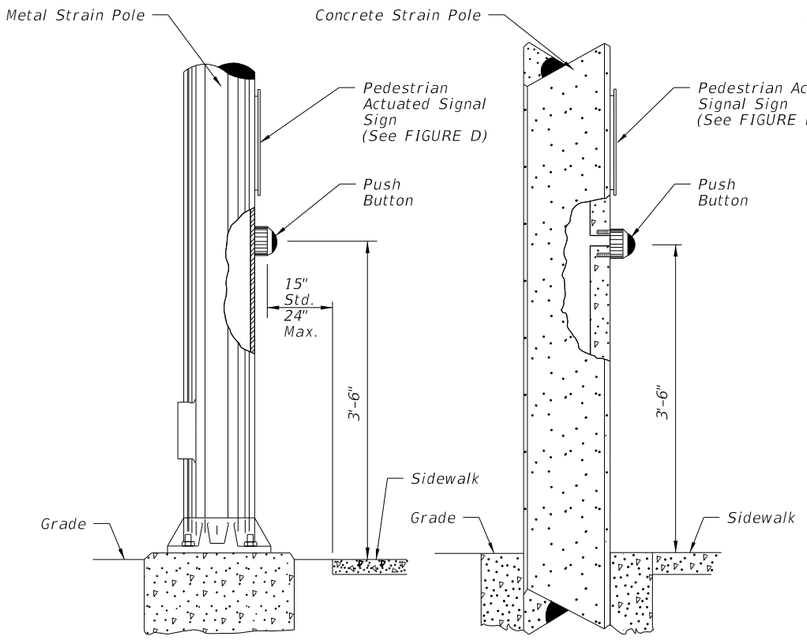

FIGURE A
POLE MOUNTED
DETECTOR STATION

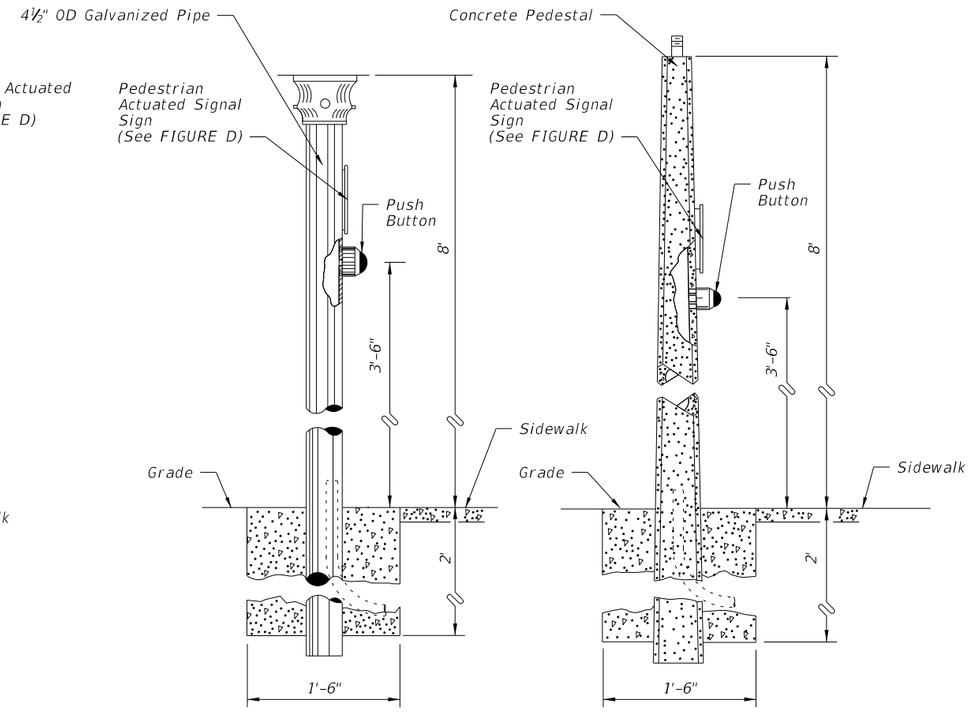

FIGURE B
PEDESTAL STATION
DETECTOR STATION

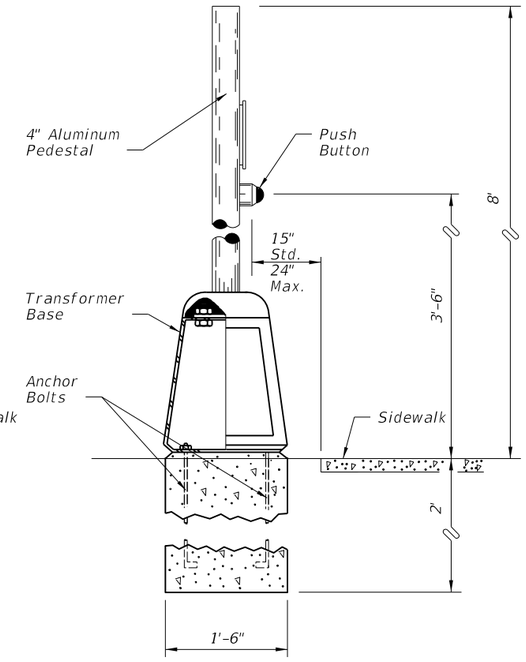

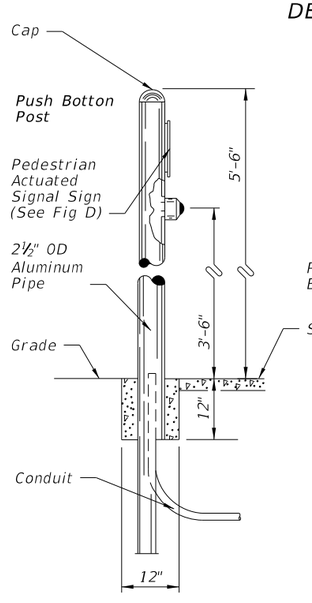

FIGURE C
POST DETECTOR STATION
DETECTOR STATION

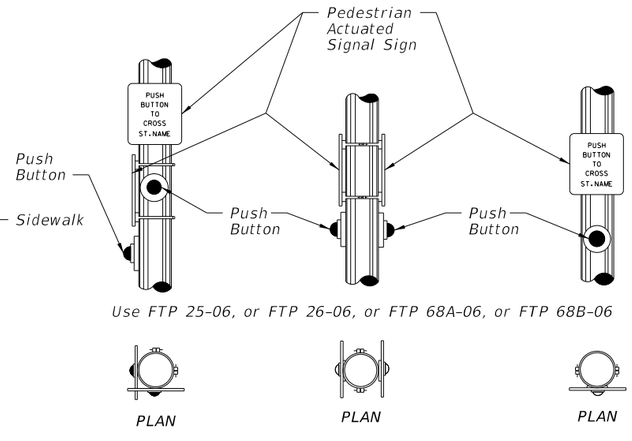

FIGURE D

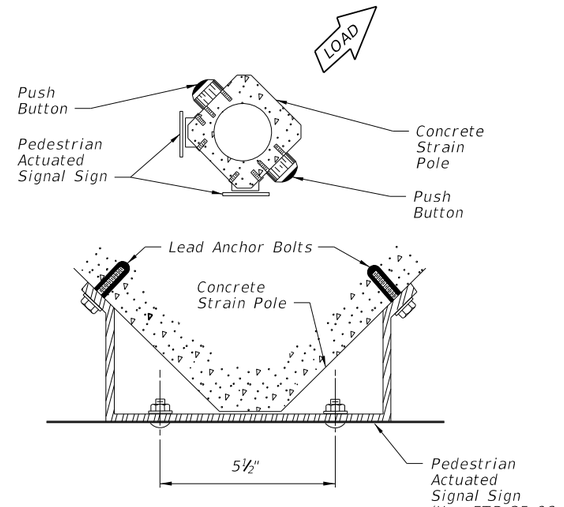

FIGURE E

Notes:

1. *Payment for sign is included in the price for the pedestrian detector.*
2. *Signs shall be mounted above detectors, explaining their purpose and use.*
3. *The positioning of pedestrian push button should clearly indicate which crosswalk signal is actuated by each push button.*
4. *Push buttons and signs are to be mounted in accordance with Standard Specifications, section 665.*
5. *Meet all grounding requirements of Section 620 of the Standard Specifications.*
6. *A 30"X48" landing is required centered on each push button.*

Note To Designers:

The designer should ensure the distance to the Push Button in FIGURE A & B is maintained. This distance can vary depending on post or pedestal type or whether a frangible base is used and sidewalk configuration. This is specified to meet Americans with Disabilities Act.

C:\d\projects\standards\roadway\17700-s\17784-01.dgn
rd960rh
2:20:13 PM
6/28/2012

LAST REVISION	REVISION	DESCRIPTION:				
01/01/12			FDOT DESIGN STANDARDS 2013	PEDESTRIAN DETECTOR ASSEMBLY INSTALLATION DETAILS	INDEX NO. 17784	SHEET NO. 1

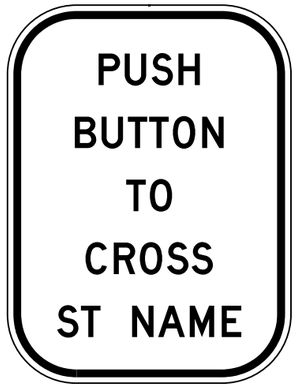

FTP-25-06

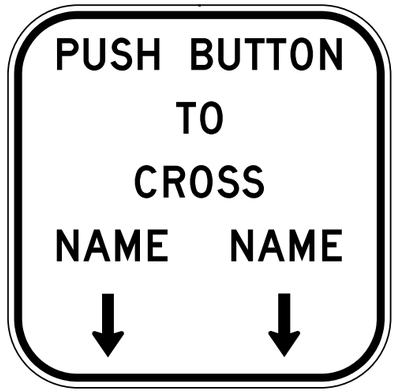

FTP-26-06

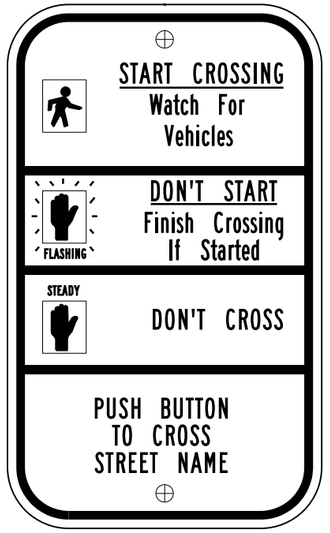

FTP-68A-06

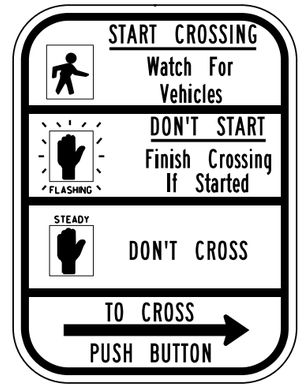

R10-3b
(Use Only for Case I)

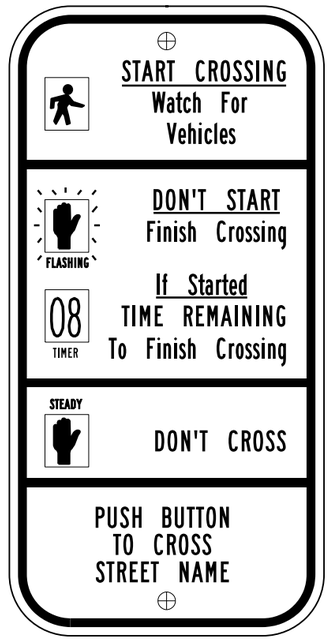

FTP-68B-06

R10-3e
(Use Only for Case I)

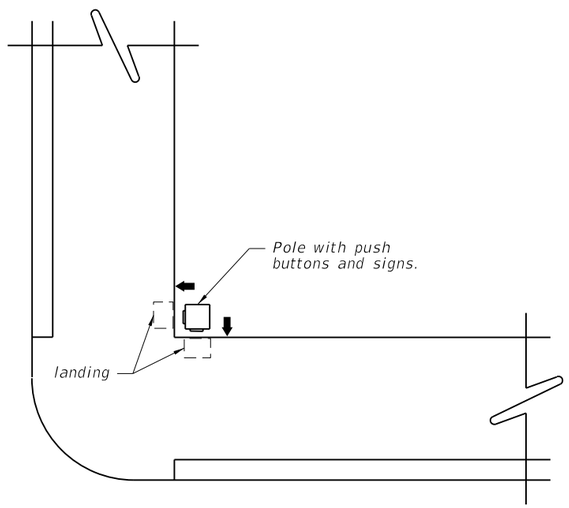

CASE I
POLE PARALLEL TO CURBLINE
ALTERNATE TO FIGURE E

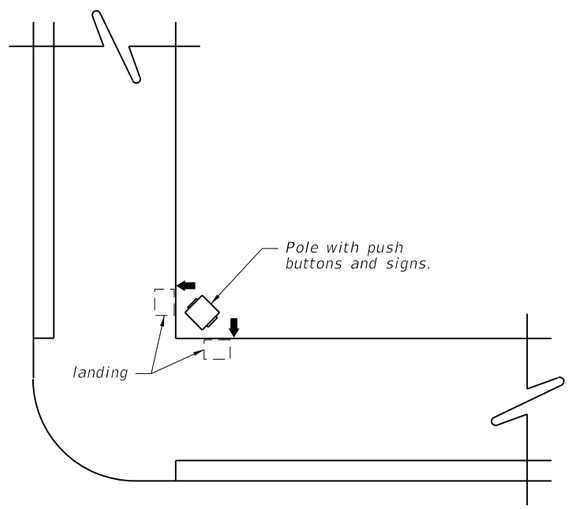

CASE II
POLE DIAGONAL TO CURBLINE
ALTERNATE TO FIGURE E

NOTE:
1. Refer to the MANUAL ON UNIFORM TRAFFIC CONTROL DEVICES figure 2B-26 Pedestrian Signs, The STANDARD HIGHWAY SIGNS MANUAL (English) Sign R10-3b for Text Size, Spacing and Symbol size. Also see DESIGN STANDARDS Index 17355 for details of FTP signs.

C:\d\projects\standards\roadway\17700-s\17784-02.dgn
rd960rh
2:20:15 PM
6/28/2012

LAST REVISION	REVISION	DESCRIPTION:				
07/01/12			FDOT DESIGN STANDARDS 2013	PEDESTRIAN DETECTOR ASSEMBLY INSTALLATION DETAILS	INDEX NO. 17784	SHEET NO. 2

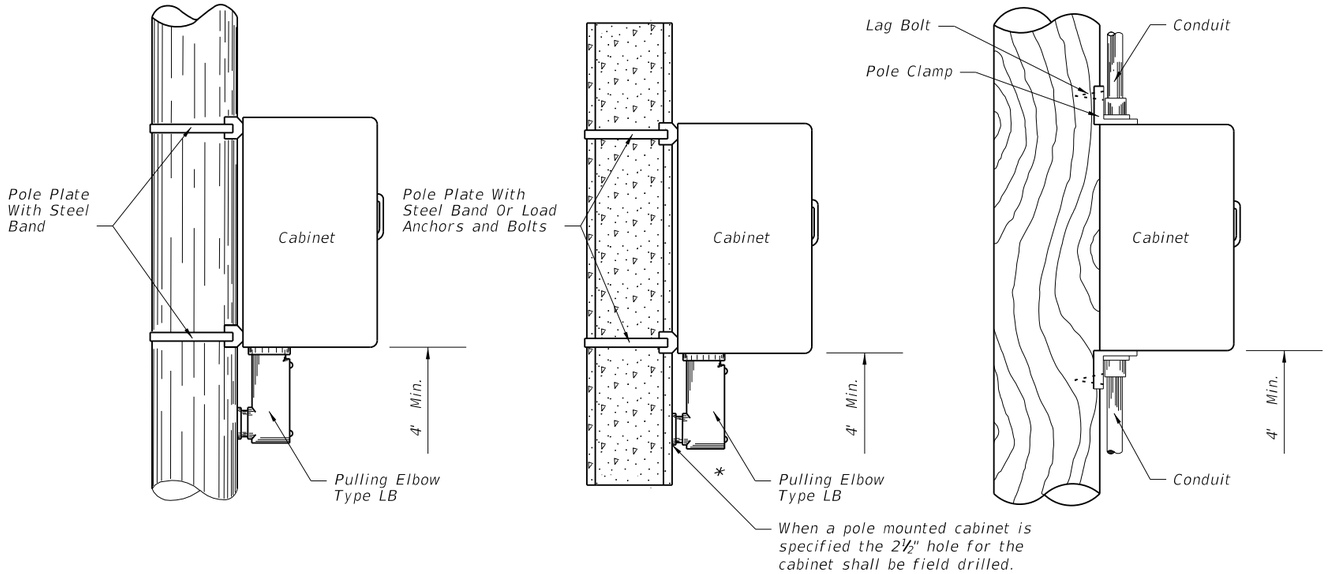

METAL POLE CONCRETE POLE WOOD POLE

POLE MOUNTED CABINET

Liquidtight flexible conduit is approved for use from the electrical disconnect to the cabinet when both are installed on the same pole.

* *If holes for cabinet mounting require relocation, original holes shall be filled in with concrete or covered with a noncorrosive cover plate.*

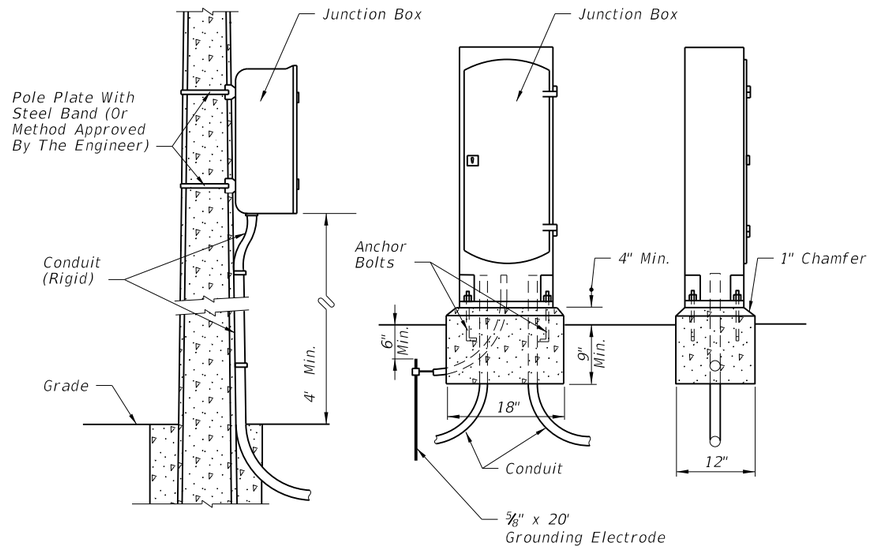

POLE MOUNTED BASE MOUNTED

INTERCONNECT JUNCTION BOX

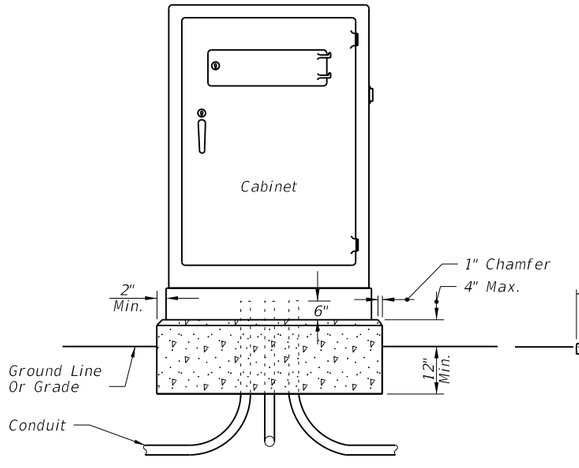

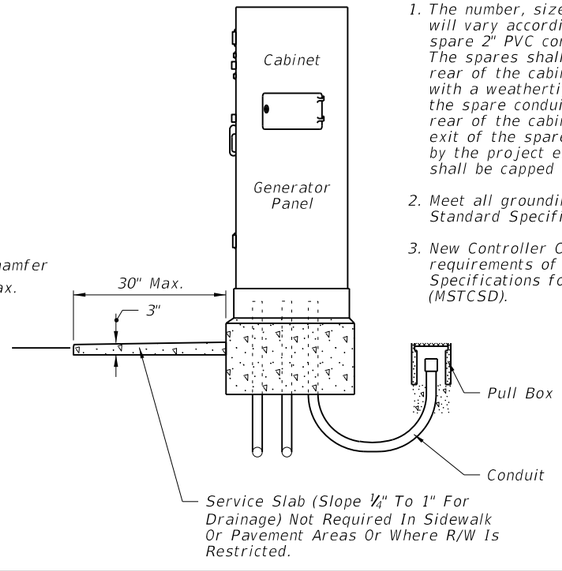

Notes:

1. *The number, size and orientation of conduit sweep will vary according to site condition or locations. Two spare 2" PVC conduits shall be provided in all bases. The spares shall exit in the direction of the center rear of the cabinet base, into a pullbox and capped with a weathertight fitting. If obstructions prevent the spare conduit from exiting to the rear, or the rear of the cabinet is located on the R/W line, a side exit of the spare conduits will have to be approved by the project engineer. All spare conduit sweeps shall be capped with a weatherproof fitting.*
2. *Meet all grounding rquirements of Section 620 of the Standard Specifications.*
3. *New Controller Cabinet installation shall meet the requirements of Section A676-1 of the Minimum Specifications for Traffic Control Signal Devices (MSTCSD).*

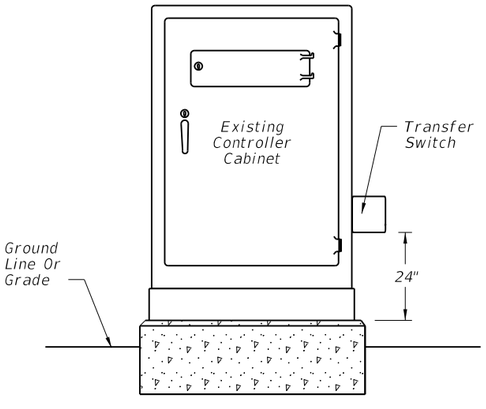

Existing controller cabinets to be retrofitted shall meet the requirements of Section A678-16 of the Minimum Specifications for Traffic Control Signal Devices (MSTCSD).

The signalized intersection controller cabinet retrofit installation procedures are located at: http://www.dot.state.fl.us/TrafficOperations/Document Library Generator Power for Signalized Intersection

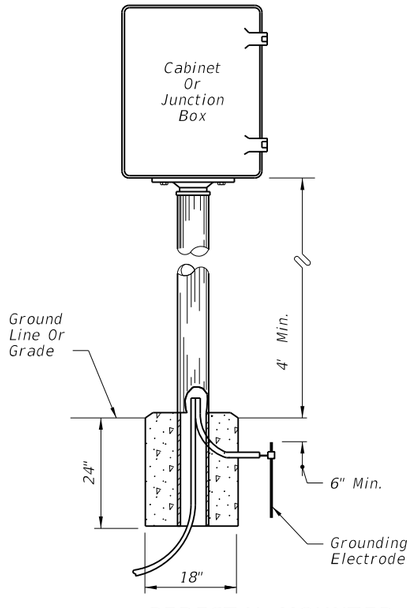

PEDESTAL MOUNTED

LAST REVISION	REVISION	DESCRIPTION:		FDOT DESIGN STANDARDS 2013	CABINET INSTALLATION DETAILS	INDEX NO.	SHEET NO.
07/01/07						17841	1

C:\d\projects\standards\roadway\17800-s\17841-01.dgn rd960rh 2:20:17 PM 6/28/2012

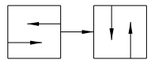

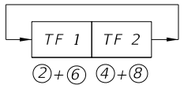

SOP 1

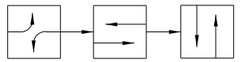

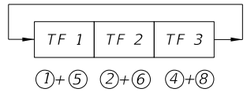

SOP 2

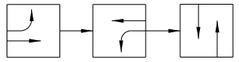

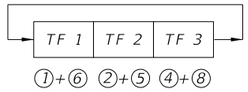

SOP 3

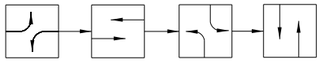

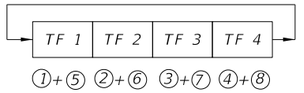

SOP 4

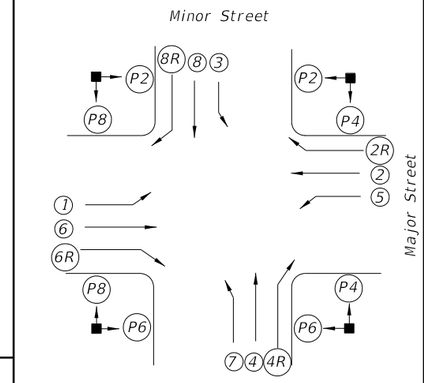

SIGNALIZED INTERSECTION

Vehicle movements & signal head number assignments are not directionally oriented but shall maintain their relative orientation about the intersection (I.E., movements 7 and 4 are always to the right of movements 1 and 6 etc.).

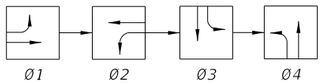

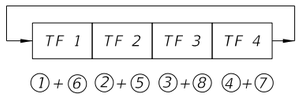

SOP 5

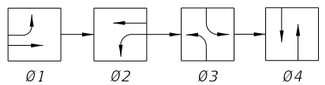

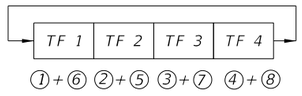

SOP 6

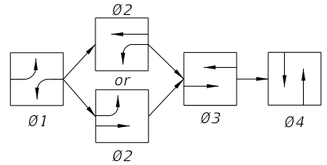

SOP 7

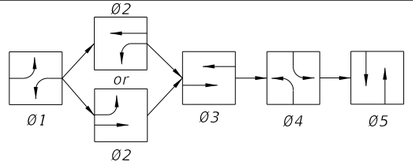

SOP 8

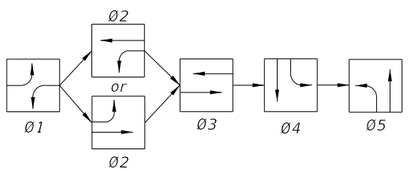

SOP 9

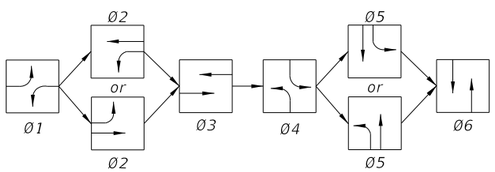

SOP 10

LEGEND

- (X) Vehicle Movement Number
- (PX) Pedestrian Movement Number
- TF X Timing Function Number
- ØX Phase Number
- Green Arrow (Left or Right)
- Red Arrow
- Yellow Arrow

SIGNAL CLEARANCE TABLE

(Blank Indicates No Clearance Required)

SIGNAL INDICATIONS: From \ To	R		G				WALK	DONT WALK
R			Y		Y	Y		
			Y		Y	Y		
G								
WALK								
DONT WALK							Flash DONT WALK	

LAST REVISION	REVISION	DESCRIPTION:				
07/01/05			FDOT DESIGN STANDARDS 2013	STANDARD SIGNAL OPERATING PLANS	INDEX NO. 17870	SHEET NO. 1

6/28/2012 2:20:19 PM rd960rh C:\d\projects\standards\roadway\17800-s\17870-01.dgn

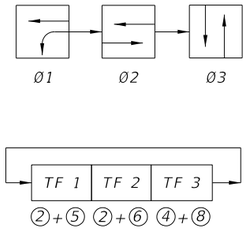

SOP 11

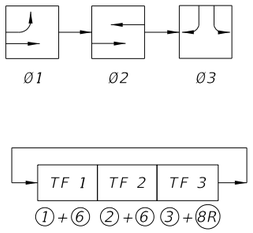

SOP 12

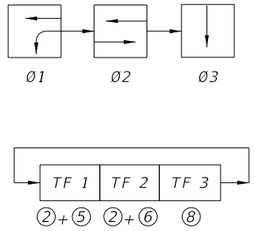

SOP 13

(ONE- WAY STREET INTERSECTION)

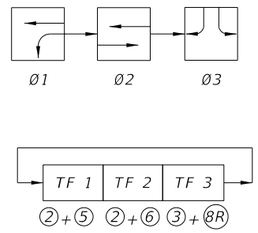

SOP 14

(DIAMOND INTERCHANGE OPERATION)

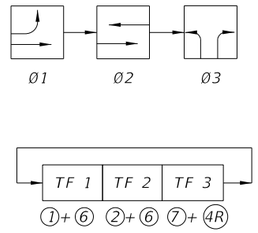

SOP 15

(DIAMOND INTERCHANGE OPERATION)

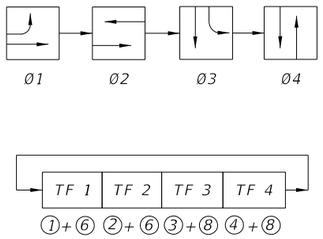

SOP 16

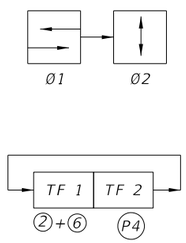

SOP 17

(MIDBLOCK)

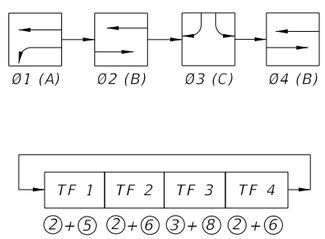

NOTE:
Only Ø2 Or Ø4 Used, Not Both To Obtain ABC, Or ACB Operation.

SOP 18

(DIAMOND INTERCHANGE OPERATIONS)

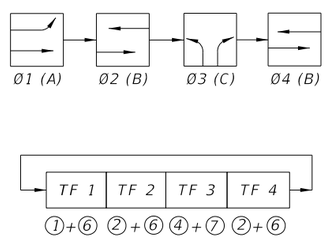

NOTE:
Only Ø2 Or Ø4 Used, Not Both To Obtain ABC, Or ACB Operation.

SOP 19

(DIAMOND INTERCHANGE OPERATIONS)

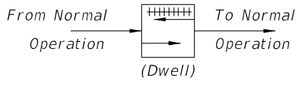

POP 1

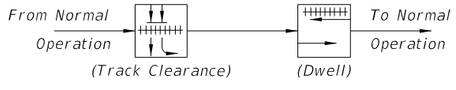

POP 2

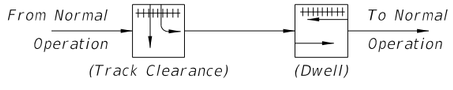

POP 3

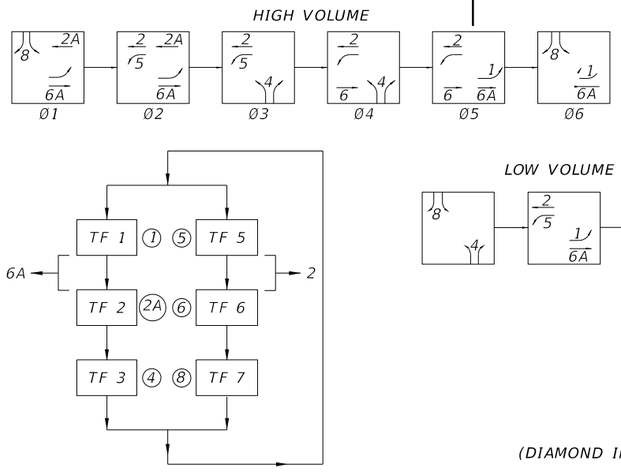

SOP 20

(DIAMOND INTERCHANGE OPERATIONS)

LAST REVISION	REVISION	DESCRIPTION:				
07/01/00			FDOT DESIGN STANDARDS 2013	STANDARD SIGNAL OPERATING PLANS	INDEX NO. 17870	SHEET NO. 2

6/28/2012 2:20:21 PM rd960rh C:\d\projects\standards\roadway\17800-s\17870-02.dgn

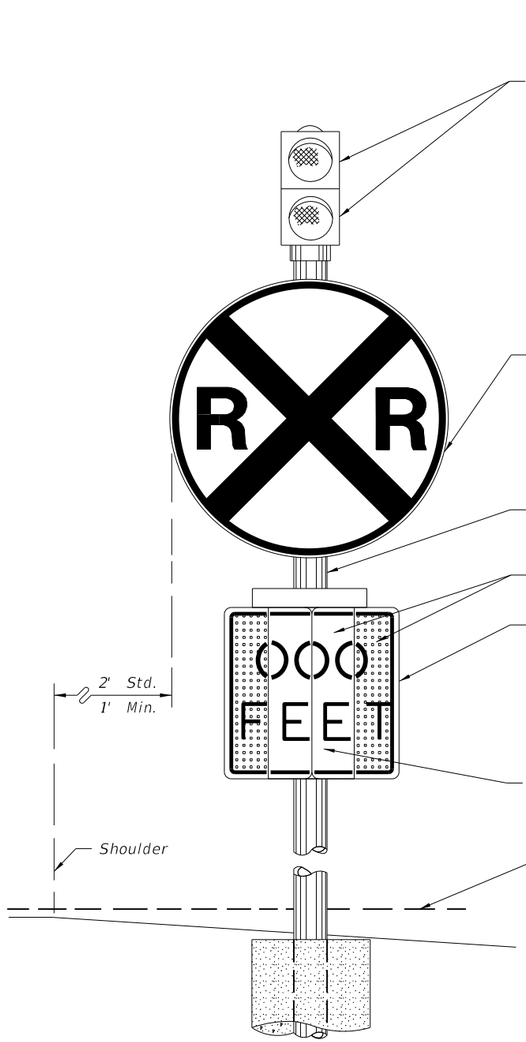

FRONT VIEW

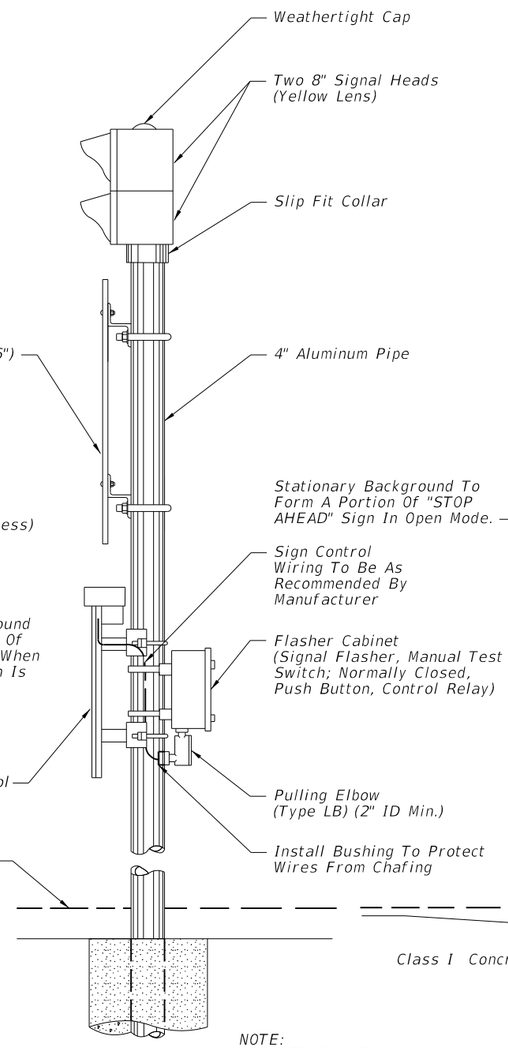

SIDE VIEW

NOTE:
1. "STOP AHEAD" is standard and preferred sign message.

Another message may be approved when appropriate for specific situations.

PASSIVE STATE
(TRAIN CIRCUIT NOT ACTUATED)

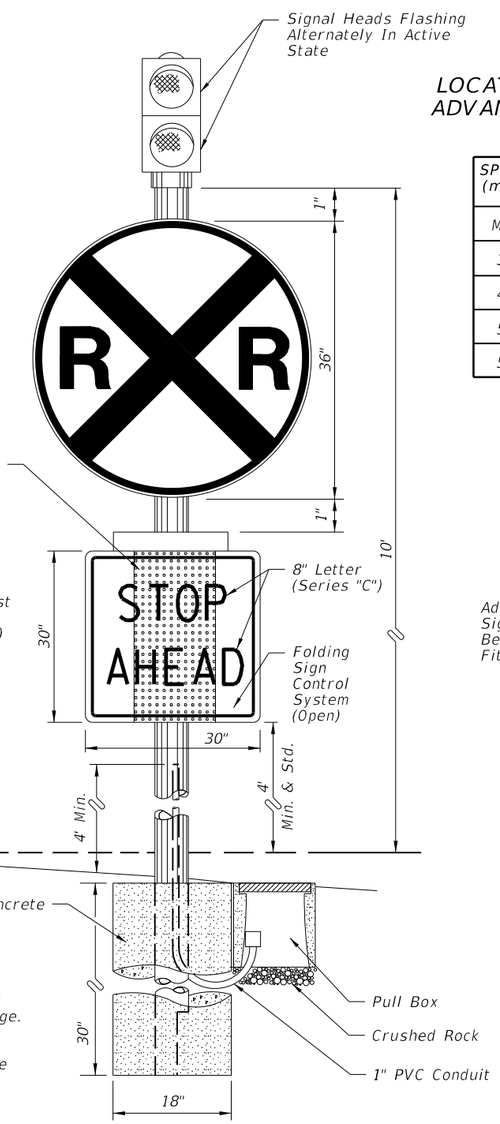

FRONT VIEW

ACTIVE STATE
(TRAIN CIRCUIT ACTUATED)

The Distance Is Measured Along Right Edge Of Pavement From RR Stop Bar To Sign Advance Warning Sign.

LOCATION OF THE ADVANCE WARNING SIGN

SPEED (mph)	DISTANCE (ft)
Min.	50
30	75
40	125
50	250
55	325

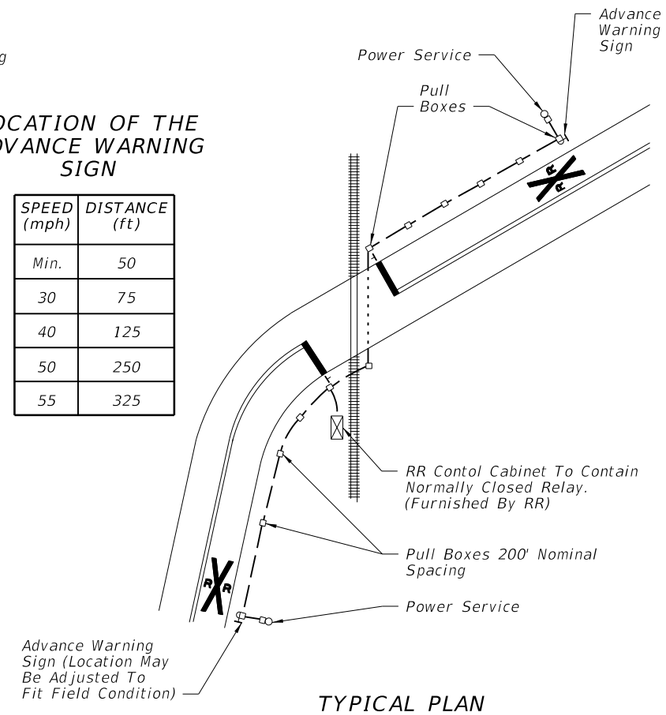

TYPICAL PLAN

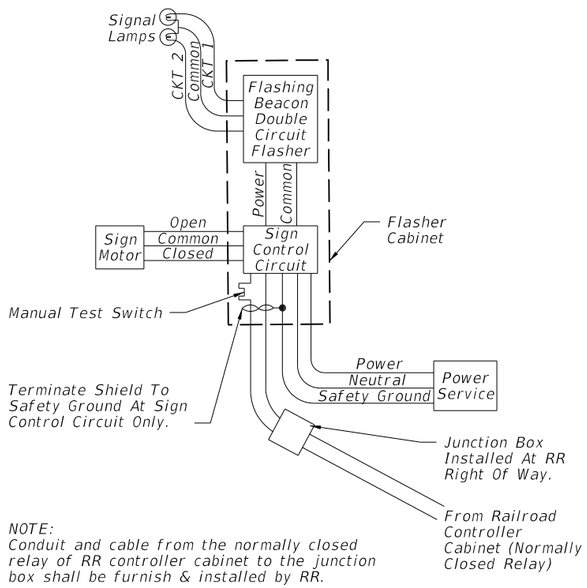

NOTE:
Conduit and cable from the normally closed relay of RR controller cabinet to the junction box shall be furnish & installed by RR.

FUNCTIONAL BLOCK DIAGRAM

LAST REVISION	REVISION	DESCRIPTION:			INDEX NO.	SHEET NO.
07/01/05			FDOT DESIGN STANDARDS 2013	ADVANCE WARNING FOR R/R CROSSING	17881	1

C:\d\projects\standards\roadway\17800-s\17881-01.dgn rd960rh 2:20:23 PM 6/28/2012

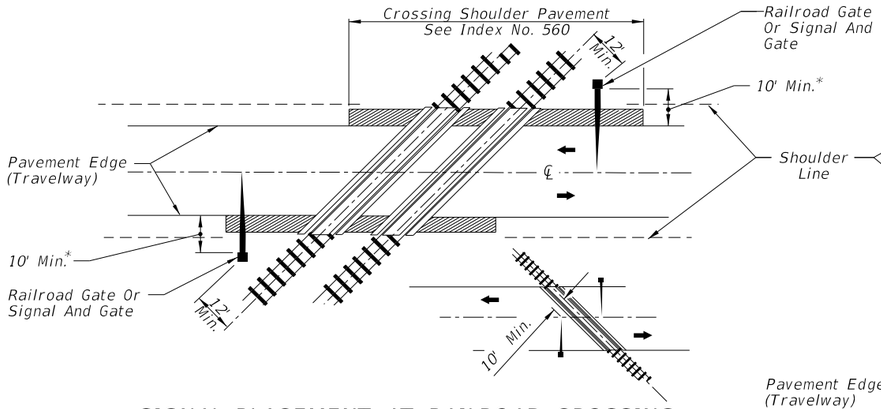

SIGNAL PLACEMENT AT RAILROAD CROSSING
(2 - LANE DESIGN)

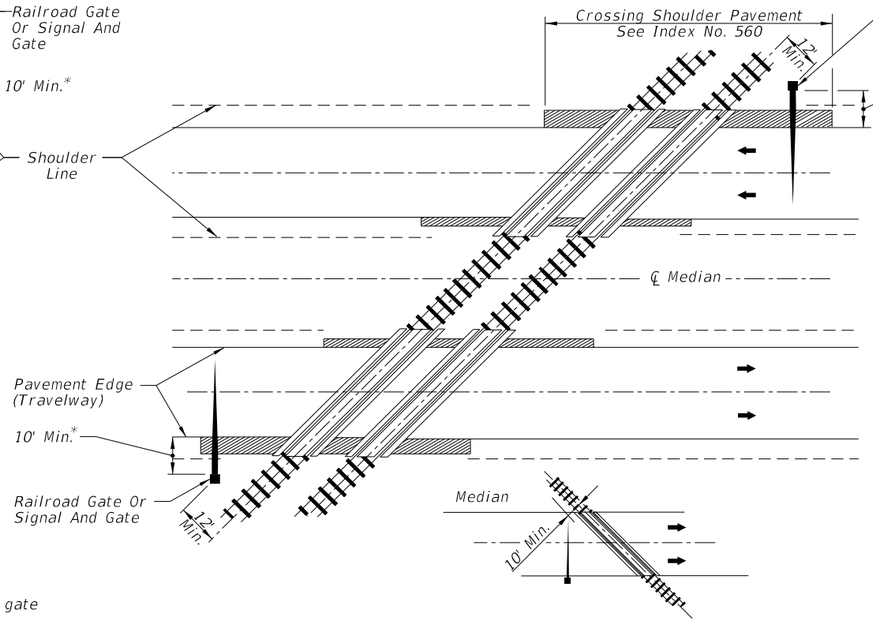

SIGNAL PLACEMENT AT RAILROAD CROSSING
(4 - LANE DESIGN)

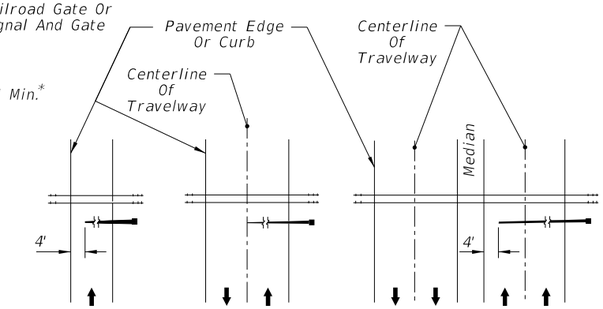

Note:
Arrows denote direction of travel not pavement markings.

FIGURE 1

Gate Length Requirements
See Note 5 Sheet 3

General Notes

1. No guardrail is proposed for signals; however, some form of impact attenuation device may be specified for certain locations.
2. Advance flasher to be installed when and if called for in plans or specifications.
3. Top of foundation shall be no higher than 4" above finished shoulder grade.
4. Type of traffic control device
   - I Flashing signals
   - II Flashing signals with cantilever
   - III Flashing signals with gate
   - IV Flashing signals with cantilever and gate
   - V Gate
5. Class of traffic control devices
   - I Flashing signals–one track
   - II Flashing signals–multiple tracks
   - III Flashing signals and gates–one track
   - IV Flashing signals and gates–multiple tracks

Note:
Two separate foundations may be required (one for signals, one for gate), depending on type of equipment used.

* When 10' is deemed impracticle the control device can be located as close as 2' from the edge of a paved shoulder but not less than 6' from the edge of the near traffic lane.

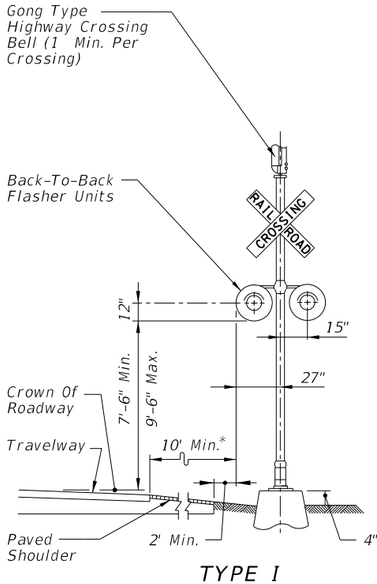

TYPE I

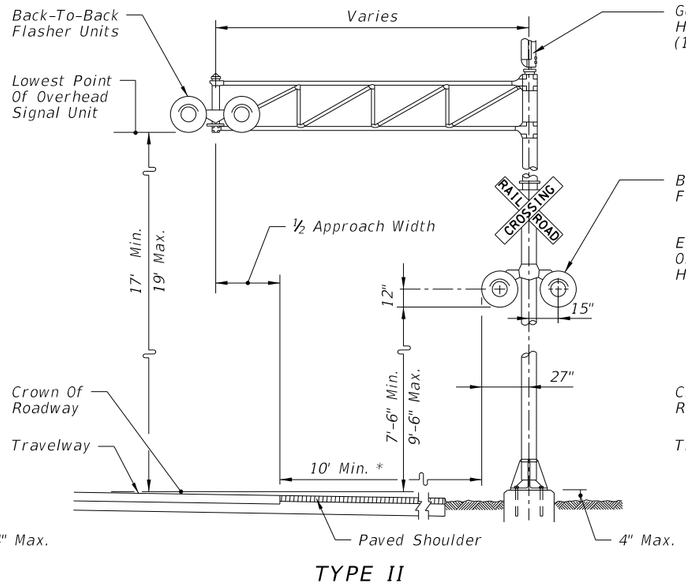

TYPE II

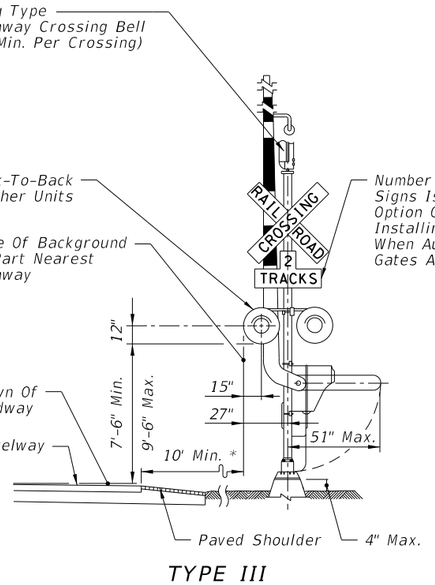

TYPE III

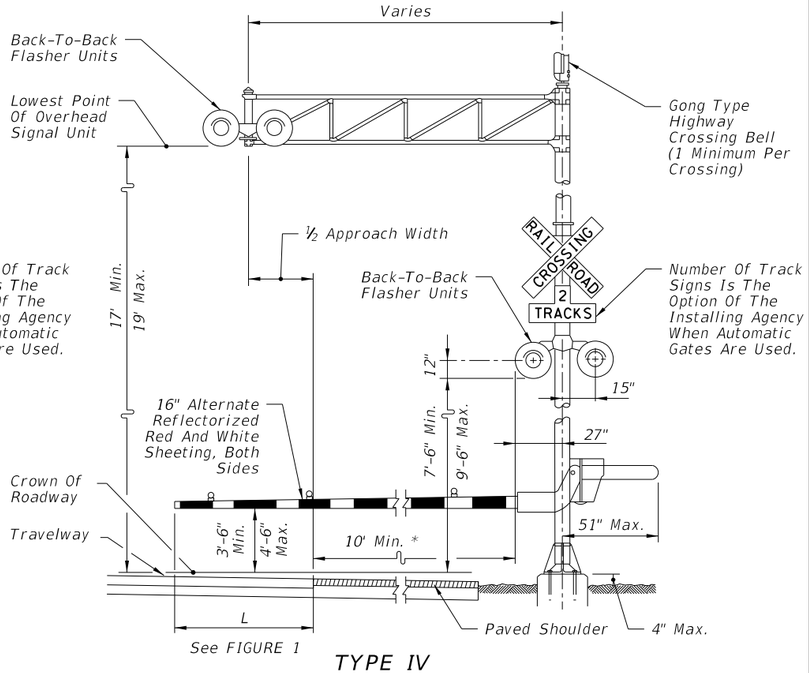

TYPE IV

LAST REVISION	REVISION	DESCRIPTION:		FDOT DESIGN STANDARDS 2013	RAILROAD GRADE CROSSING TRAFFIC CONTROL DEVICES	INDEX NO.	SHEET NO.
01/01/11						17882	1

C:\d\projects\standards\roadway\17800-s\17882-01.dgn rd960rh 2:20:25 PM 6/28/2012

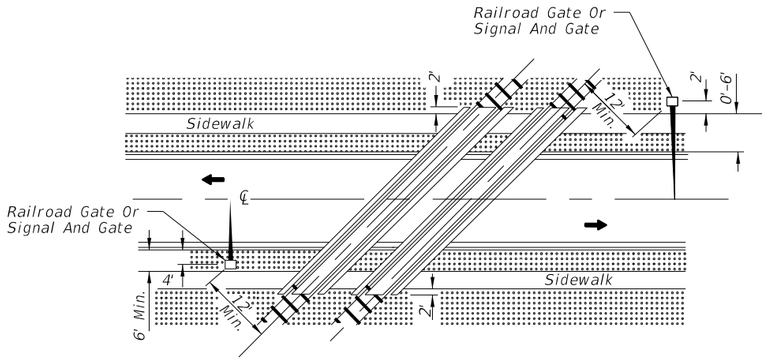

ACUTE ANGLE (AND RIGHT ANGLE)

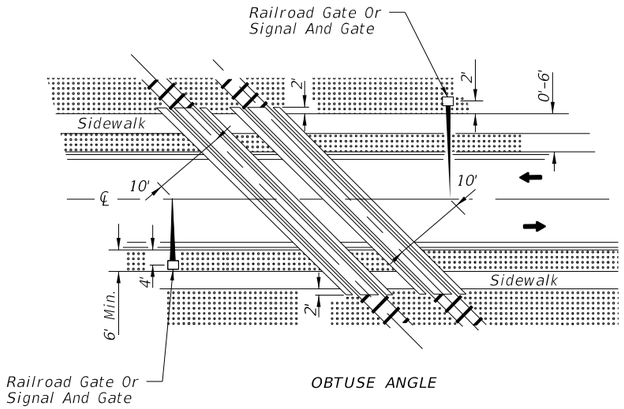

OBTUSE ANGLE

SIGNAL PLACEMENT AT RAILROAD CROSSING (2 LANES, CURB & GUTTER)

SIGNAL PLACEMENT AT RAILROAD CROSSING (2 LANES, CURB & GUTTER)

GENERAL NOTES

1. The location of flashing signals and stop lines shall be established based on future (or present) installation of gate with appropriate track clearances.
2. Where plans call for railroad traffic control devices to be installed in curbed medians, the minimum median width shall be 12'-6".
3. Location of railroad traffic control device is based on the distance available between face of curb & sidewalk. 0' to 6' – Locate device outside sidewalk. Over 6' – Locate device between face of curb and sidewalk.
4. Stop line to be perpendicular to edge of roadway, approx. 15' from nearest rail; or 8' from and parallel to gate when present.
5. When a cantilevered-arm flashing-light signal is used, the minimum vertical clearance shall be 17' from above the Crown of Roadway to the Lowest Point of the Overhead Signal Unit.

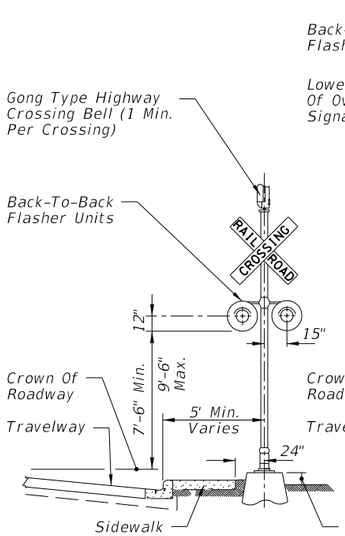

TYPE I

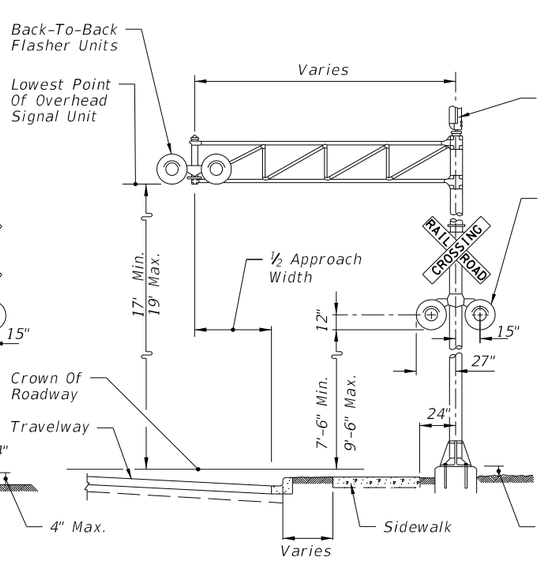

TYPE II

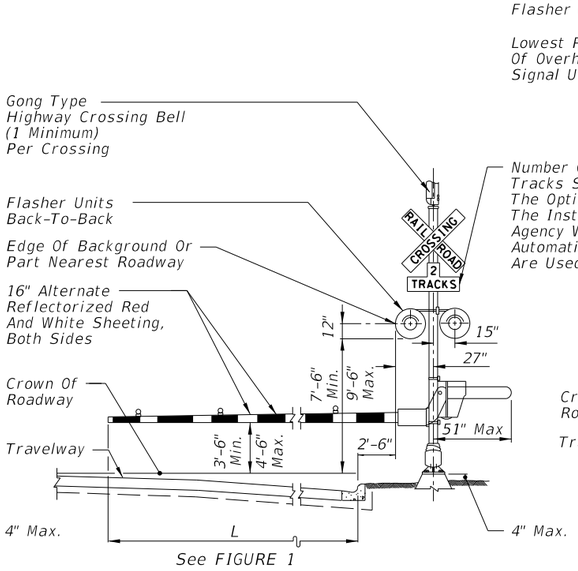

See FIGURE 1

TYPE III

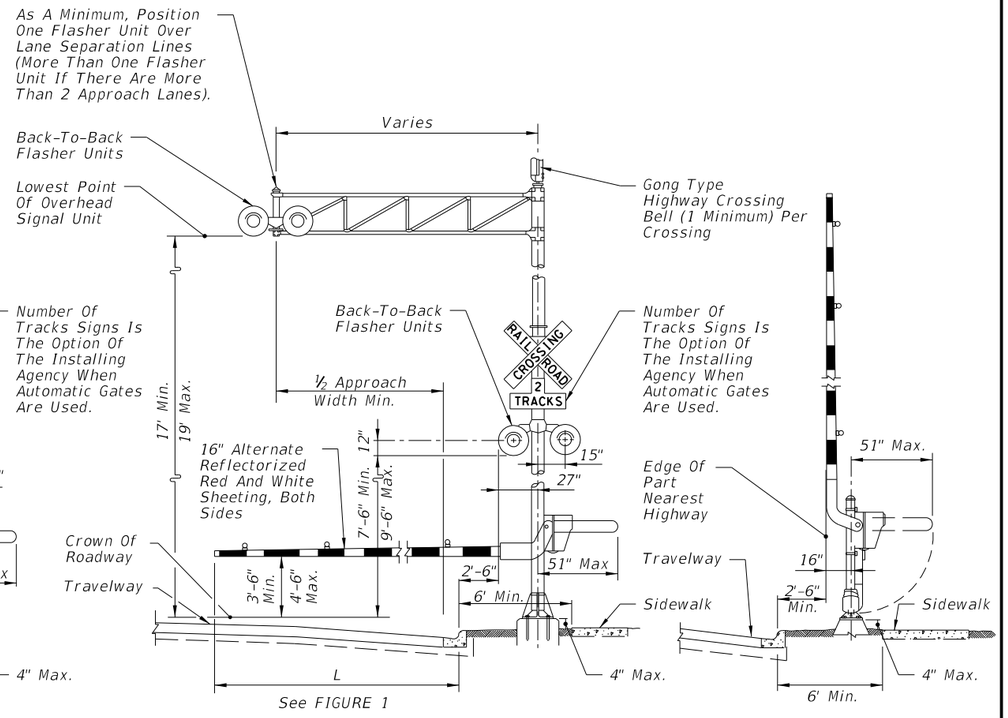

See FIGURE 1

TYPE IV

TYPE V

6/28/2012 2:20:27 PM rd960rh C:\d\projects\standards\roadway\17800-s\17882-02.dgn

LAST REVISION	REVISION	DESCRIPTION:			INDEX NO.	SHEET NO.
01/01/11			FDOT DESIGN STANDARDS 2013	RAILROAD GRADE CROSSING TRAFFIC CONTROL DEVICES	17882	2

RAILROAD CROSSING AT TWO (2)-LANE ROADWAY

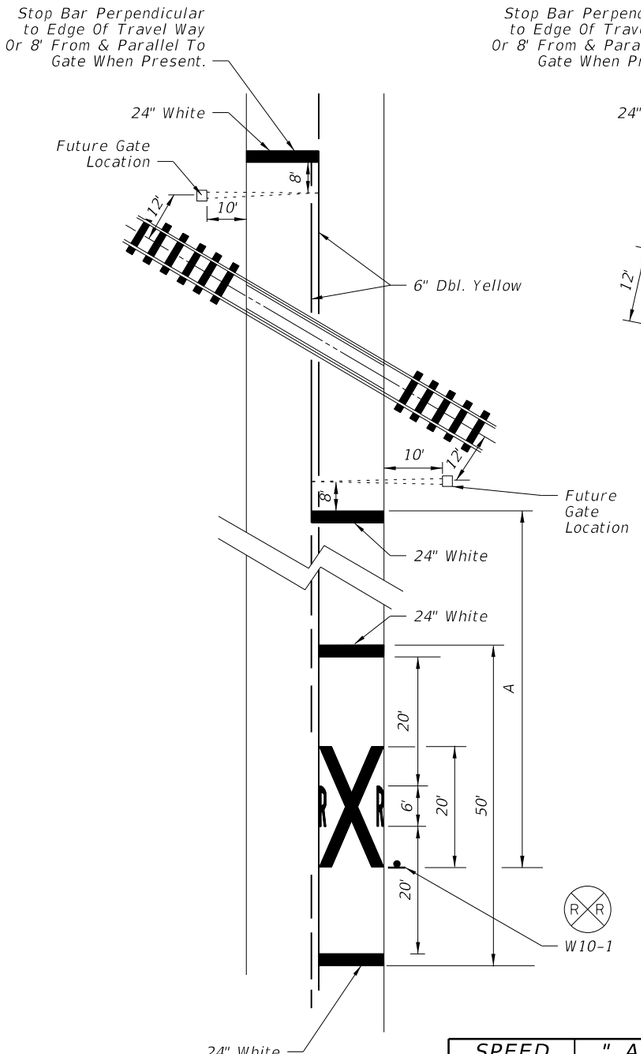

RAILROAD CROSSING AT MULTILANE ROADWAY

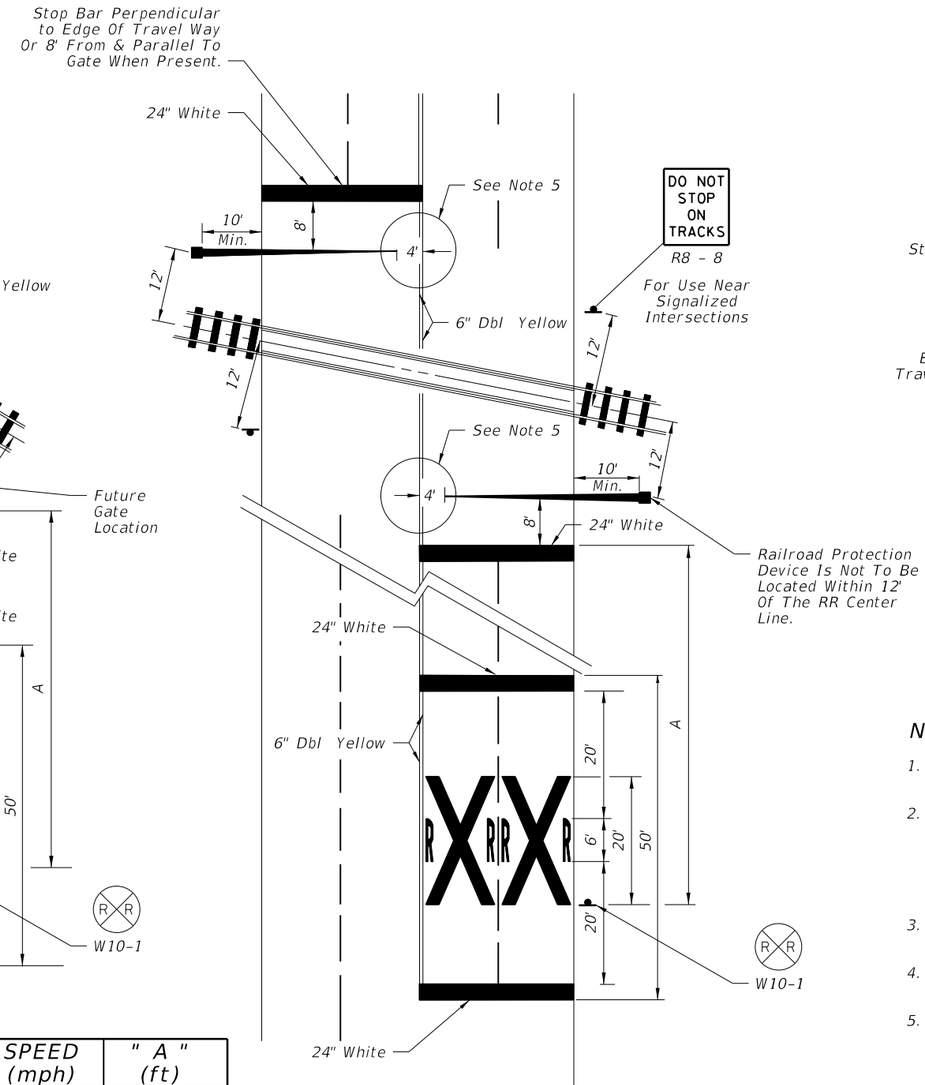

SPEED (mph)	" A " (ft)
60	400
55	325
50	250
45	175
40	125
35	100
URBAN	85 MIN.

RELATIVE LOCATION OF CROSSING TRAFFIC CONTROL DEVICES

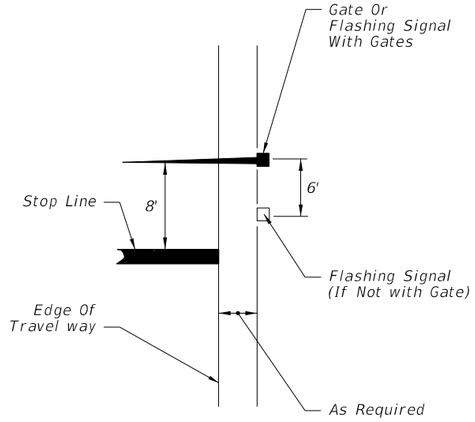

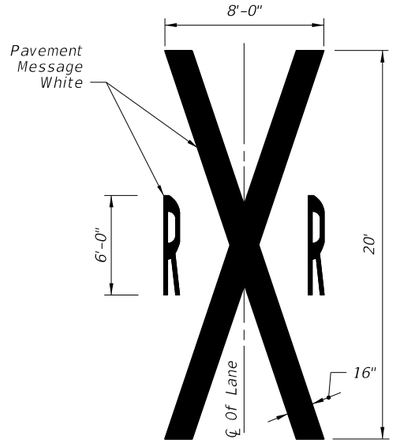

NOTES:

1. When computing pavement message, quantities do not include traverse lines.
2. Placement of sign W10-1 in a residential or business district, where low speeds are prevalent, the W10-1 sign may be placed a minimum distance of 100' from the crossing. Where street intersections occur between the RR pavement message and the tracks an additional W10-1 sign and additional pavement message should be used.
3. A portion of the pavement markings symbol should be directly opposite the W10-1 sign.
4. Recommended location for FTP-61-06 or FTP-62-06 signs, 100' urban and 300' rural. See Index 17355 for sign details.
5. Gate Length Requirements:
   For Two-way undivided sections:
   The gate should extend to within 1' of the center line. On multiple approaches the maximum gate length may not reach to within 1' of the center line. For those cases, the distance from the gate to the center line shall be a maximum of 4'.

   For one-way or divided sections:
   The gate shall be of sufficient length such that the distance from the gate tip to the inside edge of pavement is a maximum of 4'.

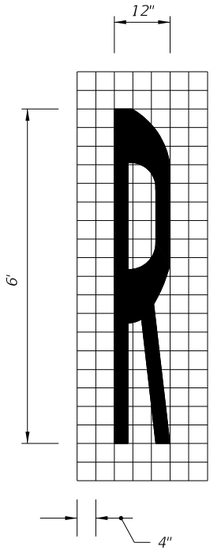

C:\d\projects\standards\roadway\17800-s\17882-03.dgn rd960rh 2:20:30 PM 6/28/2012

LAST REVISION	REVISION	DESCRIPTION:				
07/01/10			FDOT DESIGN STANDARDS 2013	RAILROAD GRADE CROSSING TRAFFIC CONTROL DEVICES	INDEX NO. 17882	SHEET NO. 3

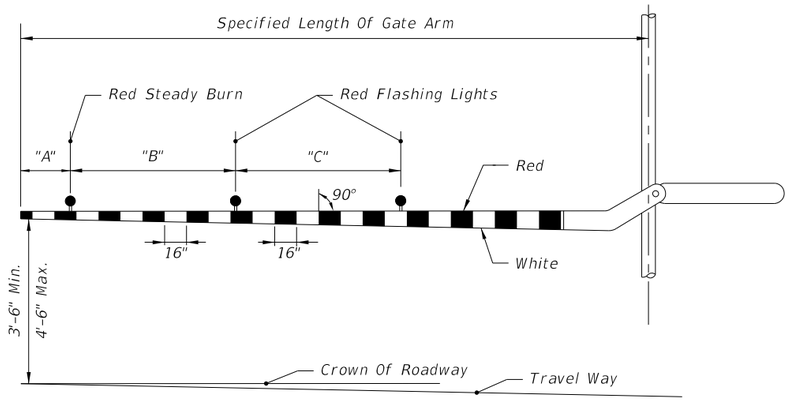

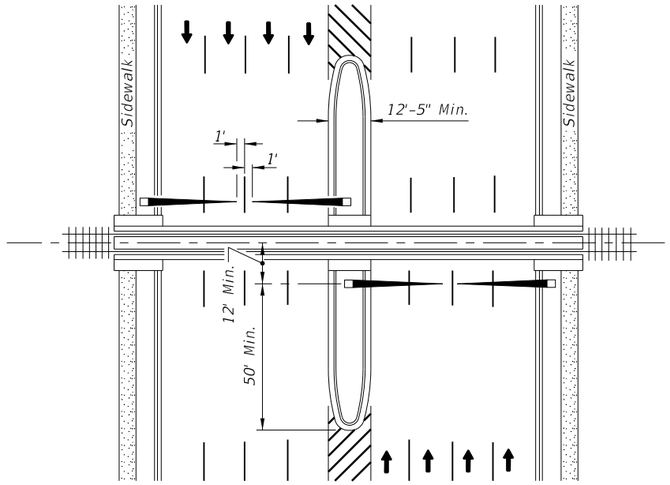

PLAN

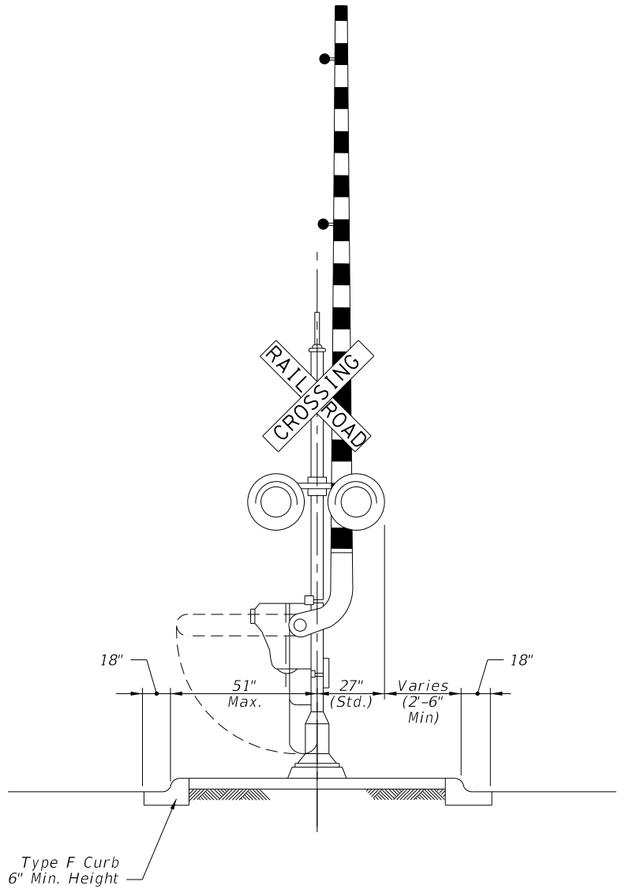

MEDIAN SECTION AT SIGNAL GATES

RAILROAD GATE ARM LIGHT SPACING

Specified Length Of Gate Arm	Dimension "A"	Dimension "B"	Dimension "C"
14 Ft.	6"	36"	5'
15 Ft.	18"	36"	5'
16-17 Ft.	24"	36"	5'
18-19 Ft.	28"	41"	5'
20-23 Ft.	28"	4'	5'
24-28 Ft.	28"	5'	5'
29-31 Ft.	36"	6'	6'
32-34 Ft.	36"	7'	7'
35-37 Ft.	36"	9'	9'
38 And Over	36"	10'	10'

NOTE:
For additional information see the "Manual On Uniform Traffic Control Devices", Part 8; The "Traffic Control Handbook" , Part VIII; and AASHTO "A Policy On Geometric Design Of Streets And Highways".

MEDIAN SIGNAL GATES FOR
MULTILANE UNDIVIDED URBAN SECTIONS
(THREE OR MORE DRIVING LANES IN ONE DIRECTION, 45 MPH OR LESS)

LAST REVISION	REVISION	DESCRIPTION:				
01/01/12			FDOT DESIGN STANDARDS 2013	RAILROAD GRADE CROSSING TRAFFIC CONTROL DEVICES	INDEX NO. 17882	SHEET NO. 4

C:\d\projects\standards\roadway\17800-s\17882-04.dgn rd960rh 2:20:32 PM 6/28/2012

TYPICAL BRIDGE MOUNTS

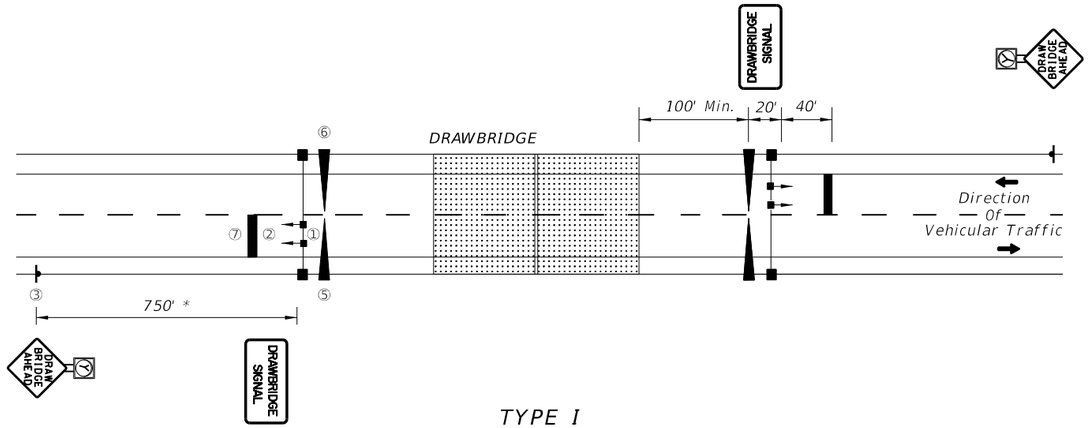

TYPE I

TO BE USED WHERE BRIDGE OPERATORS ARE FULL TIME OR A DAILY BASIS.

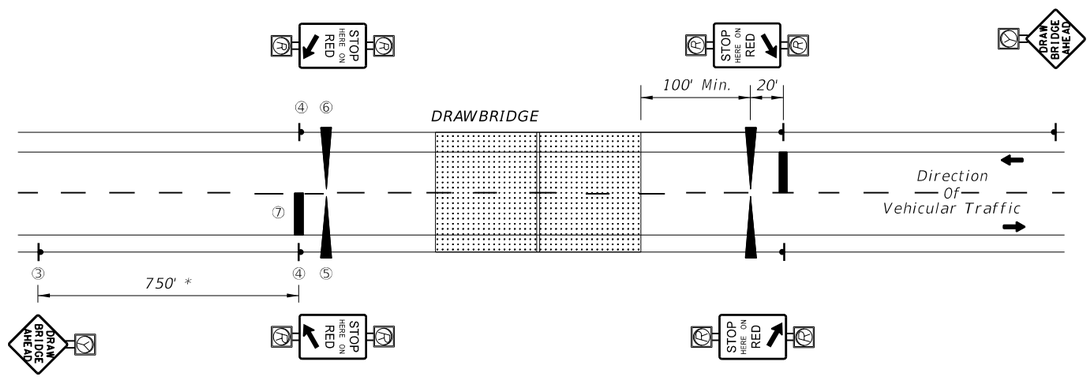

TYPE II

TO BE USED WHERE TYPE I IS NOT APPLICABLE (USUALLY WHEN THE BRIDGE OPERATOR IS "ON CALL").

LEGEND:

① TRAFFIC SIGNALS } Mast Arm Mounted (Off Bridge)
② DRAWBRIDGE SIGN } Monotube Support Mounted (On Bridge)
③ DRAWBRIDGE AHEAD SIGN WITH YELLOW FLASHING BEACON } Ground Mounted
④ STOP HERE ON RED SIGN WITH RED FLASHING BEACONS
⑤ ENTRANCE GATE
⑥ EXIT GATE
⑦ 24" THERMOPLASTIC STOP BAR

W8-5
SLIPPERY WHEN WET SIGN
See Note 11

NOTES:

1. A bypass switch shall be installed to override each timing interval in case of a malfunction.
2. "STOP HERE ON RED" is omitted in Type I operation and "TRAFFIC SIGNALS" are omitted in Type II operation.
3. The time between beginning of flashing yellow on "Drawbridge Ahead" sign and the clearance of traffic signal to red, or beginning of flashing red should not be less than the travel time of a passenger car, from the sign location to the stop line, traveling at the 85 percentile approach speed.
4. Beginning of operation of drawbridge gates shall not be less than 15 seconds after steady red or 20 seconds after flashing red (Actual time may be determined by the bridge tender.)
5. Time of gate lowering and raising is dependent upon gate type.
6. Time of bridge opening is determined by the bridge tender.
7. Each gate shall be operated by a separate switch.
8. On each approach (Type II), all four red signals shall be on the same two circuit flashers, with the two top signals on one circuit, and the two bottom signals on the alternately flashing circuit.
9. A Drawbridge Ahead sign is required for both types of signal operation, However a flashing beacon shall be added to the sign when physical conditions prevent a driver traveling at the 85% approach speed from having continuous view of at least one signal indication for approximately 10 seconds.
10. Requirements on gate installation are contained in Section 4I of the "Manual on Uniform Traffic Control Devices".
11. "In accordance with Traffic Engineering Manual (Topic Number 750-000-005) Section 2.1, SLIPPERY WHEN WET SIGNS shall be placed in advance of all MOVABLE and NONMOVABLE STEEL DECK BRIDGES."

* Field conditions may require adjustment of this standard distance.

SEQUENCE CHART

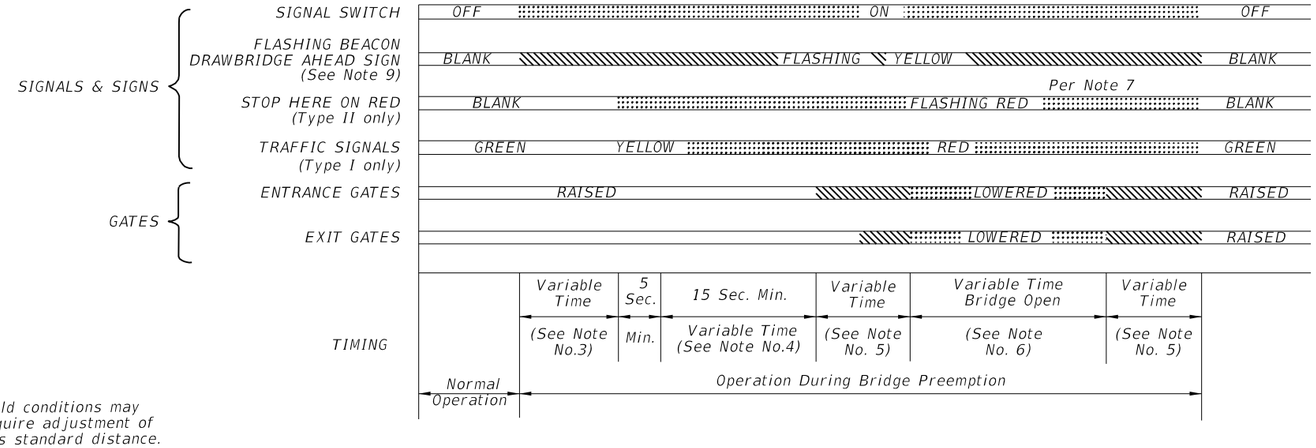

C:\d\projects\standards\roadway\17800-s\17890-01.dgn
rd960rh
2:20:34 PM
6/28/2012

LAST REVISION	REVISION	DESCRIPTION:			INDEX NO.	SHEET NO.
07/01/07			FDOT DESIGN STANDARDS 2013	TRAFFIC CONTROL DEVICES FOR MOVABLE SPAN BRIDGE SIGNALS	17890	1

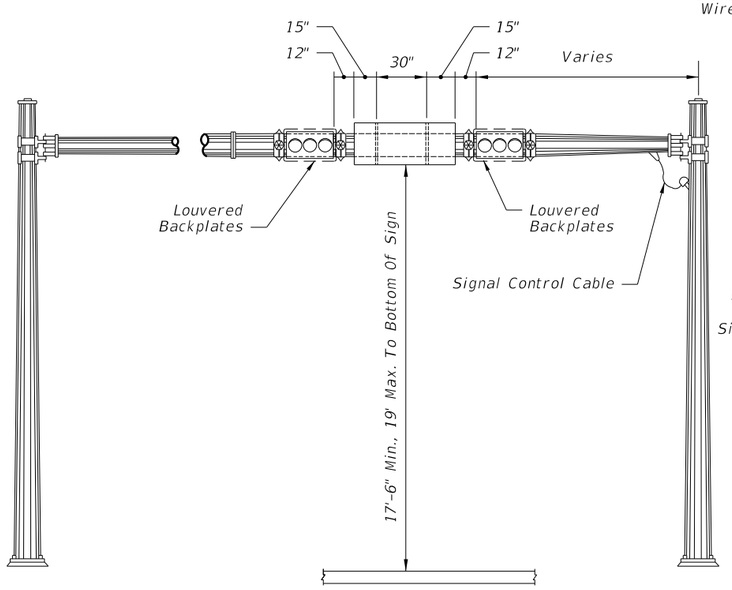

FIGURE - A

MONOTUBE SUPPORT MOUNTING

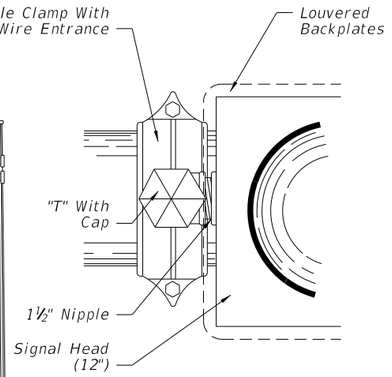

FIGURE - C

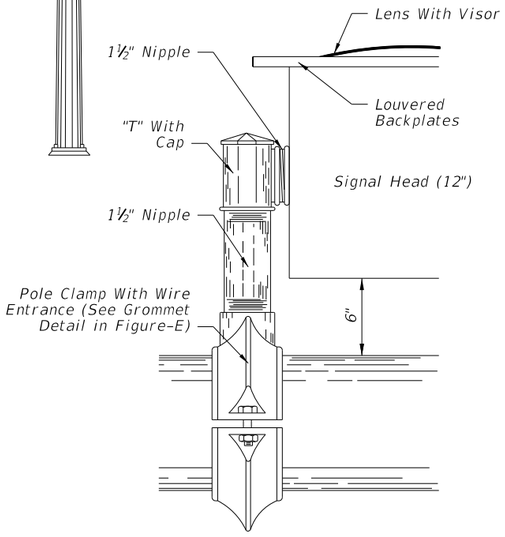

FIGURE - D

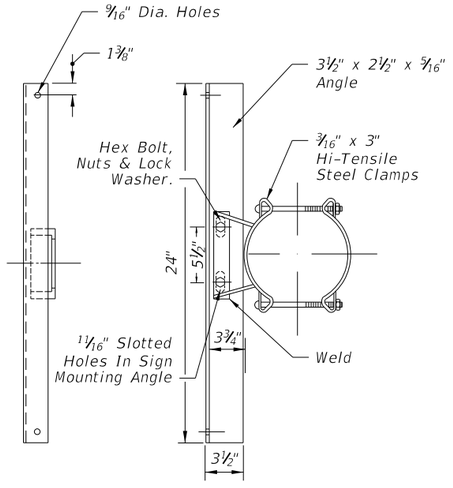

FIGURE - B

SIGN PANEL MOUNTING ASSEMBLY

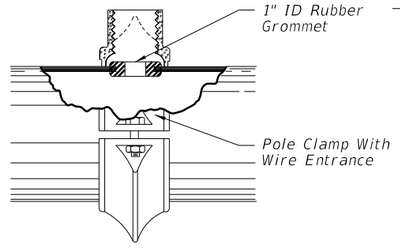

FIGURE - E

SIGNAL HEAD MOUNTING ASSEMBLY

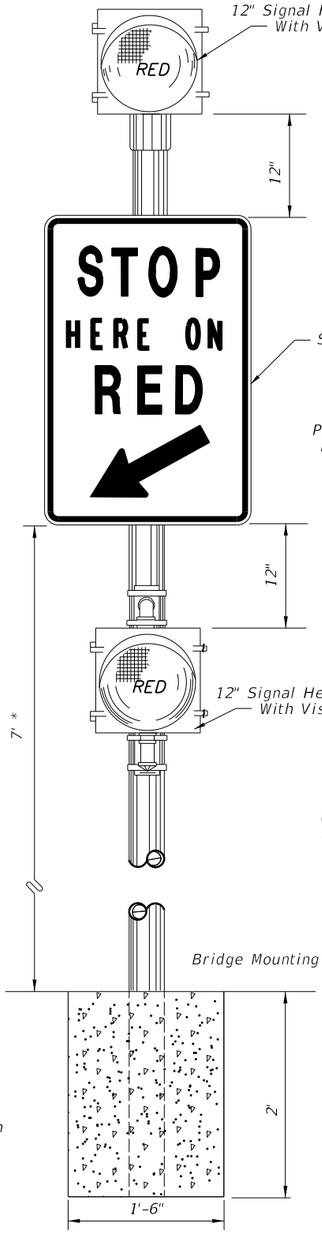

FIGURE - F

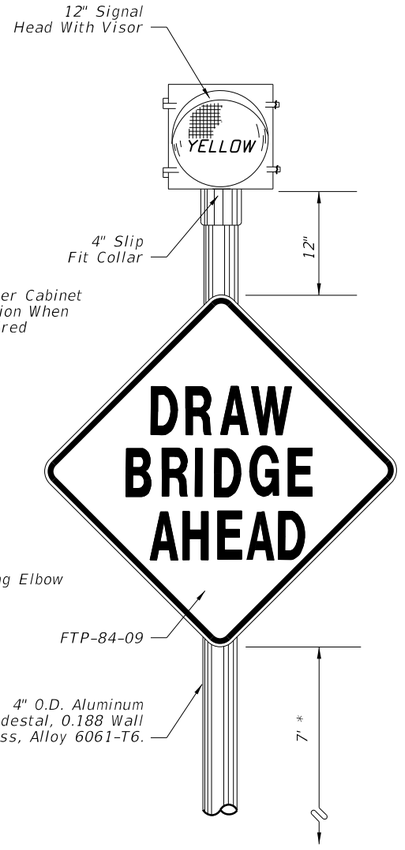

FIGURE - G

* Measured from the bottom of the sign to the near edge of the pavement. Horizontal distance between edge of the pavement and inside edge of sign will vary with condition at job site.

6/28/2012 2:20:36 PM rd960rh C:\d\projects\standards\roadway\17800-s\17890-02.dgn

LAST REVISION	REVISION	DESCRIPTION:				
01/01/12			FDOT DESIGN STANDARDS 2013	TRAFFIC CONTROL DEVICES FOR MOVABLE SPAN BRIDGE SIGNALS	INDEX NO. 17890	SHEET NO. 2

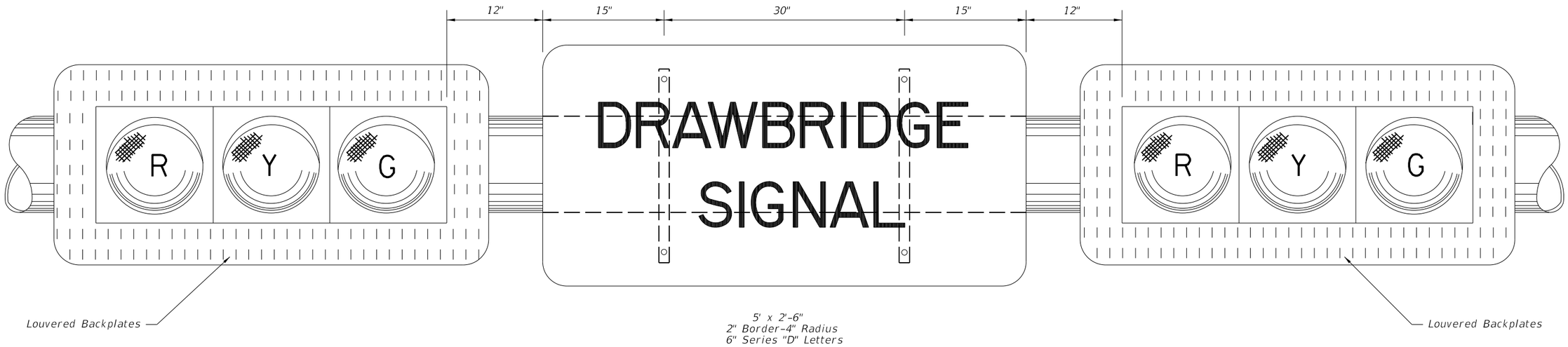

BLACK OPAQUE LEGEND AND BORDER ON REFLECTORIZED YELLOW BACKGROUND
TO BE USED WITH TYPE I OPERATION, AS SHOWN ON PREVIOUS SHEET
MONOTUBE SUPPORT MOUNTING

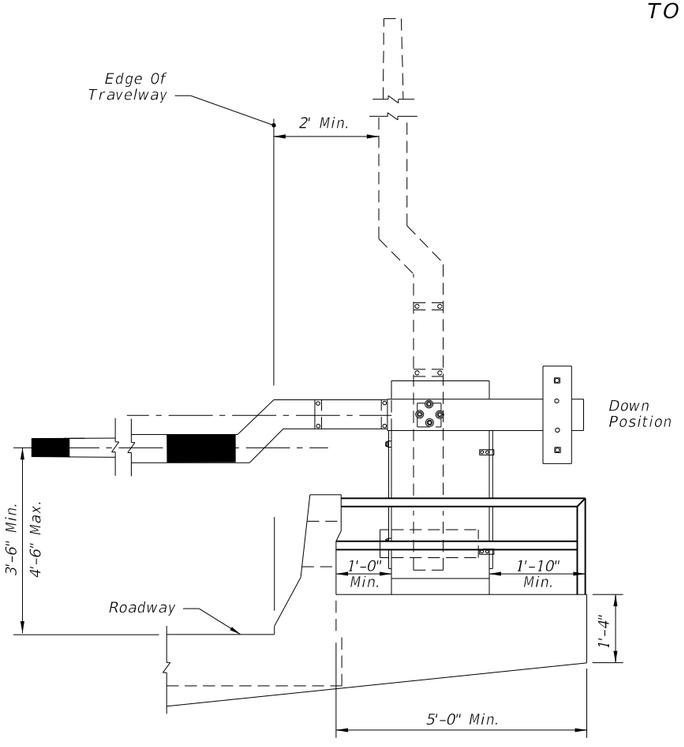

GATE & ARM DETAIL

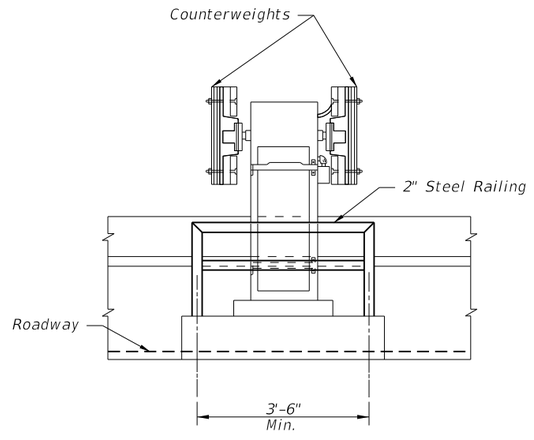

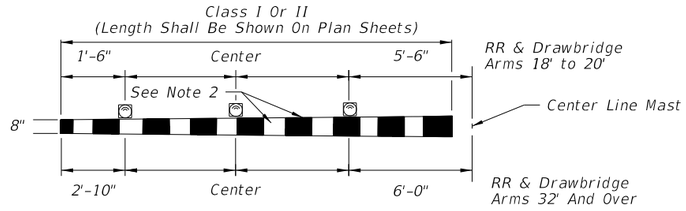

NOTES:

1. 12 volt flashing red lights shall be mounted on gate arm and shall operate in the flashing mode only when gate arm is in the lower position or in the process of being lowered. The number of lights shall vary accordingly to length of the gate arm.
2. 16" alternate diagonal fully reflectorized red and white stripes.

TYPICAL LAMP PLACEMENT

C:\d\projects\standards\roadway\17800-s\17890-03.dgn
rd960rh
2:20:38 PM
6/28/2012

LAST REVISION	REVISION	DESCRIPTION:		FDOT DESIGN STANDARDS 2013	TRAFFIC CONTROL DEVICES FOR MOVABLE SPAN BRIDGE SIGNALS	INDEX NO.	SHEET NO.
07/01/09						17890	3

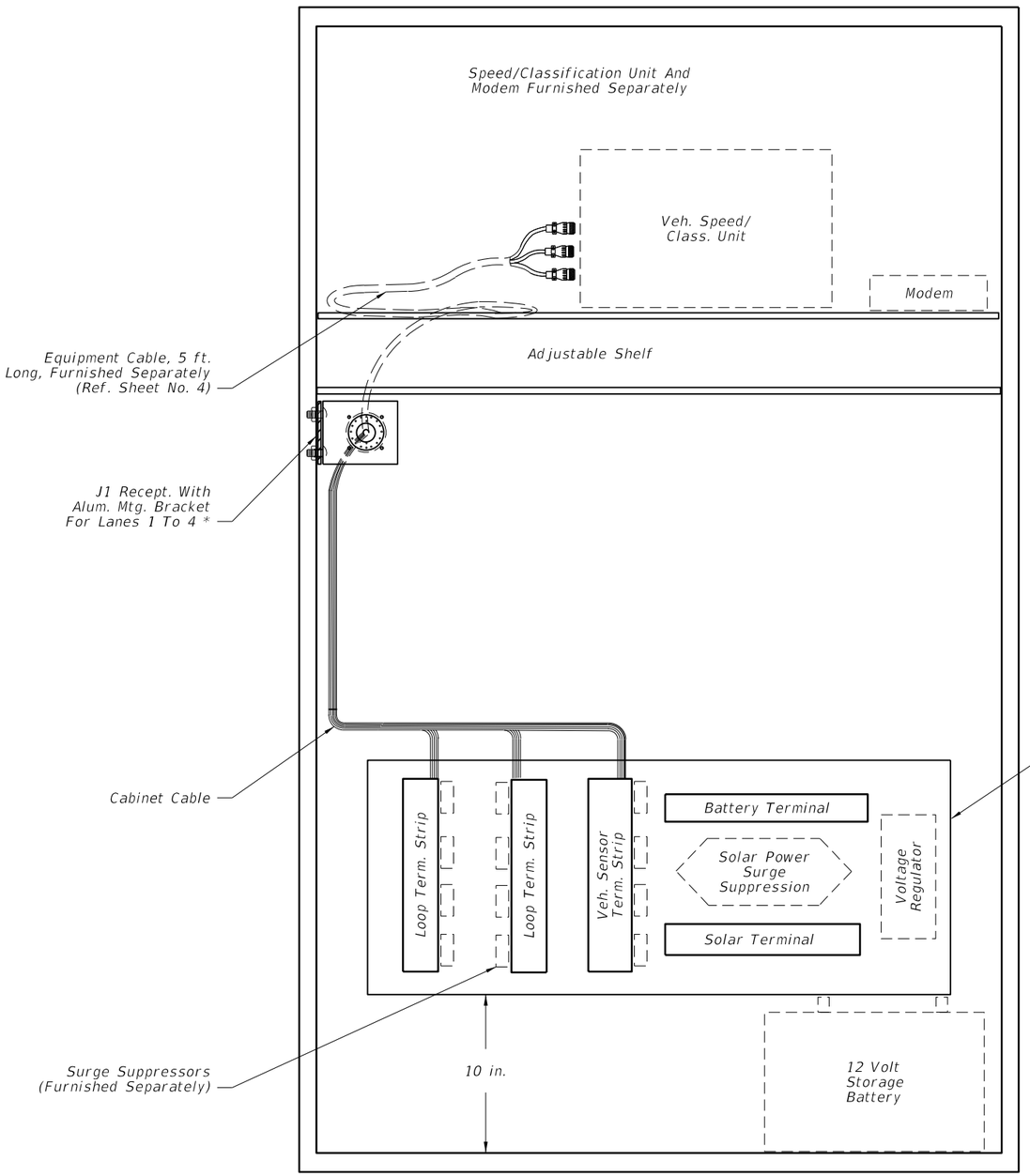

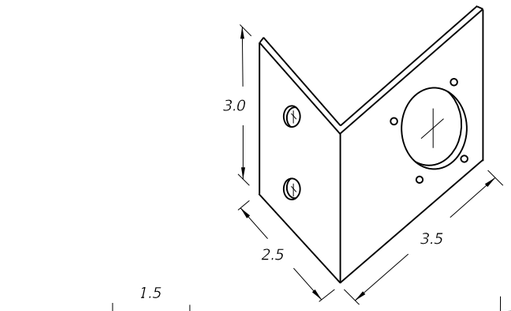

Note:
Bracket shall be fabricated of .090 – 0.125 inch thick aluminum.
Dimensions may vary depending on the manufacturer of the J1 receptacle being furnished. The cabinet manufacturer will construct the mtg. bracket to fit the receptacle.

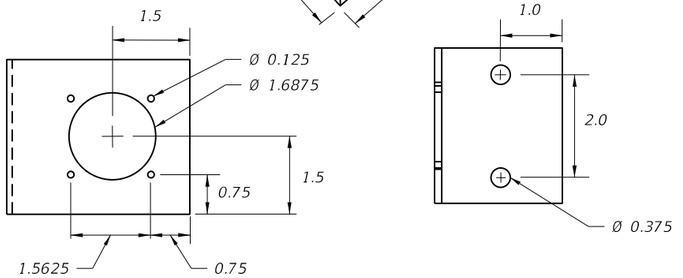

J1 MOUNTING BRACKET

All bracket dimensions are in inches

1. Traffic monitoring site cabinet includes:
   - A. One adjustable shelf; (equipped as shown)
   - B. One backplane ass'y;
   - C. One J1 receptacle with mounting bracket;
   - D. All associated wiring and wiring harnesses.

2. Basic backplane assembly consists of:
   - A. Two inductive loop terminal strips;
   - B. One vehicle sensor terminal strip;
   - C. One battery terminal strip;
   - D. One solar panel terminal strip.

* The contractor shall be responsible for contacting the FDOT planning office for lane number information and verification.

CABINET LAYOUT DETAIL (For Up To Four Lanes)

C:\d\projects\standards\planning\17900-s\17900-01.dgn rd960rh 2:20:41 PM 6/28/2012

LAST REVISION	REVISION	DESCRIPTION:		FDOT DESIGN STANDARDS 2013	TRAFFIC MONITORING SITE	INDEX NO.	SHEET NO.
07/01/07						17900	1

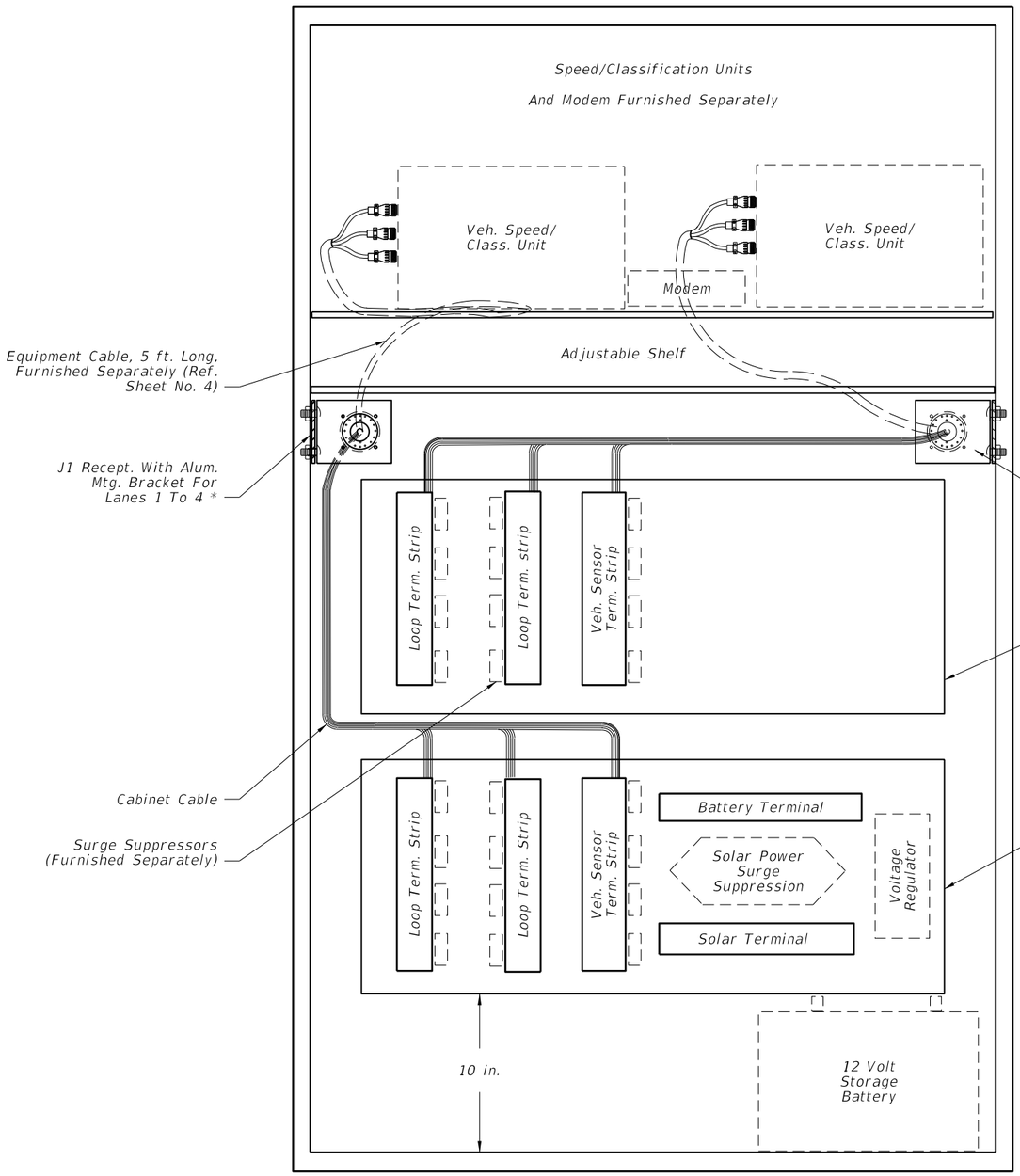

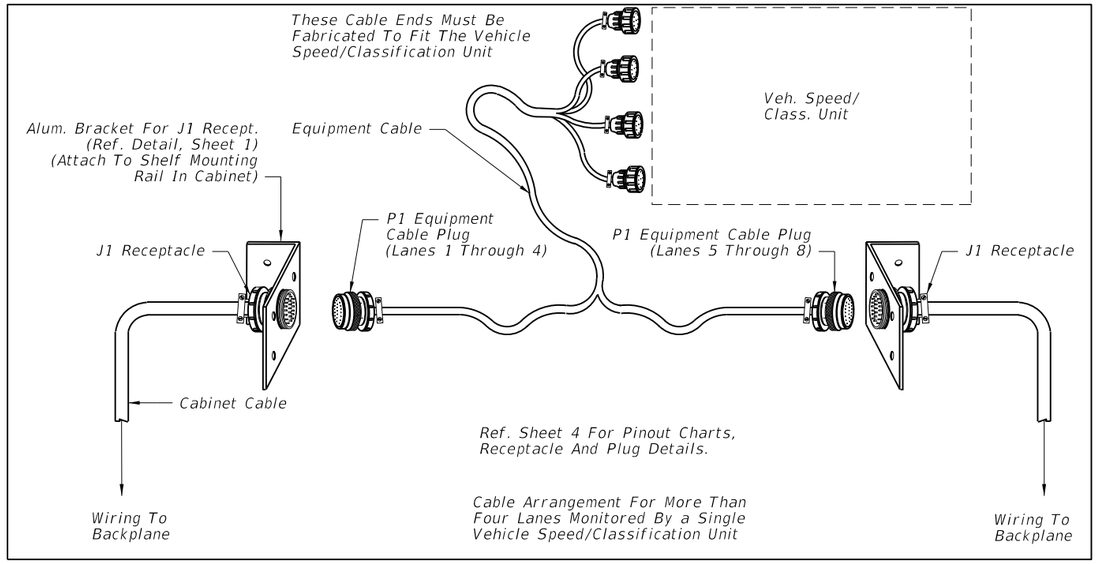

1. Traffic monitoring site cabinet includes:
   - A. One adjustable shelf;
   - B. Two backplane assemblies (equipped as shown);
   - C. Two J1 receptacles with mtg. brackets;
   - D. All associated wiring and wiring harnesses.

2. Basic backplane assembly consists of:
   - A. Two inductive loop terminal strips;
   - B. One vehicle sensor terminal strip;
   - C. One battery terminal strip;
   - D. One solar panel terminal strip.

* The contractor shall be responsible for contacting the FDOT planning office for lane number information and verification.

CABINET LAYOUT DETAIL (For More Than Four Lanes And Up To Eight Lanes)

6/28/2012 2:20:43 PM rd960rh C:\d\projects\standards\planning\17900-s\17900-02.dgn

LAST REVISION	REVISION	DESCRIPTION:		FDOT DESIGN STANDARDS 2013	TRAFFIC MONITORING SITE	INDEX NO.	SHEET NO.
07/01/07						17900	2

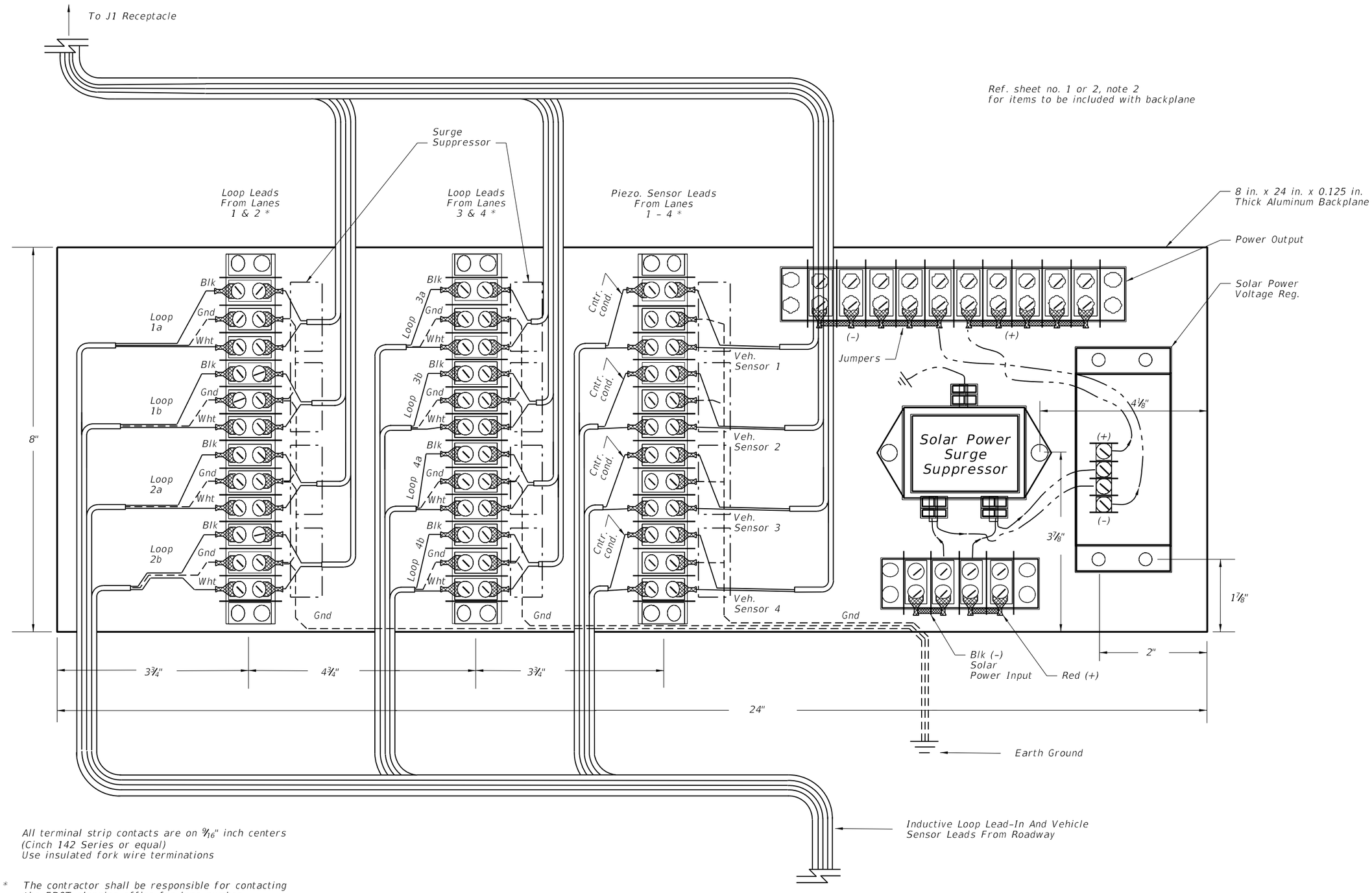

All terminal strip contacts are on 9/16" inch centers
(Cinch 142 Series or equal)
Use insulated fork wire terminations

* The contractor shall be responsible for contacting the FDOT planning office for lane number information and verification.

CABINET BACKPLANE DETAIL

LAST REVISION	REVISION	DESCRIPTION:			INDEX NO.	SHEET NO.
07/01/07			FDOT DESIGN STANDARDS 2013	TRAFFIC MONITORING SITE	17900	3

C:\d\projects\standards\planning\17900-s\17900-03.dgn
rd960rh
2:20:45 PM
6/28/2012

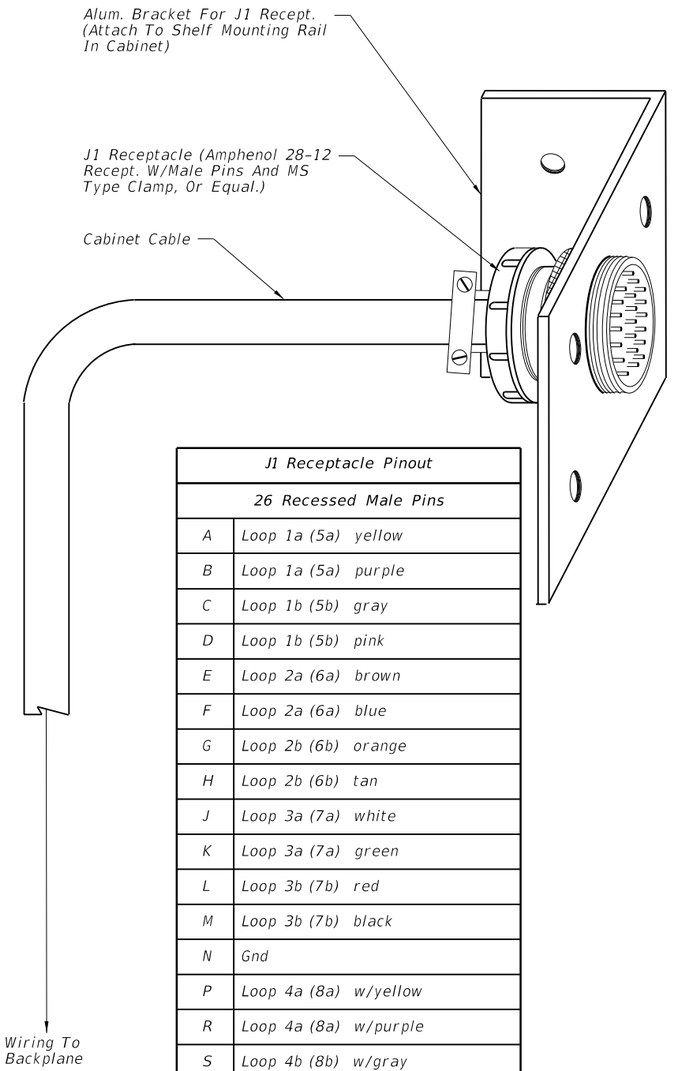

J1 Receptacle Pinout	
26 Recessed Male Pins	
A	Loop 1a (5a) yellow
B	Loop 1a (5a) purple
C	Loop 1b (5b) gray
D	Loop 1b (5b) pink
E	Loop 2a (6a) brown
F	Loop 2a (6a) blue
G	Loop 2b (6b) orange
H	Loop 2b (6b) tan
J	Loop 3a (7a) white
K	Loop 3a (7a) green
L	Loop 3b (7b) red
M	Loop 3b (7b) black
N	Gnd
P	Loop 4a (8a) w/yellow
R	Loop 4a (8a) w/purple
S	Loop 4b (8b) w/gray
T	Loop 4b (8b) w/brown
U	Piezo 1 (5) (+) w/blue
V	Piezo 1 (5) sh w/orange
W	Piezo 2 (6) (+) w/green
X	Piezo 2 (6) sh w/red
Y	Piezo 3 (7) (+) w/black
Z	Piezo 3 (7) sh w/red/blk
a	Piezo 4 (8) (+) red/green
b	Piezo 4 (8) sh red/yellow
d	Gnd red/black

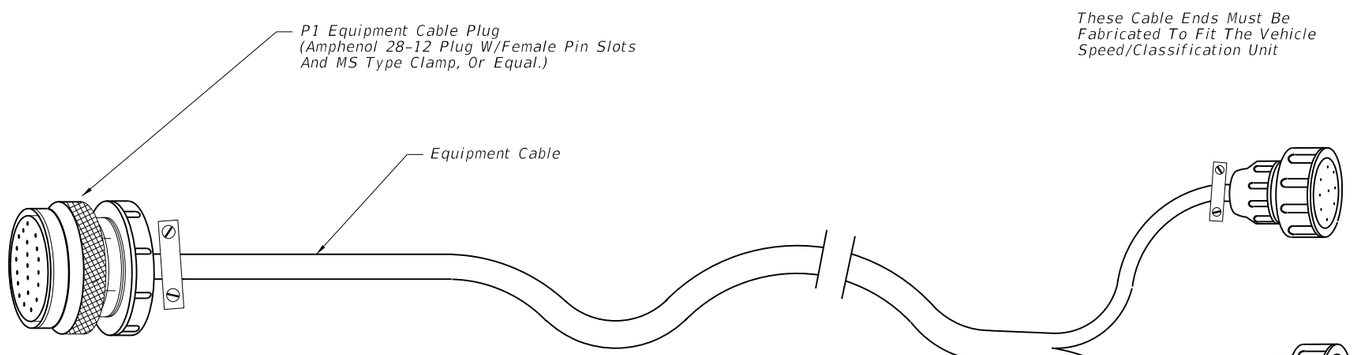

P1 Equipment Cable Plug		
26 Female Pin Slots		
A	Loop 1a (5a)	Connects To Electronics Unit
B	Loop 1a (5a)	
C	Loop 1b (5b)	
D	Loop 1b (5b)	
E	Loop 2a (6a)	
F	Loop 2a (6a)	
G	Loop 2b (6b)	
H	Loop 2b (6b)	
N	Gnd	
J	Loop 3a (7a)	Connects To Electronics Unit
K	Loop 3a (7a)	
L	Loop 3b (7b)	
M	Loop 3b (7b)	
P	Loop 4a (8a)	
R	Loop 4a (8a)	
S	Loop 4b (8b)	
T	Loop 4b (8b)	
d	Gnd	
U	Piezo 1 (5) (+)	Connects To Electronics Unit
V	Piezo 1 sh	
W	Piezo 2 (6) (+)	
X	Piezo 2 sh	
Y	Piezo 3 (7) (+)	
Z	Piezo 3 sh	
a	Piezo 4 (8) (+)	
b	Piezo 4 sh	

NOTE:

The equipment cable can accommodate up to four lanes of inductive loop and vehicle sensor inputs. (Ref. Sheet No. 1 for cabinet layout)

For more than four lanes and up to eight lanes of inputs, the following options are available:

1. A second Vehicle Speed/Class. Unit and separate equipment cable connecting to a second J1 receptacle; or
2. A single Vehicle Speed/Class. Unit capable of up to eight lanes of inputs and a single equipment cable with split ends to fit two J1 receptacles. (Ref. Sheet 2 detail)

Numbers in parenthesis in the pinout chart identify lane numbers when a second backplane for lanes 5 through 8 is required.

NOTE:

The contractor shall be responsible for contacting the FDOT planning office for lane number information and verification.

EQUIPMENT CABLE DETAIL

C:\d\projects\standards\planning\17900-s\17900-04.dgn
rd960rh
2:20:47 PM
6/28/2012

LAST REVISION	REVISION	DESCRIPTION:	FDOT DESIGN STANDARDS 2013	TRAFFIC MONITORING SITE	INDEX NO.	SHEET NO.
07/01/07					17900	4

TYPICAL FOR UP TO 4 LANES OF SENSOR LEADS PULLED TO ONE SIDE OF THE ROADWAY

ROADWAYS WITH PAVED SHOULDERS

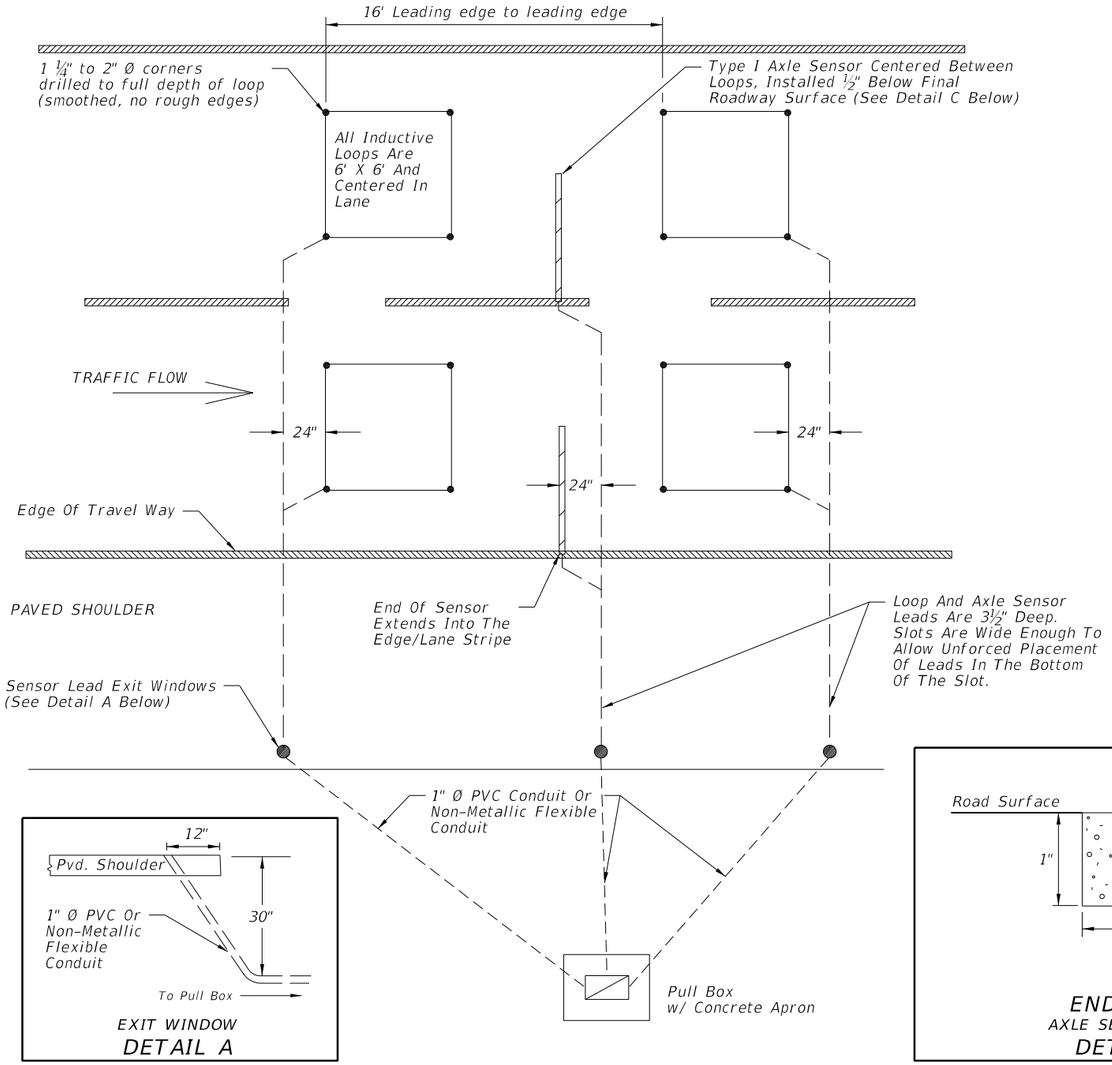

EXIT WINDOW
DETAIL A

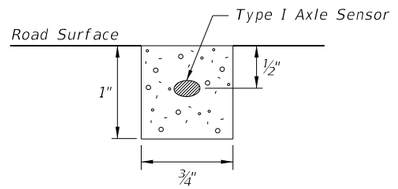

END VIEW
AXLE SENSOR SLOT
DETAIL C

CURB & GUTTER ROADWAYS

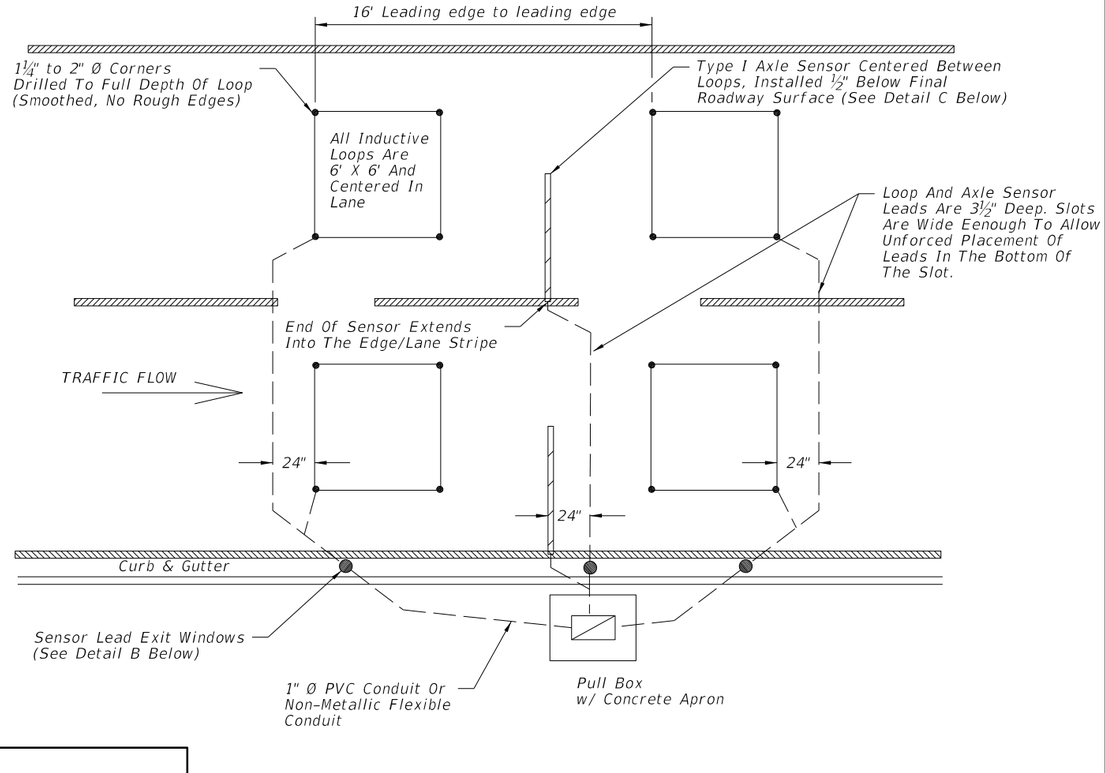

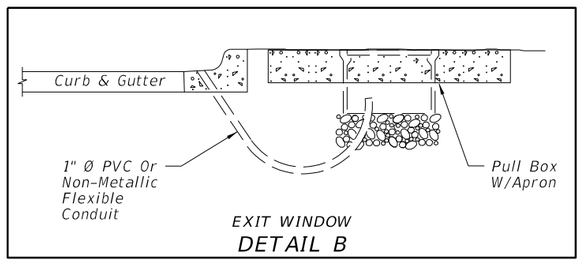

EXIT WINDOW
DETAIL B

NOTES:

1. Type I axle sensors shall be installed after placement of the friction course. Loops associated with axle sensors shall also be installed after placement of the friction course.
2. Inductive loops slots shall be cut 3½" deep. Loop slots will be cut wide enough to allow unforced placement of the wire into the bottom of the slot. Four turns of #12 AWG, type XHHW stranded copper wire, or #14 AWG, IMSA 51-7 copper wire shall be placed in the slot. Short pieces of backer rod (2" to 3" in length) shall be placed every 18" to 24" to hold the loop wire in the bottom of the slot.
3. Loop leads shall be twisted at the rate of 6 to 8 twists per foot. For loops that are within 150' of the cabinet, the twisted pair loop wire shall be extended directly to the cabinet and no shielded lead-in cable is required. For distances over 150', #14 IMSA 50-2 shielded lead-in cable must be spliced to the loop wire twisted pair at the first pull box to which the loop wire is pulled.
4. The Contractor shall be responsible for contacting the FDOT office that maintains the traffic monitoring site in order to obtain lane numbering identification. All leads shall be labeled with permanent markers to indicate their lane number and position. For example: The leading loop (the first loop a vehicle encounters) in the lane designated as number 1, shall be marked as "1A". The trailing loop. if present, shall be marked "1B". If an axle sensor is present, the sensor will be marked as "P1" for lane #1, P2 for lane #2, and so on for all lanes.
5. See Index 17700 for pull box and apron details.
6. All splices will be performed using splice kits designed for direct burial. Splice kits will include screw on wire connectors and a housing with sufficient sealant to fully encapsulate the spliced connections. Taped splices are not permitted.

LANE LAYOUT FOR TMS INDUCTIVE LOOP AND TYPE I AXLE SENSOR

LAST REVISION	REVISION	DESCRIPTION:		FDOT DESIGN STANDARDS 2013	TRAFFIC MONITORING SITE	INDEX NO.	SHEET NO.
01/01/12						17900	5

C:\d\projects\standards\planning\17900-s\17900-05.dgn rd960rh 2:20:50 PM 6/28/2012

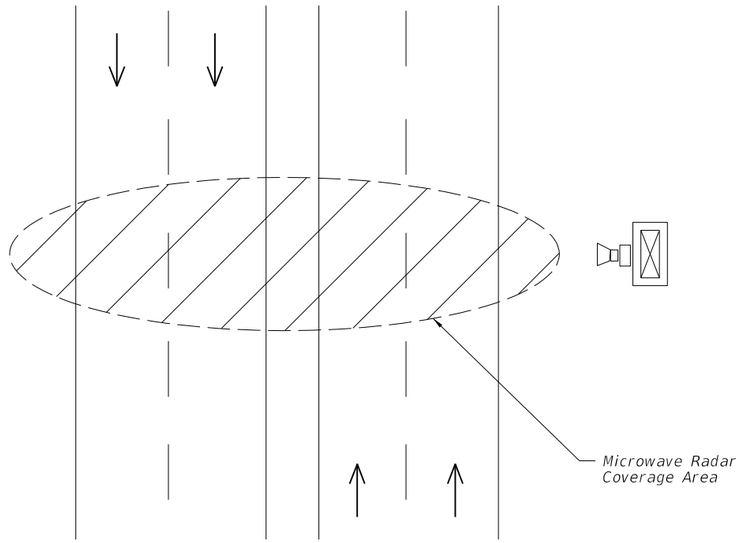

PLAN VIEW

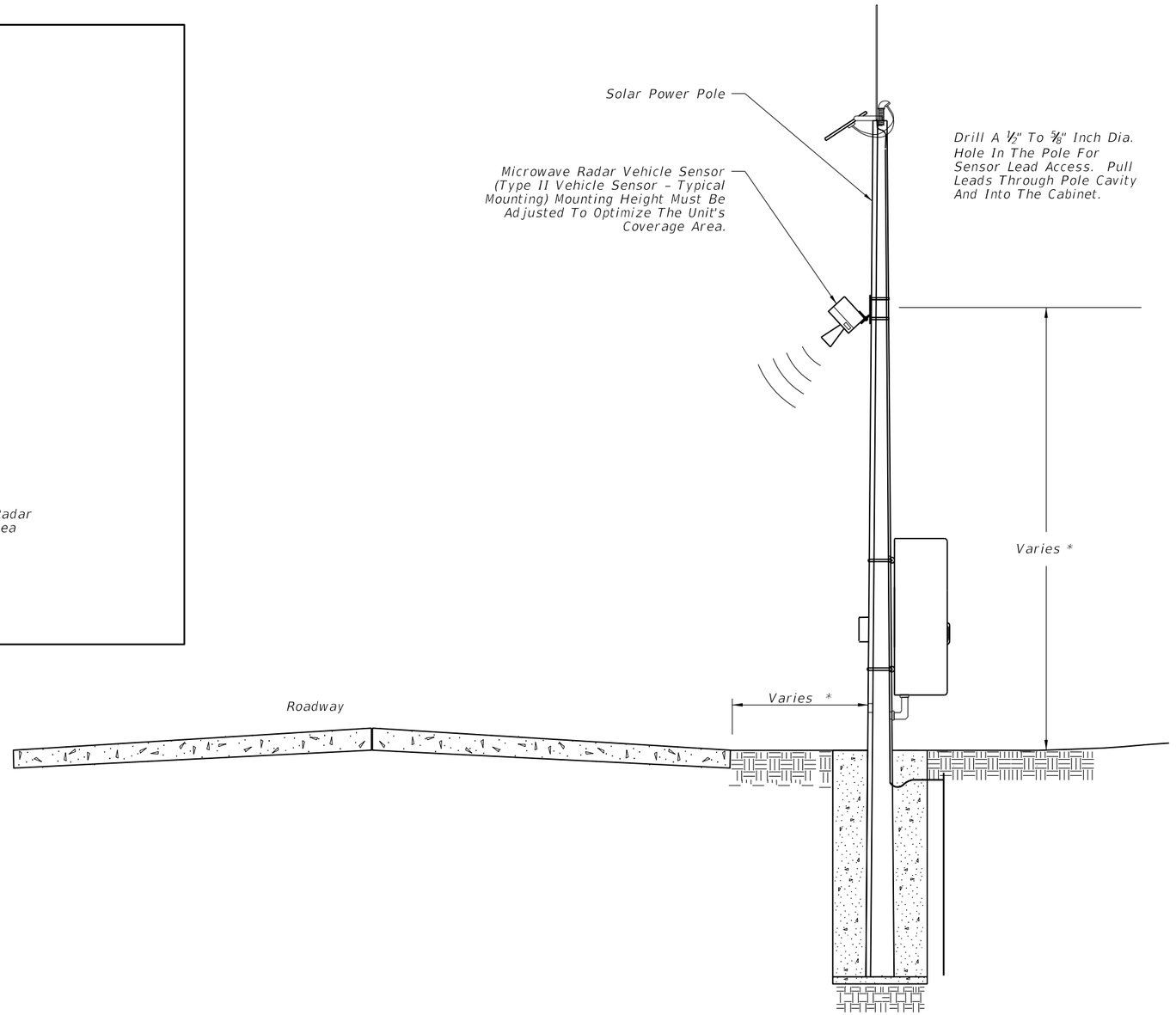

The Unit Must Be Capable Of Detecting Up To Eight Lanes Of Traffic (In Either Or Both Directions) When Mounted Perpendicular To The Roadway.

Coverage Area Of The Unit Is Affected By The Roadway Geometry: Distance From The Travel Lanes, Median Type And Width, Barrier Walls, Etc.

* Mounting height of the unit and offset from the roadway must be determined on a site-by-site basis, in accordance with the manufacturer's recommended guidelines. Offset of pole must be greater than or equal to minimum clear zone requirements.

TYPE II WIRELESS VEHICLE SENSOR MICROWAVE RADAR

LAST REVISION	REVISION	DESCRIPTION:		FDOT DESIGN STANDARDS 2013	TRAFFIC MONITORING SITE	INDEX NO.	SHEET NO.
01/01/12						17900	6

6/28/2012 2:20:52 PM rd960rh C:\d\projects\standards\planning\17900-s\17900-06.dgn

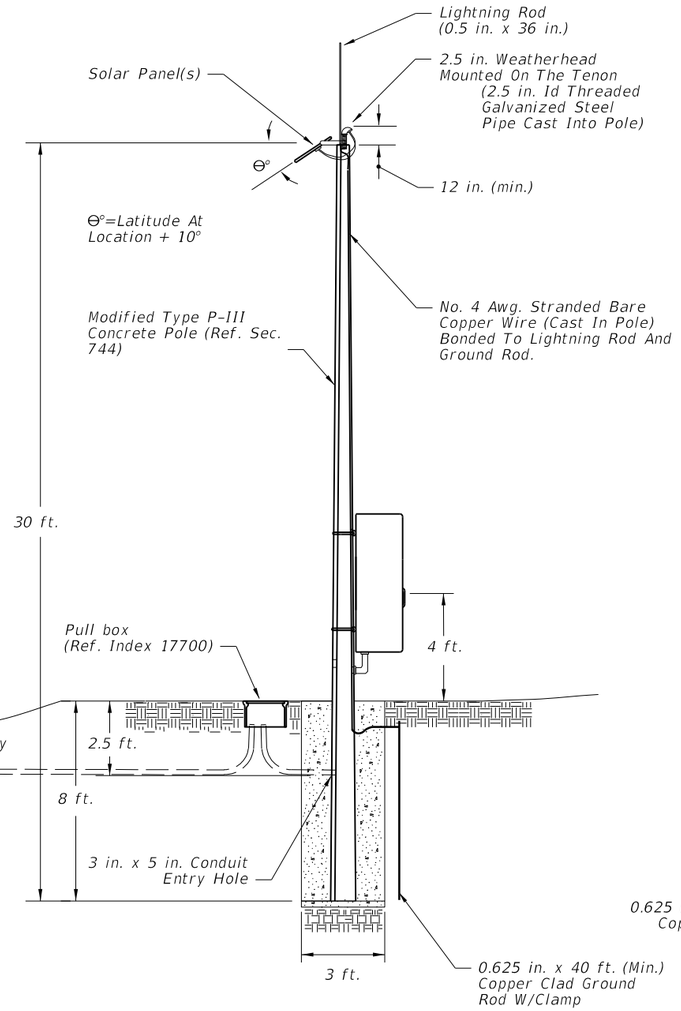

SOLAR POWER POLE
WITH POLE MTD. CABINET

Note: Cabinet installed per Index 17841 except cabinet center will be 4 feet above grade.

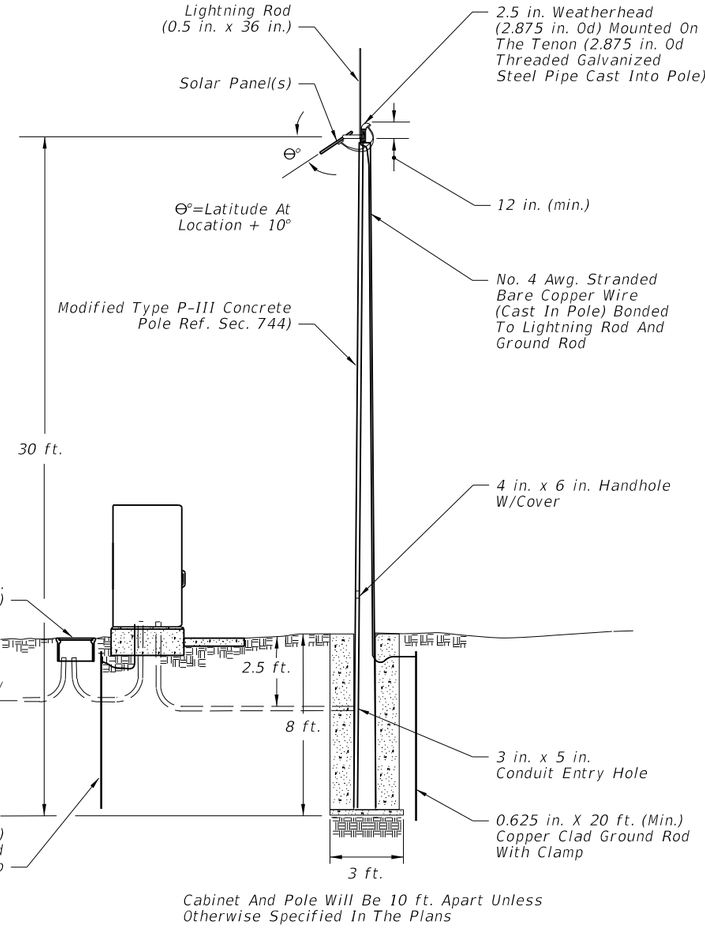

Cabinet And Pole Will Be 10 ft. Apart Unless Otherwise Specified In The Plans

SOLAR POWER POLE
WITH BASE MTD. CABINET

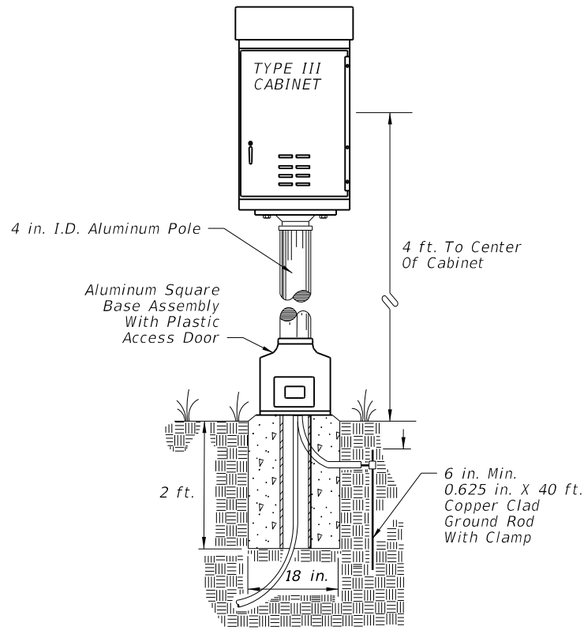

PEDESTAL MTD. CABINET

Wire for Solar Panel Array installations shall be #10 AWG stranded copper, Red insulation is THHN or THWN for positive 12 volts wiring, Black insulation is THHN or THWN for negative, 12 volts wiring, Green insulation is THHN or THWN for ground bonding of the solar panel frame to the pole and earth.

Pole placement shall be in accordance with section 125.4 and 125.8.2 of the Standard Specifications.

SOLAR POWER POLE DETAIL

C:\d\projects\standards\planning\17900-s\17900-07.dgn rd960rh 2:20:54 PM 6/28/2012

LAST REVISION	REVISION	DESCRIPTION:		FDOT DESIGN STANDARDS 2013	TRAFFIC MONITORING SITE	INDEX NO.	SHEET NO.
01/01/12						17900	7

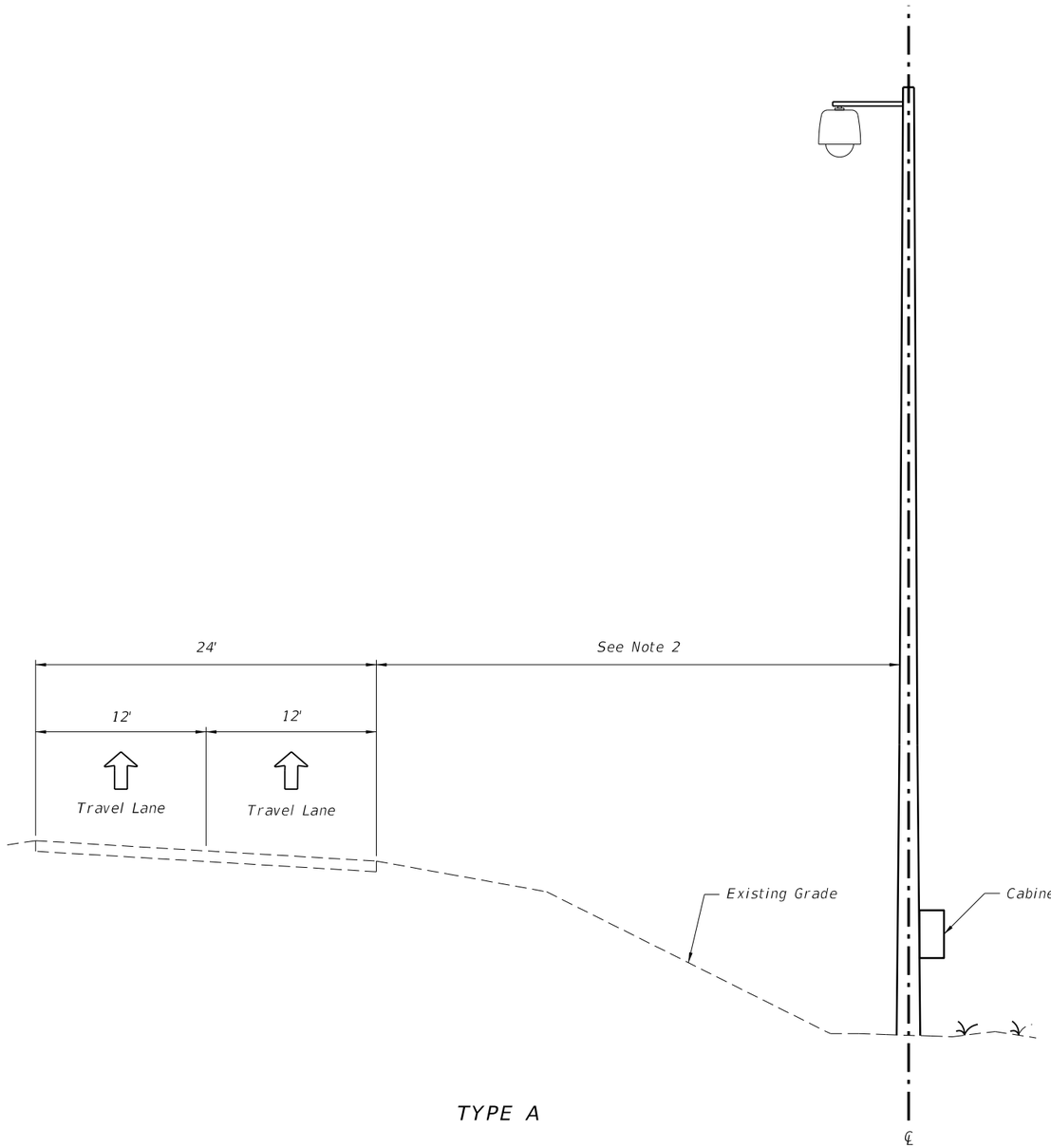

TYPE A

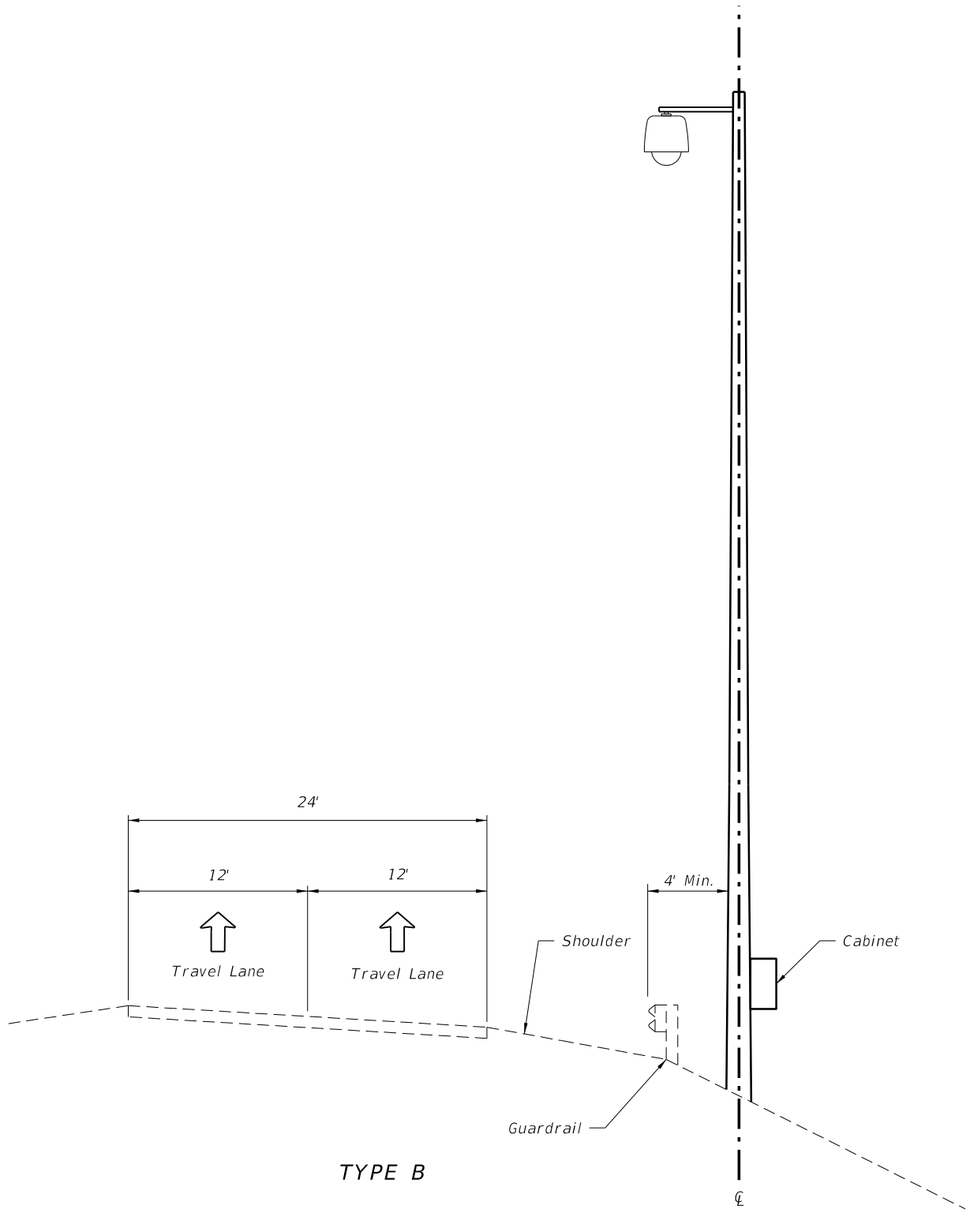

TYPE B

GENERAL NOTES:

1. For location where pole foundation is lower than roadway, mount CCTV cabinet on pole. Clear zone shall be measured to the edge of drilled shaft if drilled shaft is more than 4" above adjacent grade.
2. Distance must be in accordance with project design documents and greater than or equal to minimum clear zone requirements.

LAST REVISION	REVISION	DESCRIPTION:		FDOT DESIGN STANDARDS 2013	CCTV POLE PLACEMENT	INDEX NO.	SHEET NO.
07/01/07						18100	1

C:\d\projects\standards\its\18000-s\18100-01.dgn
rd960rh
2:20:56 PM
6/28/2012

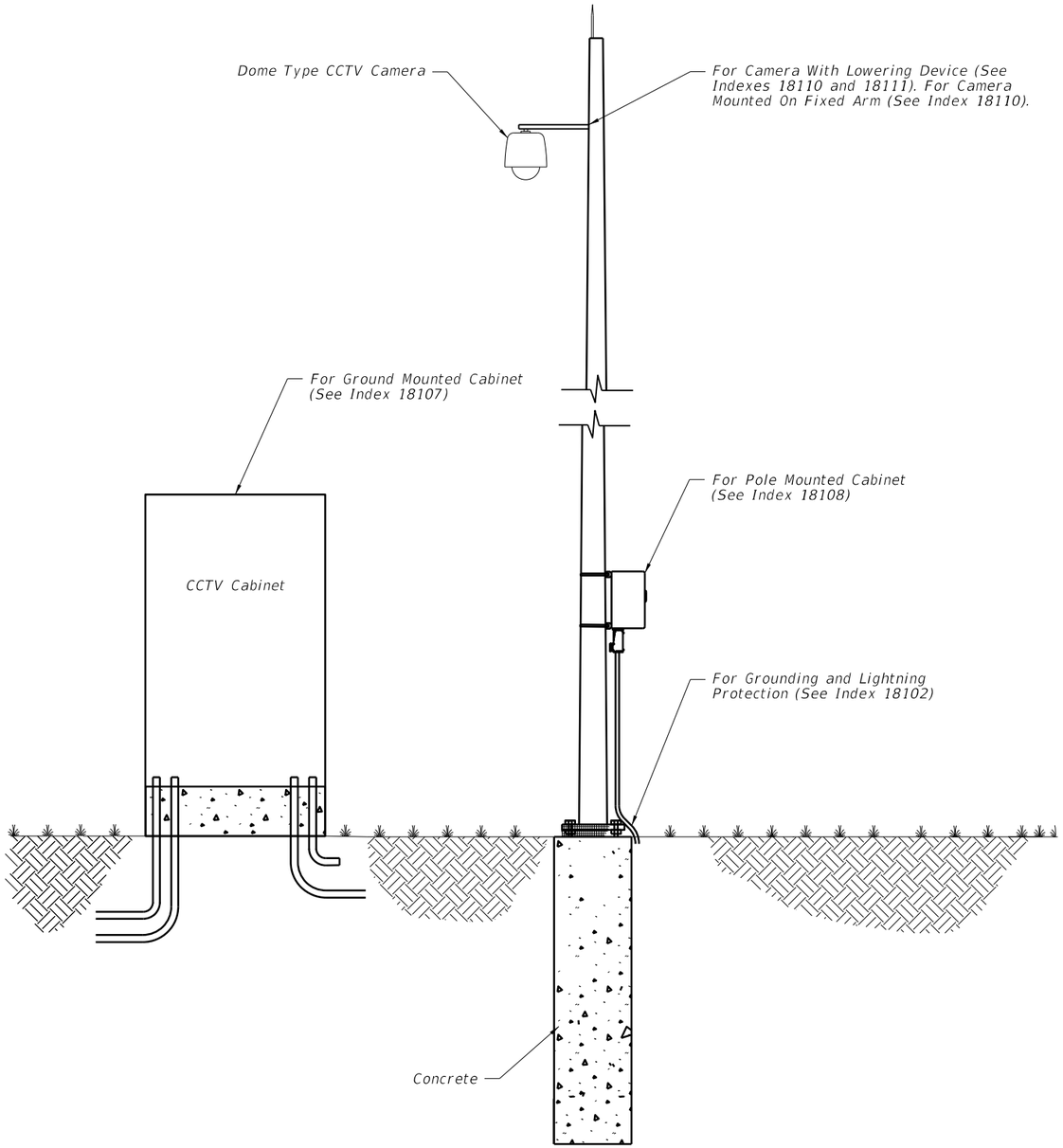

STEEL POLE

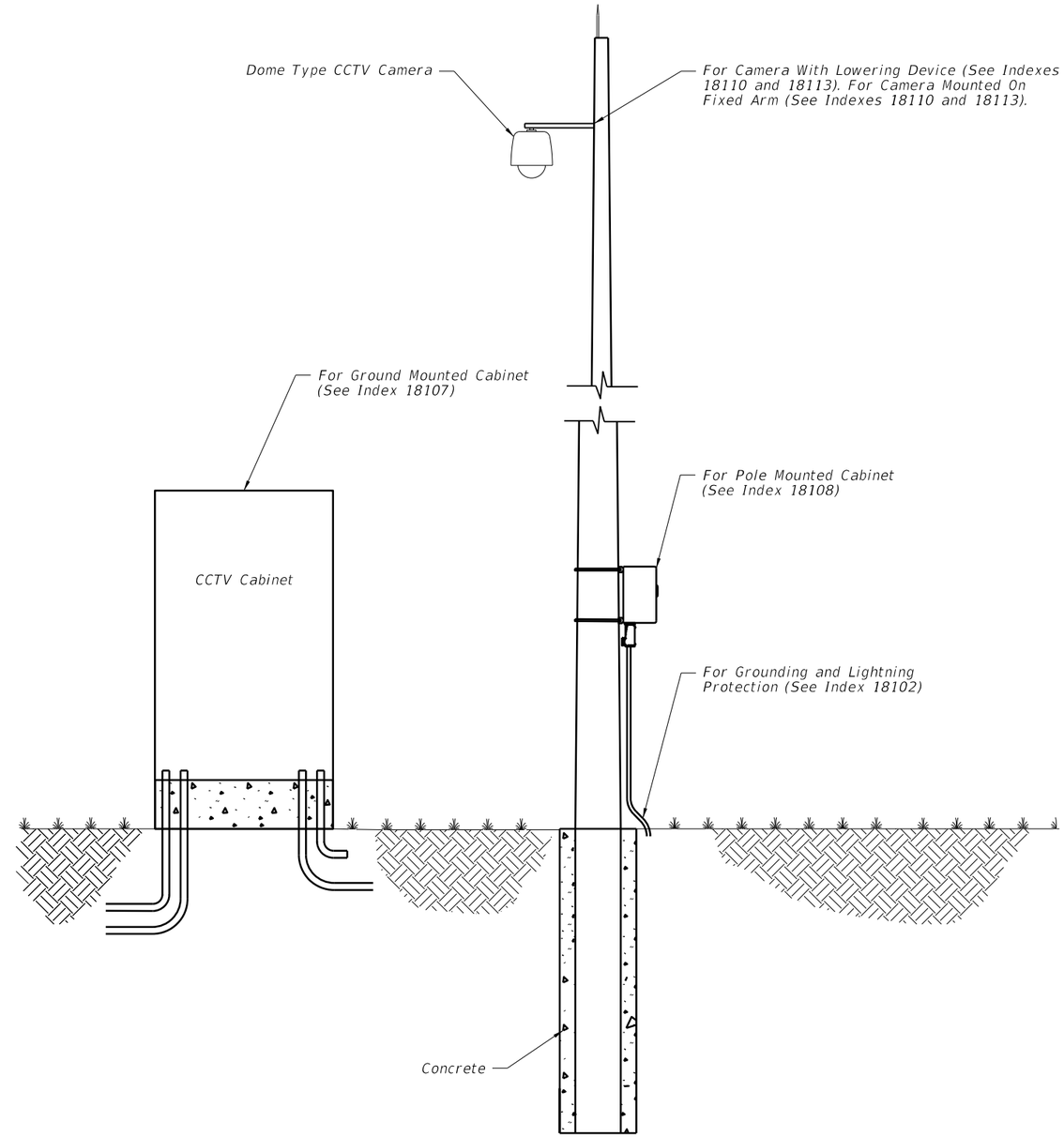

CONCRETE POLE

C:\d\projects\standards\fls\18000-s\18101-01.dgn
rd960rh
2:21:04 PM
6/28/2012

LAST REVISION	REVISION	DESCRIPTION:			INDEX NO.	SHEET NO.
01/01/10			FDOT DESIGN STANDARDS 2013	TYPICAL CCTV SITE	18101	1

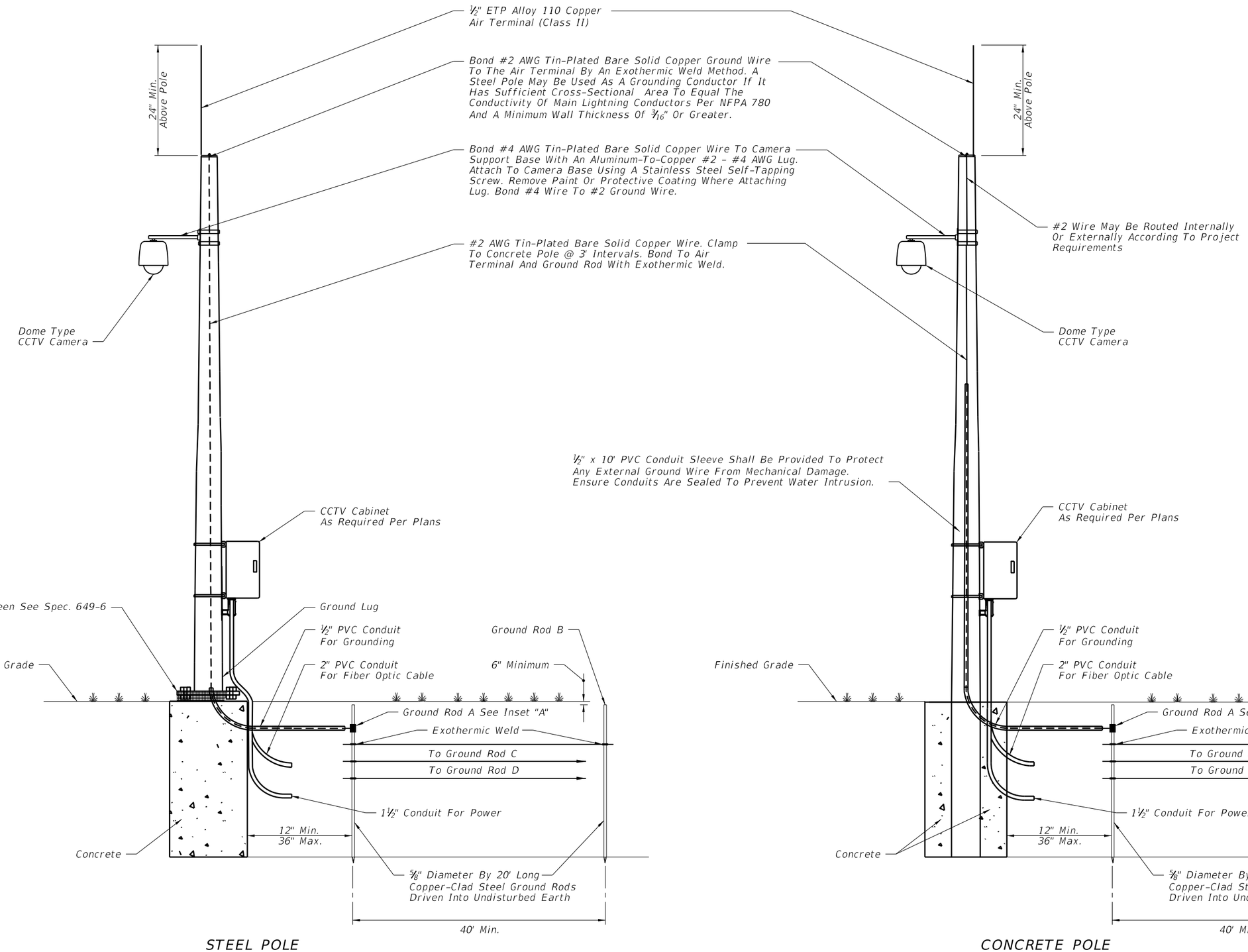

6/28/2012 2:21:06 PM rd960rh C:\d\projects\standards\tst\18000-s\18102-01.dgn

LAST REVISION	REVISION	DESCRIPTION:			INDEX NO.	SHEET NO.
01/01/10			FDOT DESIGN STANDARDS 2013	CCTV POLE GROUNDING	18102	1

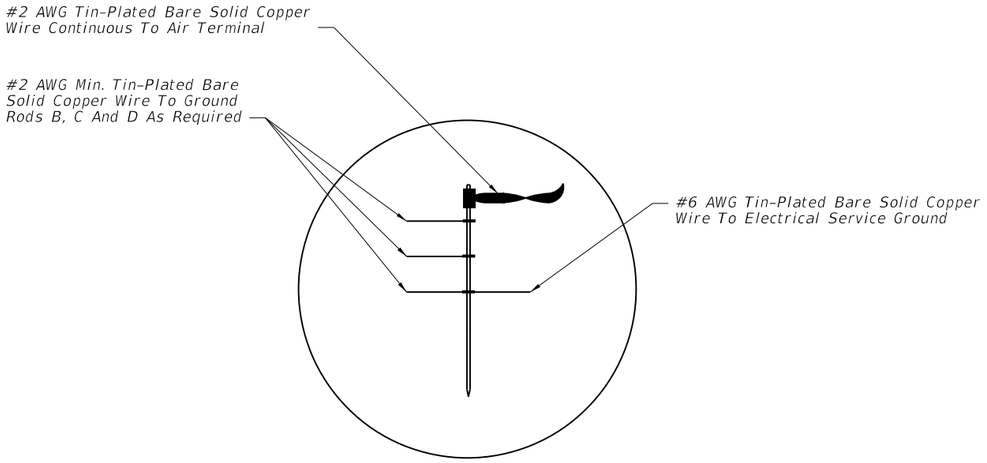

INSET "A"

GENERAL NOTES:

1. Distance must be in accordance with project design documents and greater than or equal to minimum clear zone requirements.
2. Exothermically weld all connections to ground rods.
3. Install marker tape directly above all grounding electrodes and conductors at a depth of 6".
4. All data, coaxial and power cables to the camera shall be completely concealed.
5. All air terminals must meet UL-96A.
6. Ground rod A is required. Ground rods B, C and D will be required as necessary to meet the ground resistance requirements in the contract documents.
7. Place ground system within right of way.
8. Route all camera cables inside arm of mounting bracket.
9. Main ground rod to be placed immediately adjacent to pole.

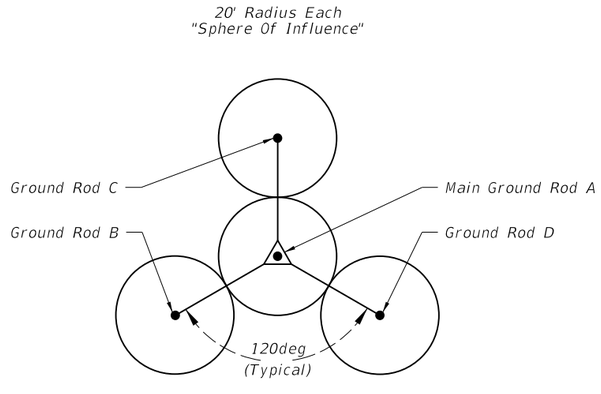

GROUND ROD PLACEMENT DETAIL

(Typical Each Pole)

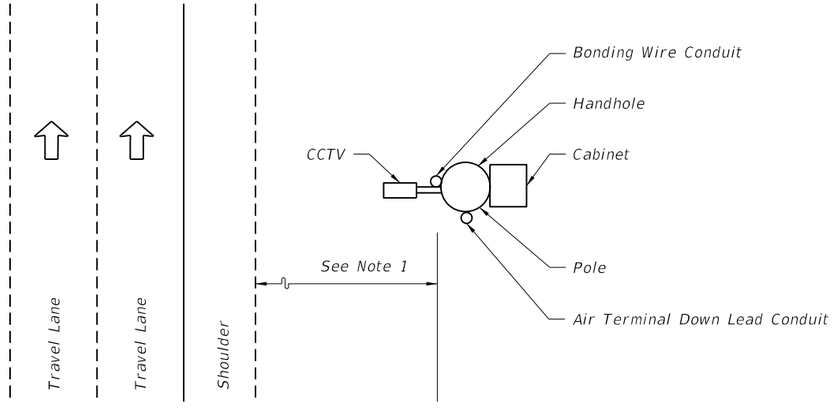

ORIENTATION OF CONDUITS AND DEVICES ON POLE

6/28/2012 2:21:08 PM rd960rh C:\d\projects\standards\its\18000-s\18102-02.dgn

LAST REVISION	REVISION	DESCRIPTION:		FDOT DESIGN STANDARDS 2013	CCTV POLE GROUNDING	INDEX NO.	SHEET NO.
07/01/07						18102	2

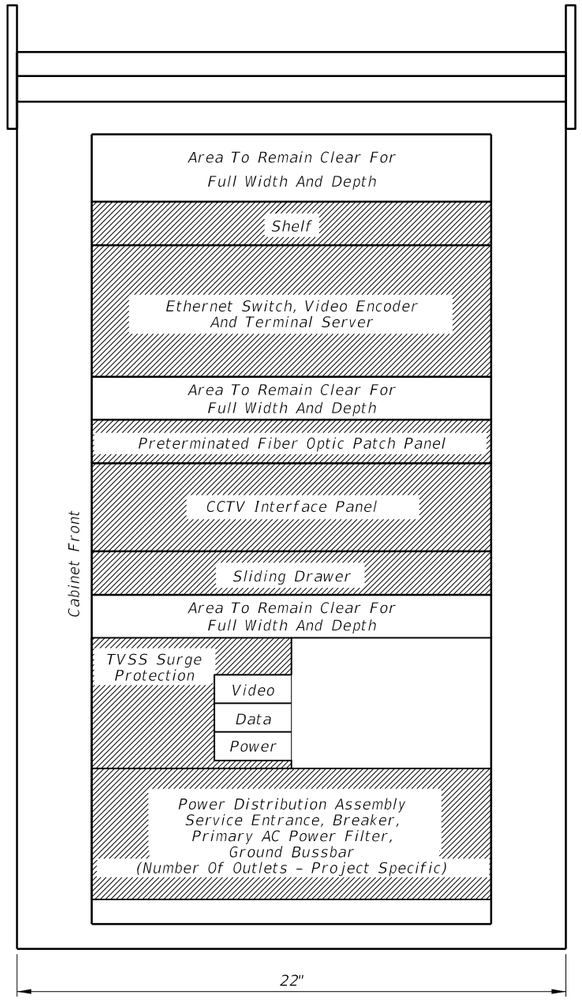

SIDE VIEW

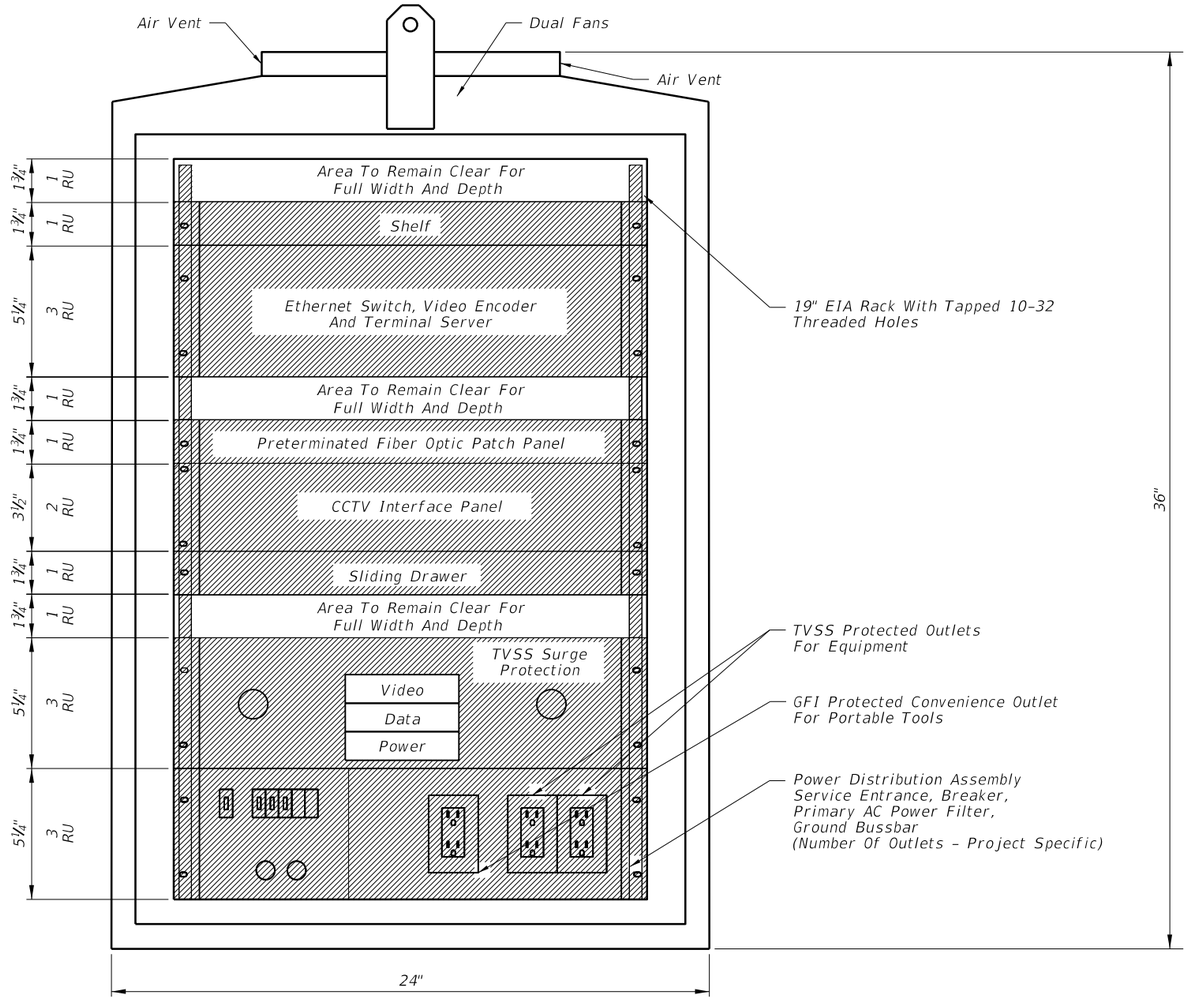

FRONT VIEW

GENERAL NOTES:

1. Cabinet layout is for pole or base mounted installations.
2. All dimensions and scale are approximate.
3. The minimum CCTV cabinet dimensions shall be 36"H X 24"W X 22"D.
4. Conduit entrances are in bottom of cabinet.
5. There shall be front and rear doors. Both doors shall have the hinged side next to the pole when pole mounted.
6. Cabinet layout represents preferred placement of typical devices. Project-specific designs may not include all components illustrated here.

C:\d\projects\standards\its\18000-s\18104-01.dgn
rd960rh
2:21:10 PM
6/28/2012

LAST REVISION	REVISION	DESCRIPTION:			INDEX NO.	SHEET NO.
07/01/07			FDOT DESIGN STANDARDS 2013	TYPICAL CCTV CABINET EQUIPMENT LAYOUT	18104	1

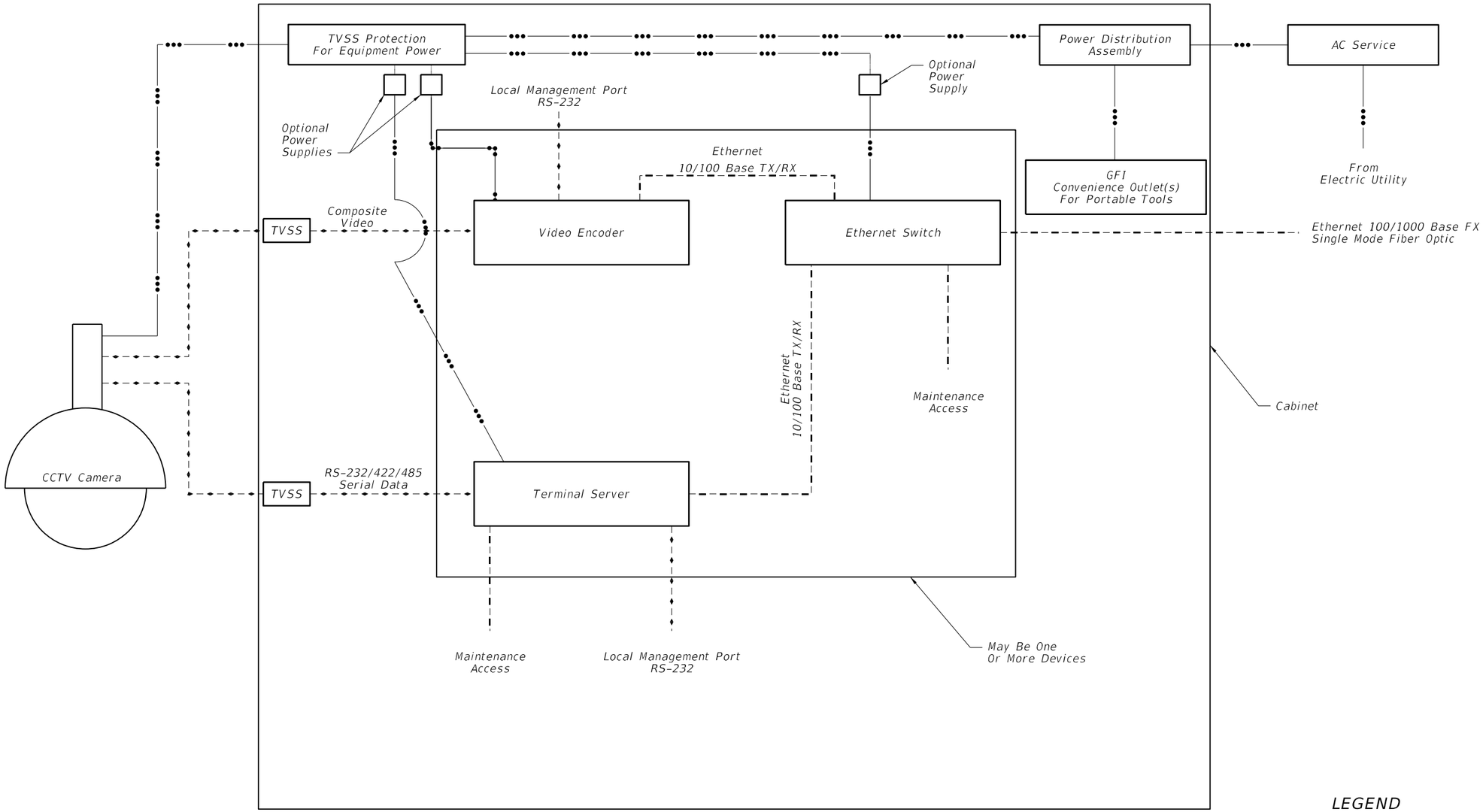

LEGEND

Data

Ethernet

Power

TVSS — Transient Voltage Surge Suppressor

LAST REVISION	REVISION	DESCRIPTION:				
07/01/07			FDOT DESIGN STANDARDS 2013	CCTV BLOCK DIAGRAM	INDEX NO. 18105	SHEET NO. 1

6/28/2012 2:21:12 PM rd960rh C:\d\projects\standards\its\18000-s\18105-01.dgn

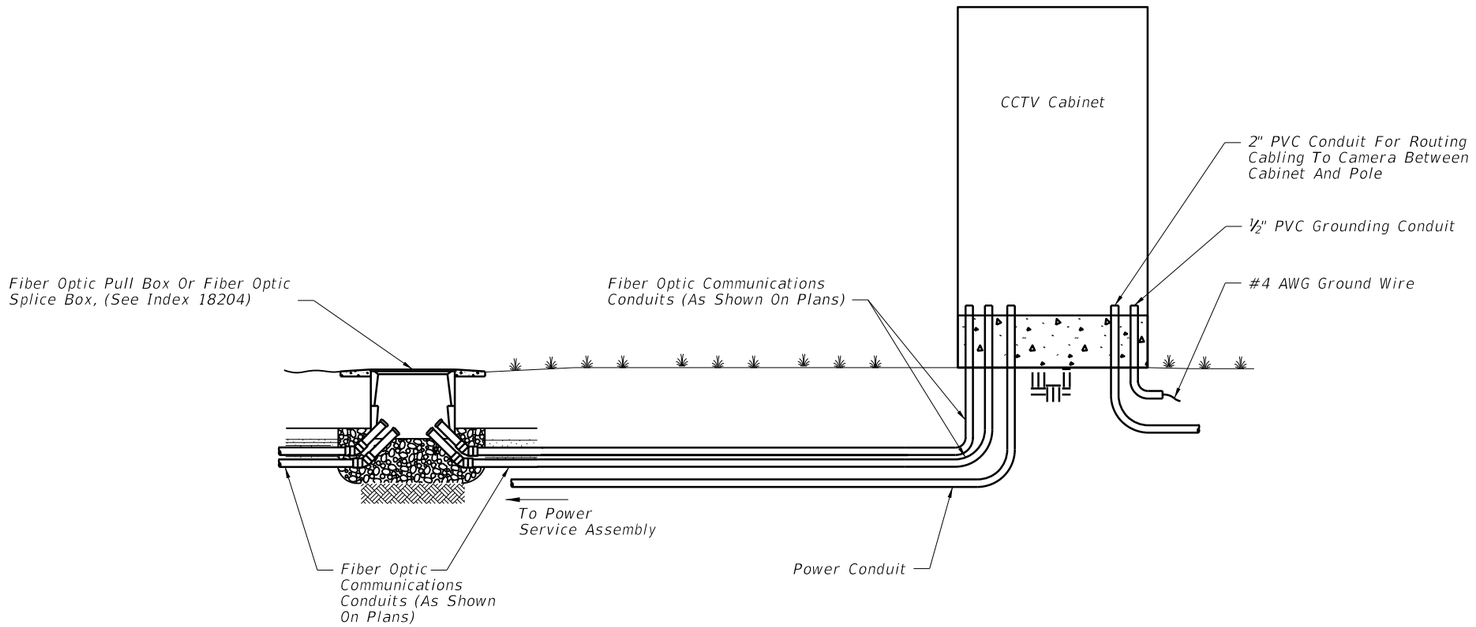

GENERAL NOTES:

1. Contractor shall splice fiber optic cables in cabinet to preterminater patch panel.
2. Furnish and install TVSS protection on all video, data, and power cabling in cabinet.
3. Ensure that all electronic equipment power is protected and conditioned with TVSS devices.
4. Sizes and types of conduits and innerducts for network communications between the pullbox and cabinet are stated in the contract documents.
5. See Index 18102 for grounding requirements.
6. All network communications conduits and ducts shall be sealed with approved waterproof duct plugs and seals.

C:\d\projects\standards\its\18000-s\18107-01.dgn
rd960rh
2:21:14 PM
6/28/2012

LAST REVISION	REVISION	DESCRIPTION:		FDOT DESIGN STANDARDS 2013	GROUND MOUNTED CCTV CABINET	INDEX NO.	SHEET NO.
07/01/07						18107	1

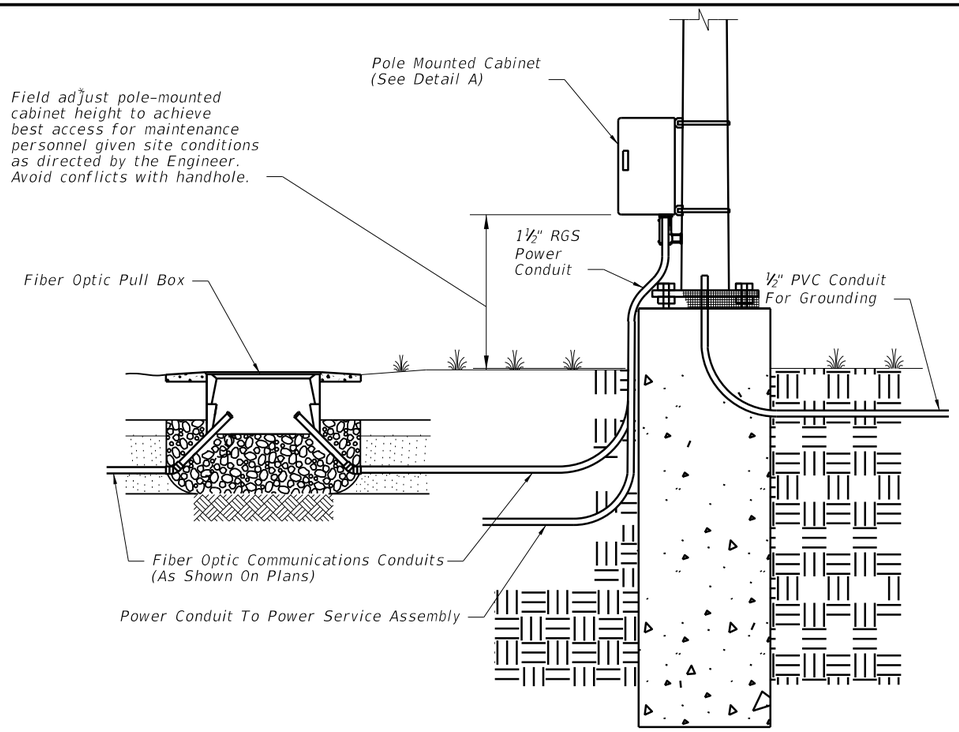

STEEL POLE

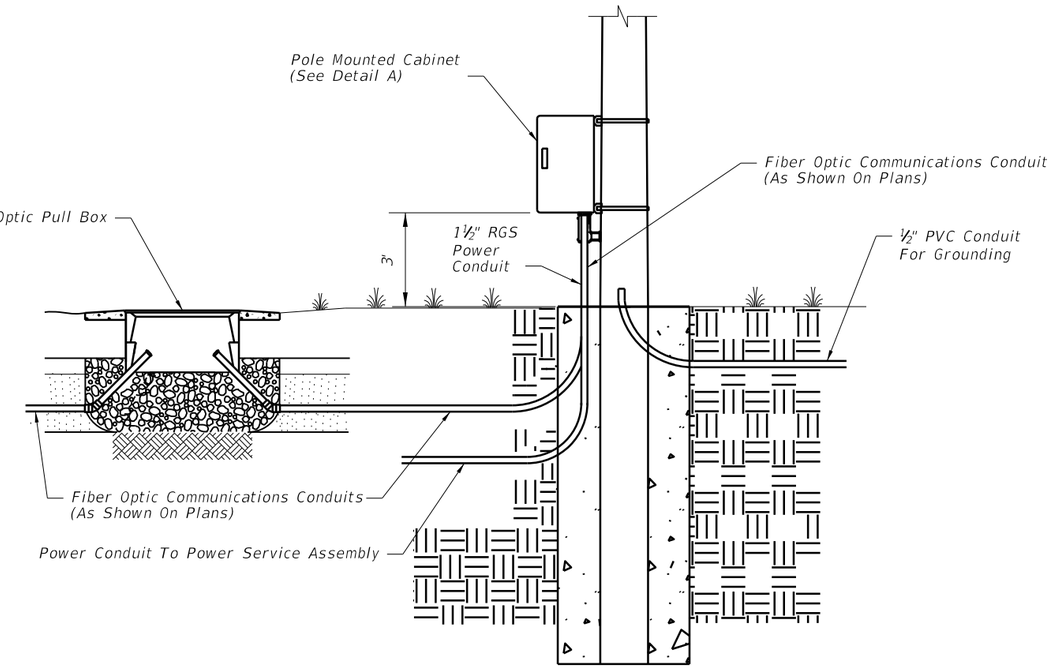

CONCRETE POLE

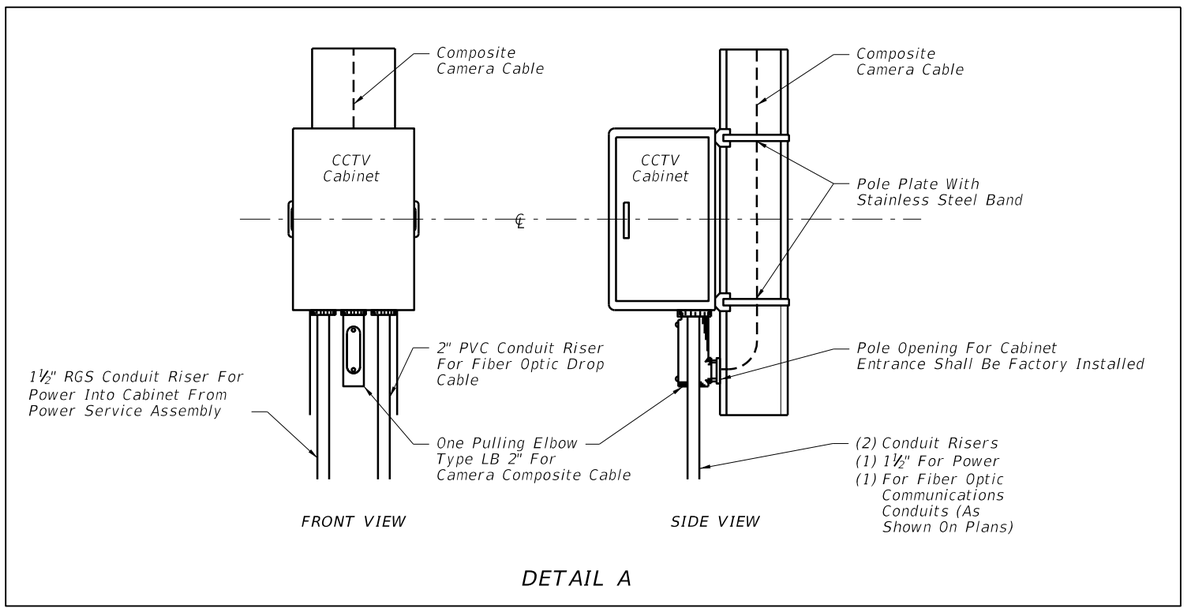

DETAIL A

GENERAL NOTES:

1. Contractor shall splice fiber optic cables in cabinet to preterminated patch panel.
2. Furnish and install TVSS protection on all cabling in cabinet.
3. Furnish and install secondary TVSS protection on outlets for equipment in cabinet.
4. Sizes and types of conduits and innerducts for network communications between the pull box and cabinet are stated in the contract documents.
5. Ensure that equipment cabinet is bonded to CCTV pole grounding system.
6. All network communications conduits and ducts shall be sealed with approved waterproof duct plugs and seals.
7. Pole mounted cabinets shall be mounted with hinges next to the pole.

C:\d\projects\standards\its\18000-s\18108-01.dgn rd960rh 2:21:16 PM 6/28/2012

LAST REVISION	REVISION	DESCRIPTION:		FDOT DESIGN STANDARDS 2013	POLE MOUNTED CCTV CABINET	INDEX NO.	SHEET NO.
07/01/07						18108	1

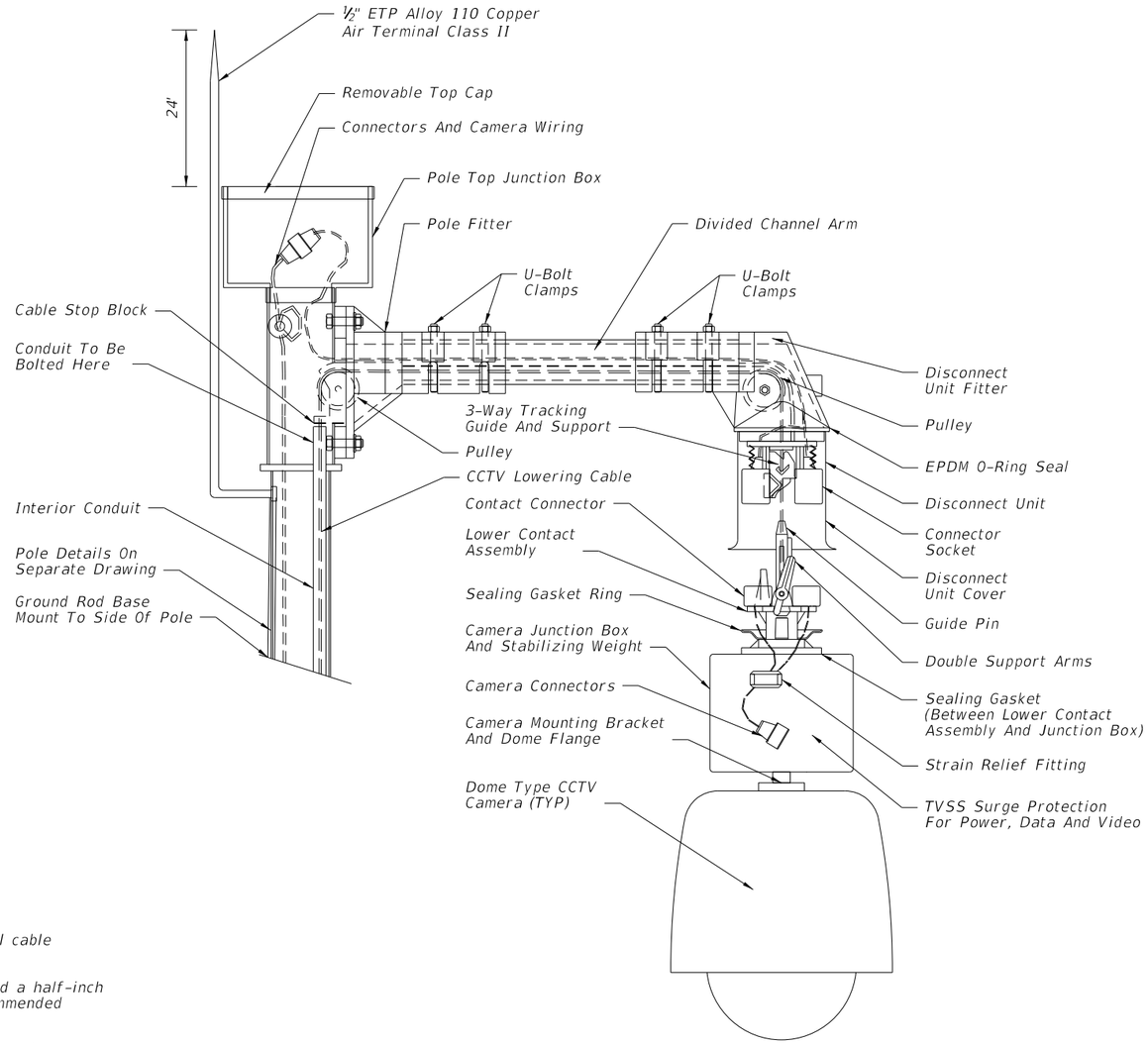

CAMERA LOWERING DEVICE DETAIL

GENERAL NOTES:

1. Lowering device to be shipped ready for pole attachment to include 100 ft. of composite power and signal cable prewired to lowering device at the factory.
2. The lowering device manufacturer shall supply both a portable lowering tool with a manual hand crank and a half-inch chuck variable-speed reversible industrial-duty electric drill that matches the winch's manufacturer-recommended revolutions per minute. One lowering tool per every 10 lowering devices is required.
3. The lowering device manufacturer shall provide an on-site installation inspection and operator instruction and certification. This ensures the product is assembled correctly and that all necessary persons are trained in the proper, safe operation of the system. Before erecting the first pole the contractor must contact the lowering device supplier and schedule a manufacturer's representative to be on-site.
4. Design camera mounting arm and connection to tenon according to FDOT Structures Manual (current edition).
5. Camera to be mounted to camera junction box and stabilizing weight via 1½" Standard NPT Pipe Thread.
6. Use air terminal extension when the pole top junction box is wider than top of pole.
7. The stainless steel device lowering cable shall be installed inside the pole within a 1 ¼" diameter PVC conduit.
8. All communication and power cables must be neatly bundled and secured.
9. Use a Camera Lowering Device listed on the Approved Product List (APL).
10. See Index 18113 for concrete pole details and Index 18111 for steel pole details.

CAMERA MOUNTING WITH LOWERING DEVICE

C:\d\projects\standards\its\18000-s\18110-01.dgn
rd960rh
2:21:18 PM
6/28/2012

LAST REVISION	REVISION	DESCRIPTION:			INDEX NO.	SHEET NO.
01/01/10			FDOT DESIGN STANDARDS 2013	CAMERA MOUNTING DETAILS	18110	1

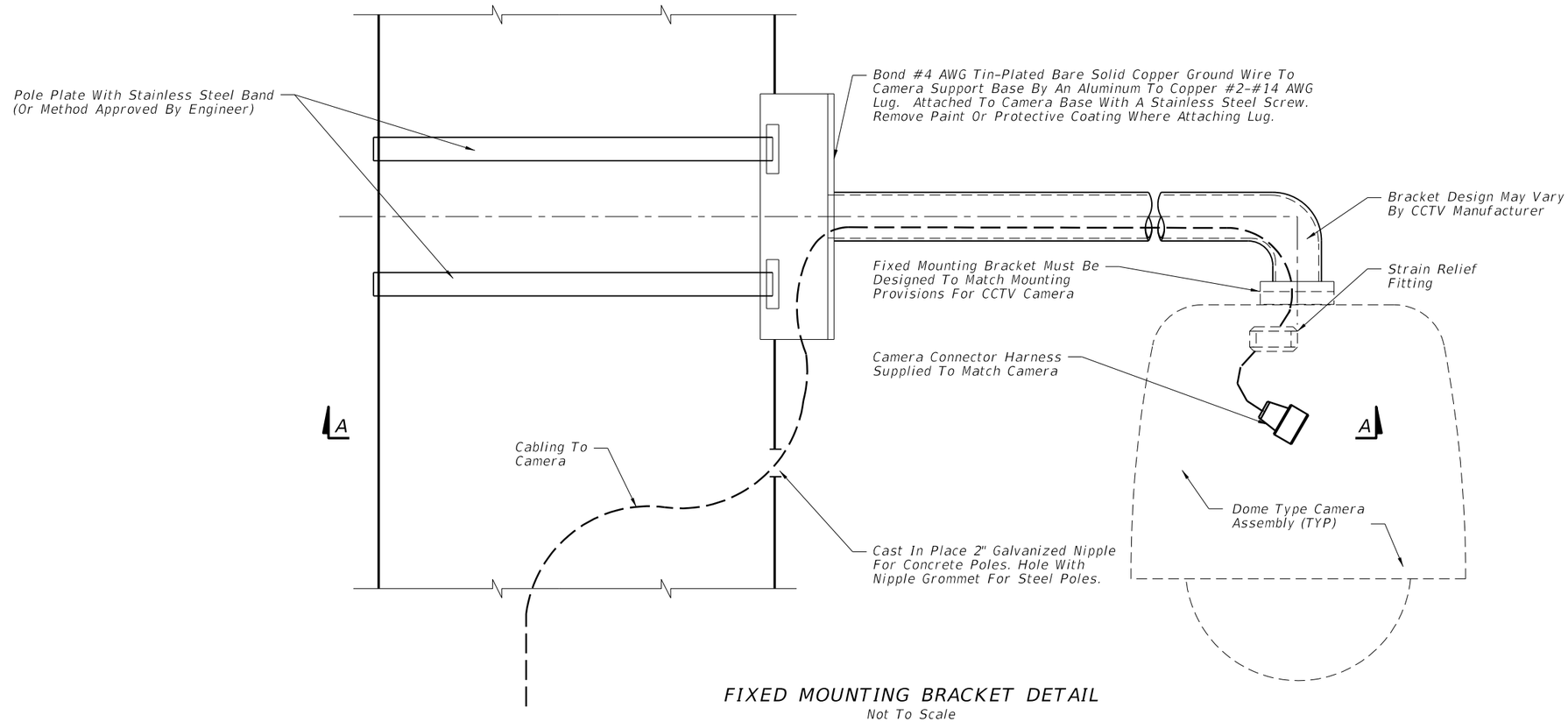

FIXED MOUNTING BRACKET DETAIL

Not To Scale

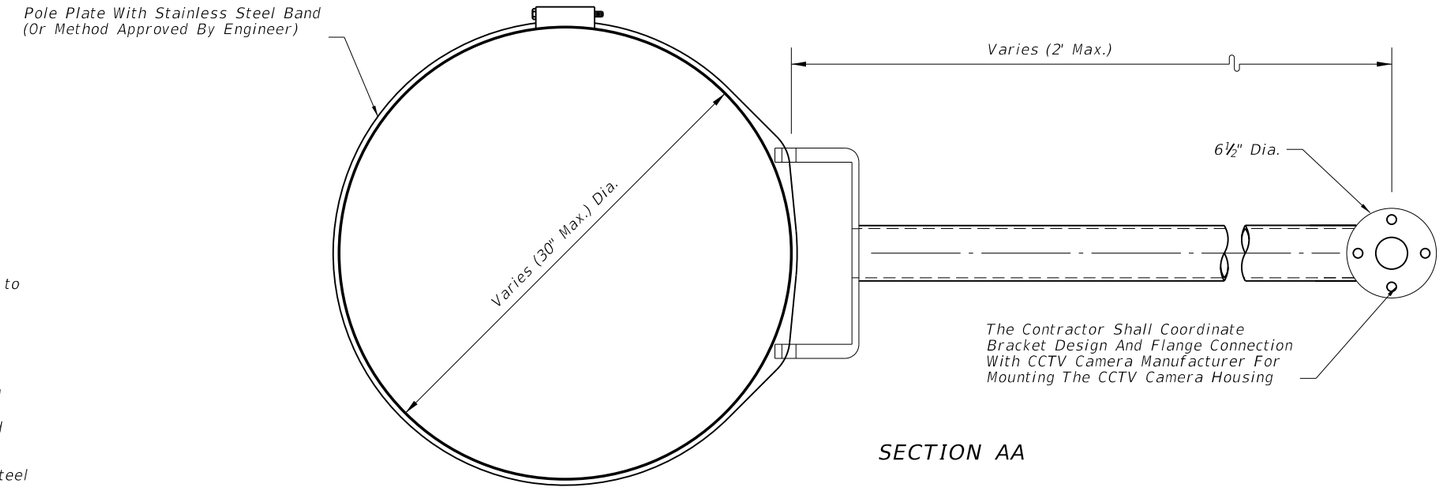

SECTION AA

GENERAL NOTES:

1. Verify the pole type, the dimensions of the pole at the point of installation of the camera mount, and angle with respect to the roadway before manufacturing camera mount assembly.
2. Design camera mounting arm and connection to the pole according to FDOT Structures Manual (current edition).
3. No field welding shall be permitted.
4. Mounting bracket arm shall be level after installation.
5. The contractor shall submit shop drawings for the proposed fixed mounting arm, signed and sealed by a Professional Engineer registered in the State of Florida, to the Engineer for review and approval.
6. See Index 18113 for concrete pole details and Index 18111 for steel pole details.
7. Galvanized pipe connections and conduit entry points shall be sealed in accordance with Section 630 of the Standard Specifications.

CAMERA MOUNTING WITH FIXED BRACKET

C:\d\projects\Standards\its\18000-s\18110-02.dgn
rd960rh
2:21:20 PM
6/28/2012

LAST REVISION	REVISION	DESCRIPTION:			INDEX NO.	SHEET NO.
01/01/10			FDOT DESIGN STANDARDS 2013	CAMERA MOUNTING DETAILS	18110	2

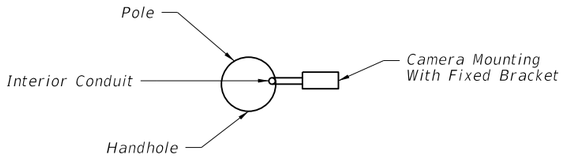

ORIENTATION VIEW

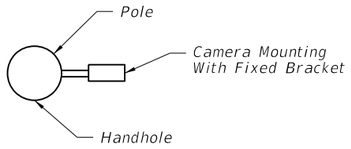

ORIENTATION VIEW

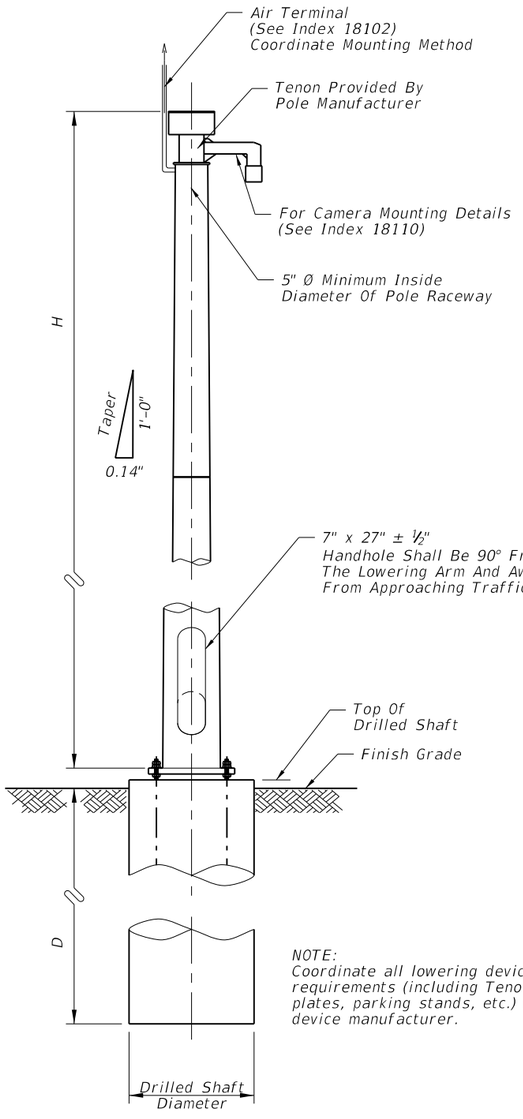

NOTE:
Coordinate all lowering device hardware requirements (including Tenon, Tenon mounting plates, parking stands, etc.) with lowering device manufacturer.

WITH LOWERING DEVICE

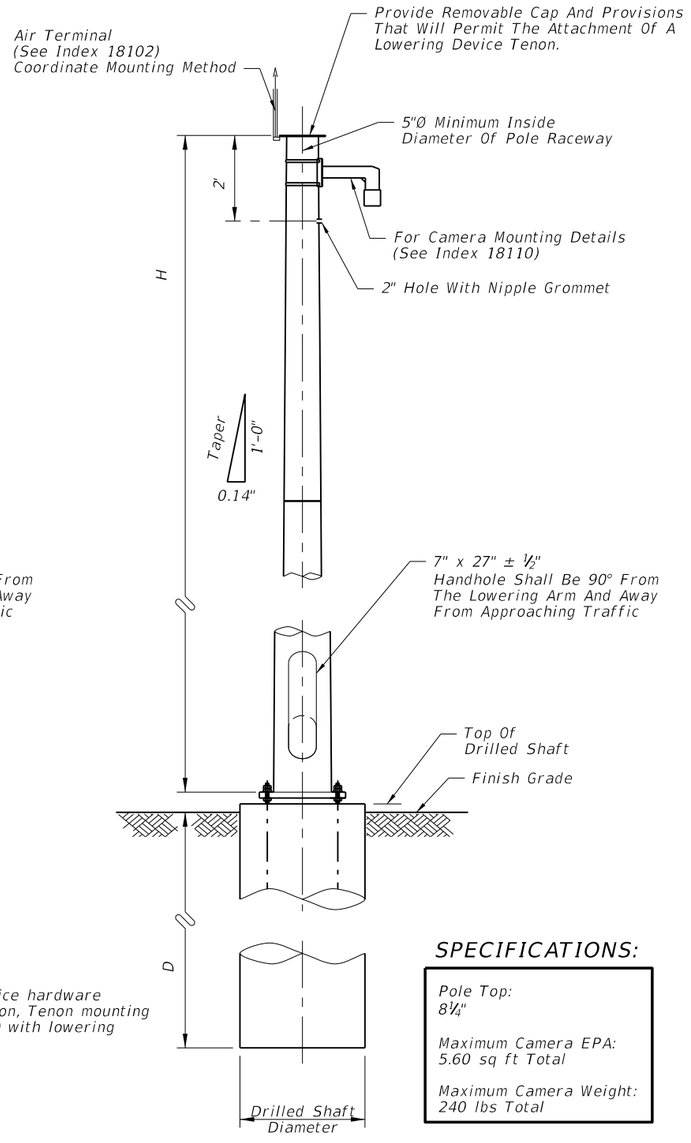

WITHOUT LOWERING DEVICE

SPECIFICATIONS:

Pole Top:
8¼"

Maximum Camera EPA:
5.60 sq ft Total

Maximum Camera Weight:
240 lbs Total

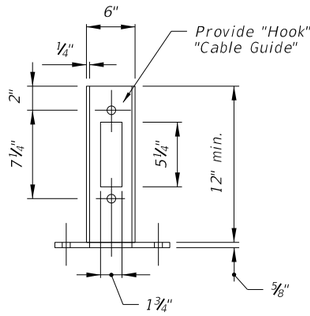

TENON DETAIL

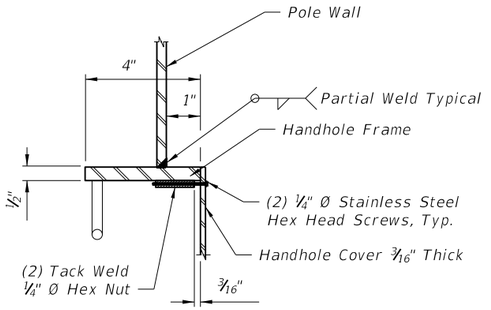

SECTION A-A

H (ft)	D (ft)	Drilled Shaft Diameter (ft)
50	9	4.0
55	9	4.0
60	10	4.0
65	11	4.5
70	11	4.5

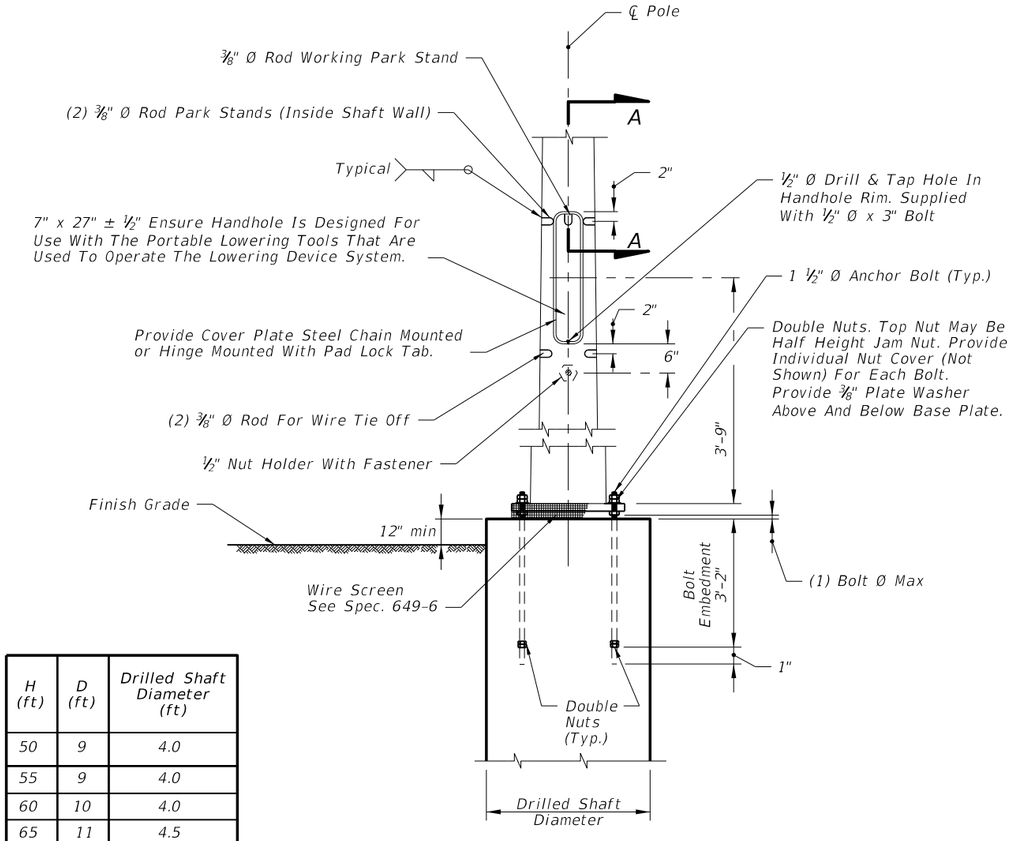

FOUNDATION AND HANDHOLE DETAIL

LAST REVISION	REVISION	DESCRIPTION:		FDOT DESIGN STANDARDS 2013	STEEL CCTV POLE	INDEX NO.	SHEET NO.
01/01/11						18111	1

C:\d\projects\standards\tis\18000-s\18111-01.dgn rd960rh 2:21:22 PM 6/28/2012

DESIGN NOTES:

Design according to FDOT Structures Manual.

Maximum 1" deflection in 40mph wind (3 second gust).

Perform all welding in accordance with the American Welding Society Structural Welding Code (Steel) ANSI/AWS D1.1 (current edition).

Foundation materials:

Reinforcing Steel: ASTM A615 Grade 60

Concrete: Class IV (Drilled Shaft) with a minimum 4,000 psi compressive strength at 28 days for all environment classifications.

Anchor Bolts: ASTM F1554 Grade 55 with ASTM A563 Grade A heavy-hex nuts.
- ASTM F436 Type 1 washers.
- ASTM F2329 galvanization.

Foundation design based upon the following soil criteria:

Classification	=	Cohesionless (Fine Sand)
Friction Angle	=	30 Degrees (30°)
Unit Weight	=	50 lbs./cu. Ft. (assumed saturated)

Only in cases where the Designer considers the soil types at the specific site location to be of lesser strength properties should an analysis be required.

Auger borings, SPT borings or CPT soundings may be utilized as needed to verify the assumed soil properties, and at relatively uniform sites, a single boring or sounding may cover several foundations. Furthermore, borings in the area that were performed for other purposes may be used to confirm the assumed soil properties.

POLE GENERAL NOTES:

16 sided or more or round.

Tapered 0.14 inches per foot.

Transverse welds only allowed at the base.

One or Two sections (with telescopic field splice) is allowed.

No laminated tubes.

Up to two longitudinal seam welds are permitted.

Longitudinal seam welds within 6" of circumferential welds shall be complete penetration welds. Longitudinal seam welds at telescopic field splices shall be complete penetration welds for the splice length plus six inches. All other areas, size the partial penetration welds to at least 60% of the pole tube thickness.

Identification tag:

- Aluminum, secured to pole with stainless steel screws.
- Locate inside pole and visible from handhole.
- Provide Financial Project ID, pole height, manufacturer's name, pole base (Fy of steel) and pole base wall thickness.

Perform all welding in accordance with the American Welding Society Structural Welding Code (Steel) ANSI/AWS D1.1 (current edition).

Refer to Index No. 18108 for conduit and cabinet mounting details.

Provide fourteen #11 longitudinal bars for 4'-0" diameter drilled shafts and sixteen #11 longitudinal bars for 4'-6" diameter drilled shafts. Provide seven #5 stirrups spaced at 4" from the top of the drilled shaft and #5 stirrups spaced at 1'-6" (max.) for the rest of drilled shaft. Provide 4" cover for the top of drilled shaft and 6" cover for sides and bottom. Coordinate anchor bolt design with the shaft reinforcement and CSL tube details.

INSTALLATION NOTES:

Cable Supports: Electrical Cable Guides and Eyebolts.

Locate top and bottom electrical guides within the pole aligned with each other.

Position one cable guide 2" below the handhole.

Position other cable guide 1" directly below the top of the tenon.

Position eyebolt 2-3/4" below the top of the handhole.

Install pole plumb.

Lowering Device Installation Notes:

Design tenon dimensions to facilitate lowering device component installation. Locate slots parallel to the pole centerline for mounting the lowering device. Bolt a tenon to the pole top with mounting holes and slot as required for the mounting of the lowering device.

Place the lowering cable that moves within the pole in an interior conduit to prevent it from tangling or interfering with any electrical wire that is in the pole. Ensure that any electrical wire within the pole is routed securely and free from slack.

Mount lowering arm perpendicular to the roadway or as shown in the plans. Position CCTV pole so that the camera can be safely lowered without requiring lane closures.

POLE SPECIFICATIONS:

ASTM A1011 Grade 50, 55, 60 or 65 (less than 1/4")or

ASTM A572 Grade 50, 60 or 65 (greater than 1/4")or

ASTM A595 Grade A (55 ksi yield) or Grade B (60 ksi yield).

Steel Plates and Pole Cap: ASTM A36.

Weld Metal: E70XX.

Bolts: ASTM A325, Type 1.

Handhole frame: ASTM A709 Grade 36 or ASTM A36.

Handhole cover: ASTM A1011 Grade 50, 55, 60 or 65.

Stainless steel screws: AISI Type 316.

Galvanization:
- Nuts, bolts and washers: ASTM F2329.
- All other steel: ASTM A123.

One hundred percent of full-penetration groove welds and a random 25% of partial penetration groove welds shall be inspected. Full-penetration groove weld inspection shall be performed by nondestructive methods of radiography or ultrasonics.

6/28/2012 2:21:24 PM rd960rh C:\d\projects\Standards\tls\18000-s\18111-02.dgn

LAST REVISION	REVISION	DESCRIPTION:				
01/01/12			FDOT DESIGN STANDARDS 2013	STEEL CCTV POLE	INDEX NO. 18111	SHEET NO. 2

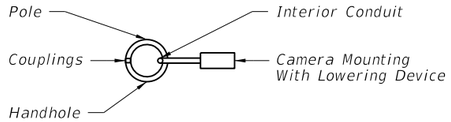

ORIENTATION VIEW

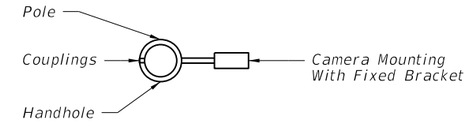

ORIENTATION VIEW

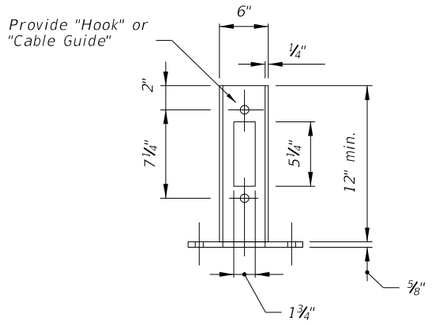

TENON DETAIL

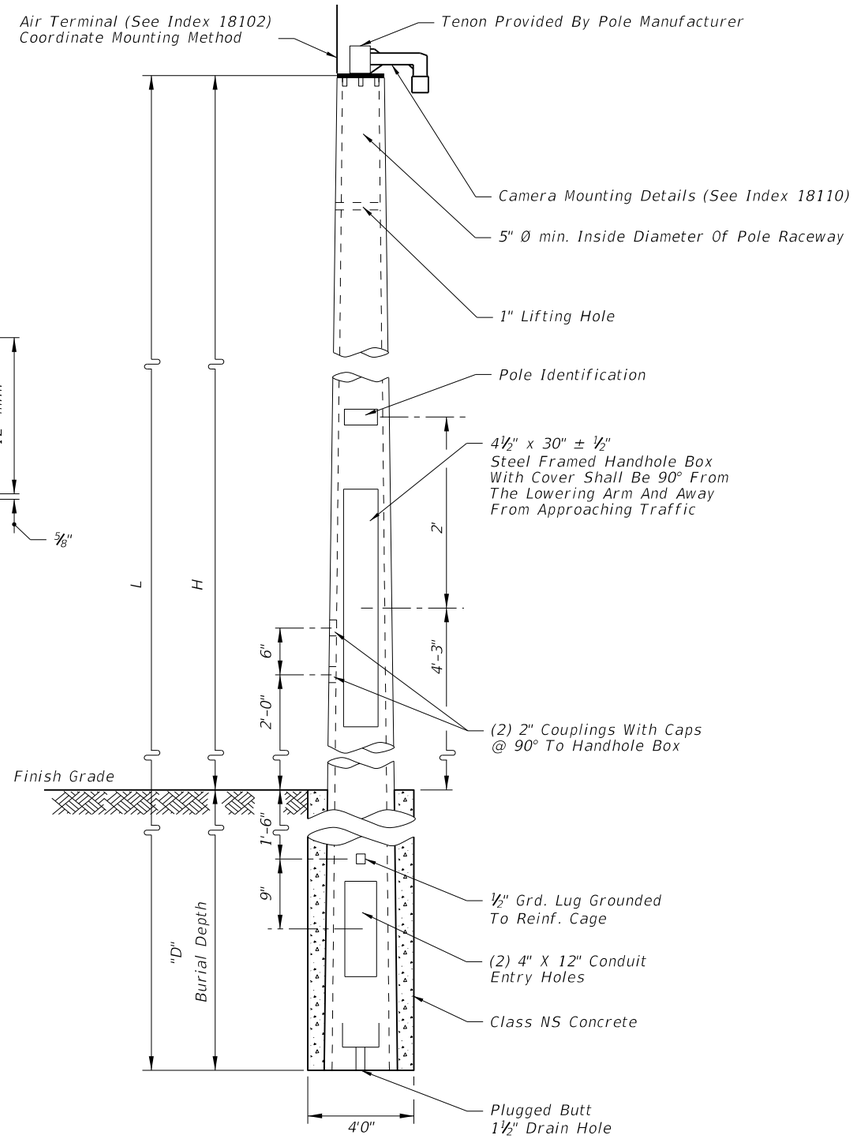

WITH LOWERING DEVICE

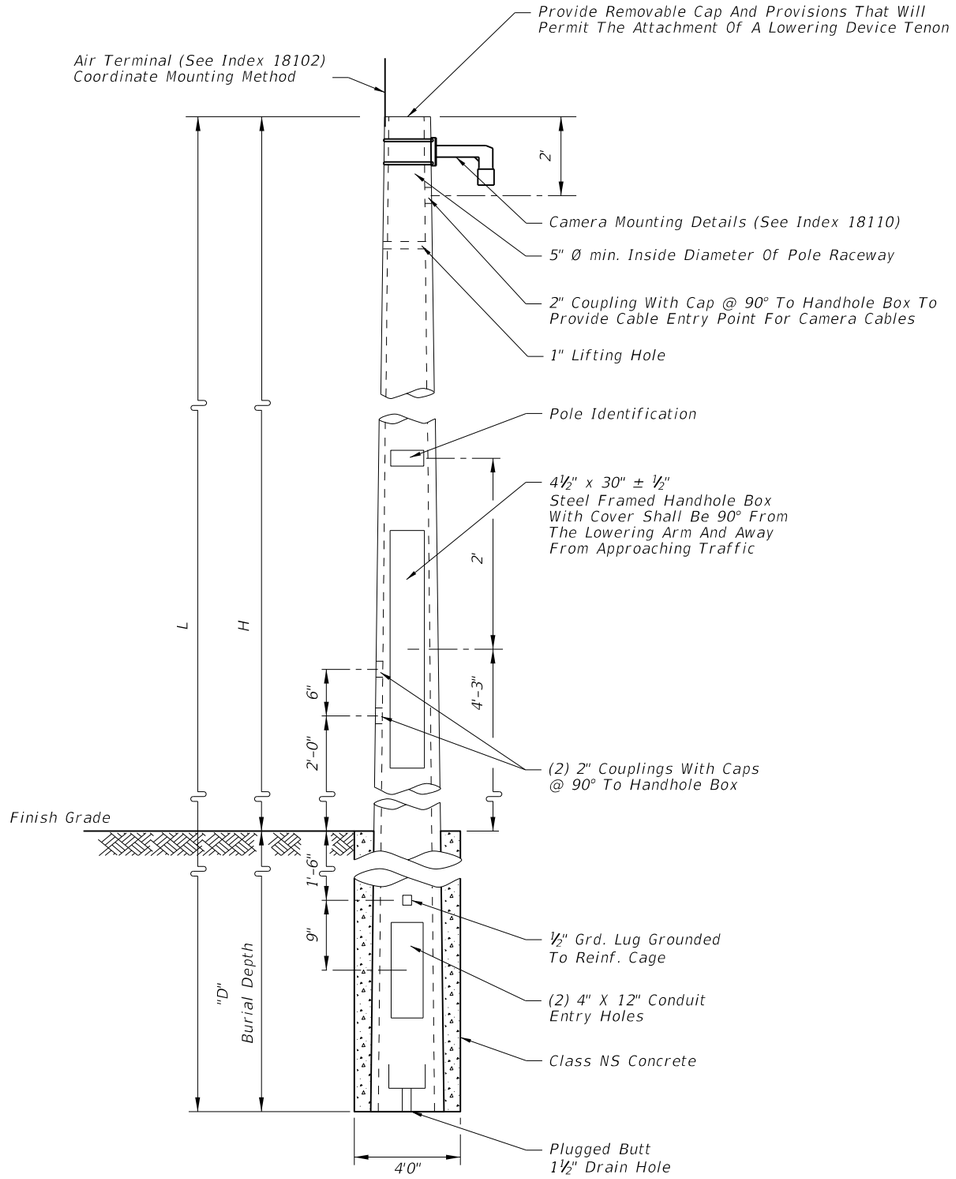

WITHOUT LOWERING DEVICE

NOTE:
Coordinate all lowering device hardware requirements (including Tenon, Tenon mounting plates, parking stand, etc.) with lowering device manufacturer.

C:\d\projects\standards\its\18000-s\18113-01.dgn rd960rh 2:21:26 PM 6/28/2012

LAST REVISION	REVISION	DESCRIPTION:			INDEX NO.	SHEET NO.
01/01/11			FDOT DESIGN STANDARDS 2013	CONCRETE CCTV POLE	18113	1

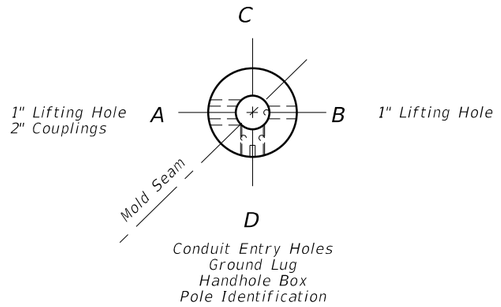

TOP VIEW

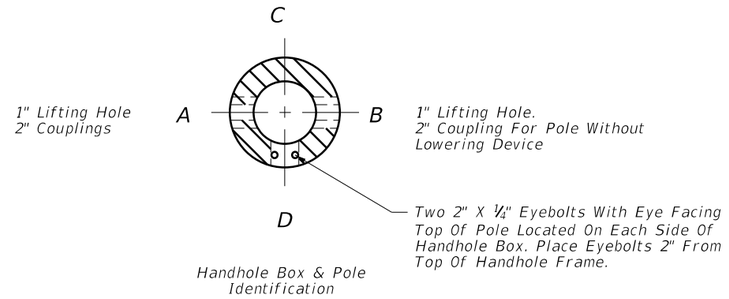

SECTIONAL VIEW THROUGH HAND HOLE BOX

GENERAL NOTES:

Design according to FDOT Structures Manual current edition.

Manufacturers seeking approval for inclusion on the Qualified Products List must submit a QPL Product Evaluation Application along with design documentation and drawings showing the product meets all specified requirements of this Standard. Provide documentation that certifies and demonstrates that the pole is designed to accommodate and be compatible with a lowering device listed on the Approved Product List.

Place prestressing symmetrically about both axis.

Use Class V Special Concrete or Class VI Concrete with 4 ksi minimum strength at transfer.

Use ASTM A615 Grade 60 reinforcing steel. Provide a minimum of non-prestressed reinforcement equal to 0.33% of the concrete area.

Use ASTM A416 Grade 270 stress relieved or low-lax prestressing strands.

One turn required for spiral splices and two turns required at the top and bottom of poles. Manufacture spirals from cold-drawn ASTM A82 steel wire.

Identify poles as to manufacturer, pole length, certification number and QPL qualification number by inset numerals 1" in height inscribed on the same face of the pole as the handhole and ground wire.

Provide a Class 3 surface finish.

Provide a 1" minimum cover.

Foundation design based upon the following soil criteria:

Classification	=	Cohesionless (Fine Sand)
Friction Angle	=	30 Degrees (30°)
Unit Weight	=	50 lbs./cu. Ft. (assumed saturated)

Only in cases where the Designer considers the soil types at the specific site location to be of lesser strength properties should an analysis be required. Auger borings, SPT borings or CPT soundings may be utilized as needed to verify the assumed soil properties, and at relatively uniform sites, a single boring or sounding may cover several foundations. Furthermore, borings in the area that were performed for other purposes may be used to confirm the assumed soil properties.

SPECIFICATIONS:

Pole Top:	10 1/2" Diameter minimum
Pole Taper:	0.2 in/ft nominal
Defl Spec:	1" max. In 40 mph Wind (3 second gust)
Max. Camera EPA:	5.60 sq. ft Total
Max. Camera Wgt:	240 lbs Total

LOWERING DEVICE INSTALLATION NOTES:

Design tenon dimensions to facilitate lowering device component installation. Locate slots parallel to the pole centerline for mounting the lowering device. Bolt a tenon to the pole top with mounting holes and slot as required for the mounting of the lowering device.

Place the lowering cable that moves within the pole in an interior conduit to prevent it from tangling or interfering with any electrical wire that is in the pole. Ensure that any electrical wire within the pole is routed securely and free from slack.

Mount lowering arm perpendicular to the roadway or as shown in the plans. Position CCTV pole so that the camera can be safely lowered without requiring lane closures.

L (ft)	H (ft)	D (ft)
63	50	13
69	55	14
75	60	15
80	65	15
86	70	16

6/28/2012 2:21:28 PM rd960rh C:\d\projects\standards\tfs\18000-s\18113-02.dgn

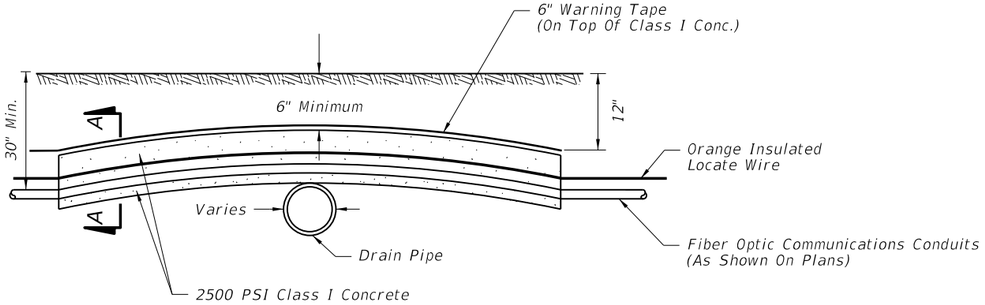

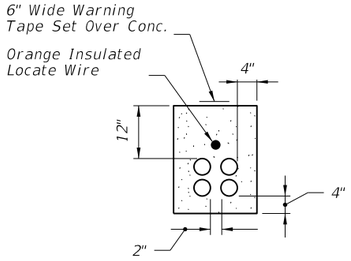

SECTION AA

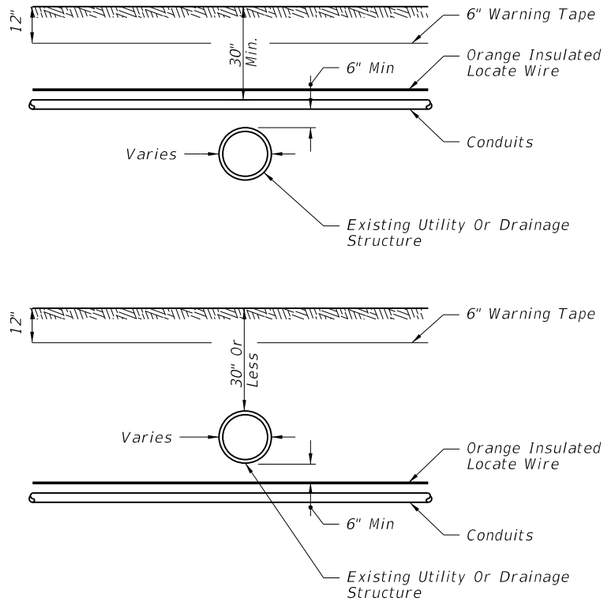

CONDUIT INSTALLATION DETAILS ACROSS EXISTING DRAIN PIPES OR UTILITIES

GENERAL NOTES:

1. The contractor, with approval from the Engineer, may adjust the final burial depth of the conduit(s) in order to transverse nonmovable object conflicts.
2. Backfill with excavated material and compact the soil until firm and unyielding. Remove rock and debris from backfill material.
3. Where conduits are to be installed over existing underground structures (e.g., drain pipes or utility lines) which are less than 30" deep, the contractor shall encase the conduit in 2500 PSI Class I concrete for the entire length of conduit that is installed at a depth of less than 30".
4. If the amount of cover over the encasement is less than 6", the contractor shall install the conduit to pass below the underground structures (e.g., drain pipes).
5. Size and type of fiber optic conduits shall be shown on plans.

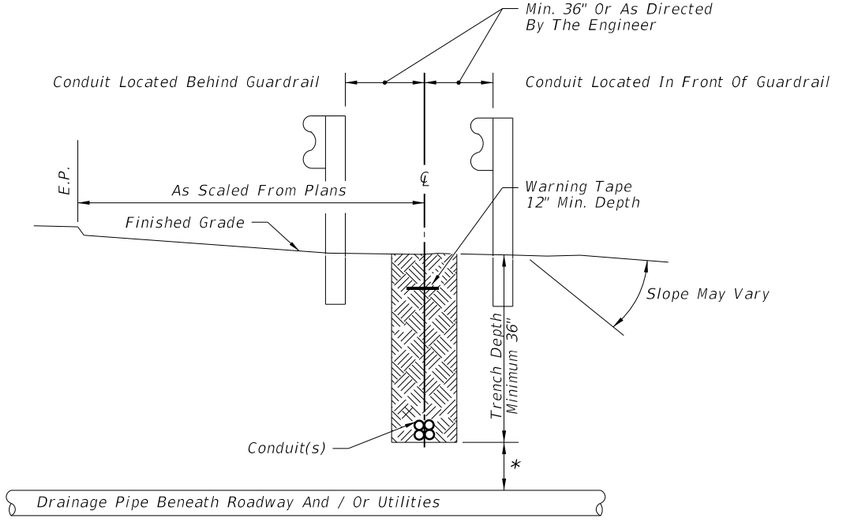

* Maintain 12" Minimum Vertical Clearance When Crossing Over Pipe And / Or Utilities. If Minimum Vertical Clearance Cannot Be Maintained, Then Conduit Is To Be Routed Under Pipe Maintaining 12" Minimum Vertical Clearance.

CONDUIT INSTALLATION TYPICAL DETAIL

6/28/2012 2:21:30 PM rd960rh C:\d\projects\standards\its\18000-s\18202-01.dgn

LAST REVISION	REVISION	DESCRIPTION:				
01/01/12			FDOT DESIGN STANDARDS 2013	FIBER OPTIC TRENCH DETAILS	INDEX NO. 18202	SHEET NO. 1

GENERAL NOTES:

1. If no guardrail or barrier wall exists, structure shall be outside the clear zone. Clear zone shall be measured to edge of the drilled shaft if drilled shaft is more than 4" above adjacent grade.
2. Extend Catwalk from DMS to outer edge of paved shoulder but not less than four feet in length.
3. Clear zone distance and setbacks from edge of travel lane shall be in accordance with Plans Preparation Manual Volume I, Chapters 2 and 4.

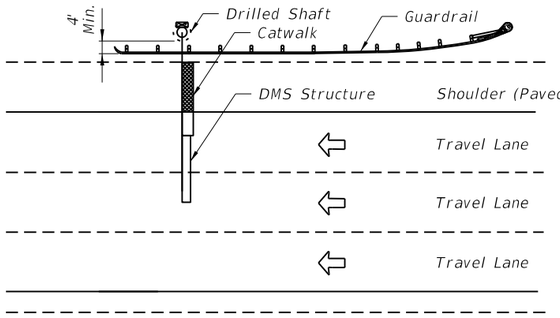

Note: Actual number and direction of travel lanes varies.

TYPICAL PLAN VIEW
DMS CANTILEVER SIGN STRUCTURE

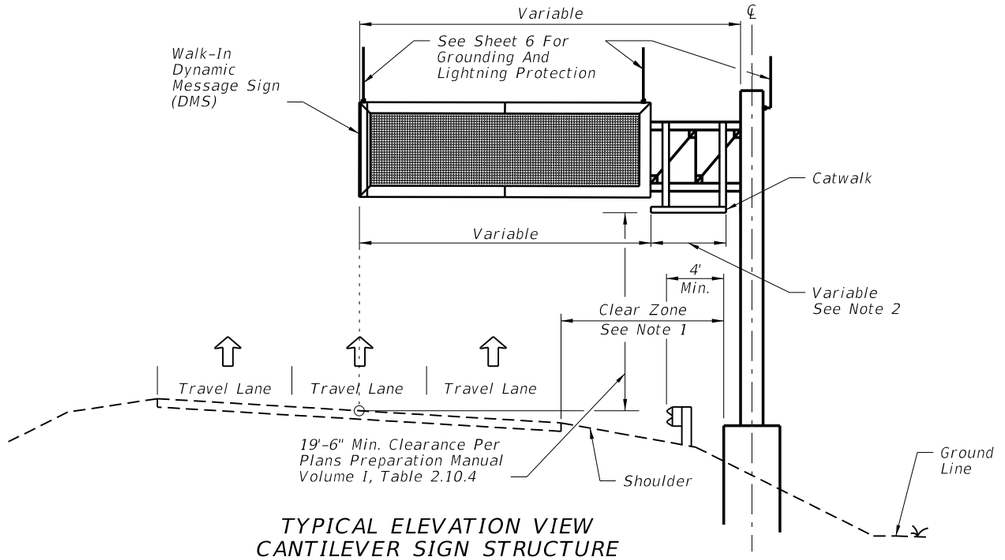

TYPICAL ELEVATION VIEW
CANTILEVER SIGN STRUCTURE

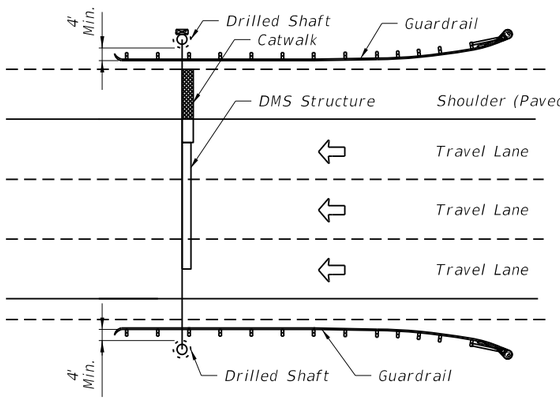

Note: Actual number and direction of travel lanes varies.

TYPICAL PLAN VIEW
SPAN SIGN STRUCTURE

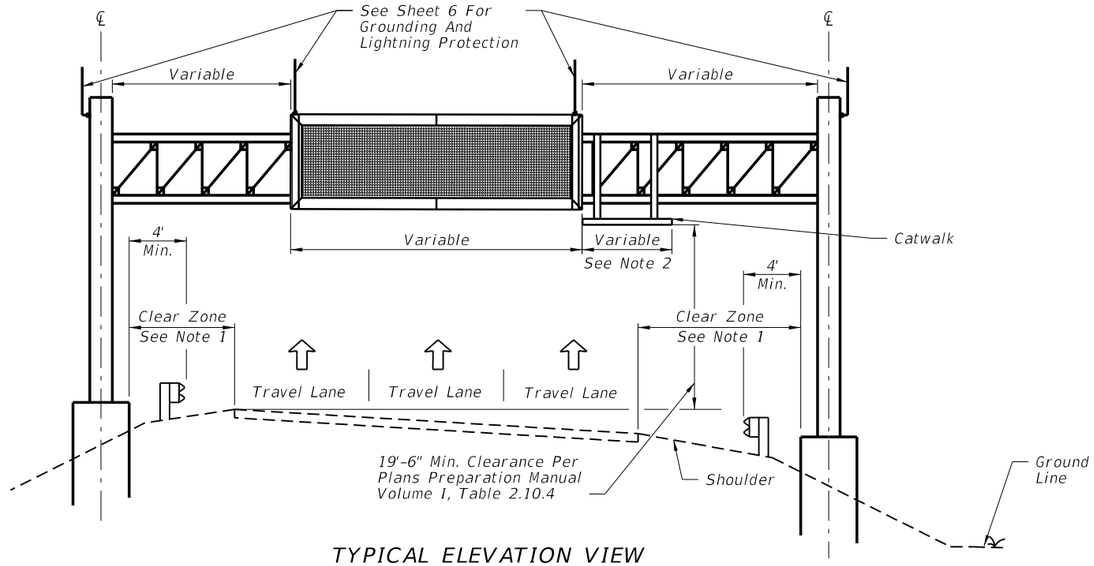

TYPICAL ELEVATION VIEW
SPAN SIGN STRUCTURE

GENERAL LAYOUT

C:\d\projects\standards\its\18000-s\18300-01.dgn
rd960rh
2:21:32 PM
6/28/2012

LAST REVISION	REVISION	DESCRIPTION:		FDOT DESIGN STANDARDS 2013	DYNAMIC MESSAGE SIGN WALK-IN	INDEX NO.	SHEET NO.
01/01/12						18300	1

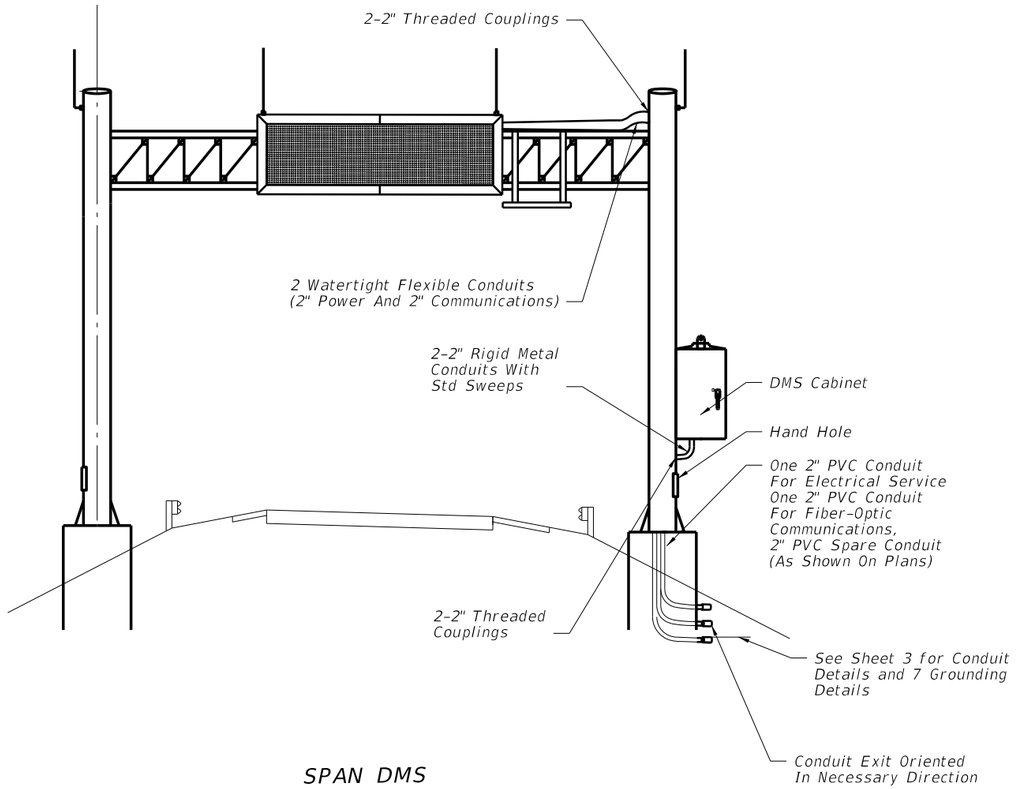

SPAN DMS

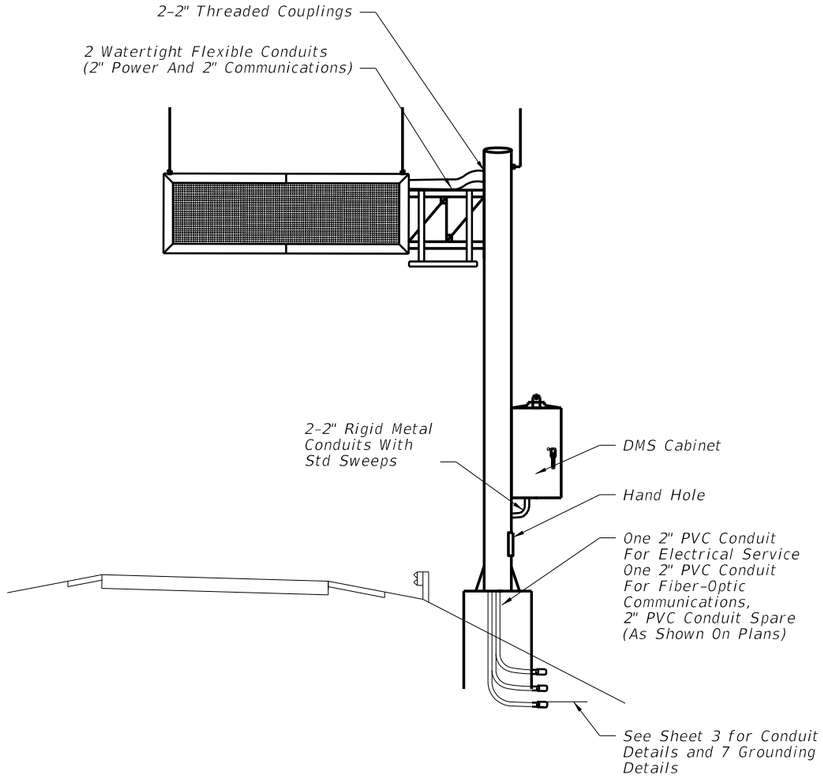

CANTILEVER DMS

GENERAL NOTES:

1. Conductors for grounding shall be connected to steel framework that have been cleaned to base metal, by use of bonding plates having contact area of not less than 8 square inches or by welding or brazing. Drilling and tapping the steel structure to accept a threaded connector is also an acceptable method.
2. If steel framework is to be drilled and tapped to accept threaded connector, the threaded connector shall have at least 5 threads fully engaged and secured with a jam nut to the steel framework.
3. Bends in the conduit shall not be less than the minimum bending radius for the cable contained in the conduit.
4. Catwalk and handrail design and installation shall comply with AISC, AASHTO, and OSHA requirements as applicable.
5. All data, fiber-optic and power cable for the DMS shall be completely encased within the sign structure or in conduit.
6. Permanently stamp/mark foundation to conduit locations.
7. Transition conduit in foundation to underground conduit with appropriate reducer outside the limits of the foundation.

C:\d\projects\standards\tis\18000-s\18300-02.dgn
rd960rh
2:21:34 PM
6/28/2012

LAST REVISION	REVISION	DESCRIPTION:			INDEX NO.	SHEET NO.
01/01/10			FDOT DESIGN STANDARDS 2013	DYNAMIC MESSAGE SIGN WALK-IN	18300	2

GENERAL NOTES:

1. DMS Cabinet may be pole or ground mounted depending on project requirements.
2. See sheet 7 for additional conduits for grounding. The number and placement of conduits are approximate.
3. Field adjust pole-mounted DMS cabinet height to achieve best access for maintenance personnel given site conditions as directed by the Engineer. Avoid conflicts with stiffeners, hand-hole and maintenance of anchor bolts.

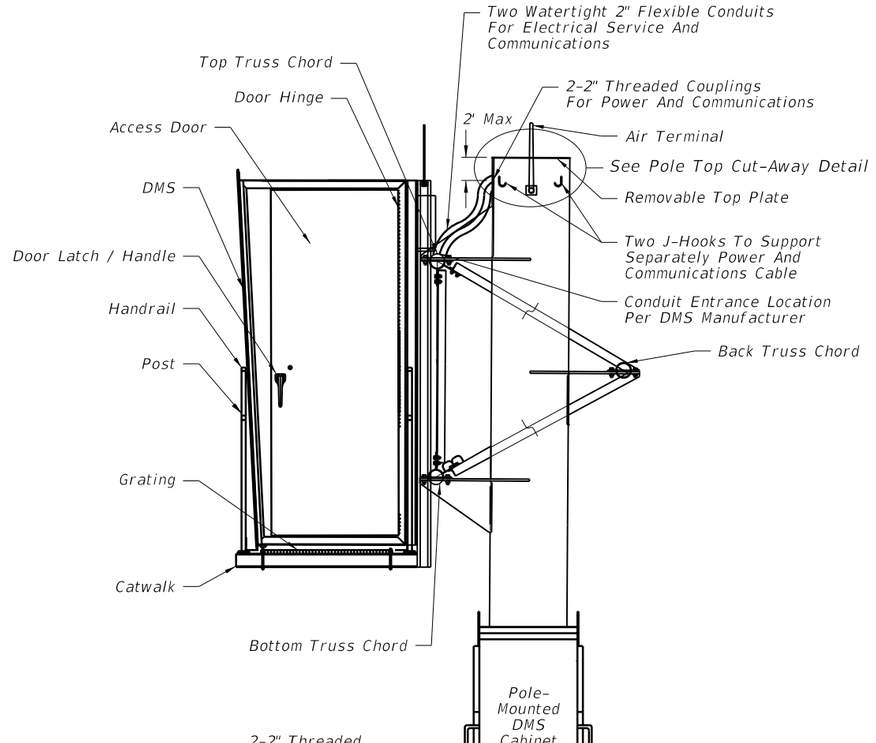

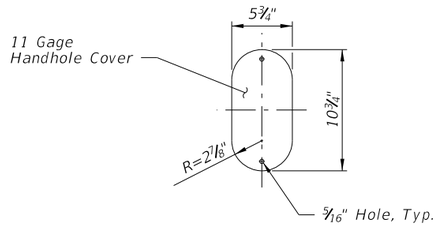

HANDHOLE COVER

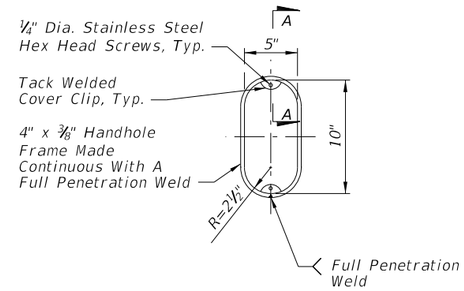

HANDHOLE FRAME

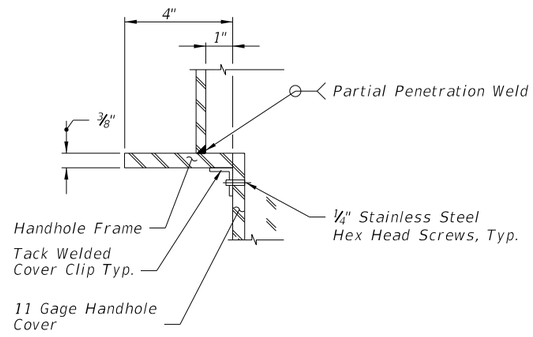

SECTION A-A
(Thru Handhole)

C:\d\projects\standards\its\18000-s\18300-03.dgn rd960rh 2:21:36 PM 6/28/2012

LAST REVISION	REVISION	DESCRIPTION:				
01/01/12			FDOT DESIGN STANDARDS 2013	DYNAMIC MESSAGE SIGN WALK-IN	INDEX NO. 18300	SHEET NO. 3

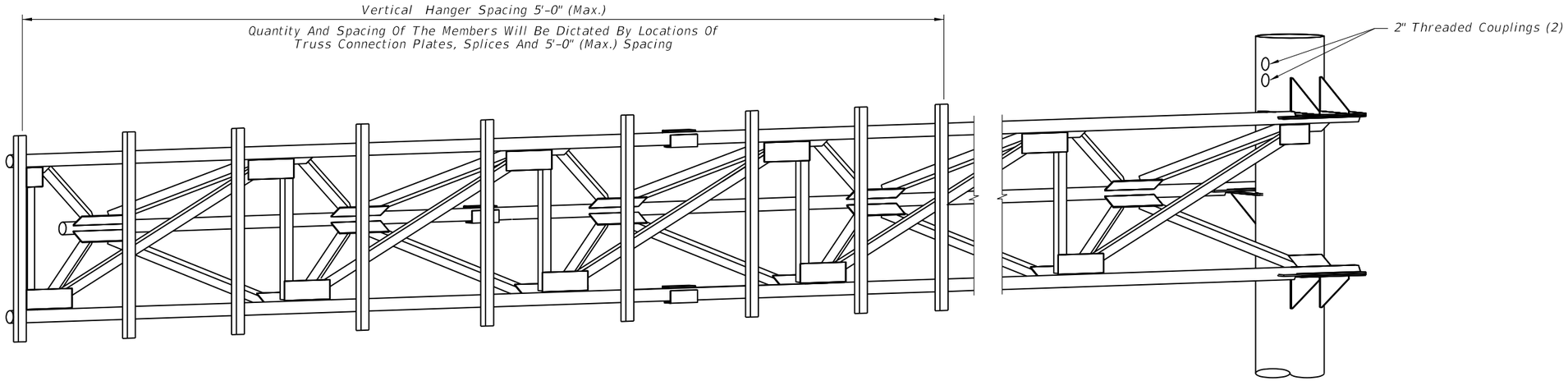

HANGER LOCATION DETAIL

(Cantilever Sign Structure Shown, Span Sign Structure Similar)

GENERAL NOTES

1. Design Specifications: FDOT Structures Manual (current edition) and AASHTO Standard Specifications for Structural Supports for Highway Signs, Luminaires and Traffic Signals.
2. Design Wind Speed: 150 miles per hour. Maximum DMS weight for design: 4500 lb.
3. Shop drawings including the DMS connection are required and fabrication shall not begin until these shop drawings are approved.
4. Locate the sign laterally on the structure as shown in the plans. Vertically center the sign enclosure with the centerline of the truss.
5. Before erection, after both the delivery of the DMS and the steel truss, the contractor shall carefully measure the exact locations for field drilling the ½" bolt holes in the vertical hangers and horizontal mounting member attached to the sign enclosure. Field locate holes to allow vertical hanger placement as shown on the plans with no conflicts with gusset or splice plates.
6. All steel items shall be galvanized as follows:
   All nuts, bolts and washers ASTM F2329
   All other steel items ASTM A123
7. All bolt holes shall be equal to the bolt diameter plus 1/16", prior to galvanizing.
8. All bolts shall have single self-locking nuts, or locking nut system, installed in accordance with the manufacturer's recommendations.
9. Cost of the installation of the DMS on truss including the vertical hanger, associated members, and hardware shall be incidental to the cost of the sign structure.
10. Threaded couplings shall be located on sign side of column above the sign truss.

C:\d\projects\standards\its\18000-s\18300-04.dgn rd960rh 2:21:38 PM 6/28/2012

LAST REVISION	REVISION	DESCRIPTION:		FDOT DESIGN STANDARDS 2013	DYNAMIC MESSAGE SIGN WALK-IN	INDEX NO.	SHEET NO.
07/01/10						18300	4

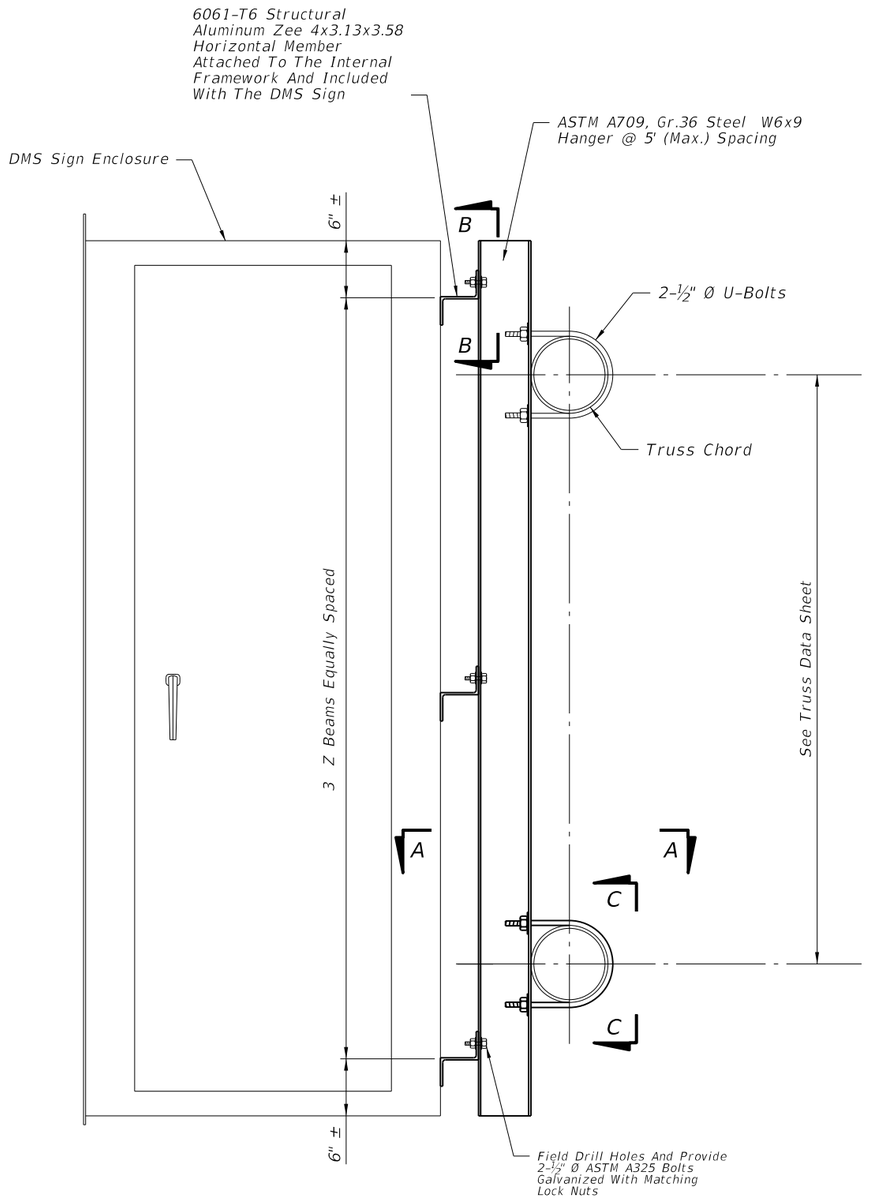

END VIEW

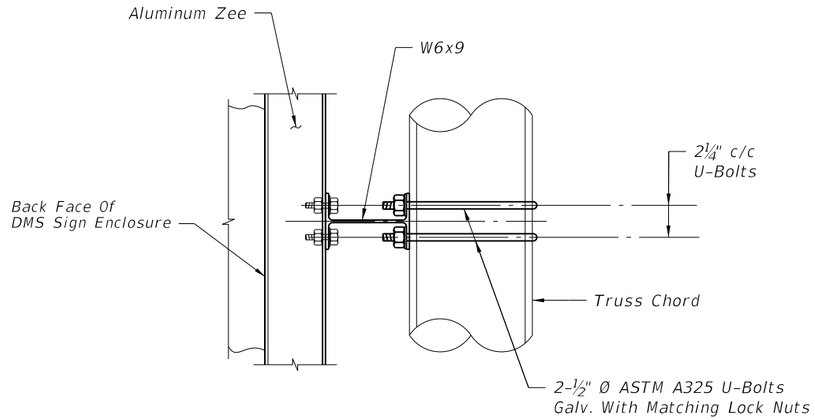

SECTION A-A

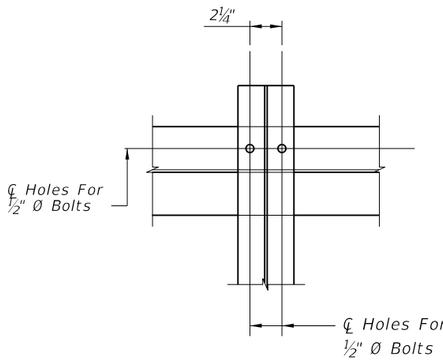

SECTION B-B

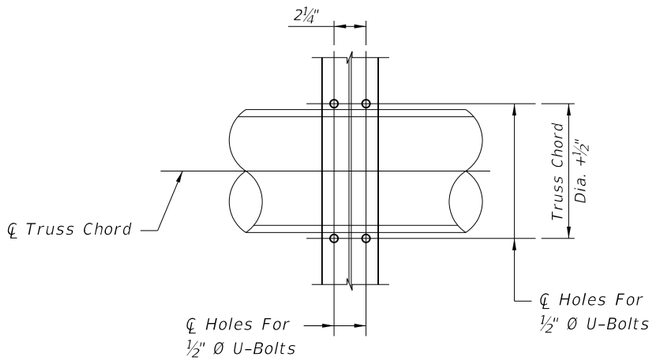

SECTION C-C

C:\d\projects\standards\tis\18000-s\18300-05.dgn
rd960rh
2:21:40 PM
6/28/2012

LAST REVISION	REVISION	DESCRIPTION:			INDEX NO.	SHEET NO.
07/01/10			FDOT DESIGN STANDARDS 2013	DYNAMIC MESSAGE SIGN WALK-IN	18300	5

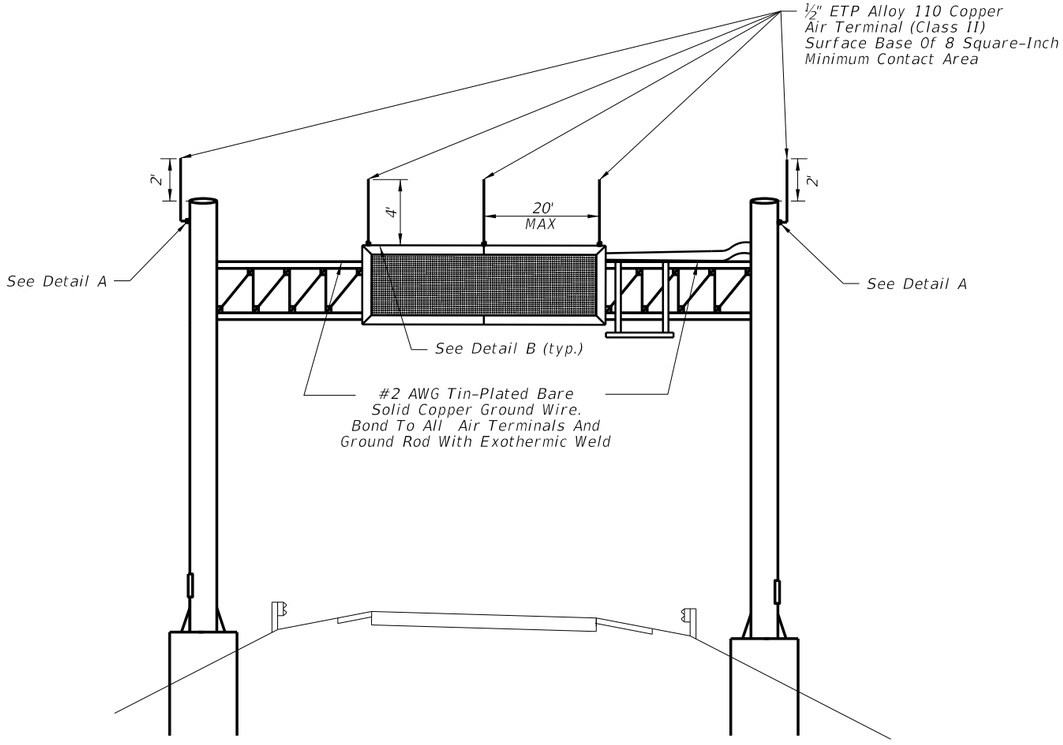

SPAN DMS

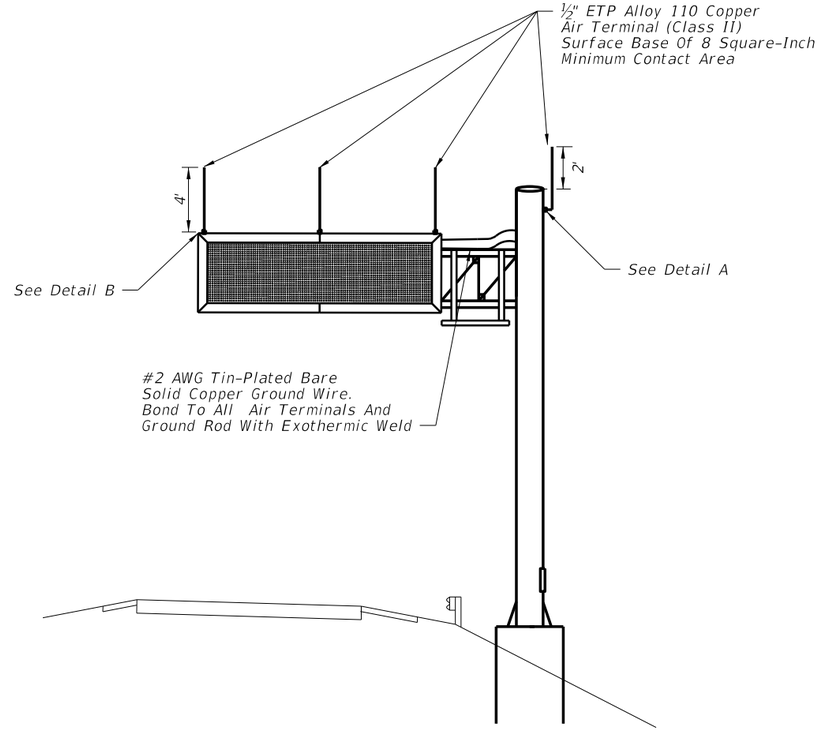

CANTILEVER DMS

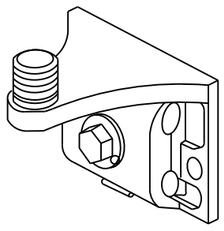

DETAIL A

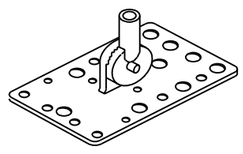

DETAIL B

GENERAL NOTES:

1. All grounding materials shall meet the requirements of Section A620 of the current Minimum Specifications For Traffic Control Signal Devices (MSTCSD), except as noted.
2. Exothermically weld all connections to ground rods.
3. The contractor may, upon approval of the Engineer, install a 30-foot sectional ground rod for instances when conditions will not allow for the installation of the 3 auxiliary ground rods.
4. Install marker tape directly above all grounding electrodes and conductors.
5. Copper flat surfaces shall be bolted, welded, or brazed securely to framework to maintain electrical continuity.
6. All air terminals must meet UL-96A.
7. Grounding system shall be placed within right of way.
8. See Sheet 7 for ground rod placement detail.
9. Lightning protection shall conform to NFPA 780. Spacing between air terminals shall not exceed 20 feet.

C:\d\projects\standards\its\18000-s\18300-06.dgn
rd960rh
2:21:42 PM
6/28/2012

LAST REVISION	REVISION	DESCRIPTION:		FDOT DESIGN STANDARDS 2013	DYNAMIC MESSAGE SIGN WALK-IN	INDEX NO.	SHEET NO.
07/01/10						18300	6

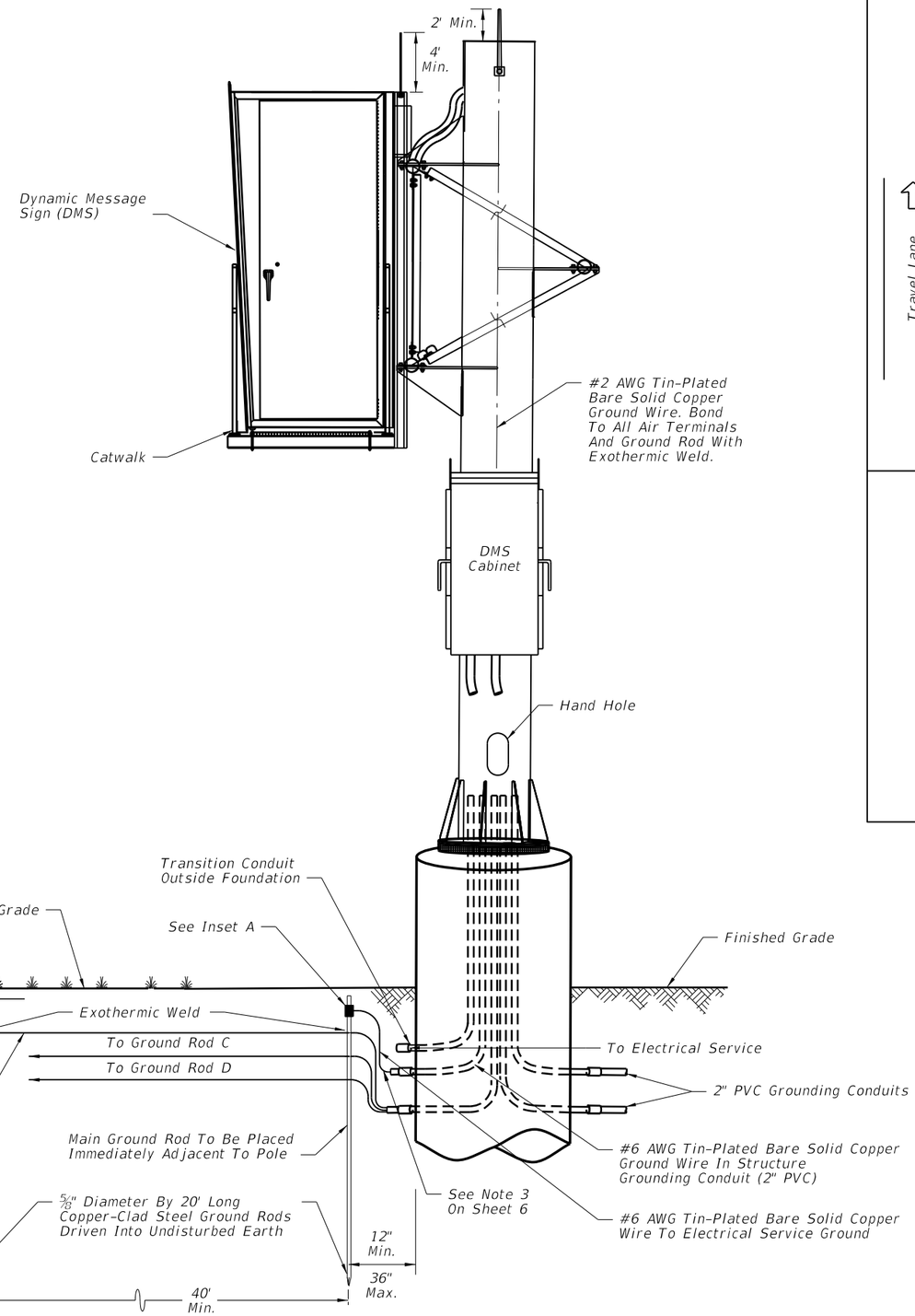

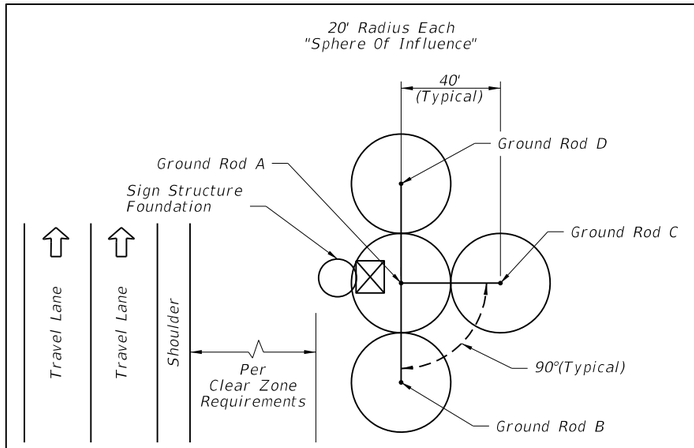

GROUND ROD PLACEMENT DETAIL (TYPICAL)

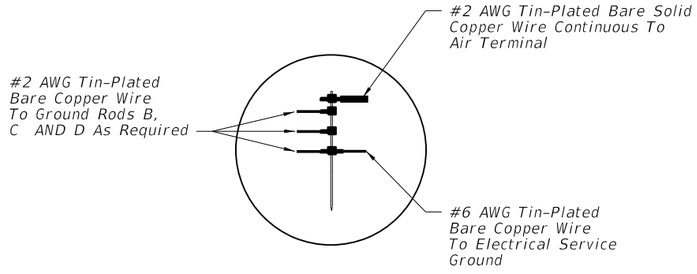

INSET 'A'

C:\d\projects\standards\tis\18000-s\18300-07.dgn
rd960rh
2:21:44 PM
6/28/2012

LAST REVISION	REVISION	DESCRIPTION:				
01/01/12			FDOT DESIGN STANDARDS 2013	DYNAMIC MESSAGE SIGN WALK-IN	INDEX NO. 18300	SHEET NO. 7

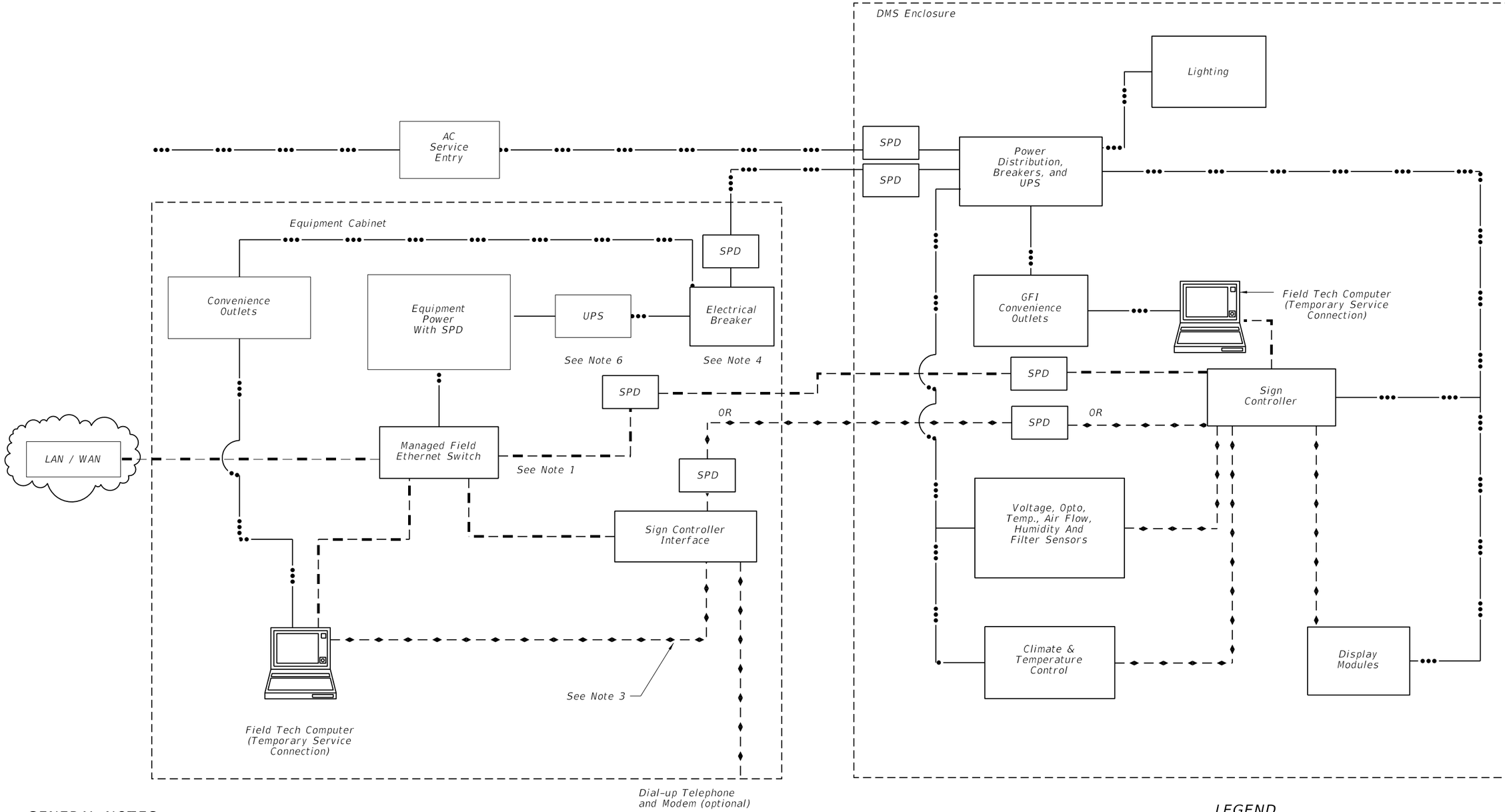

GENERAL NOTES:

1. Provide single ethernet connection from the managed field ethernet switch to either the sign controller interface in cabinet or sign controller in sign enclosure.
2. Locate cabinet as shown in plans.
3. Serial data link is for communications directly to the DMS controller.
4. Cabinet must include at least one breaker to control all cabinet power.
5. AC service entrance may be located in cabinet or sign housing.
6. UPS equipment location may vary. Diagram indicates functional requirements that uninterrupted power must be available in cabinet and sign housing.

LEGEND

Data

Ethernet

Power

SPD — Surge Protection Device

SIGN AND CABINET WIRING DIAGRAM

LAST REVISION	REVISION	DESCRIPTION:			INDEX NO.	SHEET NO.
07/01/10			FDOT DESIGN STANDARDS 2013	DYNAMIC MESSAGE SIGN WALK-IN	18300	8

6/28/2012 2:21:46 PM rd960rh C:\d\projects\standards\its\18000-s\18300-08.dgn

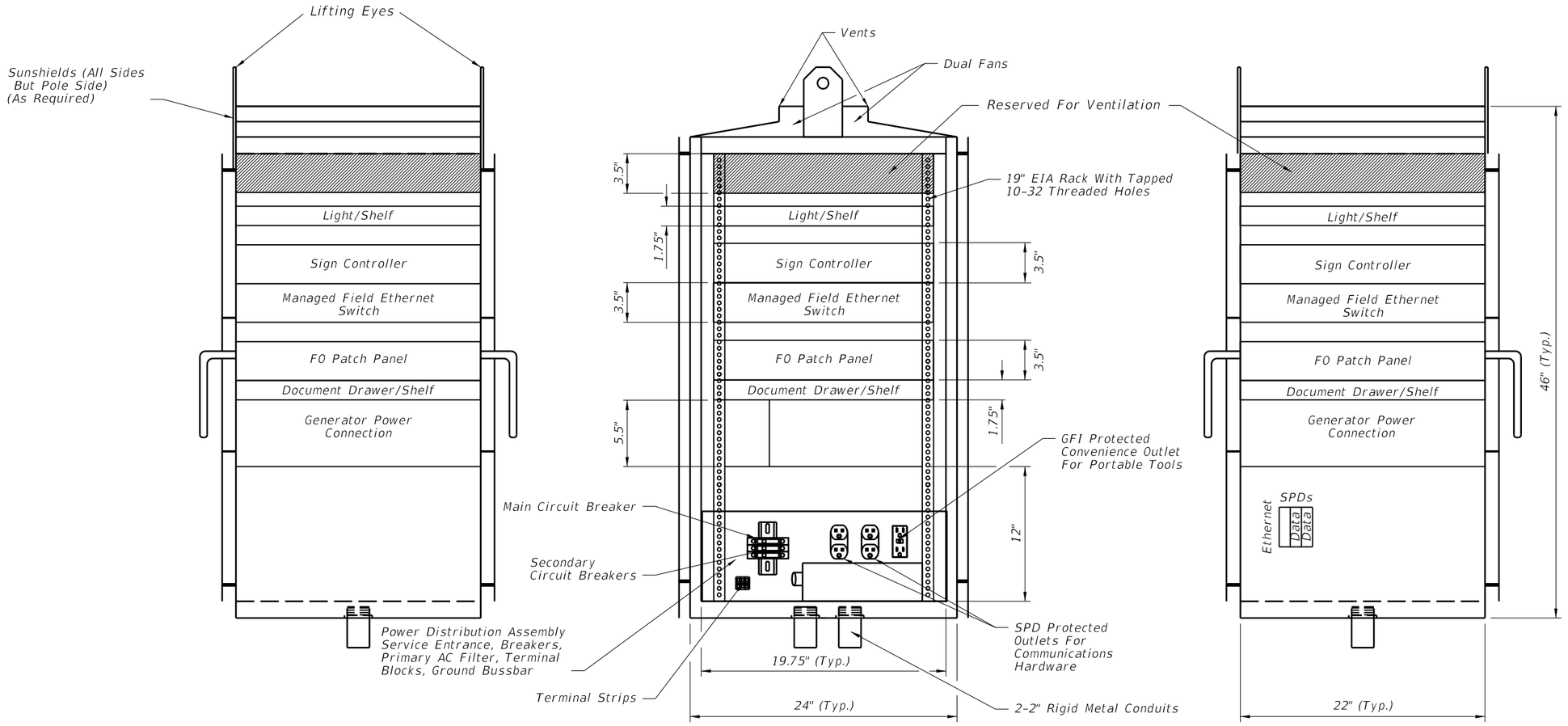

LEFT SIDE VIEW

FRONT VIEW
POLE MOUNTED DMS CABINET

RIGHT SIDE VIEW

GENERAL NOTES:

1. Cabinet layout is for pole or ground mounted installations.
2. All dimensions and equipment locations are approximate.
3. Conduit entrances are at bottom of cabinet.
4. Minimum number of duplex outlets is three, (2) SPD protected and (1) GFI protected.
5. Either an access controller or local access panel shall be provided to provide full access to DMS sign for control, programming and troubleshooting.
6. Load center shall be sized for connected equipment and convenience outlets with at least one main disconnect and three circuit breakers.
7. Batteries and UPS may be located in sign housing or cabinet.
8. Power Distribution Assembly component layout, orientation and location may vary.

CABINET LAYOUT 1

C:\d\projects\standards\its\18000-s\18300-09.dgn rd960rh 2:21:48 PM 6/28/2012

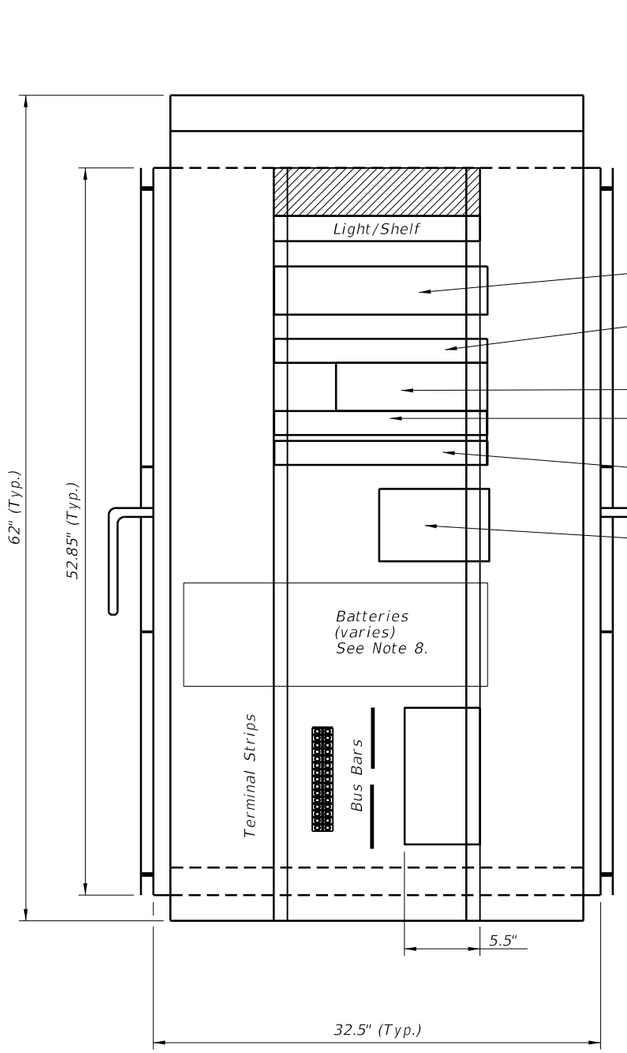

LEFT SIDE VIEW

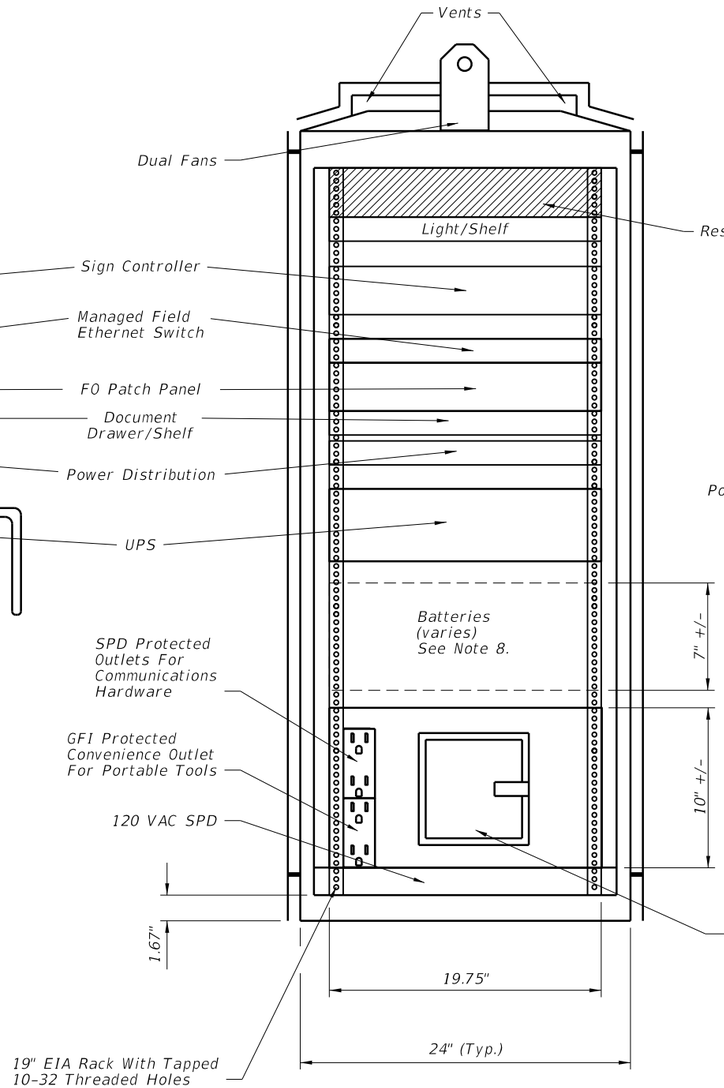

FRONT VIEW
GROUND MOUNTED DMS CABINET

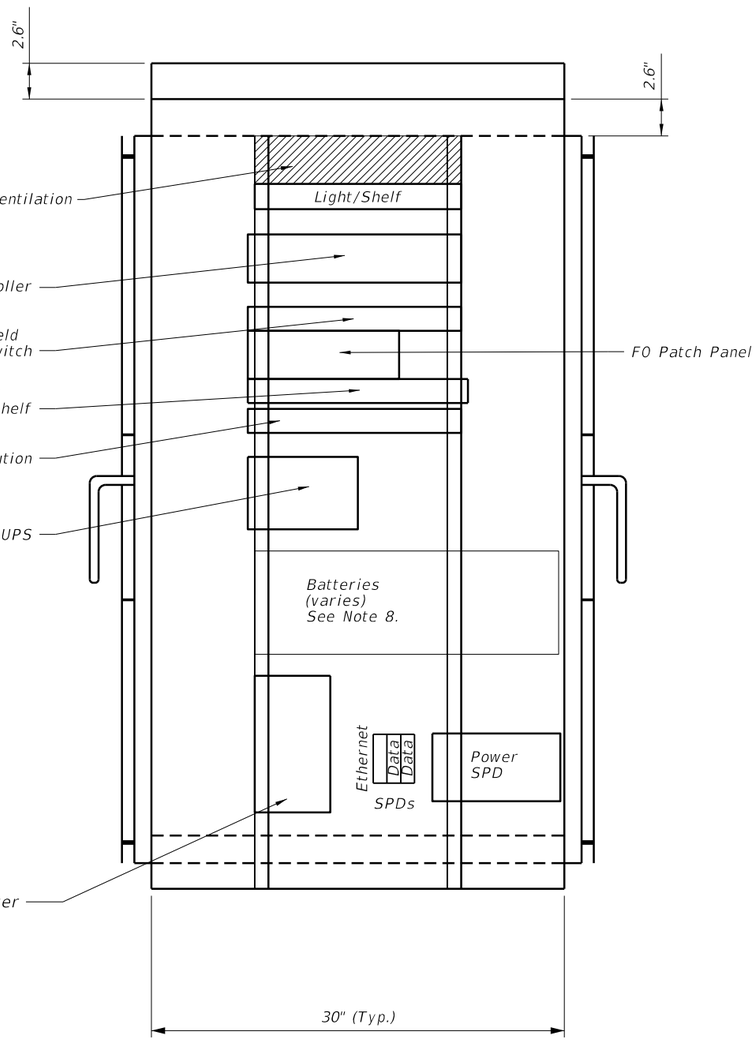

RIGHT SIDE VIEW

CABINET LAYOUT 2

6/28/2012 2:21:50 PM rd960rh C:\d\projects\standards\its\18000-s\18300-10.dgn

LAST REVISION	REVISION	DESCRIPTION:			INDEX NO.	SHEET NO.
07/01/10			FDOT DESIGN STANDARDS 2013	DYNAMIC MESSAGE SIGN WALK-IN	18300	10

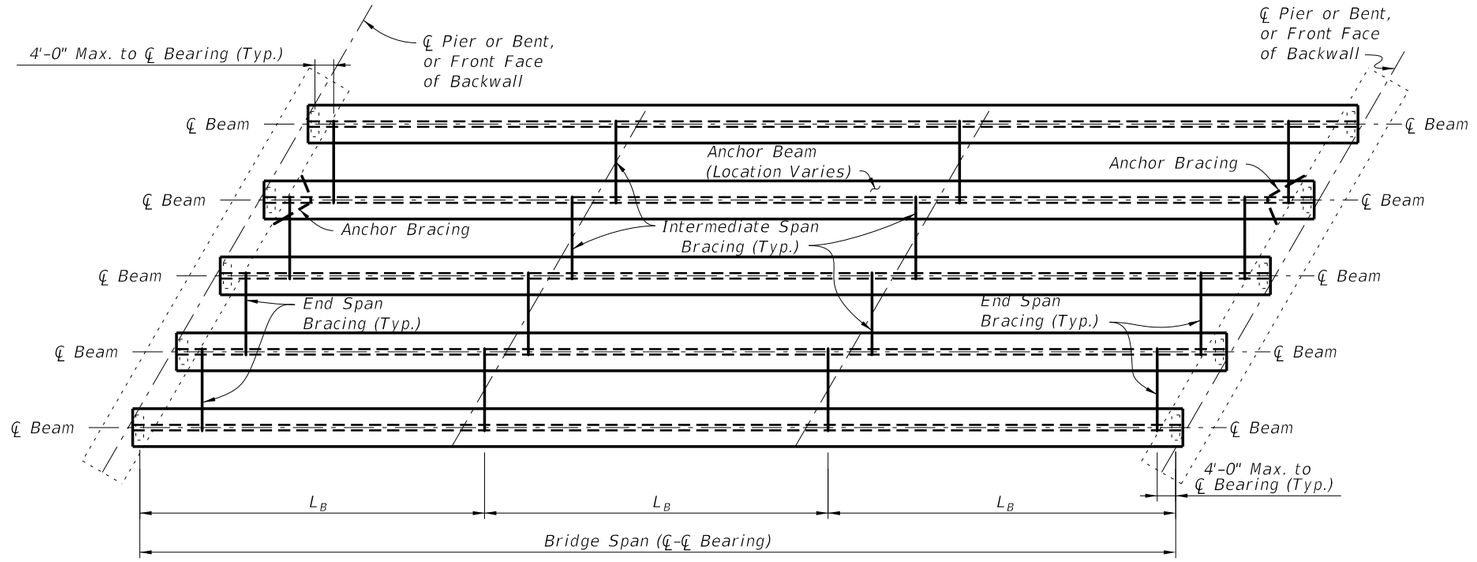

PRESTRESSED BEAM TEMPORARY BRACING PLAN VIEW
(Skewed Condition Shown, Non-skewed Condition Similar)

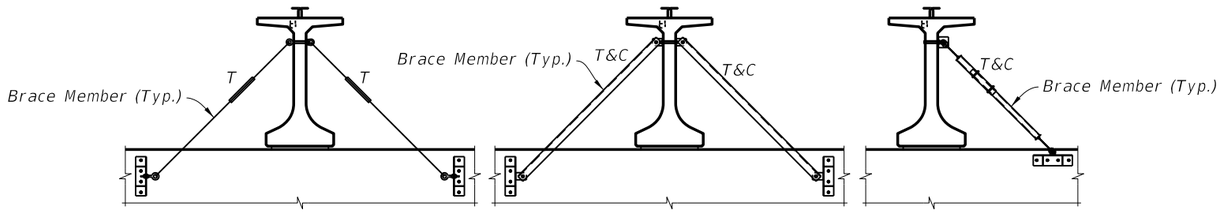

EXAMPLE ANCHOR BRACING TYPICAL SECTIONS
(Beam Ends Only)

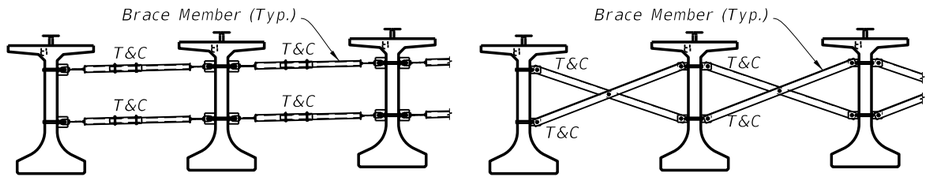

EXAMPLE END SPAN/INTERMEDIATE BRACING TYPICAL SECTIONS

NOTES:

1. *The 'PRESTRESSED BEAM TEMPORARY BRACING PLAN' is to be used in conjunction with the 'TABLE OF TEMPORARY BRACING VARIABLES' in the Structures Plans. The brace locations and quantities shown in the plan view are schematic only, and the actual brace locations and quantities should be determined from the 'TABLE OF TEMPORARY BRACING VARIABLES' in the Structures Plans.*

2. *The bracing members shown in the sections are schematic only, and are meant to show geometry in which bracing should be placed. The bracing members and connections shall be designed and detailed by the Contractor. Any of the geometric configurations shown in the bracing sections are acceptable. The bracing may be attached through the web or to the flanges of the beam, as necessary. The bracing shall be positively and securely connected to each beam, and shall not be designed to exert any vertical force on the outer edge of the top flange. All bolt holes in beams are to be preformed and filled after use. All bracing is to be placed perpendicular to beams.*

3. *The anchor beam is a beam which has anchor bracing at its support locations. It is to be set first, and its location may vary. All subsequent beams are to be braced against the Anchor Beam sequentially. The Anchor brace may be located at an exterior girder provided that all required bolt clear distances are met and overhang bracing is not impacted. Anchor bracing may be inclined, as shown in the plan view, or may be installed vertically.*

4. *Overhang bracing requirements are neither specified here nor in the 'TABLE OF TEMPORARY BRACING VARIABLES.' It is the Contractor's responsibility to design overhang bracing which does not cause excessive deflection or rotation of the exterior girder, or cause the girder stresses to exceed stress limits per the FDOT Structures Manual.*

5. *The Contractor shall submit documentation required by the Specifications for Road and Bridge Construction, Section 5 for 'Beam and Girder Temporary Bracing.' If the Contractor elects to use the bracing requirements shown in the 'TABLE OF TEMPORARY BRACING VARIABLES,' the documentation shall include signed and sealed certification that the construction loads do not exceed those shown in the 'TABLE OF ASSUMED CONSTRUCTION LOADS' and signed and sealed design of bracing members and connections. If the Contractor elects to use a bracing scheme different from those shown in the 'TABLE OF TEMPORARY BRACING VARIABLES,' the documentation shall include signed and sealed calculation of the bracing requirements and design of bracing members and connections.*

LEGEND:

T = Tension Member
T&C = Tension & Compression Member

LAST REVISION	REVISION	DESCRIPTION:		FDOT DESIGN STANDARDS 2013	PRESTRESSED I-BEAM TEMPORARY BRACING	INDEX NO.	SHEET NO.
01/01/12						20005	1

C:\d\projects\standards\structures\2013book\20005-1of1.dgn rd960rh 2:21:52 PM 6/28/2012

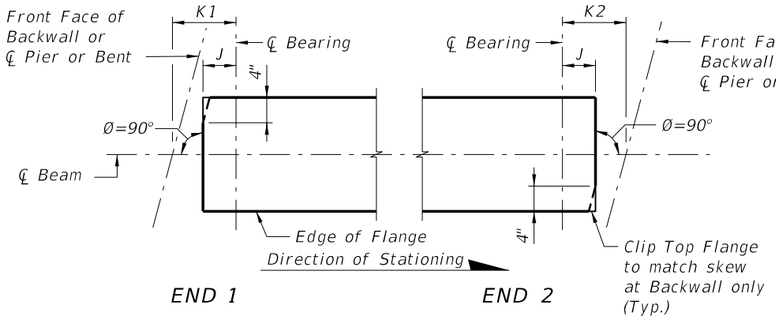

CASE 1
(Standard Orientation for New Construction)

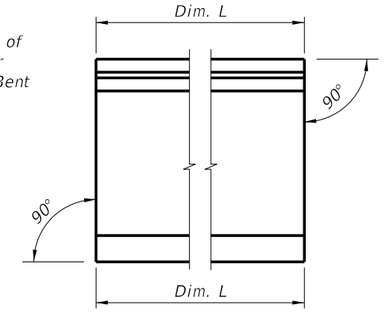

CONDITION 1
(Dim P = 0.0)

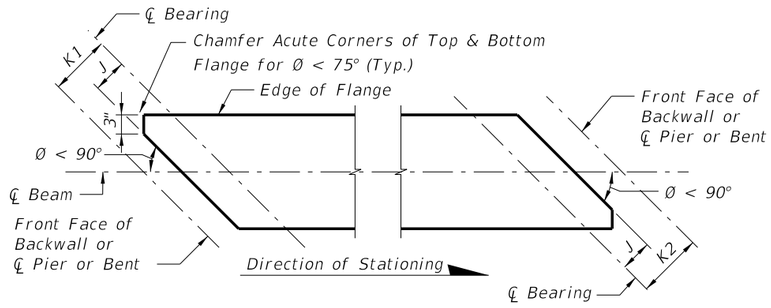

CASE 2
(Special Orientation for Widenings)

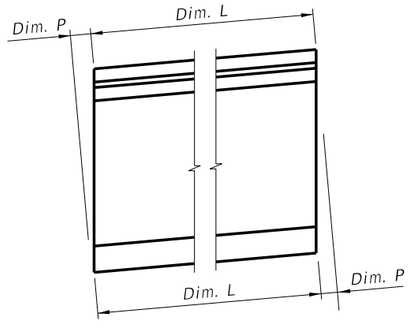

CONDITION 2

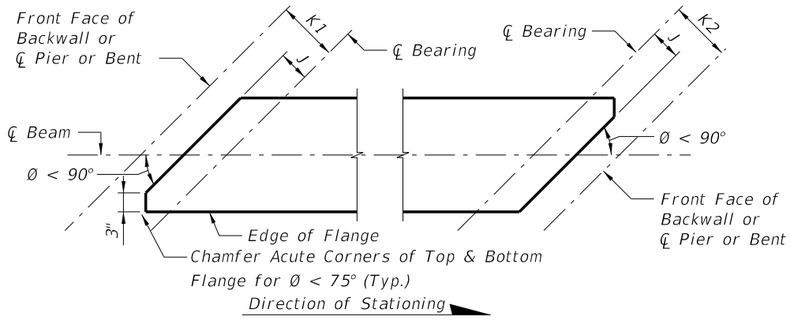

CASE 3
(Special Orientation for Widenings)

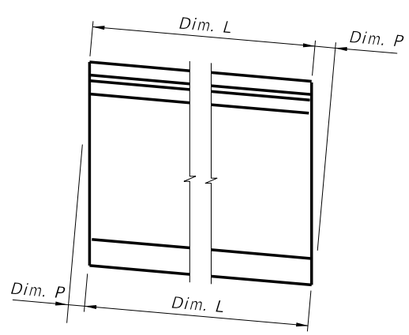

CONDITION 3

SCHEMATIC PLAN VIEWS AT BEAM ENDS

SCHEMATIC END ELEVATIONS OF BEAMS
(Showing Vertical Bevel of Beam End)

BEAM NOTES

1. All bar dimensions are out-to-out.
2. Place one (1) Bar 5K or 5Z at each location as detailed alternating the direction of the ends for each bar (see "ELEVATION AT END OF BEAM", Index Nos. 20036, 20045, 20054, 20063, 20072, 20078, 20084 and 20096).
3. Strands N shall be ASTM A416, Grade 270, seven-wire strands $\frac{3}{8}$" Ø or larger, stressed to 10,000 lbs. each.
4. For beams with ends not to be encased in permanent concrete diaphragms, cut wedge to recess Prestressing Strands at the end of the beam after detensioning without damaging the surrounding concrete. See STRAND RECESS DETAIL on Sheet 2.
5. For beams with ends not to be encased in permanent concrete diaphragms, protect end of recessed strands in accordance with Specification 450.
6. Unless otherwise noted, the minimum concrete cover for reinforcing steel shall be 2".
7. At the Contractor's option, welded deformed wire reinforcement may be used in lieu of Bars 3D, 5K, 4M, and 5Z as shown on the Standard Details for each beam size. Welded deformed wire reinforcement shall conform to AASHTO M221, with a minimum yield strength of 75 ksi.
8. Safety Line Anchorage Devices or sleeves are required and permitted in the top flange only to accomodate fall protection systems used during construction. See shop drawings for details and spacing of any required embedments.
9. For beams with skewed end conditions, the end reinforcement, defined as Bars 3C1, 3C2, 3D1, 3D2, 5K, 4M1, 4M2, 5Y and 5Z placed within the limits of the spacing for Bars 3C in "ELEVATION AT END OF BEAM", shall be placed parallel to the skewed end of the beam. Bars 3D3, 5K and 4M3 located beyond the limits of Bars 3C shall be placed perpendicular to the longitudinal axis of the beam. Fan Bars as needed to avoid overlapping bars at the transition to Bars 3D3 and 4M3, and field cut to maintain minimum cover. Provide additional Bars 4M1, 4M2, 3D1 and 3D2 as required; additional bars are not included in the Number Required on the "BILL OF REINFORCING STEEL". For placement locations, see "SKEWED BEAM END DETAILS". Adjust the dimensions of Bars 3C1, 3C2, 3D1, 3D2, 4M1 and 4M2 as shown on the "BENDING DIAGRAM" for skewed end conditions.
10. Placement of Bars 3C1, 3D1 and 4M1 correspond to END 1, and Bars 3C2, 3D2 and 4M2 correspond to END 2. END 1 and END 2 are shown on the beam "ELEVATION".
11. For Beams with vertically beveled end conditions, place first row of Bars 3C1, 3C2, 3D1, 3D2, 5K, 5Y and 5Z parallel to the end of the beam. Progressively rotate remaining bars within the limits of Bars 5Z until vertical by adjusting the spacing at the top of beam up to a maximum of 1". For welded deformed wire reinforcement, cut top cross wire and rotate bars as required or reduce end cover at top of the beam to minimum 1".
12. For beams with skewed end conditions, welded deformed wire reinforcement shall not be used for end reinforcement (Bars 3D1, 3D2, 4M1 and 4M2) .
13. Bars 5K and 5Z shall be placed and tied to the fully bonded strands in the bottom or center row (see "STRAND PATTERN" on the Table of Beam Variables in Structures Plans). At the Contractor's option the length of the bottom legs of Bars 5K and 5Z may be extended to facilitate tying to the exterior strands. For welded deformed wire reinforcement, supplemental transverse #4 bars are permitted to support Pieces K & S under the cross wires on the bottom row of strands.
14. At the Contractor's option, Bars 3D1, 3D2 and 3D3 may be fabricated as a single bar with a 1'-0" minimum lap splice of the top legs, or the length of the bottom legs may be extended to facilitate tying to the exterior strands.
15. For referenced Dimensions, Angles and Case Numbers, see the Table of Beam Variables in Structures Plans.

C:\d*projects\standards\structures\2013book\20010-1of2.dgn
rd960rh
2:21:55 PM
6/28/2012

LAST REVISION	REVISION	DESCRIPTION:				
07/01/12			FDOT DESIGN STANDARDS 2013	TYPICAL FLORIDA-I BEAM DETAILS AND NOTES	INDEX NO. 20010	SHEET NO. 1

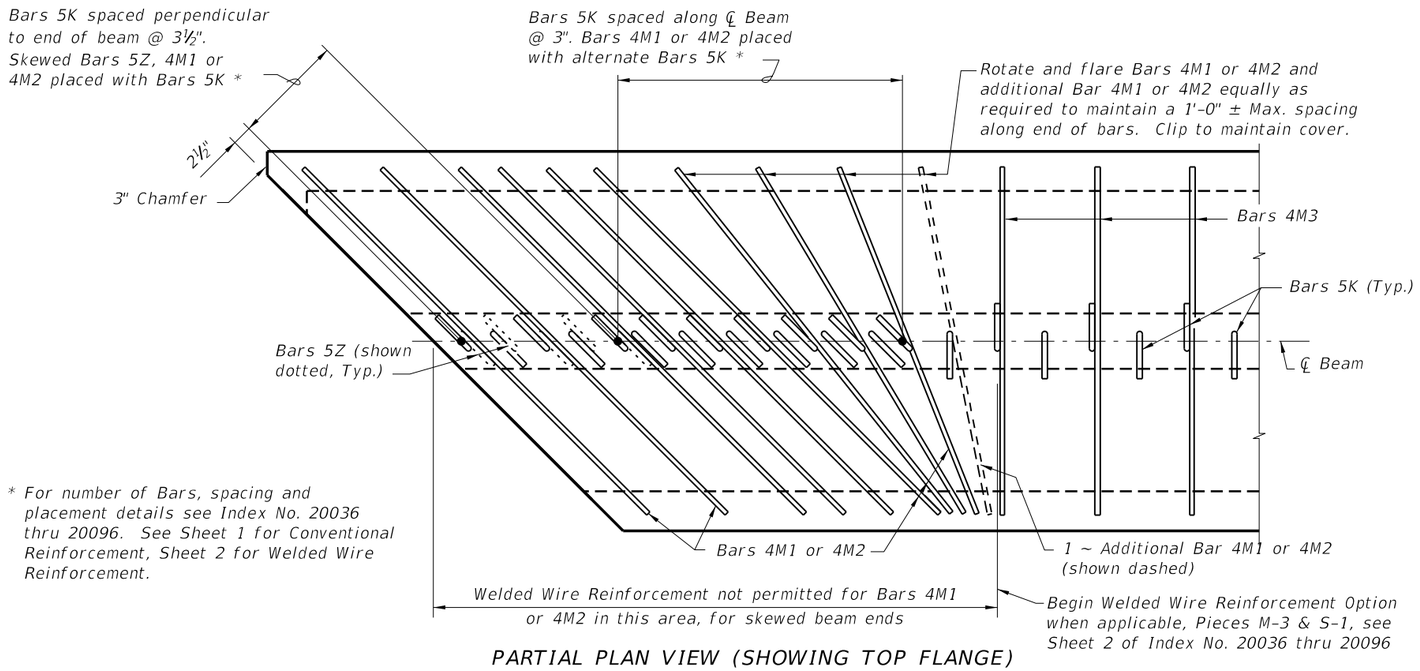

* For number of Bars, spacing and placement details see Index No. 20036 thru 20096. See Sheet 1 for Conventional Reinforcement, Sheet 2 for Welded Wire Reinforcement.

PARTIAL PLAN VIEW (SHOWING TOP FLANGE)
(End 1 Shown, End 2 Similar)
(Bars 5A, 5Y & Strands N not shown for clarity)

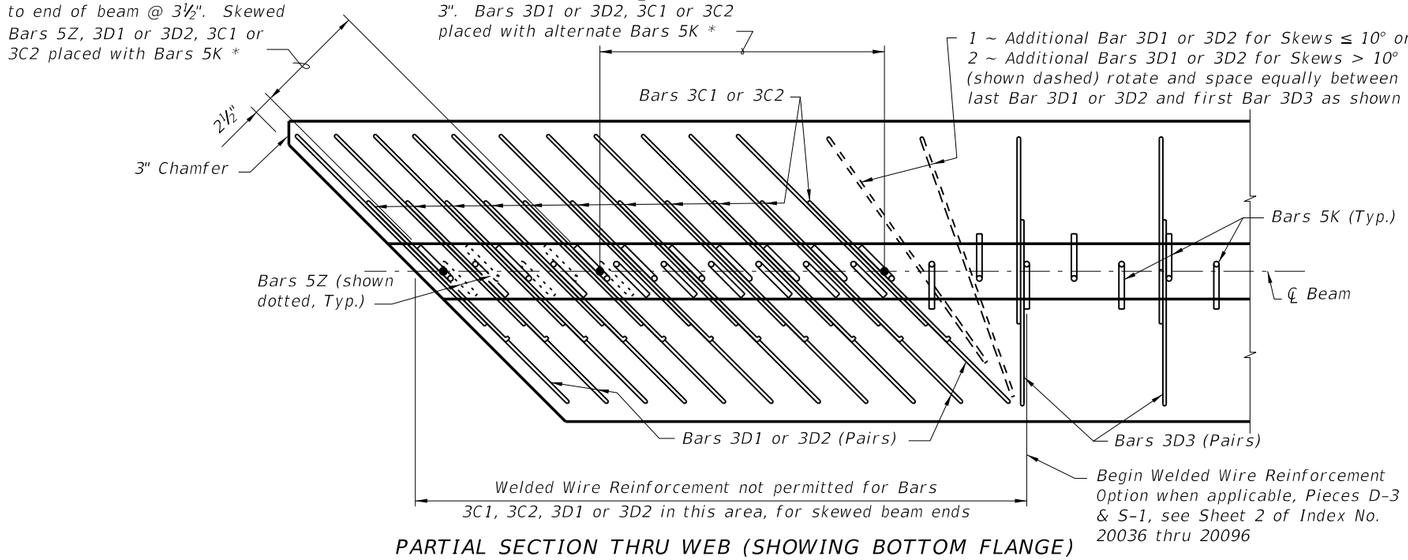

PARTIAL SECTION THRU WEB (SHOWING BOTTOM FLANGE)
(End 1 Shown, End 2 Similar)
(Bars 5Y & Strands not shown for clarity)

SKEWED BEAM END DETAILS FOR WIDENING EXISTING BRIDGES

(Florida-I 36 Beam shown, others similar)

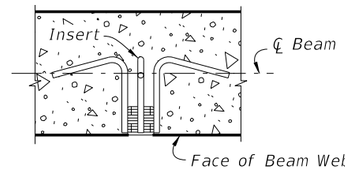

PLAN SECTION THRU BEAM WEB AT INSERT FOR DIAPHRAGM REINFORCING
(When Intermediate Diaphragms are Required by Design)

INSERT NOTES

1. Provide 1" Ø, zinc-electroplated, ferrule wing nut or coil inserts, UNC threads, 1/0 minimum gage wire, not more than 4" in depth with a minimum ultimate tensile strength of 11,400 lbs. in 4,000 psi concrete.
2. If inserts are needed on both sides (faces) of beam webs, an assembly as long as the thickness of the beam web, consisting of two (2) ferrule or coil inserts attached by two (2) or more struts may be utilized. The connecting struts shall have a minimum ultimate tensile strength of 11,400 lbs.
3. Inserts for diaphragm reinforcing are required at each end of each intermediate diaphragm shown on the Beam Framing Plan and may be required at the end of the beams when end diaphragms are shown. See Superstructure and Beam Framing Plans for longitudinal location of inserts for each face of beam.

INSERT DETAIL

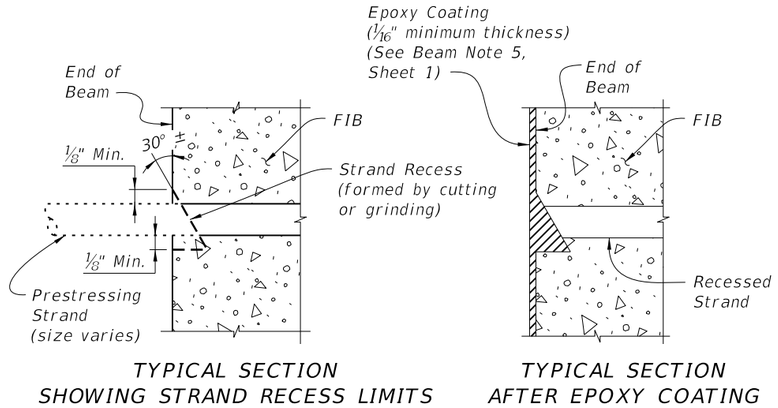

TYPICAL SECTION SHOWING STRAND RECESS LIMITS

TYPICAL SECTION AFTER EPOXY COATING

STRAND RECESS DETAIL

6/28/2012 2:21:57 PM rd960rh C:\d_projects\standards\structures\2013book\20010-2of2.dgn

LAST REVISION	REVISION	DESCRIPTION:				
07/01/12			FDOT DESIGN STANDARDS 2013	TYPICAL FLORIDA-I BEAM DETAILS AND NOTES	INDEX NO. 20010	SHEET NO. 2

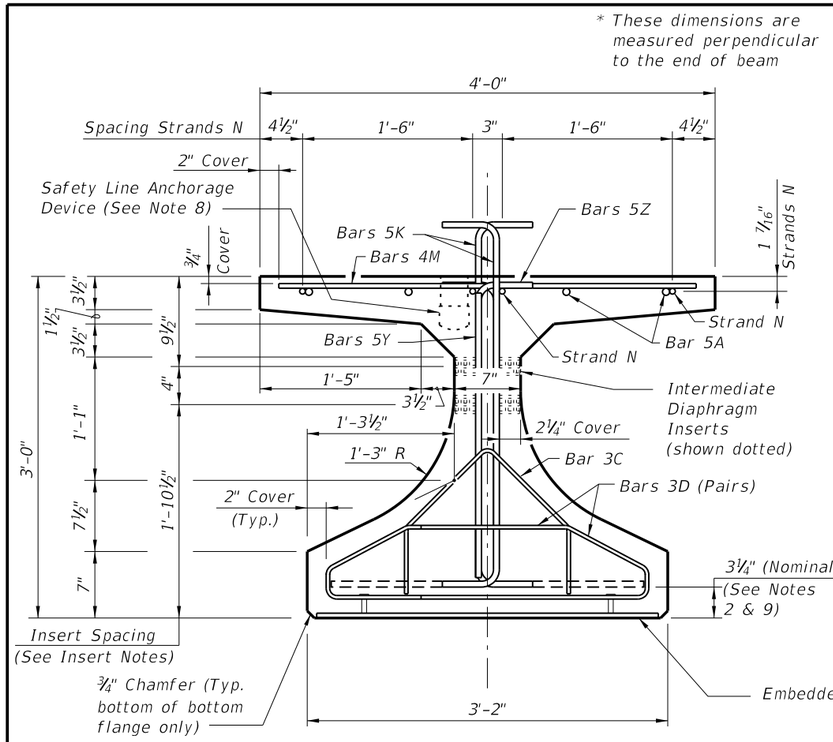

END VIEW

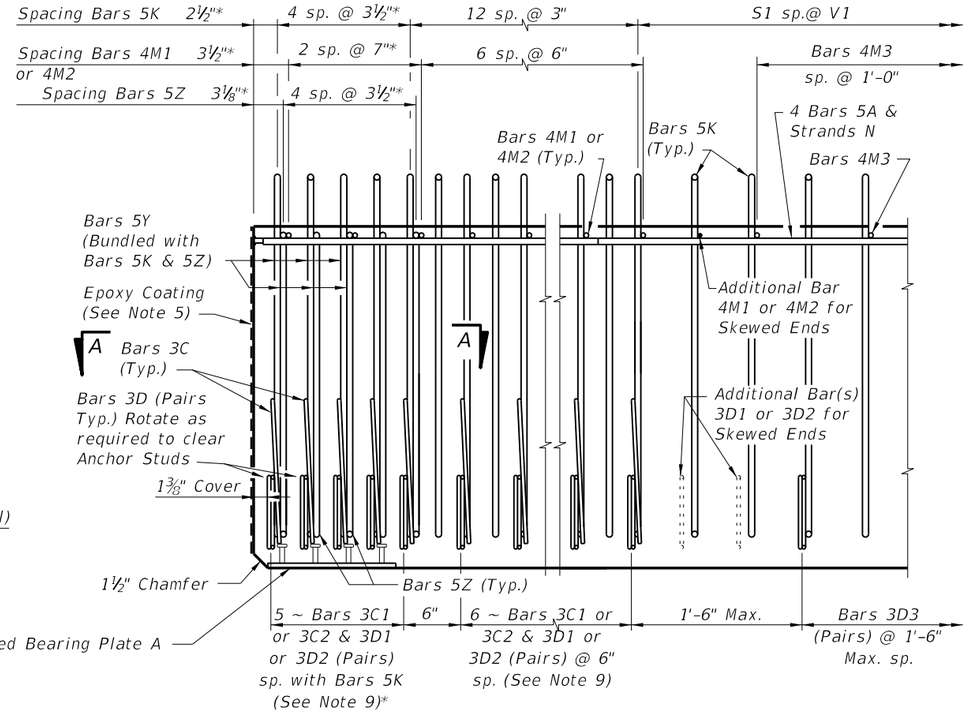

ELEVATION AT END OF BEAM
(Flanges Not Shown For Clarity)
(End 1 Shown, End 2 Similar)

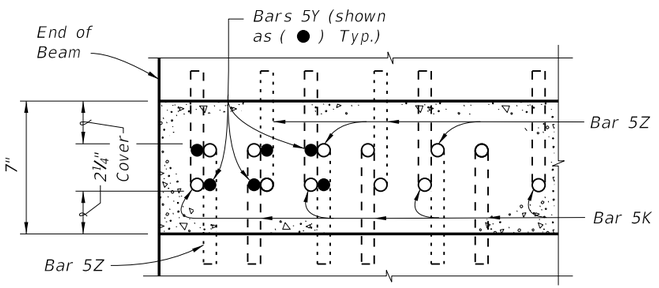

SECTION A-A FOR CONVENTIONAL REINFORCING
(Showing Bars 5K, 5Y & 5Z Only)

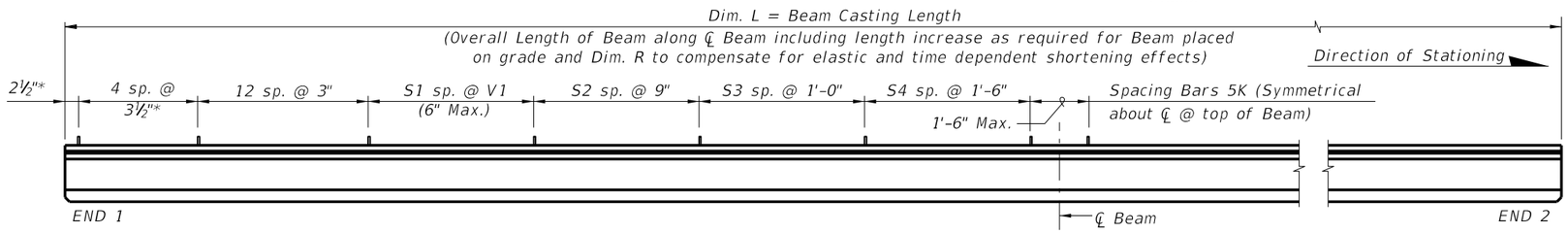

ELEVATION

CONVENTIONAL REINFORCING BAR BENDING DETAILS

BILL OF REINFORCING STEEL

MARK	NOTE NUMBERS	SIZE	NUMBER REQUIRED	LENGTH (NOTE 1)
A	—	5	8	16'-0"
C1	9, 10 & 11	3	11 (End 1)	Varies
C2	9, 10 & 11	3	11 (End 2)	Varies
D1	9, 10, 11 & 14	3	22 (End 1)	Varies
D2	9, 10, 11 & 14	3	22 (End 2)	Varies
D3	9 & 14	3	See Table	4'-3"
K	2, 9, 11 & 13	5	See Table	4'-2"
M1	9 & 10	4	9 (End 1)	Varies
M2	9 & 10	4	9 (End 2)	Varies
M3	9	4	See Table	3'-8"
N	3 & 4	⅜" Ø Strand	4	Dim. L
Y	9 & 11	5	12	2'-6"
Z	2, 9, 11 & 13	5	10	3'-8"

BENDING DIAGRAMS (See Note 1)

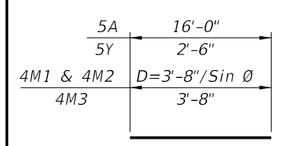

BARS 5A, 4M1, 4M2, 4M3 & 5Y

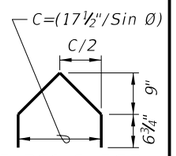

BARS 3C1 & 3C2

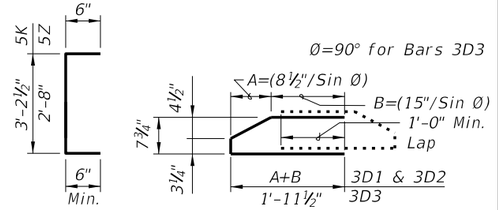

BARS 5K & 5Z BARS 3D1, 3D2 & 3D3

NOTES:
A. Work this Index with Index No. 20010 – Typical Florida-I Beam Details and Notes and the Florida-I Beam – Table of Beam Variables in Structures Plans.
B. For referenced notes, see Index No. 20010.
C. For Dimensions A, B, C, D, L, R & V1 and number of spaces S1 thru S4, see Florida-I Beam – Table of Beam Variables in Structures Plans.

C:\d\projects\standards\structures\2013book\20036-1of2.dgn rd960rh 2:21:59 PM 6/28/2012

LAST REVISION	REVISION	DESCRIPTION:				
07/01/12			FDOT DESIGN STANDARDS 2013	FLORIDA-I 36 BEAM - STANDARD DETAILS	INDEX NO. 20036	SHEET NO. 1

ALTERNATE REINFORCING STEEL (WELDED WIRE REINFORCEMENT) DETAILS

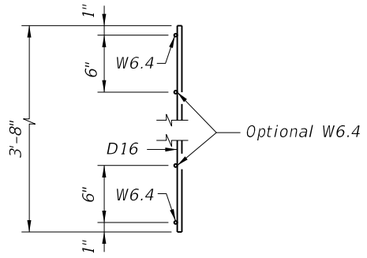

PIECES M
END VIEW

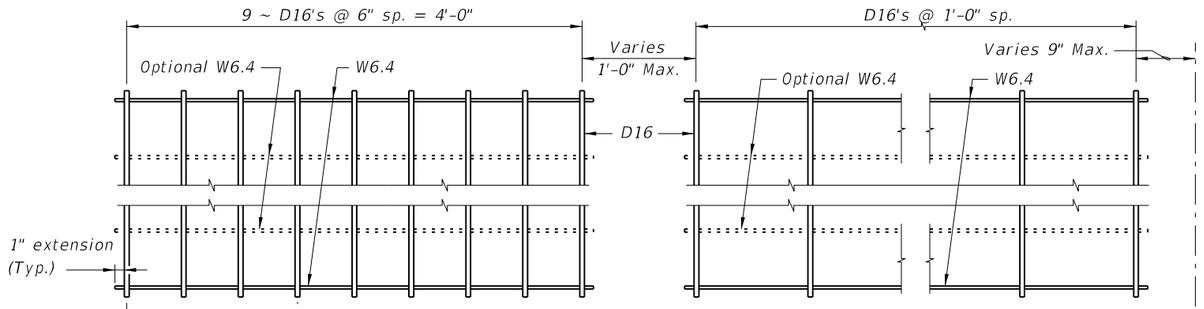

PLAN VIEW
PIECE M-1
(2 Required)

PLAN VIEW
PIECE M-3
(2 Required)

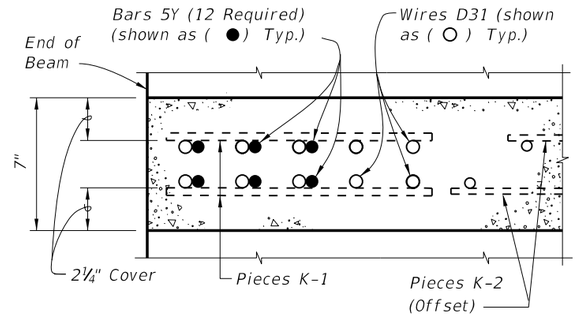

SECTION A-A
FOR WELDED WIRE REINFORCEMENT

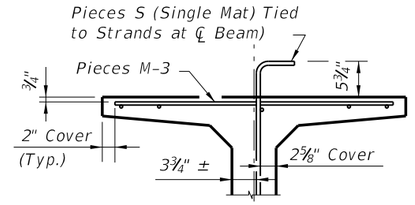

PARTIAL SECTION AT CENTER BEAM

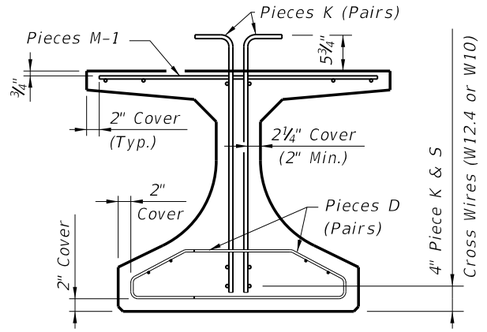

PARTIAL BEAM END VIEW
(Conventional Reinforcing Bars A, C, Y
and Strands not Shown for Clarity)

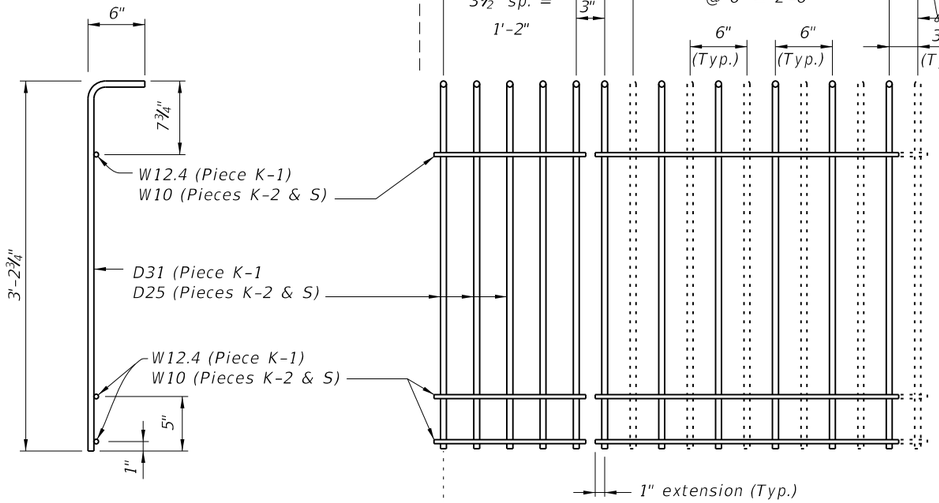

PIECES K & S
END VIEW

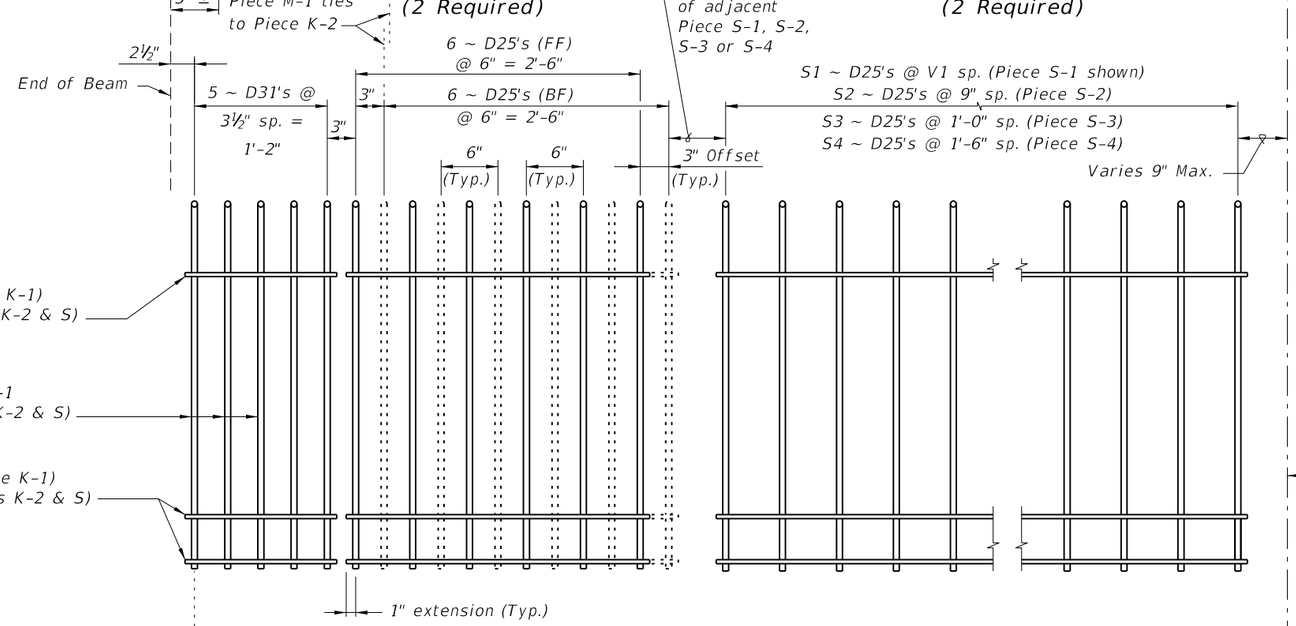

PIECE K-1
(Aligned EF)
(4 Required ~
2 Pairs)

PIECE K-2
(FF Shown Solid,
BF Shown Dashed)
(4 Required)

PIECE S-1, S-2, S-3 or S-4
(2 Required Each Piece)

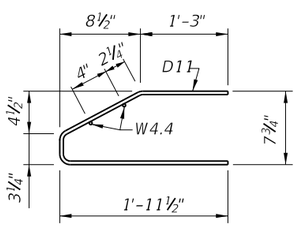

PIECES D
END VIEW

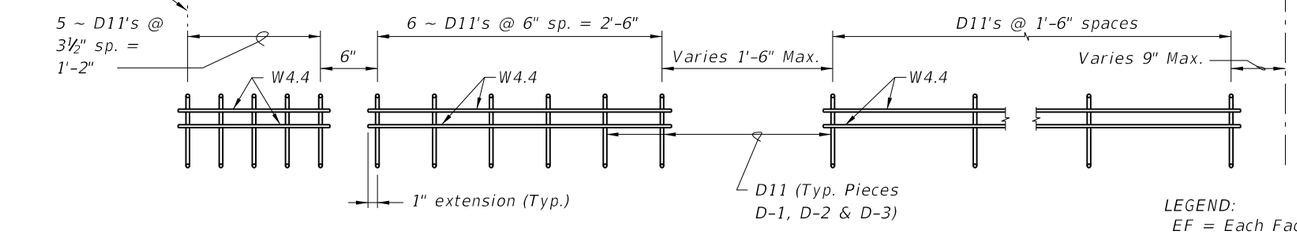

PIECE D-1
(4 Required ~ 2 Pairs)

PIECE D-2
(4 Required ~ 2 Pairs)

PIECE D-3
(4 Required ~ 2 Pairs)

℄ Beam (WWR
Symmetrical)

LEGEND:
EF = Each Face
FF = Front Face
BF = Back Face

NOTES:

a. See Sheet 1 for placement details & Table of Beam Variables in Structures Plans for variables S1, S2, S3, S4 & V1.
b. Place Conventional Reinforcement Bars 5A & 3C as shown on Sheet 1. Place additional Bars 5Y as shown in Section A-A for Welded Wire Reinforcement. Bars 5Z will not be used with the WWR Option.
c. Pieces may be fabricated in multiple length sections.
d. For beams with skewed end conditions, Pieces D-1, D-2 & M-1 shall not be used; Conventional Reinforcement Bars D1, D2, C1, C2, M1 & M2 shall be used. See Index No. 20010 Skew Details and Note 9 for placement details. Shift Pieces K & Bars 5Y to accommodate skewed end conditions and align with Bars C and D.

C:\d\projects\standards\structures\2013book\20036-2of2.dgn
rd960rh
2:22:01 PM
6/28/2012

LAST REVISION	REVISION	DESCRIPTION:			INDEX NO.	SHEET NO.
07/01/10			FDOT DESIGN STANDARDS 2013	FLORIDA-I 36 BEAM - STANDARD DETAILS	20036	2

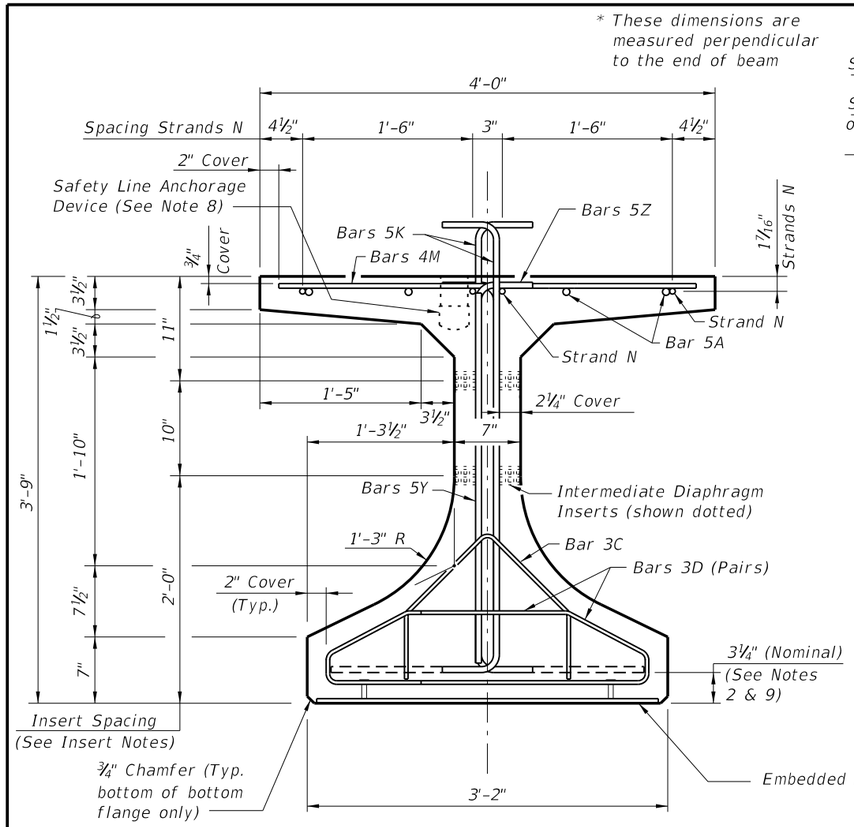

END VIEW

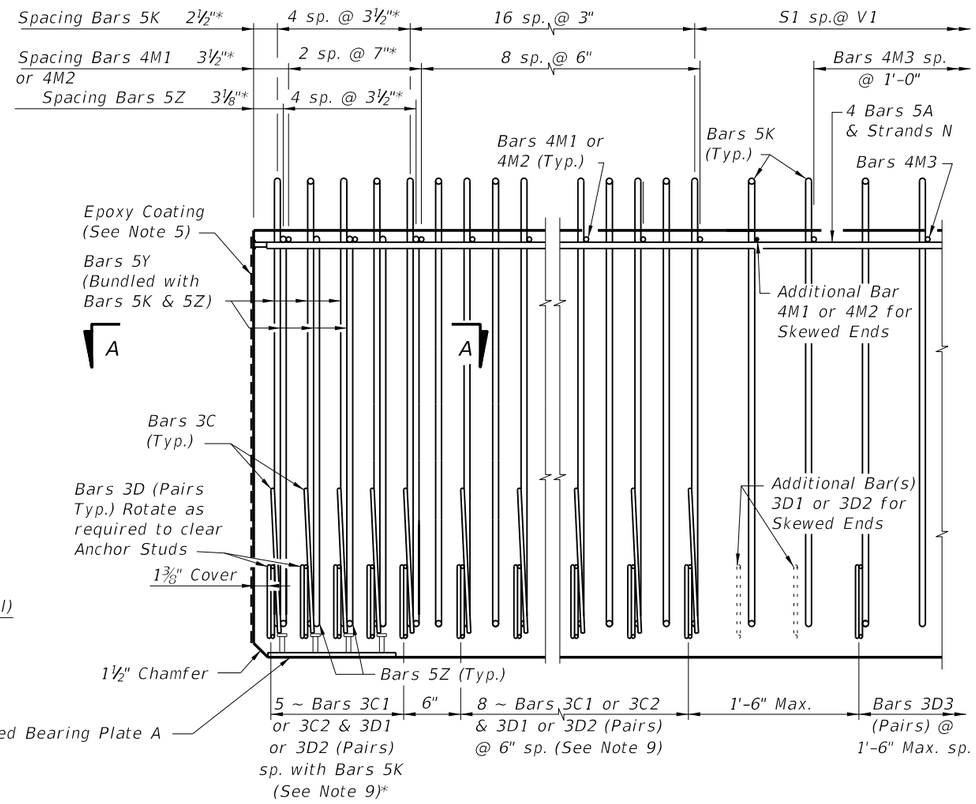

ELEVATION AT END OF BEAM
(Flanges Not Shown For Clarity)
(End 1 Shown, End 2 Similar)

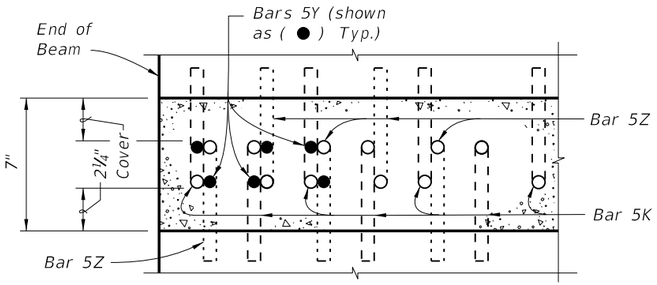

SECTION A-A FOR CONVENTIONAL REINFORCING
(Showing Bars 5K, 5Y & 5Z Only)

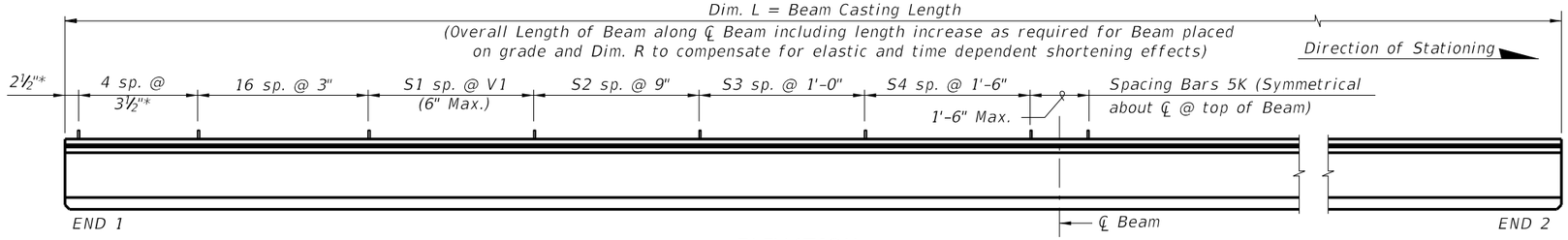

ELEVATION

CONVENTIONAL REINFORCING BAR BENDING DETAILS

BILL OF REINFORCING STEEL

MARK	NOTE NUMBERS	SIZE	NUMBER REQUIRED	LENGTH (NOTE 1)
A	—	5	8	19'-0"
C1	9, 10 & 11	3	13 (End 1)	Varies
C2	9, 10 & 11	3	13 (End 2)	Varies
D1	9, 10, 11 & 14	3	26 (End 1)	Varies
D2	9, 10, 11 & 14	3	26 (End 2)	Varies
D3	9 & 14	3	See Table	4'-3"
K	2, 9, 11 & 13	5	See Table	4'-11"
M1	9 & 10	4	11 (End 1)	Varies
M2	9 & 10	4	11 (End 2)	Varies
M3	9	4	See Table	3'-8"
N	3 & 4	⅜" Ø Strand	4	Dim. L
Y	9 & 11	5	12	3'-3"
Z	2, 9, 11 & 13	5	10	4'-5"

BENDING DIAGRAMS (See Note 1)

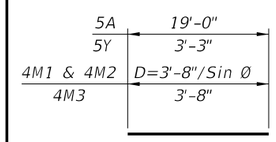

BARS 5A, 4M1, 4M2, 4M3 & 5Y

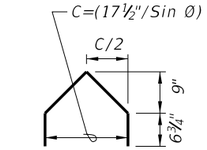

BARS 3C1 & 3C2

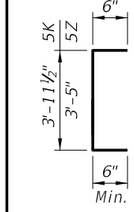

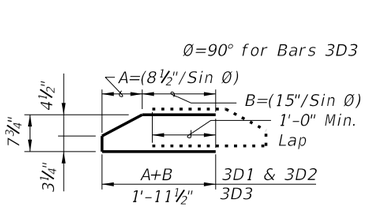

BARS 5K & 5Z BARS 3D1, 3D2 & 3D3

NOTES:
A. Work this Index with Index No. 20010 – Typical Florida-I Beam Details and Notes and the Florida-I Beam – Table of Beam Variables in Structures Plans.
B. For referenced notes, see Index No. 20010.
C. For Dimensions A, B, C, D, L, R & V1 and number of spaces S1 thru S4, see Florida-I Beam – Table of Beam Variables in Structures Plans.

C:\d\projects\standards\structures\2013book\20045-1of2.dgn rd960rh 2:22:04 PM 6/28/2012

LAST REVISION	REVISION	DESCRIPTION:				
07/01/12			FDOT DESIGN STANDARDS 2013	FLORIDA-I 45 BEAM - STANDARD DETAILS	INDEX NO. 20045	SHEET NO. 1

ALTERNATE REINFORCING STEEL (WELDED WIRE REINFORCEMENT) DETAILS

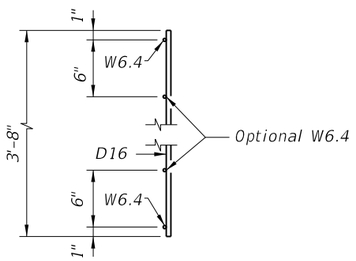

PIECES M
END VIEW

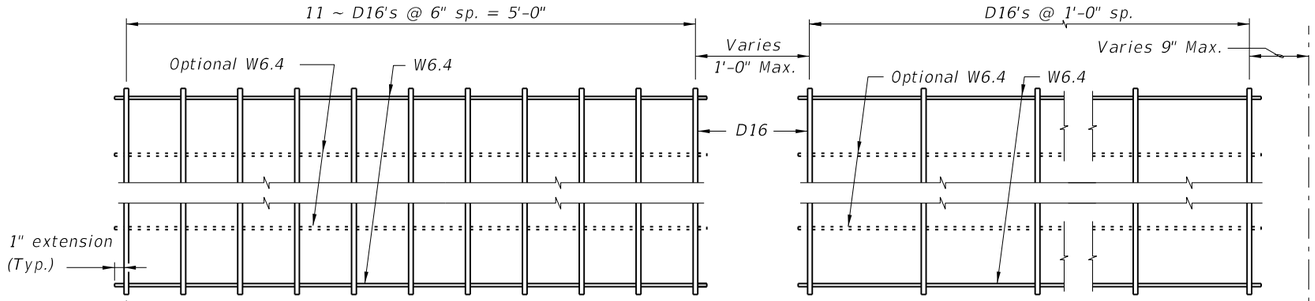

PLAN VIEW
PIECE M-1
(2 Required)

PLAN VIEW
PIECE M-3
(2 Required)

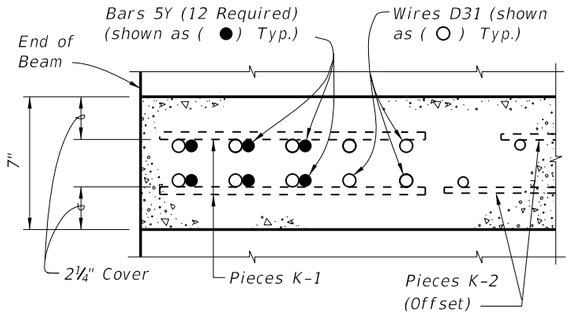

SECTION A-A
FOR WELDED WIRE REINFORCEMENT

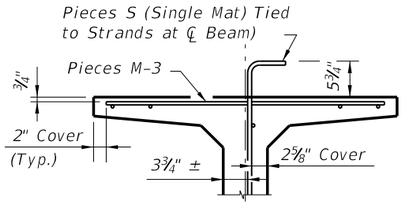

PARTIAL SECTION AT CENTER BEAM

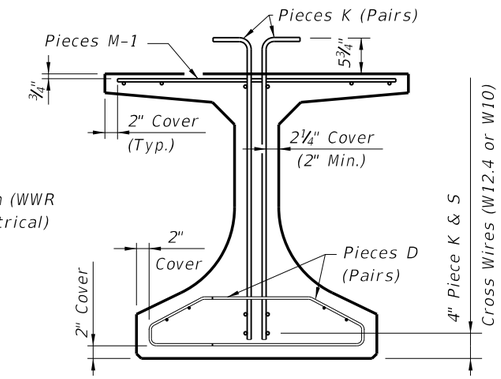

PARTIAL BEAM END VIEW
(Conventional Reinforcing Bars A, C, Y
and Strands not Shown for Clarity)

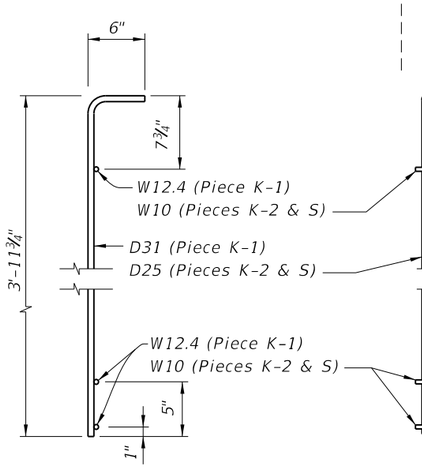

PIECES K & S
END VIEW

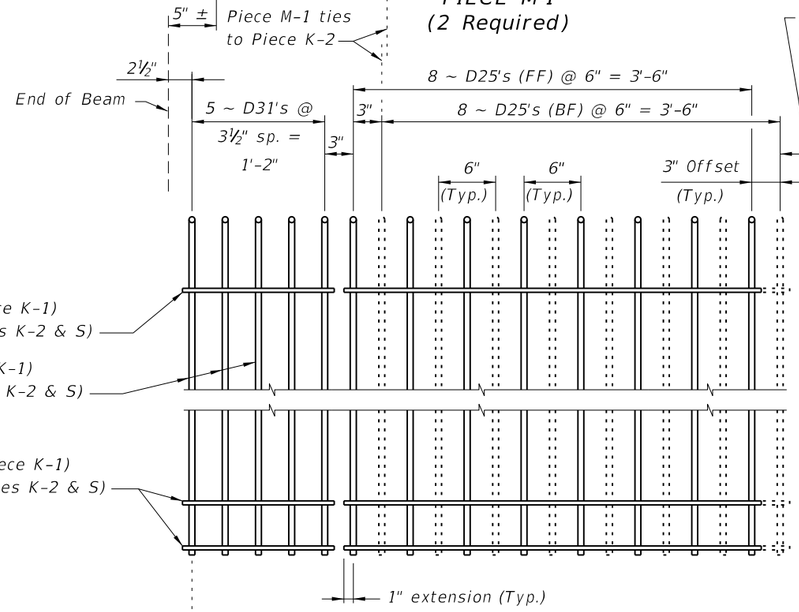

PIECE K-1
(Aligned EF)
(4 Required
~ 2 Pairs)

PIECE K-2
(FF Shown Solid, BF Shown Dashed)
(4 Required)

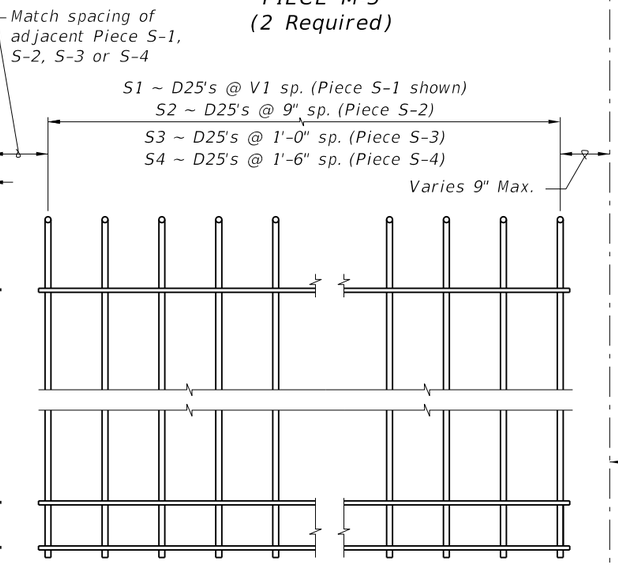

PIECE S-1, S-2, S-3 or S-4
(2 Required Each Piece)

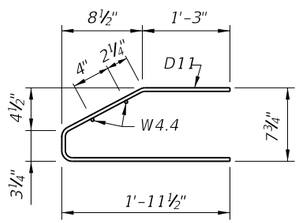

PIECES D
END VIEW

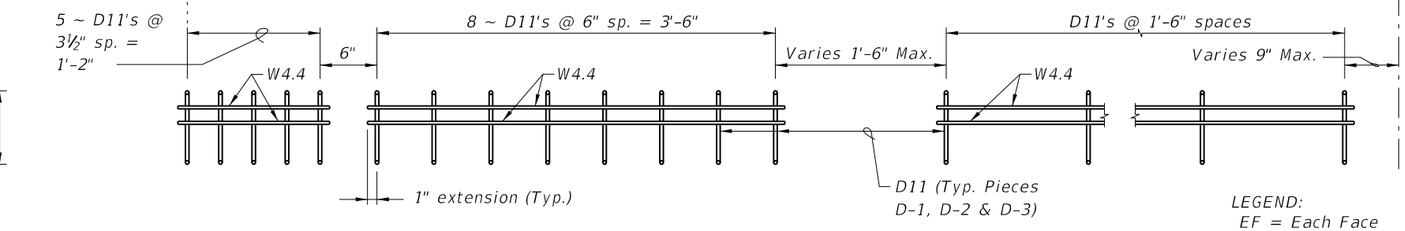

PIECE D-1
(4 Required ~ 2 Pairs)

PIECE D-2
(4 Required ~ 2 Pairs)

PIECE D-3
(4 Required ~ 2 Pairs)

LEGEND:
EF = Each Face
FF = Front Face
BF = Back Face

NOTES:

a. See Sheet 1 for placement details & Table of Beam Variables in Structures Plans for variables S1, S2, S3, S4 & V1.
b. Place Conventional Reinforcement Bars 5A & 3C as shown on Sheet 1. Place additional Bars 5Y as shown in Section A-A for Welded Wire Reinforcement. Bars 5Z will not be used with the WWR Option.
c. Pieces may be fabricated in multiple length sections.
d. For beams with skewed end conditions, Pieces D-1, D-2 & M-1 shall not be used; Conventional Reinforcement Bars D1, D2, C1, C2, M1 & M2 shall be used. See Index No. 20010 Skew Details and Note 9 for placement details. Shift Pieces K & Bars 5Y to accommodate skewed end conditions and align with Bars C and D.

LAST REVISION	REVISION	DESCRIPTION:				
07/01/10			FDOT DESIGN STANDARDS 2013	FLORIDA-I 45 BEAM - STANDARD DETAILS	INDEX NO. 20045	SHEET NO. 2

C:\d\projects\standards\structures\2013book\20045-2of2.dgn rd960rh 2:22:06 PM 6/28/2012

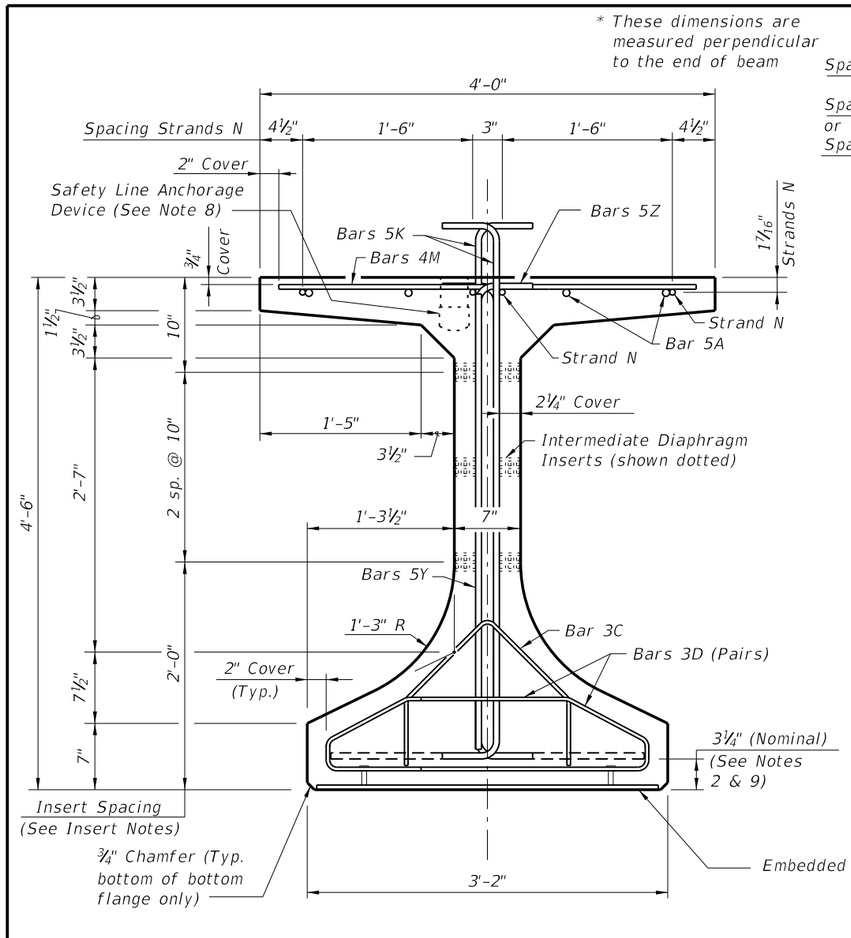

END VIEW

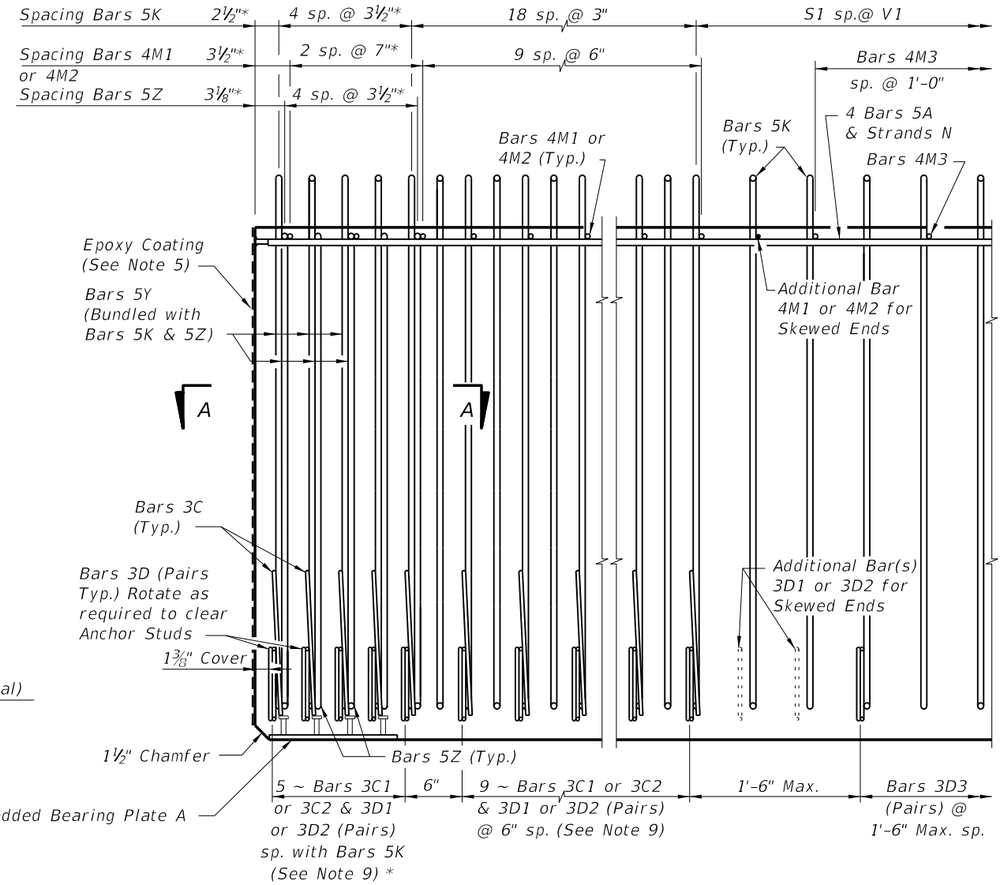

ELEVATION AT END OF BEAM
(Flanges Not Shown For Clarity)
(End 1 Shown, End 2 Similar)

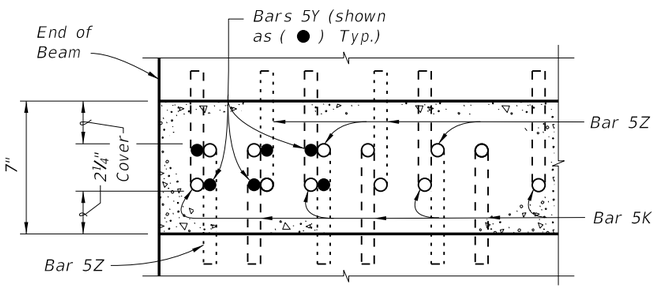

SECTION A-A FOR CONVENTIONAL REINFORCING
(Showing Bars 5K, 5Y & 5Z Only)

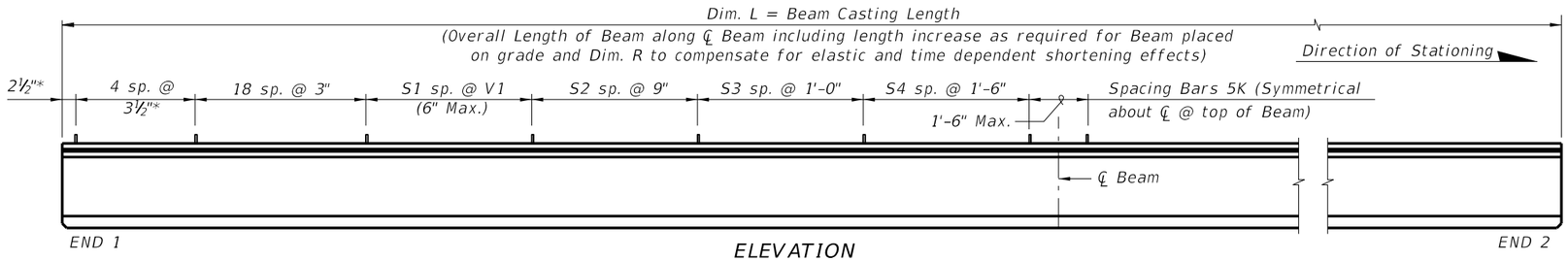

ELEVATION

CONVENTIONAL REINFORCING BAR BENDING DETAILS

BILL OF REINFORCING STEEL

MARK	NOTE NUMBERS	SIZE	NUMBER REQUIRED	LENGTH (NOTE 1)
A	—	5	8	22'-0"
C1	9, 10 & 11	3	14 (End 1)	Varies
C2	9, 10 & 11	3	14 (End 2)	Varies
D1	9, 10, 11 & 14	3	28 (End 1)	Varies
D2	9, 10, 11 & 14	3	28 (End 2)	Varies
D3	9 & 14	3	See Table	4'-3"
K	2, 9, 11 & 13	5	See Table	5'-8"
M1	9 & 10	4	12 (End 1)	Varies
M2	9 & 10	4	12 (End 2)	Varies
M3	9	4	See Table	3'-8"
N	3 & 4	⅜" Ø Strand	4	Dim. L
Y	9 & 11	5	12	4'-0"
Z	2, 9, 11 & 13	5	10	5'-2"

BENDING DIAGRAMS (See Note 1)

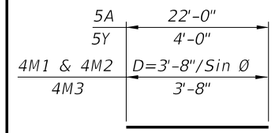

BARS 5A, 4M1, 4M2, 4M3 & 5Y

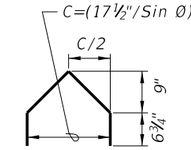

BARS 3C1 & 3C2

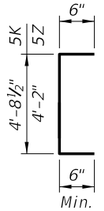

BARS 5K & 5Z

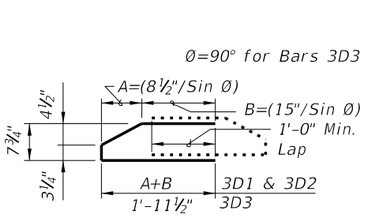

BARS 3D1, 3D2 & 3D3

NOTES:
A. Work this Index with Index No. 20010 – Typical Florida-I Beam Details and Notes and the Florida-I Beam – Table of Beam Variables in Structures Plans.
B. For referenced notes, see Index No. 20010.
C. For Dimensions A, B, C, D, L, R & V1 and number of spaces S1 thru S4, see Florida-I Beam – Table of Beam Variables in Structures Plans.

C:\d\projects\standards\structures\2013book\20054-1of2.dgn
rd960rh
2:22:08 PM
6/28/2012

LAST REVISION	REVISION	DESCRIPTION:				
07/01/12			FDOT DESIGN STANDARDS 2013	FLORIDA-I 54 BEAM - STANDARD DETAILS	INDEX NO. 20054	SHEET NO. 1

ALTERNATE REINFORCING STEEL (WELDED WIRE REINFORCEMENT) DETAILS

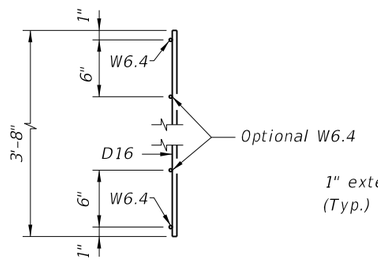

PIECES M
END VIEW

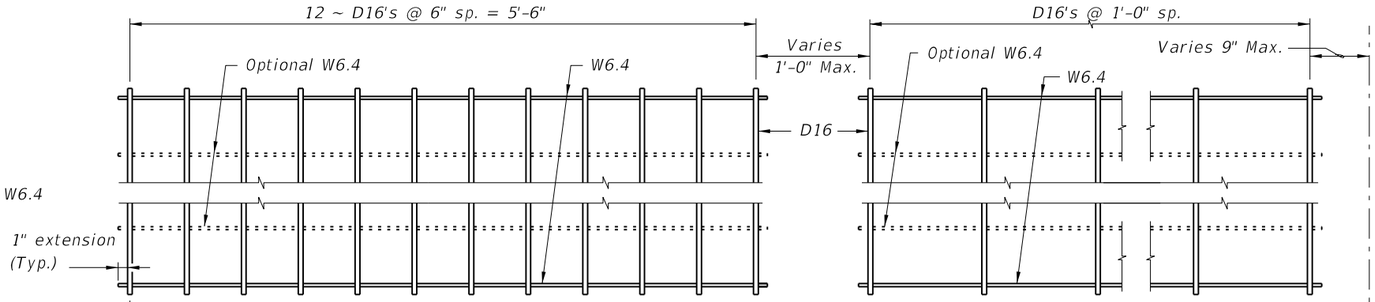

PLAN VIEW
PIECE M-1
(2 Required)

PLAN VIEW
PIECE M-3
(2 Required)

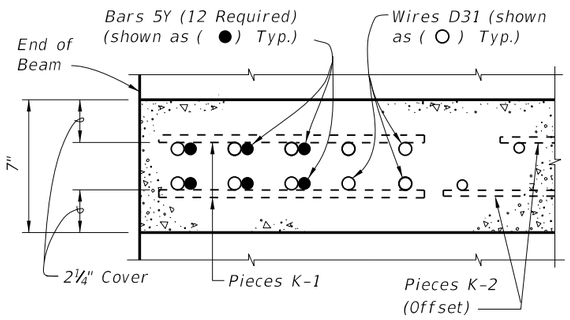

SECTION A-A
FOR WELDED WIRE REINFORCEMENT

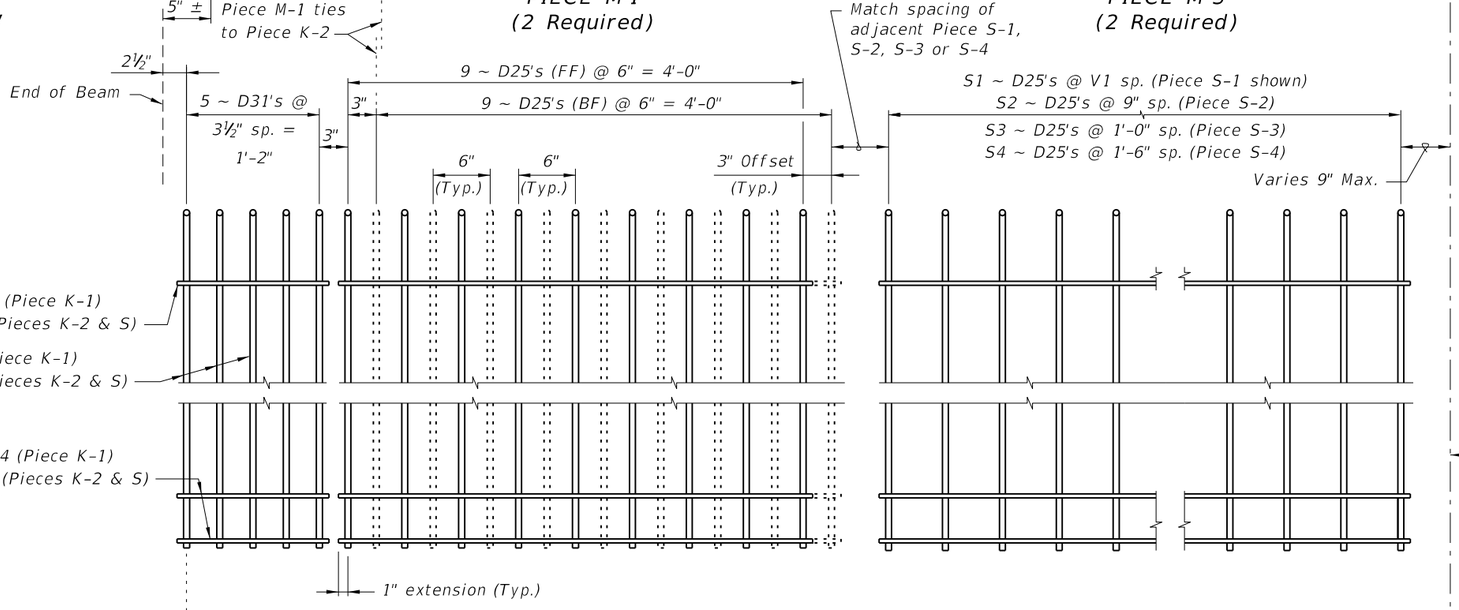

PIECES K & S
END VIEW

PIECE K-1
(Aligned EF)
(4 Required
~ 2 Pairs)

PIECE K-2
(FF Shown Solid, BF Shown Dashed)
(4 Required)

PIECE S-1, S-2, S-3 or S-4
(2 Required Each Piece)

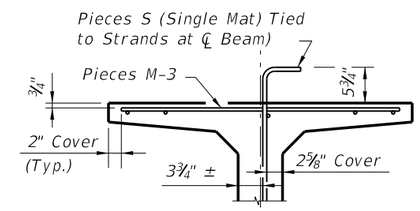

PARTIAL SECTION AT CENTER BEAM

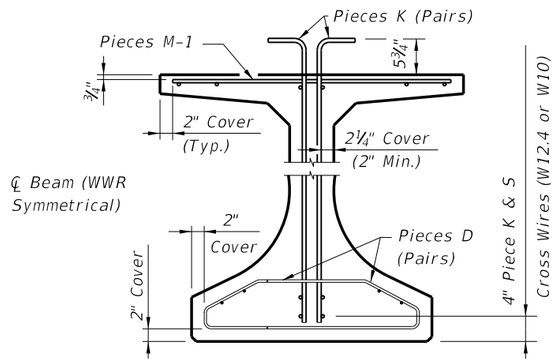

PARTIAL BEAM END VIEW
(Conventional Reinforcing Bars A, C, Y
and Strands not Shown for Clarity)

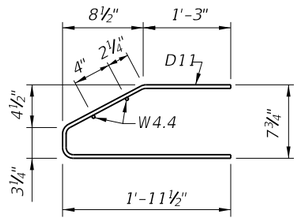

PIECES D
END VIEW

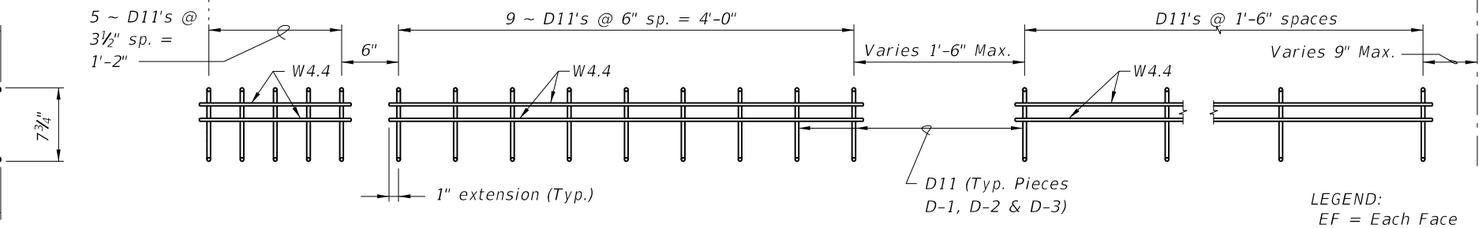

PIECE D-1
(4 Required ~ 2 Pairs)

PIECE D-2
(4 Required ~ 2 Pairs)

PIECE D-3
(4 Required ~ 2 Pairs)

LEGEND:
EF = Each Face
FF = Front Face
BF = Back Face

NOTES:

a. See Sheet 1 for placement details & Table of Beam Variables in Structures Plans for variables S1, S2, S3, S4 & V1.
b. Place Conventional Reinforcement Bars 5A & 3C as shown on Sheet 1. Place additional Bars 5Y as shown in Section A-A for Welded Wire Reinforcement. Bars 5Z will not be used with the WWR Option.
c. Pieces may be fabricated in multiple length sections.
d. For beams with skewed end conditions, Pieces D-1, D-2 & M-1 shall not be used; Conventional Reinforcement Bars D1, D2, C1, C2, M1 & M2 shall be used. See Index No. 20010 Skew Details and Note 9 for placement details. Shift Pieces K & Bars 5Y to accommodate skewed end conditions and align with Bars C and D.

C:\d\projects\standards\structures\2013book\20054-2of2.dgn
rd960rh
2:22:10 PM
6/28/2012

LAST REVISION	REVISION	DESCRIPTION:				
07/01/10			FDOT DESIGN STANDARDS 2013	FLORIDA-I 54 BEAM - STANDARD DETAILS	INDEX NO. 20054	SHEET NO. 2

* These dimensions are measured perpendicular to the end of beam

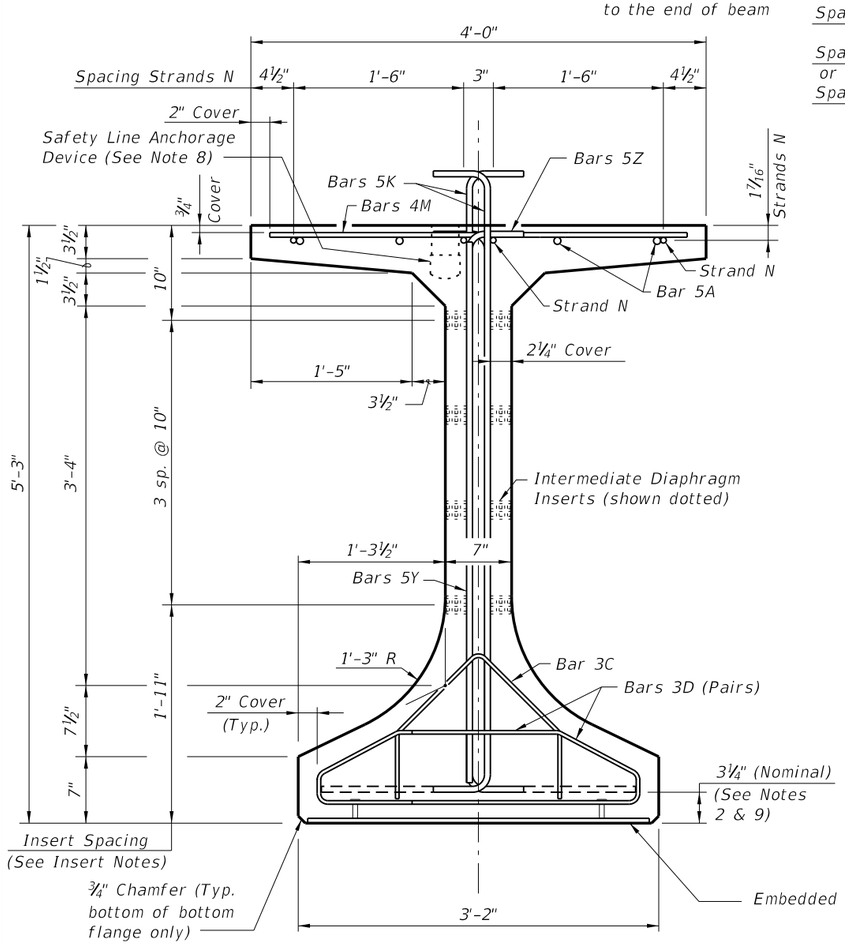

END VIEW

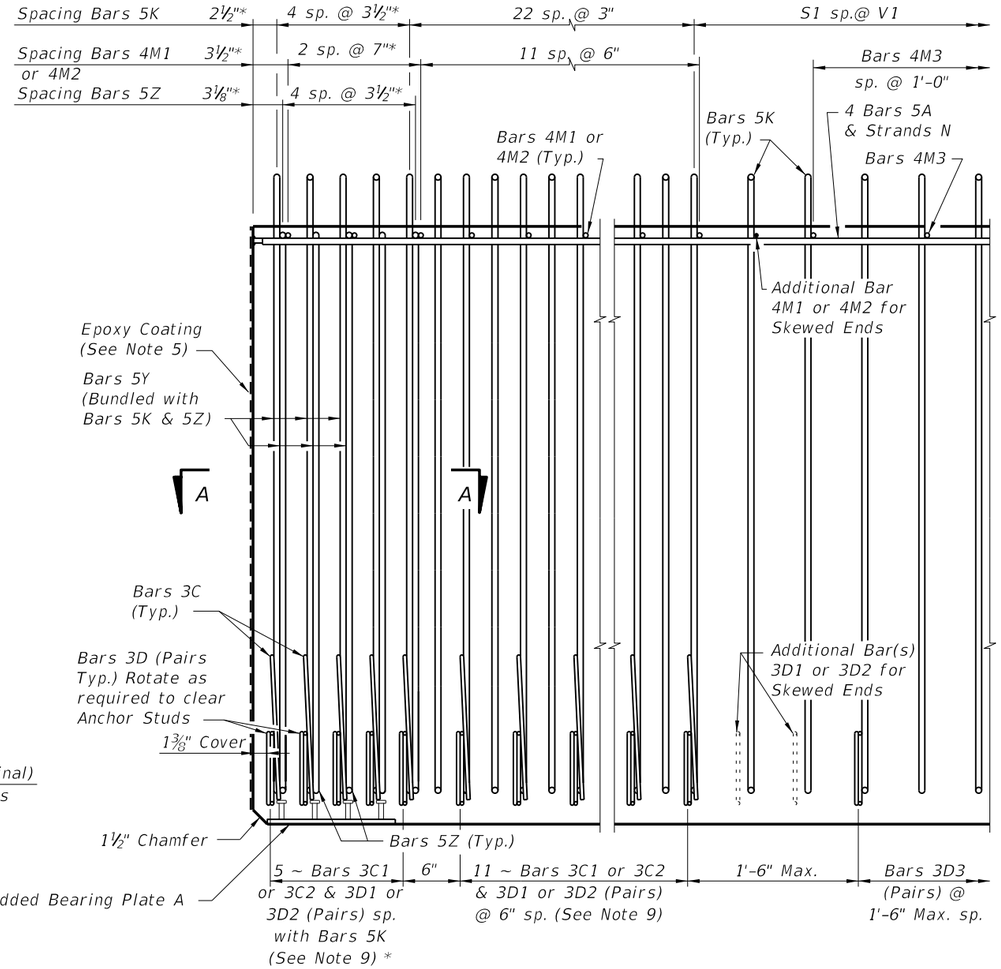

ELEVATION AT END OF BEAM
(Flanges Not Shown For Clarity)
(End 1 Shown, End 2 Similar)

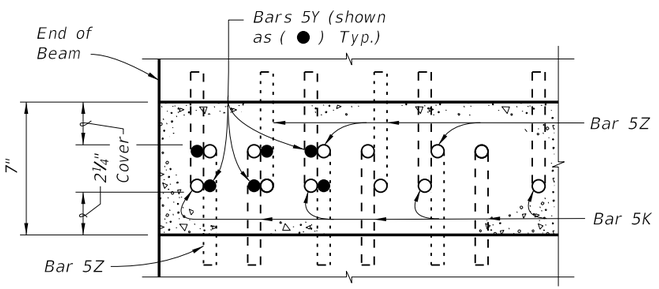

SECTION A-A FOR CONVENTIONAL REINFORCING
(Showing Bars 5K, 5Y & 5Z Only)

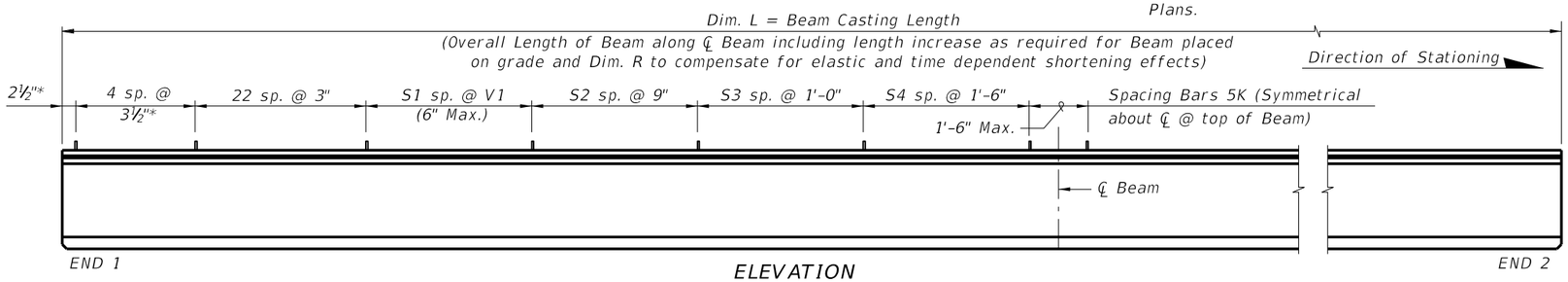

ELEVATION

CONVENTIONAL REINFORCING BAR BENDING DETAILS

BILL OF REINFORCING STEEL

MARK	NOTE NUMBERS	SIZE	NUMBER REQUIRED	LENGTH (NOTE 1)
A	—	5	8	24'-0"
C1	9, 10 & 11	3	16 (End 1)	Varies
C2	9, 10 & 11	3	16 (End 2)	Varies
D1	9, 10, 11 & 14	3	32 (End 1)	Varies
D2	9, 10, 11 & 14	3	32 (End 2)	Varies
D3	9 & 14	3	See Table	4'-3"
K	2, 9, 11 & 13	5	See Table	6'-5"
M1	9 & 10	4	14 (End 1)	Varies
M2	9 & 10	4	14 (End 2)	Varies
M3	9	4	See Table	3'-8"
N	3 & 4	⅜" Ø Strand	4	Dim. L
Y	9 & 11	5	12	4'-9"
Z	2, 9, 11 & 13	5	10	5'-11"

BENDING DIAGRAMS (See Note 1)

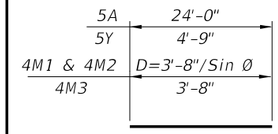

BARS 5A, 4M1, 4M2, 4M3 & 5Y

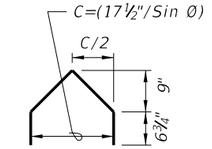

BARS 3C1 & 3C2

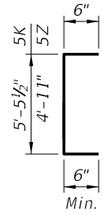

BARS 5K & 5Z

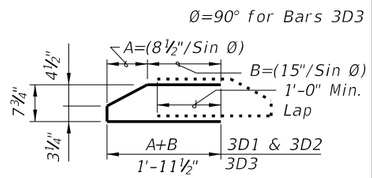

BARS 3D1, 3D2 & 3D3

NOTES:

A. Work this Index with Index No. 20010 – Typical Florida-I Beam Details and Notes and the Florida-I Beam – Table of Beam Variables in Structures Plans.
B. For referenced notes, see Index No. 20010.
C. For Dimensions A, B, C, D, L, R & V1 and number of spaces S1 thru S4, see Florida-I Beam – Table of Beam Variables in Structures Plans.

LAST REVISION	REVISION	DESCRIPTION:				
07/01/12			FDOT DESIGN STANDARDS 2013	FLORIDA-I 63 BEAM - STANDARD DETAILS	INDEX NO. 20063	SHEET NO. 1

C:\d\projects\standards\structures\2013book\20063-1of2.dgn
rd960rh
2:22:13 PM
6/28/2012

ALTERNATE REINFORCING STEEL (WELDED WIRE REINFORCEMENT) DETAILS

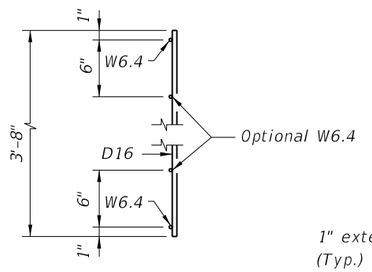

PIECES M
END VIEW

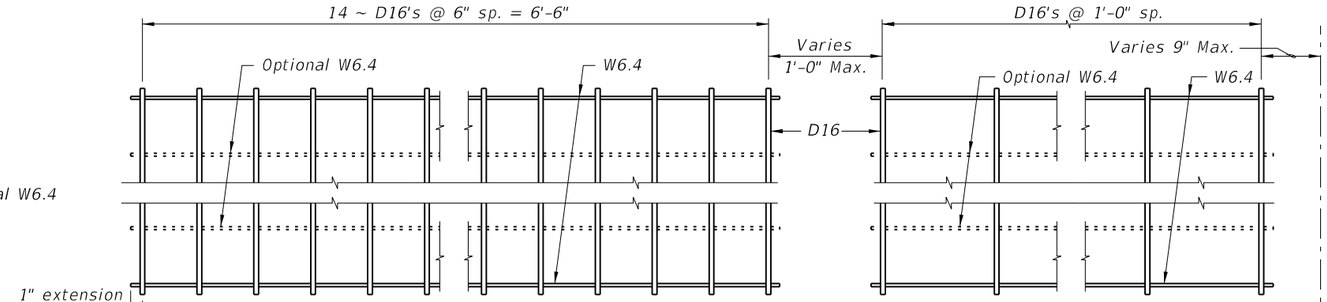

PLAN VIEW
PIECE M-1
(2 Required)

PLAN VIEW
PIECE M-3
(2 Required)

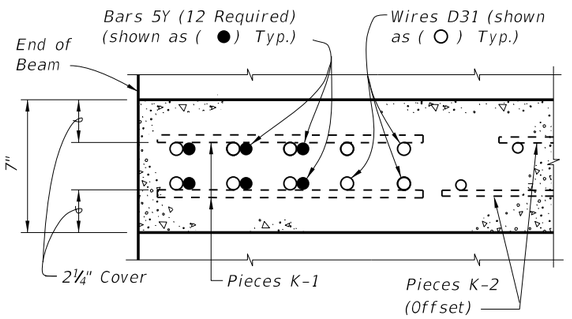

SECTION A-A
FOR WELDED WIRE REINFORCEMENT

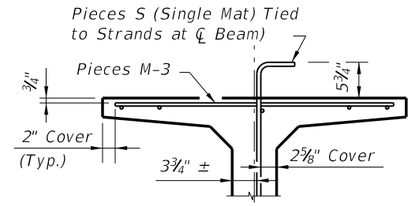

PARTIAL SECTION AT CENTER BEAM

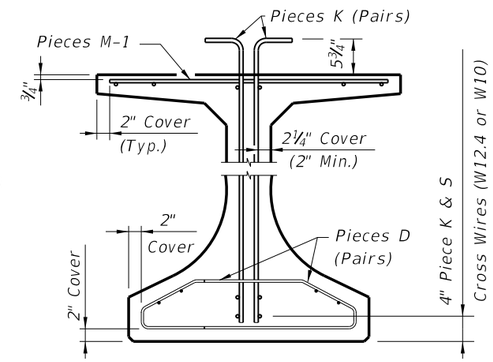

PARTIAL BEAM END VIEW
(Conventional Reinforcing Bars A, C, Y
and Strands not Shown for Clarity)

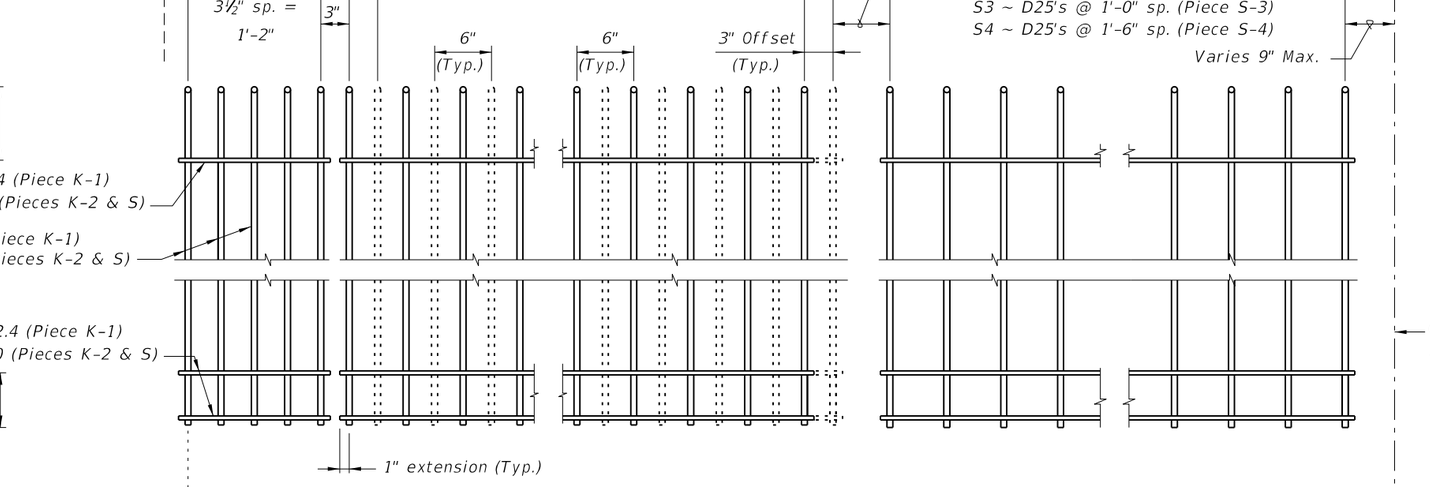

PIECES K & S
END VIEW

PIECE K-1
(Aligned EF)
(4 Required
~ 2 Pairs)

PIECE K-2
(FF Shown Solid, BF Shown Dashed)
(4 Required)

PIECE S-1, S-2, S-3 or S-4
(2 Required Each Piece)

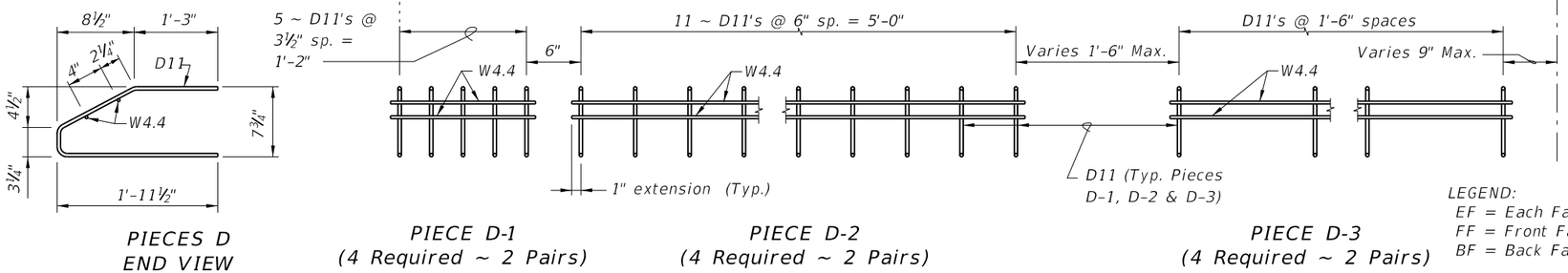

PIECES D
END VIEW

PIECE D-1
(4 Required ~ 2 Pairs)

PIECE D-2
(4 Required ~ 2 Pairs)

PIECE D-3
(4 Required ~ 2 Pairs)

LEGEND:
EF = Each Face
FF = Front Face
BF = Back Face

NOTES:

a. See Sheet 1 for placement details & Table of Beam Variables in Structures Plans for variables S1, S2, S3, S4 & V1.
b. Place Conventional Reinforcement Bars 5A & 3C as shown on Sheet 1. Place additional Bars 5Y as shown in Section A-A for Welded Wire Reinforcement. Bars 5Z will not be used with the WWR Option.
c. Pieces may be fabricated in multiple length sections.
d. For beams with skewed end conditions, Pieces D-1, D-2 & M-1 shall not be used; Conventional Reinforcement Bars D1, D2, C1, C2, M1 & M2 shall be used. See Index No. 20010 Skew Details and Note 9 for placement details. Shift Pieces K & Bars 5Y to accommodate skewed end conditions and align with Bars C and D.

C:\dv\projects\standards\structures\2013book\20063-2of2.dgn rd960rh 2:22:15 PM 6/28/2012

* These dimensions are measured perpendicular to the end of beam

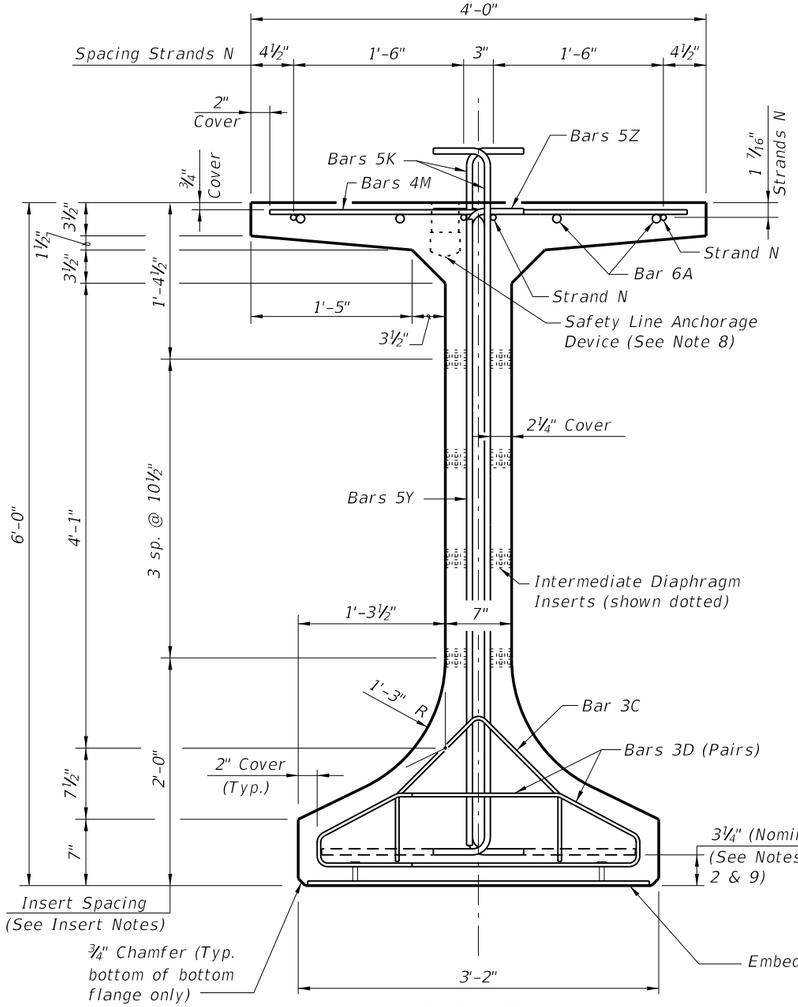

END VIEW

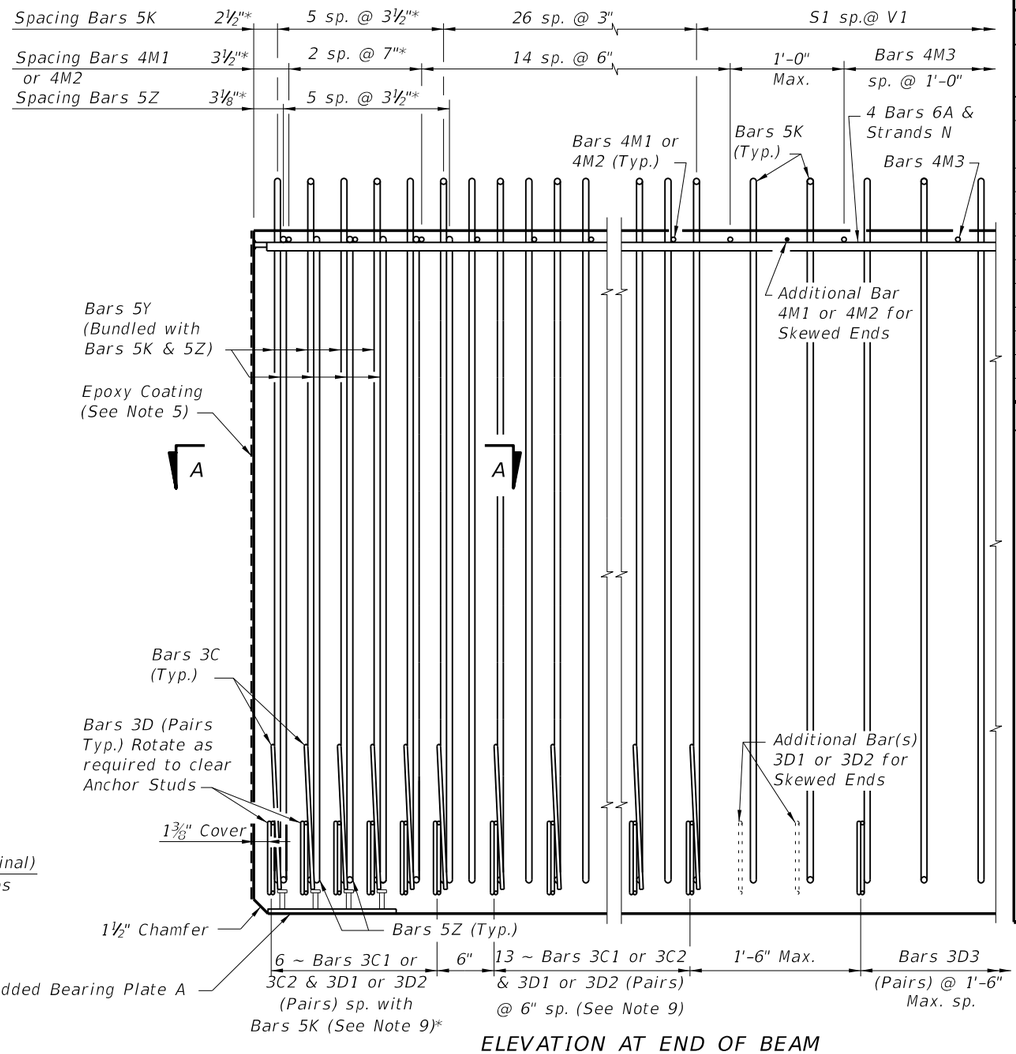

ELEVATION AT END OF BEAM
(Flanges Not Shown For Clarity)
(End 1 Shown, End 2 Similar)

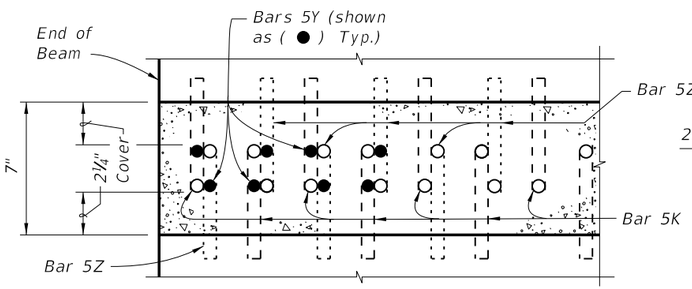

SECTION A-A FOR CONVENTIONAL REINFORCING
(Showing Bars 5K, 5Y & 5Z Only)

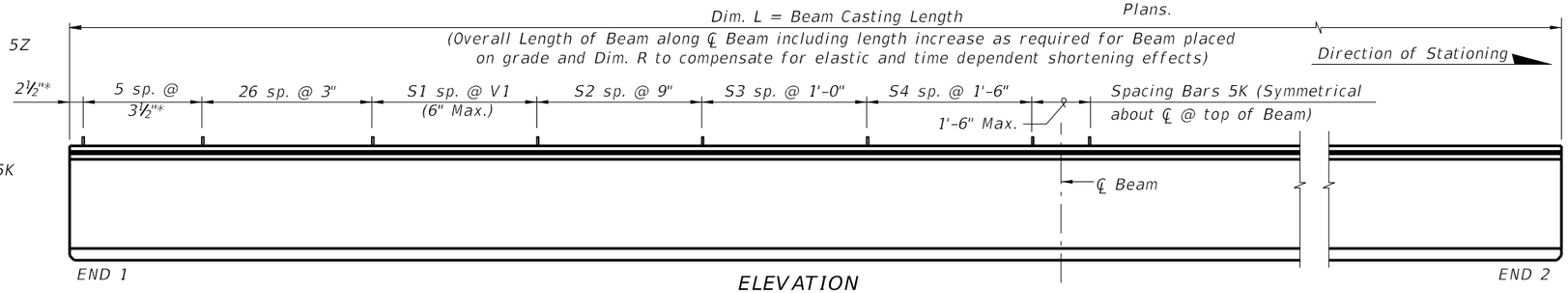

ELEVATION

CONVENTIONAL REINFORCING BAR BENDING DETAILS

BILL OF REINFORCING STEEL

MARK	NOTE NUMBERS	SIZE	NUMBER REQUIRED	LENGTH (NOTE 1)
A	—	6	8	26'-0"
C1	9, 10 & 11	3	19 (End 1)	Varies
C2	9, 10 & 11	3	19 (End 2)	Varies
D1	9, 10, 11 & 14	3	38 (End 1)	Varies
D2	9, 10, 11 & 14	3	38 (End 2)	Varies
D3	9 & 14	3	See Table	4'-3"
K	2, 9, 11 & 13	5	See Table	7'-2"
M1	9 & 10	4	17 (End 1)	Varies
M2	9 & 10	4	17 (End 2)	Varies
M3	9	4	See Table	3'-8"
N	3 & 4	⅜" Ø Strand	4	Dim. L
Y	9 & 11	5	16	5'-6"
Z	2, 9, 11 & 13	5	12	6'-8"

BENDING DIAGRAMS (See Note 1)

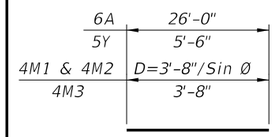

BARS 6A, 4M1, 4M2, 4M3 & 5Y

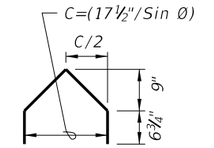

BARS 3C1 & 3C2

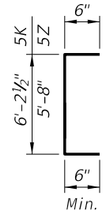

BARS 5K & 5Z

Ø=90° for Bars 3D3

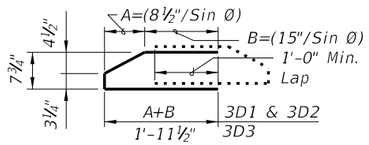

BARS 3D1, 3D2 & 3D3

NOTES:

A. Work this Index with Index No. 20010 – Typical Florida-I Beam Details and Notes and the Florida-I Beam – Table of Beam Variables in Structures Plans.
B. For referenced notes, see Index No. 20010.
C. For Dimensions A, B, C, D, L, R & V1 and number of spaces S1 thru S4, see Florida-I Beam – Table of Beam Variables in Structures Plans.

C:\d\projects\standards\structures\2013book\20072-1of2.dgn rd960rh 2:22:17 PM 6/28/2012

LAST REVISION	REVISION	DESCRIPTION:			INDEX NO.	SHEET NO.
07/01/12			FDOT DESIGN STANDARDS 2013	FLORIDA-I 72 BEAM - STANDARD DETAILS	20072	1

ALTERNATE REINFORCING STEEL (WELDED WIRE REINFORCEMENT) DETAILS

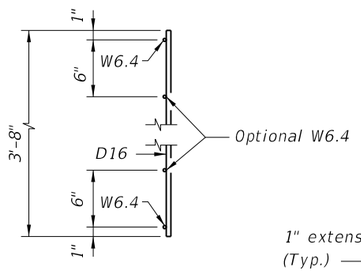

PIECES M
END VIEW

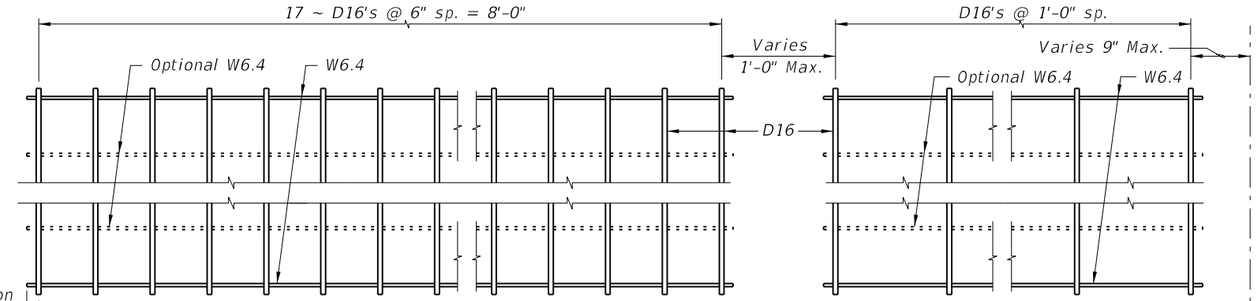

PLAN VIEW
PIECE M-1
(2 Required)

PLAN VIEW
PIECE M-3
(2 Required)

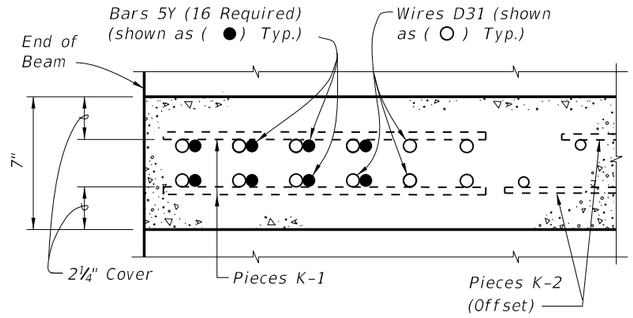

SECTION A-A
FOR WELDED WIRE REINFORCEMENT

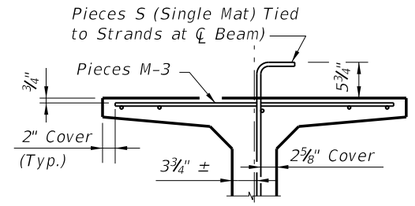

PARTIAL SECTION AT CENTER BEAM

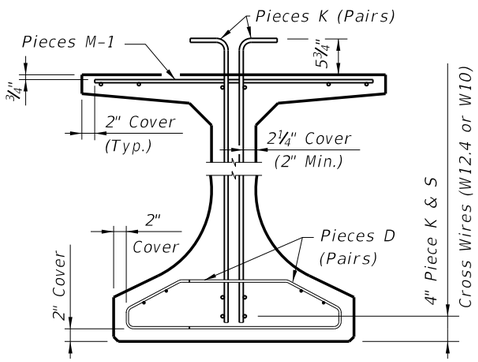

PARTIAL BEAM END VIEW
(Conventional Reinforcing Bars A, C, Y
and Strands not Shown for Clarity)

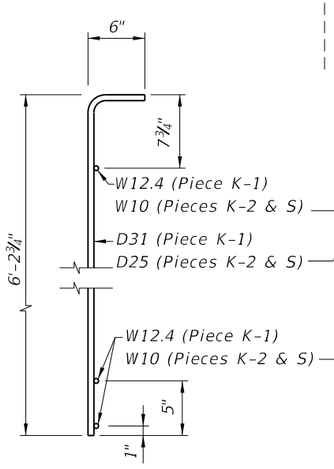

PIECES K & S
END VIEW

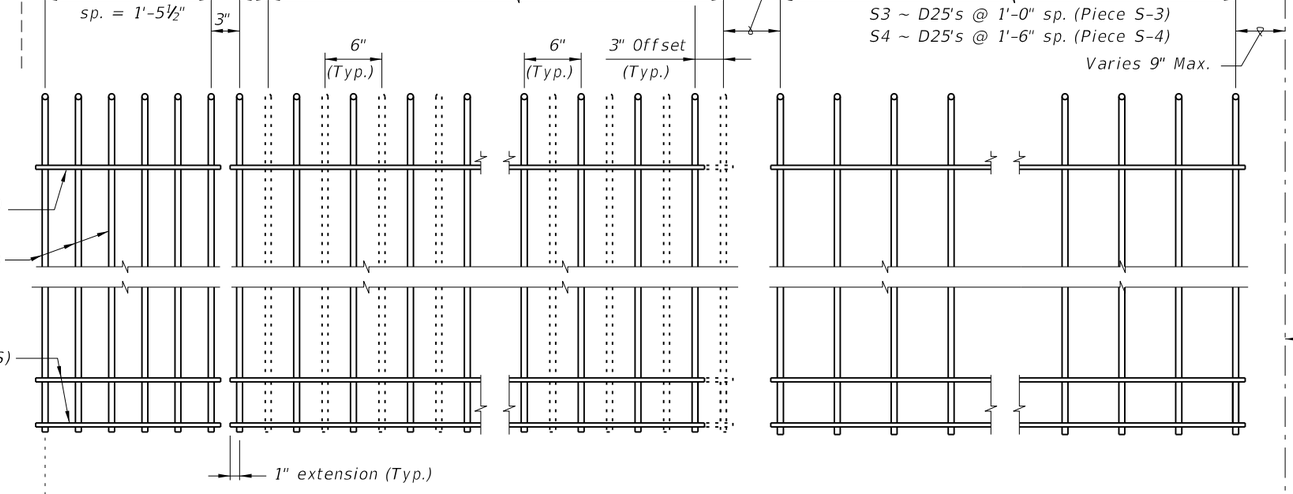

PIECE K-1
(Aligned EF)
(4 Required
~ 2 Pairs)

PIECE K-2
(FF Shown Solid, BF Shown Dashed)
(4 Required)

PIECE S-1, S-2, S-3 or S-4
(2 Required ~ Each Piece)

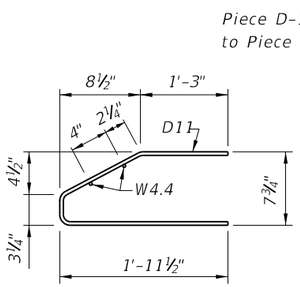

PIECES D
END VIEW

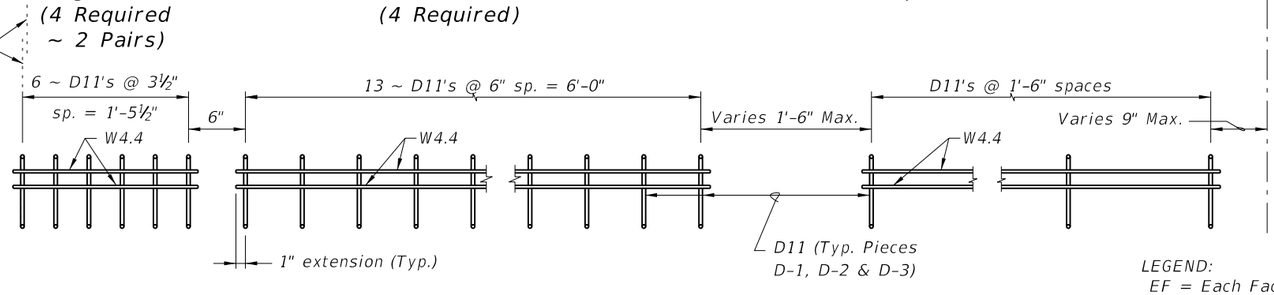

PIECE D-1
(4 Required ~ 2 Pairs)

PIECE D-2
(4 Required ~ 2 Pairs)

PIECE D-3
(4 Required ~ 2 Pairs)

LEGEND:
EF = Each Face
FF = Front Face
BF = Back Face

NOTES:

a. See Sheet 1 for placement details & Table of Beam Variables in Structures Plans for variables S1, S2, S3, S4 & V1.
b. Place Conventional Reinforcement Bars 6A & 3C as shown on Sheet 1. Place additional Bars 5Y as shown in Section A-A for Welded Wire Reinforcement. Bars 5Z will not be used with the WWR Option.
c. Pieces may be fabricated in multiple length sections.
d. For beams with skewed end conditions, Pieces D-1, D-2 & M-1 shall not be used; Conventional Reinforcement Bars D1, D2, C1, C2, M1 & M2 shall be used. See Index No. 20010 Skew Details and Note 9 for placement details. Shift Pieces K & Bars 5Y to accommodate skewed end conditions and align with Bars C and D.

LAST REVISION	REVISION	DESCRIPTION:				
07/01/10			FDOT DESIGN STANDARDS 2013	FLORIDA-I 72 BEAM - STANDARD DETAILS	INDEX NO. 20072	SHEET NO. 2

C:\d\projects\standards\structures\2013book\20072-2of2.dgn rd960rh 2:22:19 PM 6/28/2012

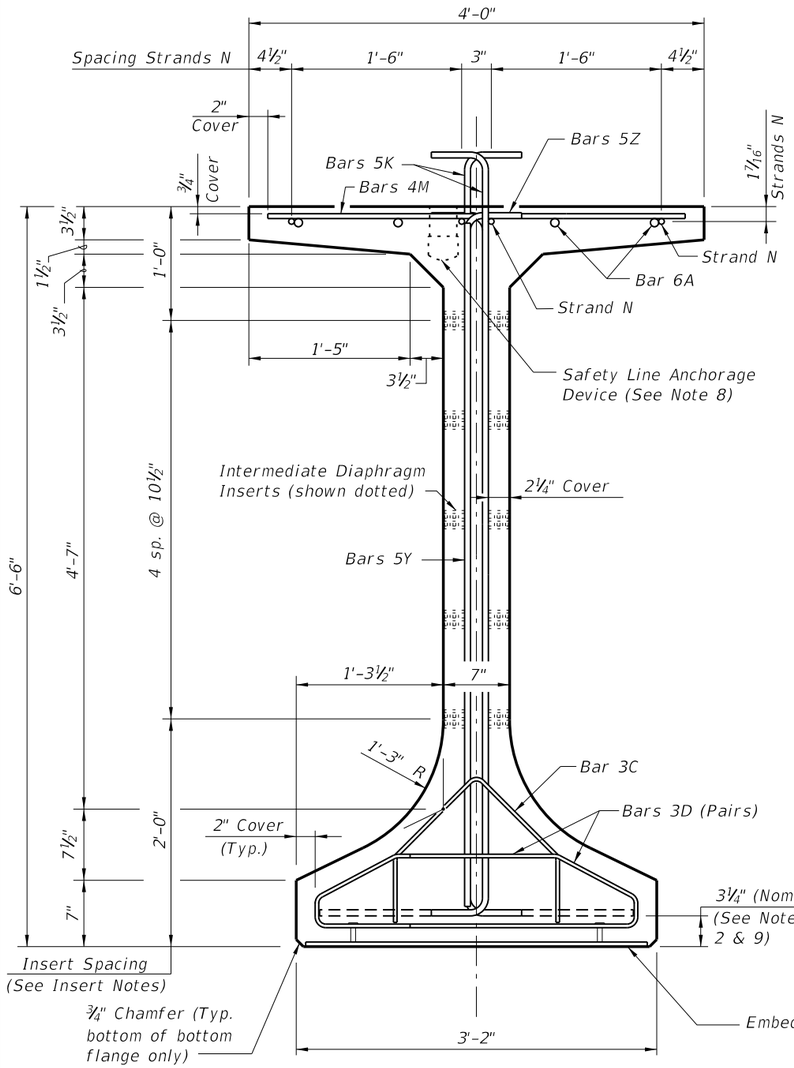

END VIEW

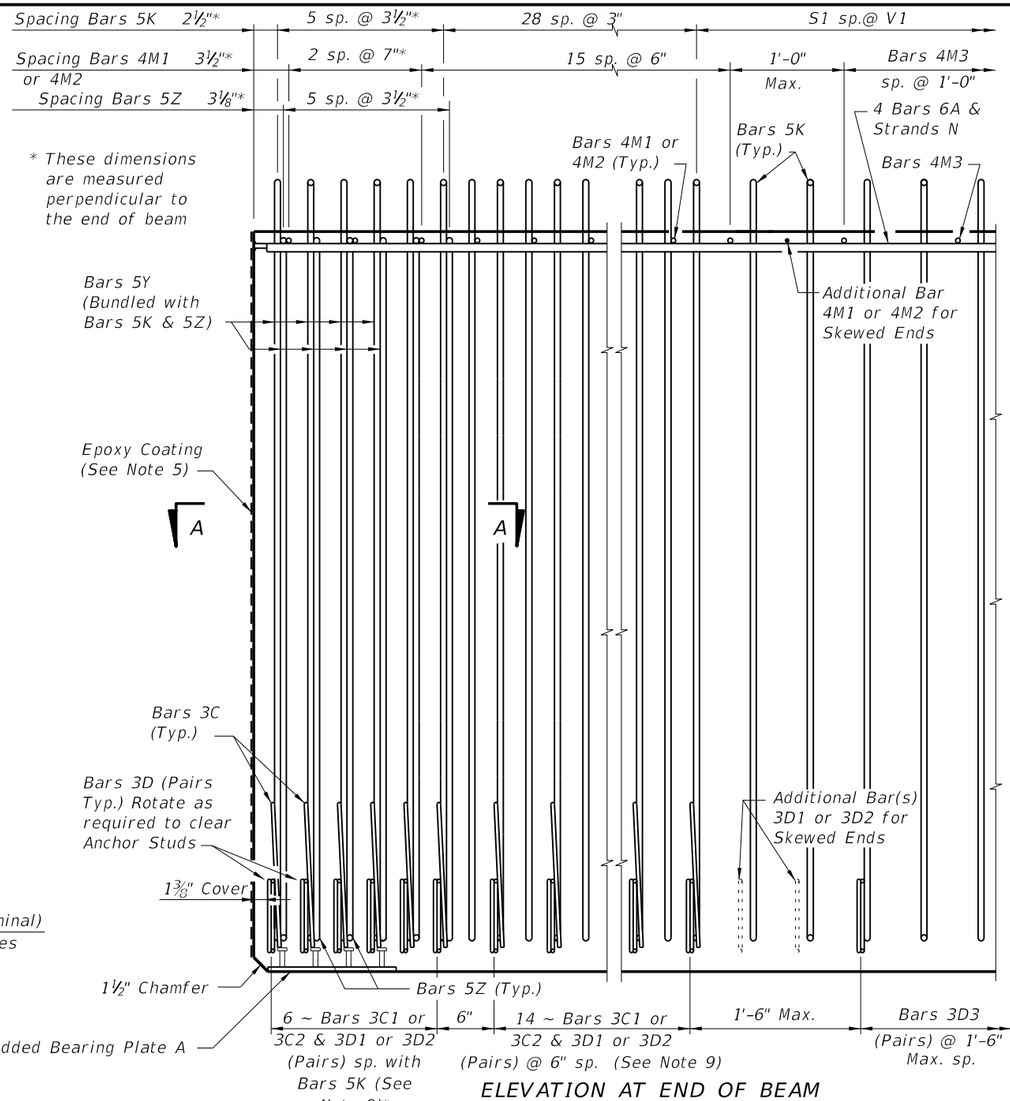

ELEVATION AT END OF BEAM
(Flanges Not Shown For Clarity)
(End 1 Shown, End 2 Similar)

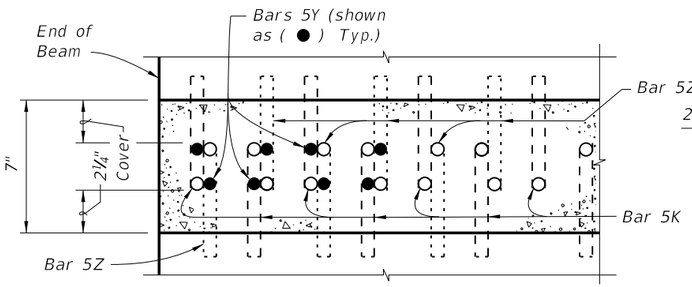

SECTION A-A FOR CONVENTIONAL REINFORCING
(Showing Bars 5K, 5Y & 5Z Only)

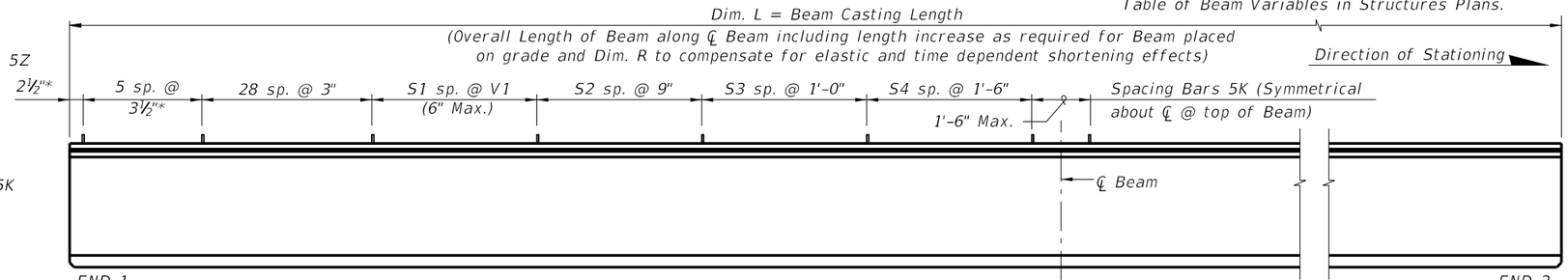

ELEVATION

CONVENTIONAL REINFORCING BAR BENDING DETAILS

BILL OF REINFORCING STEEL

MARK	NOTE NUMBERS	SIZE	NUMBER REQUIRED	LENGTH (NOTE 1)
A	—	6	8	28'-0"
C1	9, 10 & 11	3	20 (End 1)	Varies
C2	9, 10 & 11	3	20 (End 2)	Varies
D1	9, 10, 11 & 14	3	40 (End 1)	Varies
D2	9, 10, 11 & 14	3	40 (End 2)	Varies
D3	9 & 14	3	See Table	4'-3"
K	2, 9, 11 & 13	5	See Table	7'-8"
M1	9 & 10	4	18 (End 1)	Varies
M2	9 & 10	4	18 (End 2)	Varies
M3	9	4	See Table	3'-8"
N	3 & 4	⅜" Ø Strand	4	Dim. L
Y	9 & 11	5	16	6'-0"
Z	2, 9, 11 & 13	5	12	7'-2"

BENDING DIAGRAMS (See Note 1)

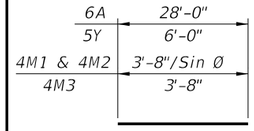

BARS 6A, 4M1, 4M2, 4M3 & 5Y

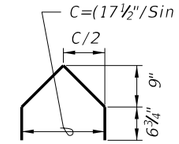

BARS 3C1 & 3C2

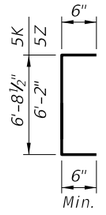

BARS 5K & 5Z

Ø=90° for Bars 3D3

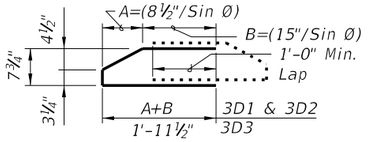

BARS 3D1, 3D2 & 3D3

NOTES:
A. Work this Index with Index No. 20010 – Typical Florida-I Beam Details and Notes and the Florida-I Beam – Table of Beam Variables in Structures Plans.
B. For referenced notes, see Index No. 20010.
C. For Dimensions A, B, C, D, L, R & V1 and number of spaces S1 thru S4, see Florida-I Beam – Table of Beam Variables in Structures Plans.

C:\d\projects\standards\structures\2013book\20078-1of2.dgn rd960rh 2:22:22 PM 6/28/2012

LAST REVISION	REVISION	DESCRIPTION:			INDEX NO.	SHEET NO.
07/01/12			FDOT DESIGN STANDARDS 2013	FLORIDA-I 78 BEAM - STANDARD DETAILS	20078	1

ALTERNATE REINFORCING STEEL (WELDED WIRE REINFORCEMENT) DETAILS

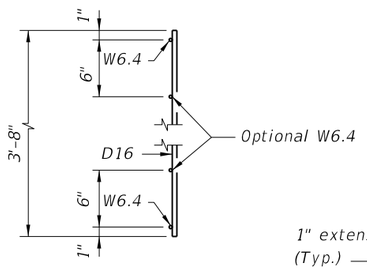

PIECES M
END VIEW

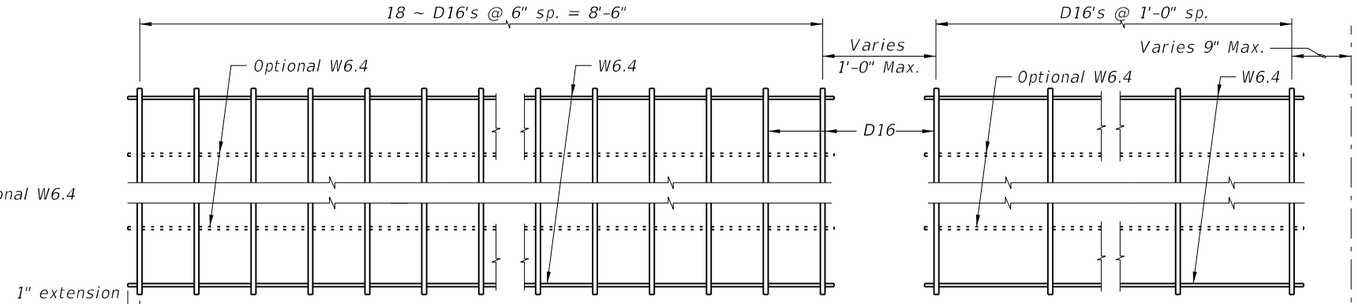

PLAN VIEW
PIECE M-1
(2 Required)

PLAN VIEW
PIECE M-3
(2 Required)

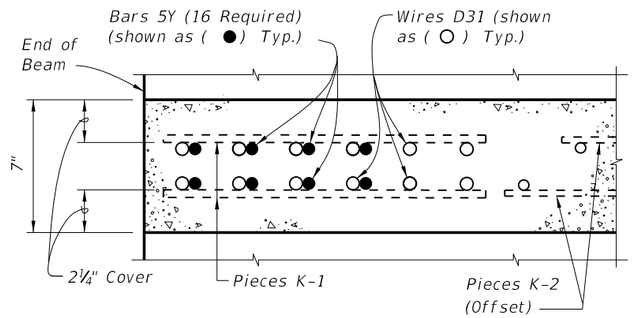

SECTION A-A
FOR WELDED WIRE REINFORCEMENT

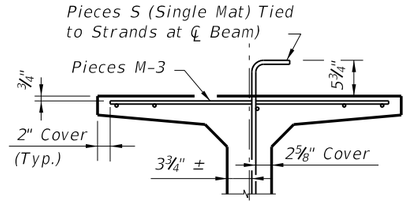

PARTIAL SECTION AT CENTER BEAM

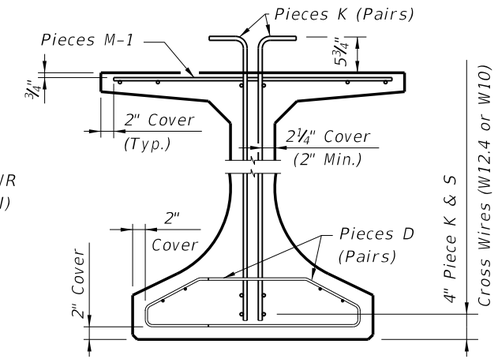

PARTIAL BEAM END VIEW
(Conventional Reinforcing Bars A, C, Y
and Strands N not Shown for Clarity)

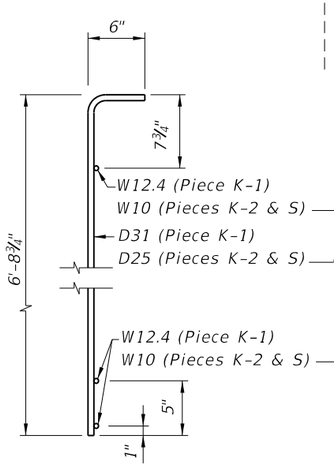

PIECES K & S
END VIEW

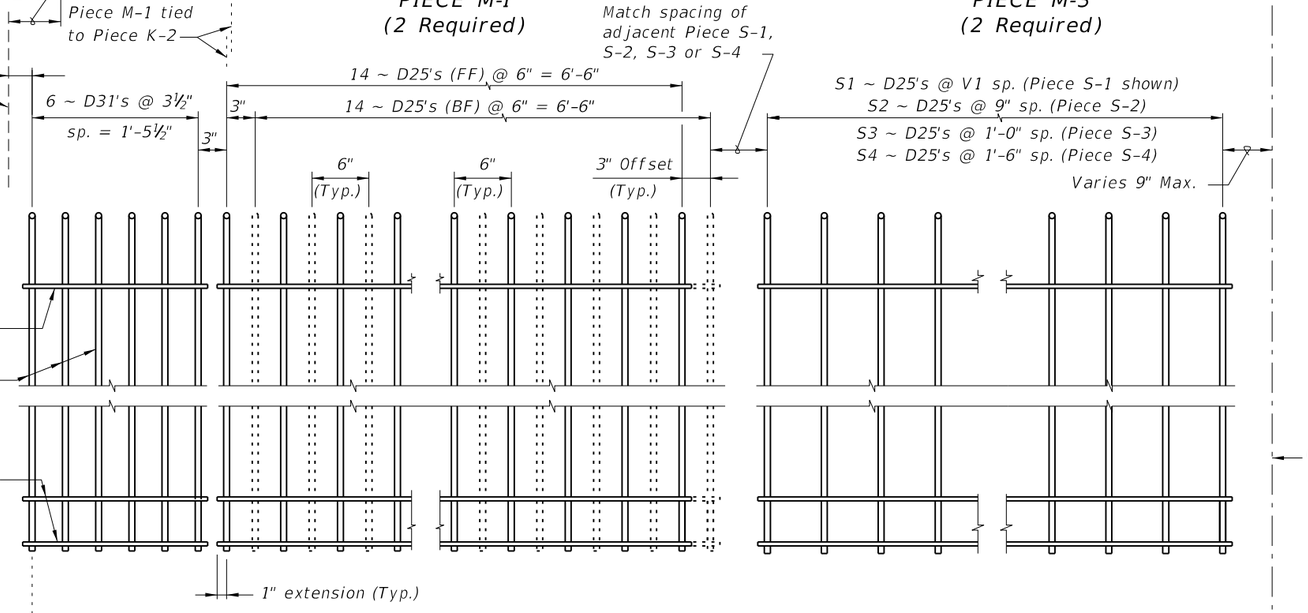

PIECE K-1
(Aligned EF)
(4 Required
~ 2 Pairs)

PIECE K-2
(FF Shown Solid, BF Shown Dashed)
(4 Required)

PIECE S-1, S-2, S-3 or S-4
(2 Required ~ Each Piece)

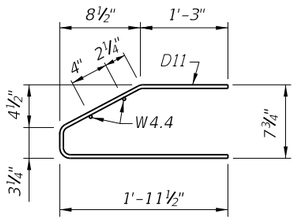

PIECES D
END VIEW

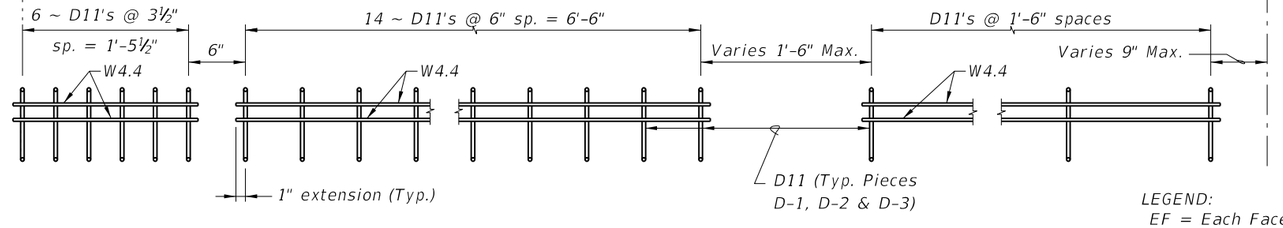

PIECE D-1
(4 Required ~ 2 Pairs)

PIECE D-2
(4 Required ~ 2 Pairs)

PIECE D-3
(4 Required ~ 2 Pairs)

LEGEND:
EF = Each Face
FF = Front Face
BF = Back Face

NOTES:

a. See Sheet 1 for placement details & Table of Beam Variables in Structures Plans for variables S1, S2, S3, S4 & V1.
b. Place Conventional Reinforcement Bars 6A & 3C as shown on Sheet 1. Place additional Bars 5Y as shown in Section A-A for Welded Wire Reinforcement. Bars 5Z will not be used with the WWR Option.
c. Pieces may be fabricated in multiple length sections.
d. For beams with skewed end conditions, Pieces D-1, D-2 & M-1 shall not be used; Conventional Reinforcement Bars D1, D2, C1, C2, M1 & M2 shall be used. See Index No. 20010 Skew Details and Note 9 for placement details. Shift Pieces K & Bars 5Y to accommodate skewed end conditions and align with Bars C and D.

LAST REVISION	REVISION	DESCRIPTION:				
07/01/10			FDOT DESIGN STANDARDS 2013	FLORIDA-I 78 BEAM - STANDARD DETAILS	INDEX NO. 20078	SHEET NO. 2

C:\d\projects\standards\structures\2013book\20078-2of2.dgn
rd960rh
2:22:24 PM
6/28/2012

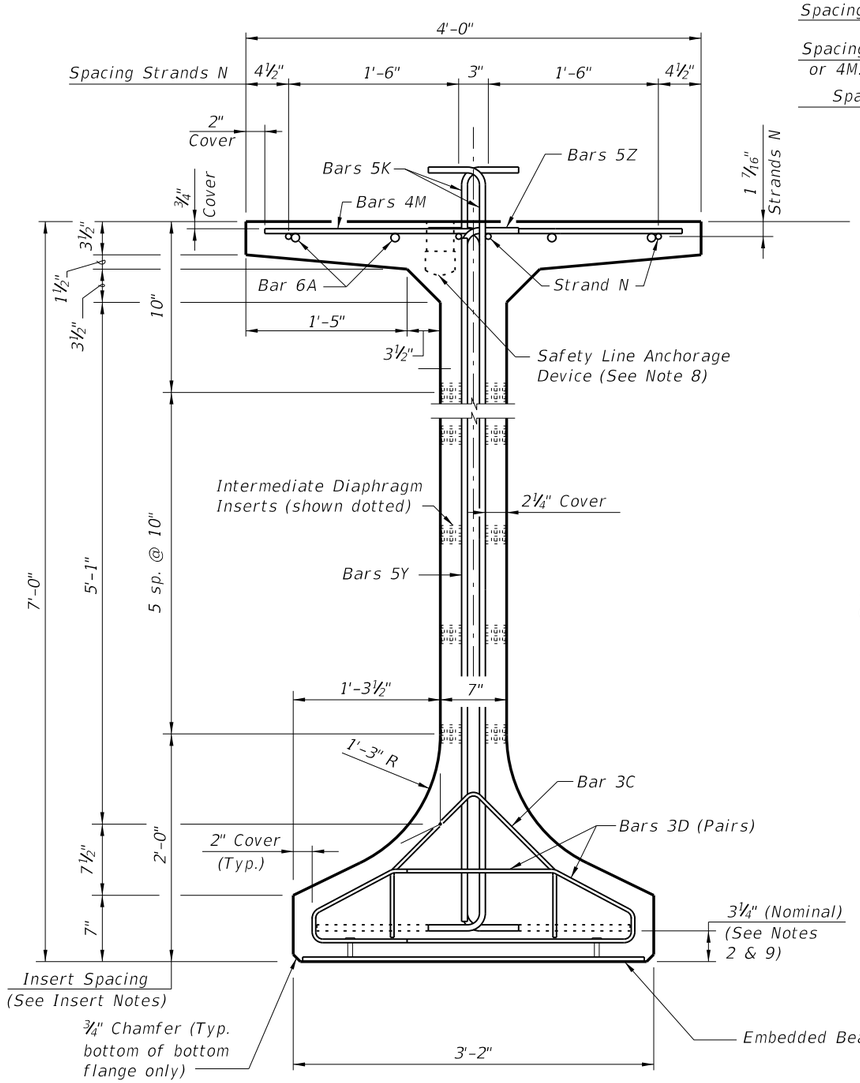

END VIEW

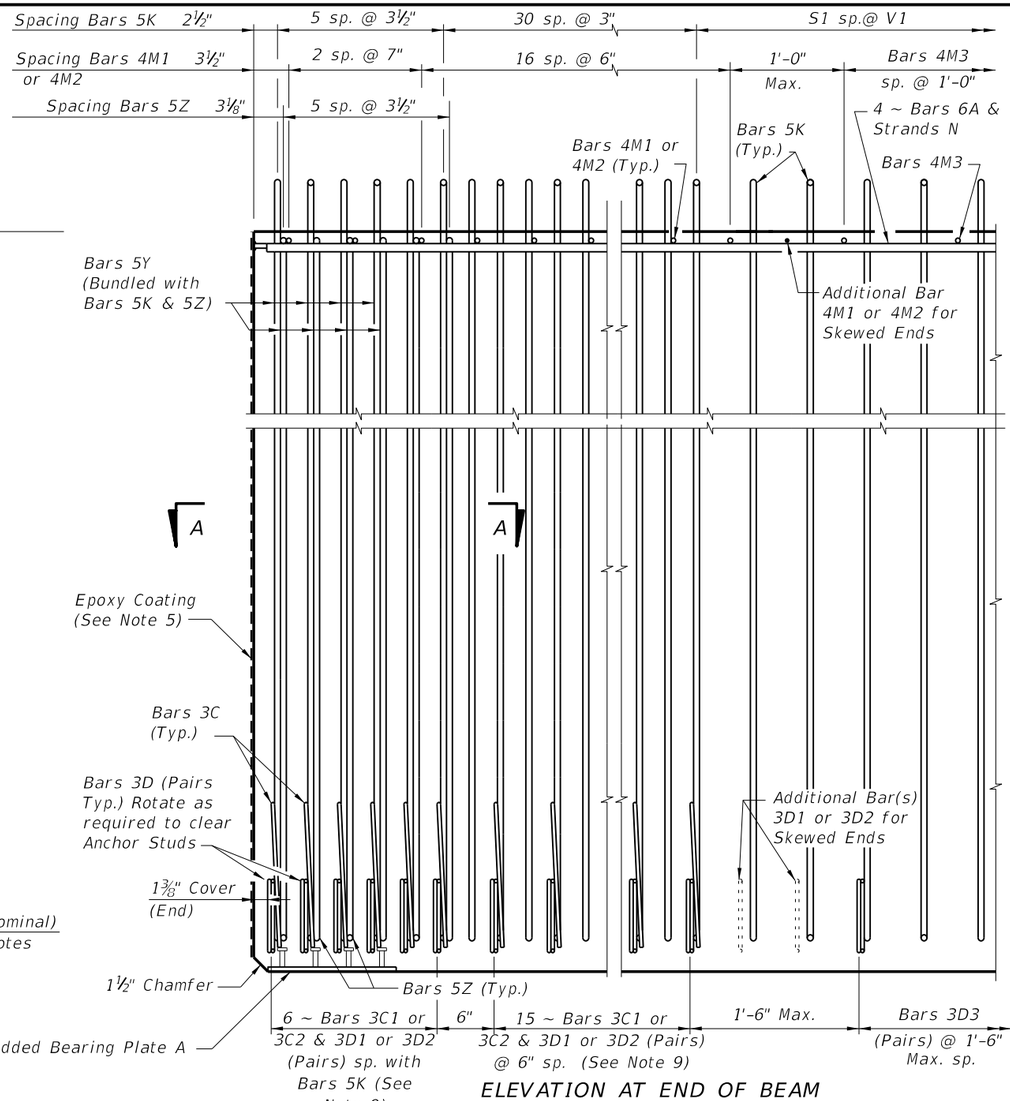

ELEVATION AT END OF BEAM
(Flanges Not Shown For Clarity)
(End 1 Shown, End 2 Similar)

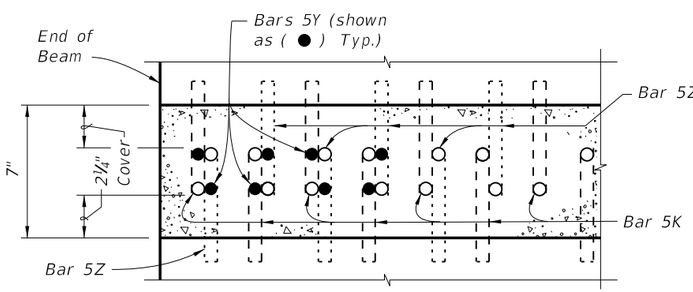

SECTION A-A FOR CONVENTIONAL REINFORCING
(Showing Bars 5K, 5Y & 5Z Only)

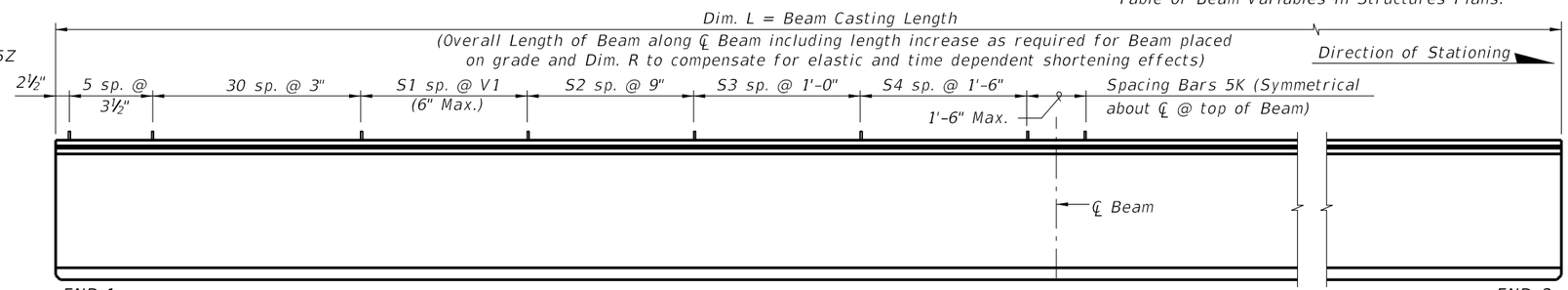

END 1 ELEVATION END 2

CONVENTIONAL REINFORCING BAR BENDING DETAILS

BILL OF REINFORCING STEEL

MARK	NOTE NUMBERS	SIZE	NUMBER REQUIRED	LENGTH (NOTE 1)
A	—	6	8	29'-0"
C1	9, 10 & 11	3	21 (End 1)	Varies
C2	9, 10 & 11	3	21 (End 2)	Varies
D1	9, 10, 11 & 14	3	42 (End 1)	Varies
D2	9, 10, 11 & 14	3	42 (End 2)	Varies
D3	9 & 14	3	See Table	4'-3"
K	2, 9, 11 & 13	5	See Table	8'-2"
M1	9 & 10	4	19 (End 1)	Varies
M2	9 & 10	4	19 (End 2)	Varies
M3	9	4	See Table	3'-8"
N	3 & 4	½" Ø Strand	4	Dim. L
Y	9 & 11	5	16	6'-6"
Z	2, 9, 11 & 13	5	12	7'-8"

BENDING DIAGRAMS (See Note 1)

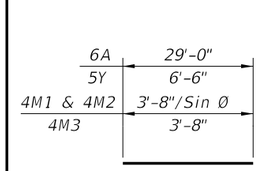

BARS 6A, 4M1, 4M2, 4M3 & 5Y

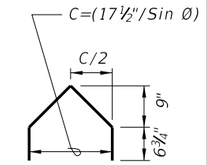

BARS 3C1 & 3C2

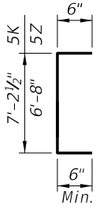

BARS 5K & 5Z

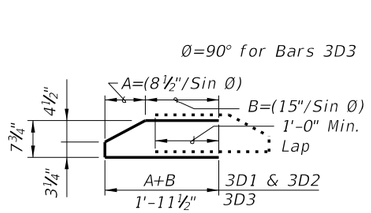

BARS 3D1, 3D2 & 3D3

NOTES:
A. Work this Index with Index No. 20010 – Typical Florida-I Beam Details and Notes and the Florida-I Beam – Table of Beam Variables in Structures Plans.
B. For referenced notes, see Index No. 20010.
C. For Dimensions A, B, C, D, L, R & V1 and number of spaces S1 thru S4, see Florida-I Beam – Table of Beam Variables in Structures Plans.

LAST REVISION	REVISION	DESCRIPTION:				
07/01/12			FDOT DESIGN STANDARDS 2013	FLORIDA-I 84 BEAM - STANDARD DETAILS	INDEX NO. 20084	SHEET NO. 1

C:\d\projects\standards\structures\2013book\20084-1of2.dgn
rd960rh
2:22:27 PM
6/28/2012

ALTERNATE REINFORCING STEEL (WELDED WIRE REINFORCEMENT) DETAILS

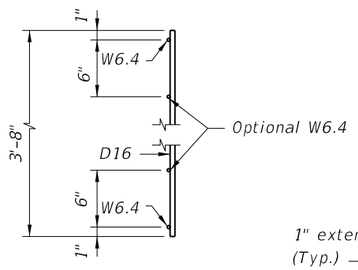

PIECES M
END VIEW

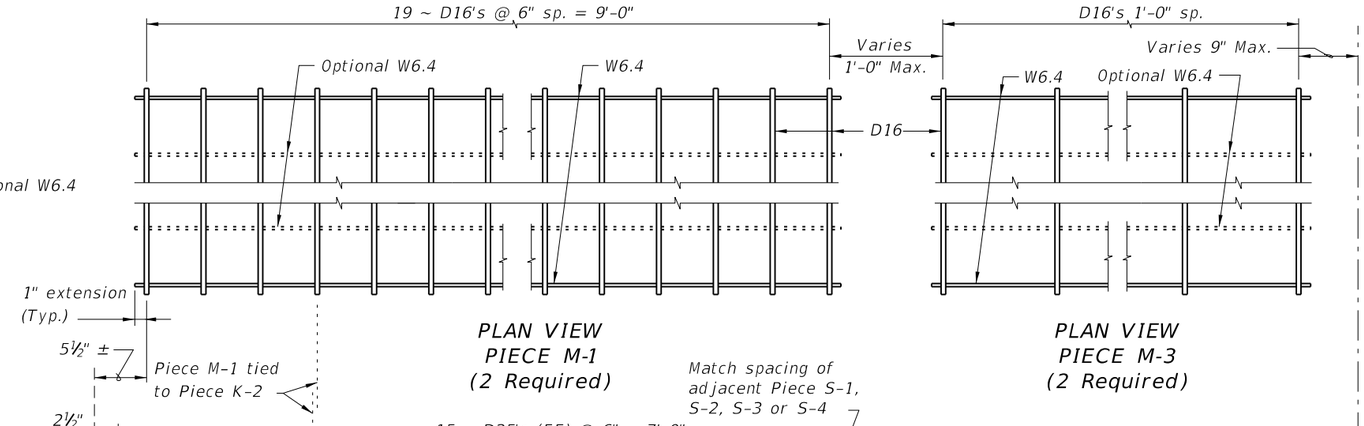

PLAN VIEW
PIECE M-1
(2 Required)

PLAN VIEW
PIECE M-3
(2 Required)

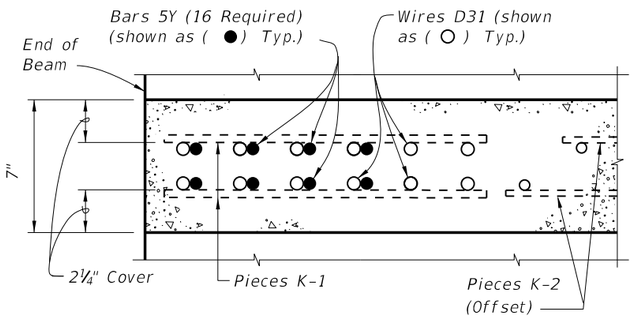

SECTION A-A
FOR WELDED WIRE REINFORCEMENT

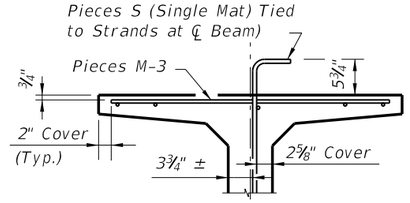

PARTIAL SECTION AT CENTER BEAM

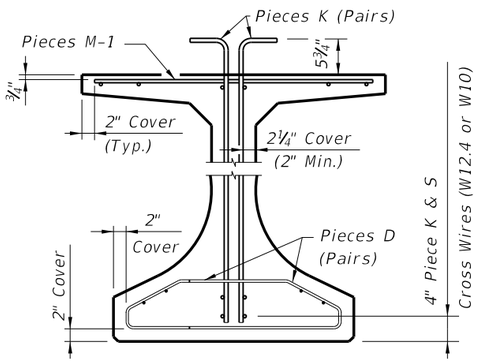

PARTIAL BEAM END VIEW
(Conventional Reinforcing Bars A, C, Y
and Strands N not Shown for Clarity)

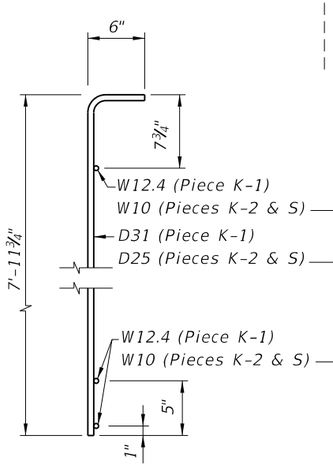

PIECES K & S
END VIEW

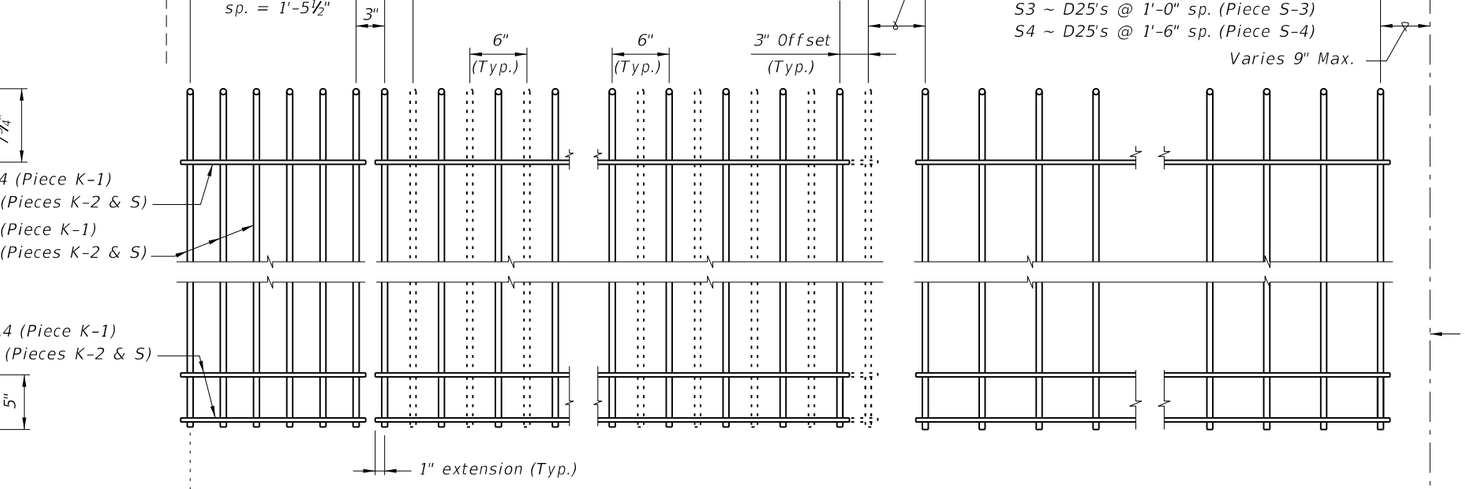

PIECE K-1
(Aligned EF)
(4 Required ~
2 Pairs)

PIECE K-2
(FF Shown Solid, BF Shown Dashed)
(4 Required)

PIECE S-1, S-2, S-3 or S-4
(2 Required ~ Each Piece)

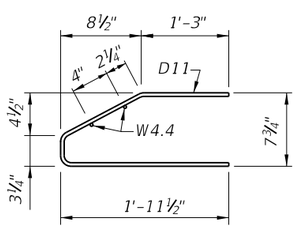

PIECES D
END VIEW

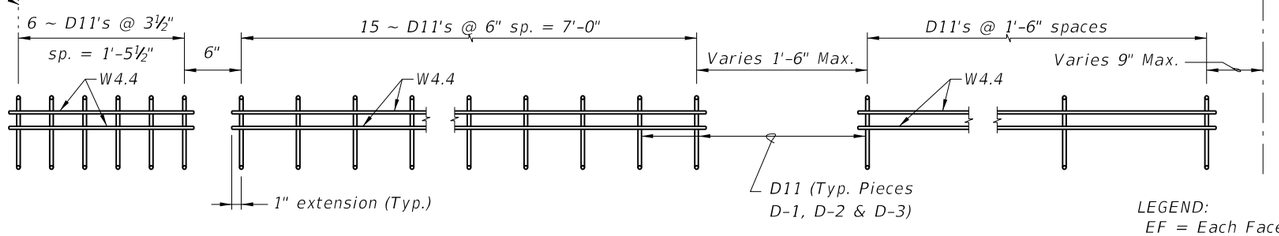

PIECE D-1
(4 Required ~ 2 Pairs)

PIECE D-2
(4 Required ~ 2 Pairs)

PIECE D-3
(4 Required ~ 2 Pairs)

LEGEND:
EF = Each Face
FF = Front Face
BF = Back Face

NOTES:

a. See Sheet 1 for placement details & Table of Beam Variables in Structures Plans for variables S1, S2, S3, S4 & V1.
b. Place Conventional Reinforcement Bars 6A & 3C as shown on Sheet 1. Place additional Bars 5Y as shown in Section A-A for Welded Wire Reinforcement. Bars 5Z will not be used with the WWR Option.
c. Pieces may be fabricated in multiple length sections.
d. For beams with skewed end conditions, Pieces D-1, D-2 & M-1 shall not be used; Conventional Reinforcement Bars D1, D2, C1, C2, M1 & M2 shall be used. See Index No. 20010 Skew Details and Note 9 for placement details. Shift Pieces K & Bars 5Y to accommodate skewed end conditions and align with Bars C and D.

C:\d\projects\standards\structures\2013book\20084-2of2.dgn rd960rh 2:22:29 PM 6/28/2012

LAST REVISION	REVISION	DESCRIPTION:			INDEX NO.	SHEET NO.
07/01/10			FDOT DESIGN STANDARDS 2013	FLORIDA-I 84 BEAM - STANDARD DETAILS	20084	2

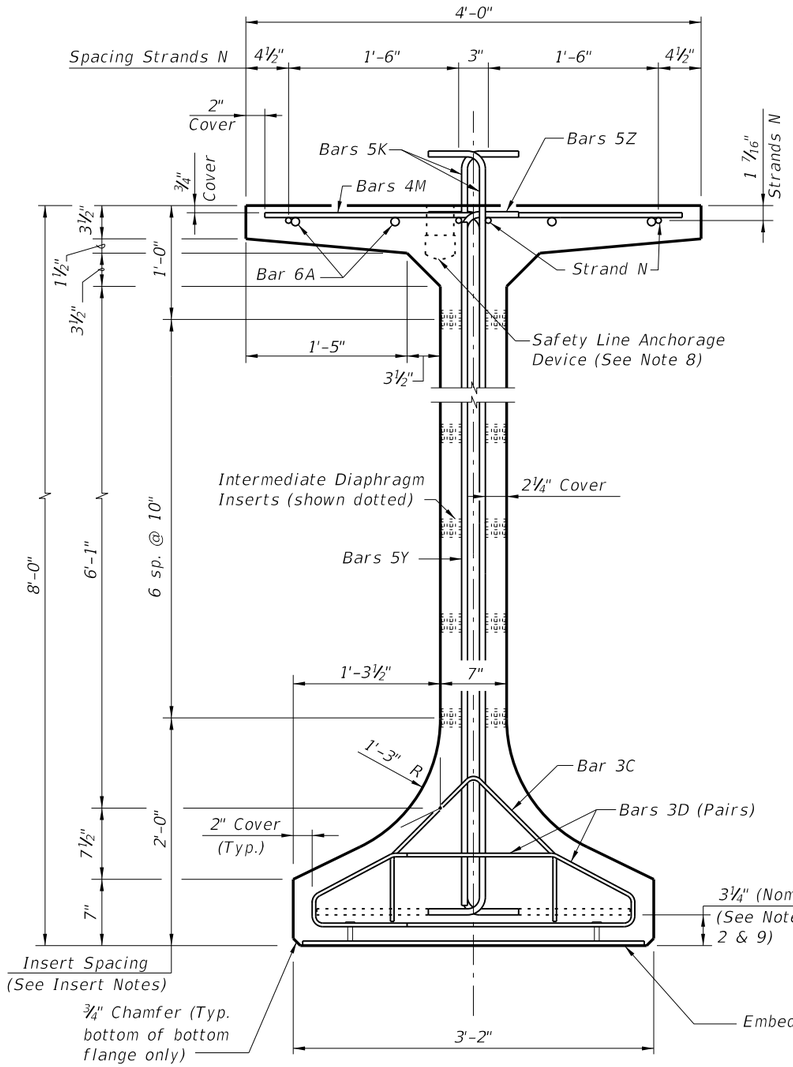

END VIEW

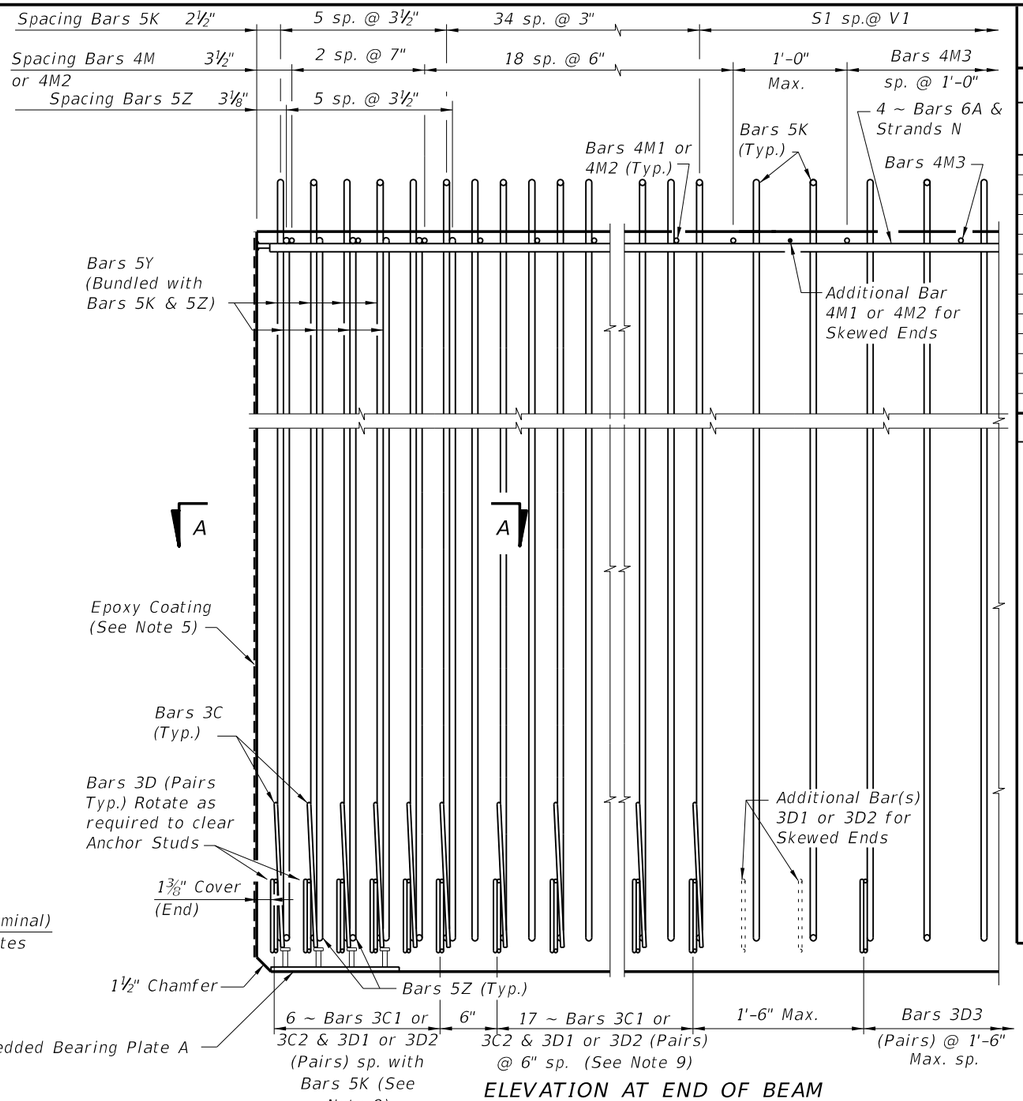

ELEVATION AT END OF BEAM
(Flanges Not Shown For Clarity)
(End 1 Shown, End 2 Similar)

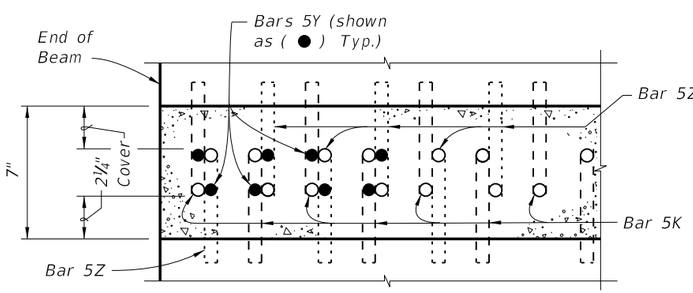

SECTION A-A FOR CONVENTIONAL REINFORCING
(Showing Bars 5K, 5Y & 5Z Only)

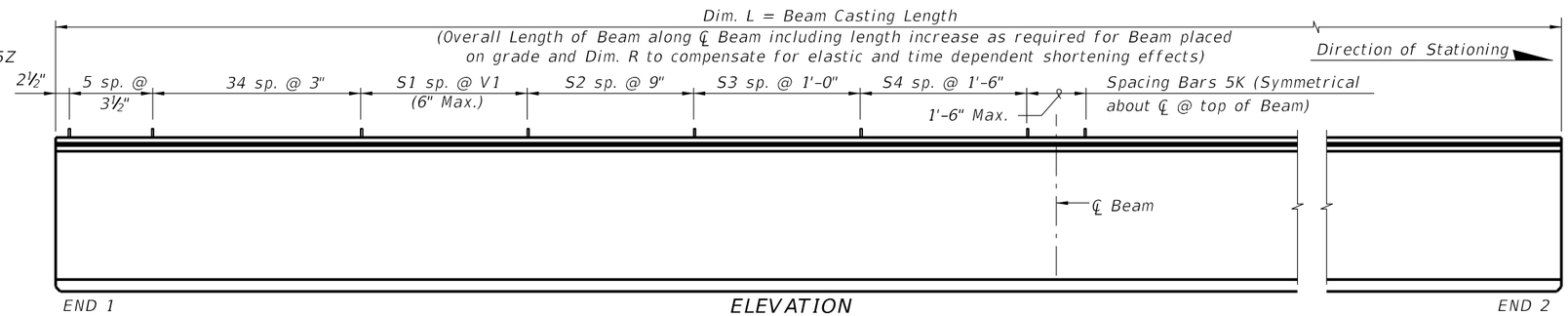

ELEVATION

CONVENTIONAL REINFORCING BAR BENDING DETAILS

BILL OF REINFORCING STEEL

MARK	NOTE NUMBERS	SIZE	NUMBER REQUIRED	LENGTH (NOTE 1)
A	—	6	8	30'-0"
C1	9, 10 & 11	3	23 (End 1)	Varies
C2	9, 10 & 11	3	23 (End 2)	Varies
D1	9, 10, 11 & 14	3	46 (End 1)	Varies
D2	9, 10, 11 & 14	3	46 (End 2)	Varies
D3	9 & 14	3	See Table	4'-3"
K	2, 9, 11 & 13	5	See Table	9'-2"
M1	9 & 10	4	21 (End 1)	Varies
M2	9 & 10	4	21 (End 2)	Varies
M3	9	4	See Table	3'-8"
N	3 & 4	½" Ø Strand	4	Dim. L
Y	9 & 11	5	16	7'-6"
Z	2, 9, 11 & 13	5	12	8'-8"

BENDING DIAGRAMS (See Note 1)

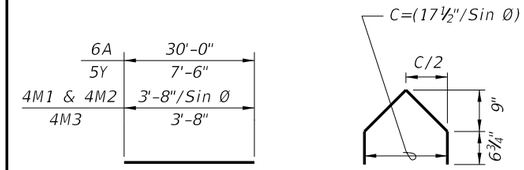

BARS 6A, 4M1, 4M2, 4M3 & 5Y

BARS 3C1 & 3C2

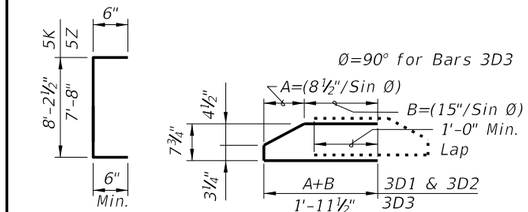

BARS 5K & 5Z

BARS 3D1, 3D2 & 3D3

NOTES:
A. Work this Index with Index No. 20010 – Typical Florida-I Beam Details and Notes and the Florida-I Beam – Table of Beam Variables in Structures Plans.
B. For referenced notes, see Index No. 20010.
C. For Dimensions A, B, C, D, L, R & V1 and number of spaces S1 thru S4, see Florida-I Beam – Table of Beam Variables in Structures Plans.

C:\d\projects\standards\structures\2013book\20096-1of2.dgn rd960rh 2:22:31 PM 6/28/2012

LAST REVISION	REVISION	DESCRIPTION:				
07/01/12			FDOT DESIGN STANDARDS 2013	FLORIDA-I 96 BEAM - STANDARD DETAILS	INDEX NO. 20096	SHEET NO. 1

ALTERNATE REINFORCING STEEL (WELDED WIRE REINFORCEMENT) DETAILS

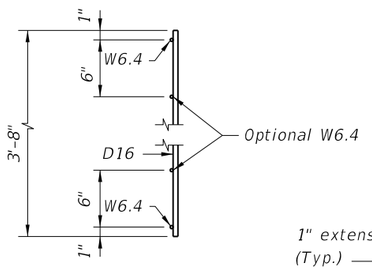

PIECES M
END VIEW

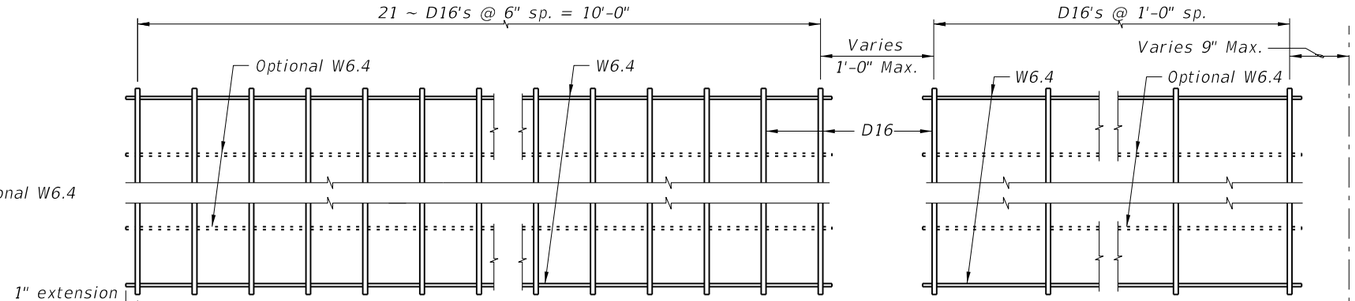

PLAN VIEW
PIECE M-1
(2 Required)

PLAN VIEW
PIECE M-3
(2 Required)

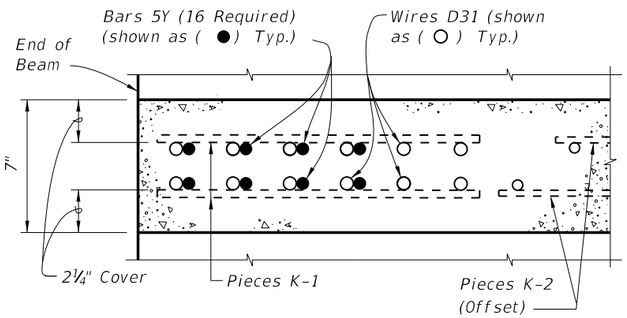

SECTION A-A
FOR WELDED WIRE REINFORCEMENT

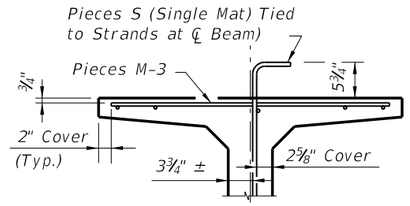

PARTIAL SECTION AT CENTER BEAM

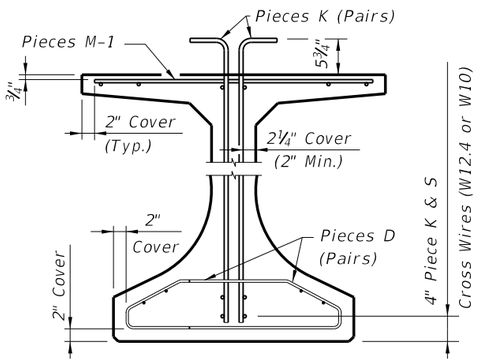

PARTIAL BEAM END VIEW
(Conventional Reinforcing Bars A, C, Y
and Strands N not Shown for Clarity)

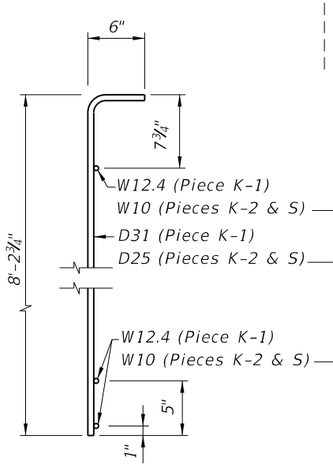

PIECES K & S
END VIEW

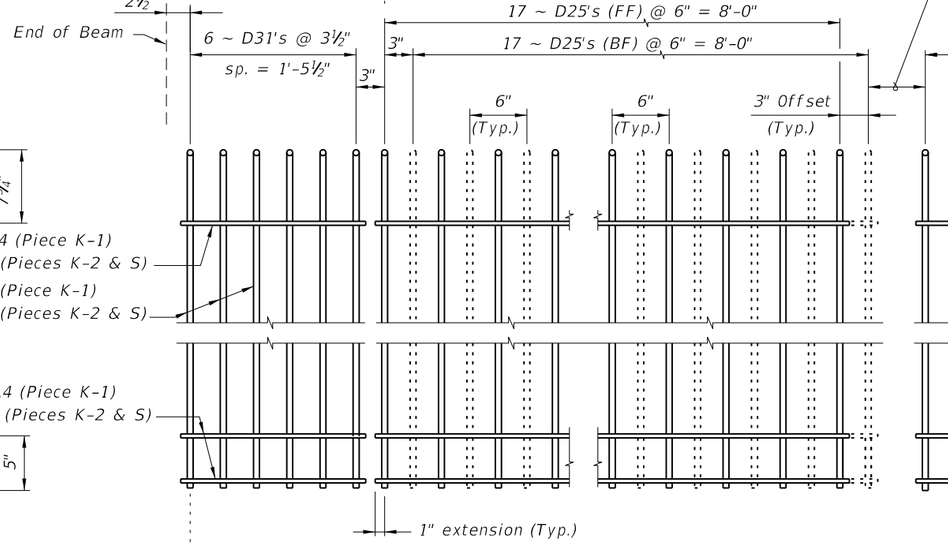

PIECE K-1
(Aligned EF)
(4 Required ~
2 Pairs)

PIECE K-2
(FF Shown Solid, BF Shown Dashed)
(4 Required)

PIECE S-1, S-2, S-3 or S-4
(2 Required ~ Each Piece)

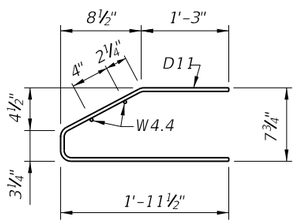

PIECES D
END VIEW

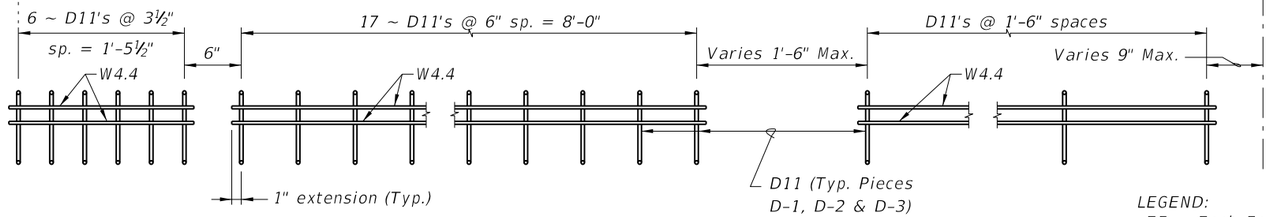

PIECE D-1
(4 Required ~ 2 Pairs)

PIECE D-2
(4 Required ~ 2 Pairs)

PIECE D-3
(4 Required ~ 2 Pairs)

LEGEND:
EF = Each Face
FF = Front Face
BF = Back Face

NOTES:

a. See Sheet 1 for placement details & Table of Beam Variables in Structures Plans for variables S1, S2, S3, S4 & V1.
b. Place Conventional Reinforcement Bars 6A & 3C as shown on Sheet 1. Place additional Bars 5Y as shown in Section A-A for Welded Wire Reinforcement. Bars 5Z will not be used with the WWR Option.
c. Pieces may be fabricated in multiple length sections.
d. For beams with skewed end conditions, Pieces D-1, D-2 & M-1 shall not be used; Conventional Reinforcement Bars D1, D2, C1, C2, M1 & M2 shall be used. See Index No. 20010 Skew Details and Note 9 for placement details. Shift Pieces K & Bars 5Y to accommodate skewed end conditions and align with Bars C and D.

C:\d\projects\standards\structures\2013book\20096-2of2.dgn rd960rh 2:22:33 PM 6/28/2012

LAST REVISION	REVISION	DESCRIPTION:				
07/01/10			FDOT DESIGN STANDARDS 2013	FLORIDA-I 96 BEAM - STANDARD DETAILS	INDEX NO. 20096	SHEET NO. 2

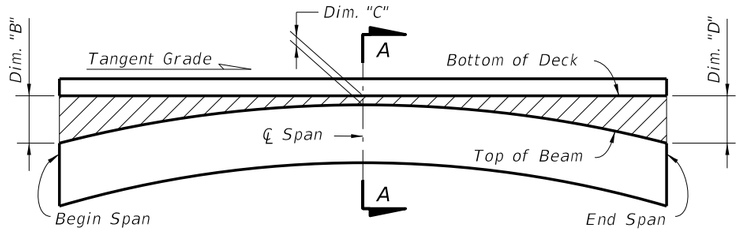

BUILD-UP DIAGRAM FOR TANGENT SPANS
(ALONG ℄ BEAM) (CASE 1)

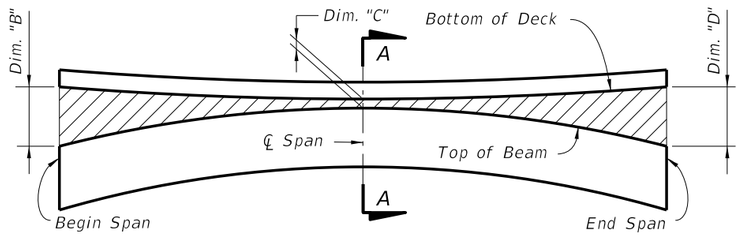

BUILD-UP DIAGRAM FOR SAG VERTICAL CURVE SPANS
(ALONG ℄ BEAM) (CASE 2)

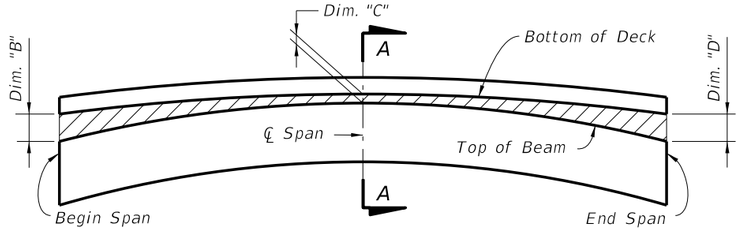

BUILD-UP DIAGRAM FOR CREST VERTICAL CURVE SPANS
- CONTROL AT ℄ SPAN
(ALONG ℄ BEAM) (CASE 3)

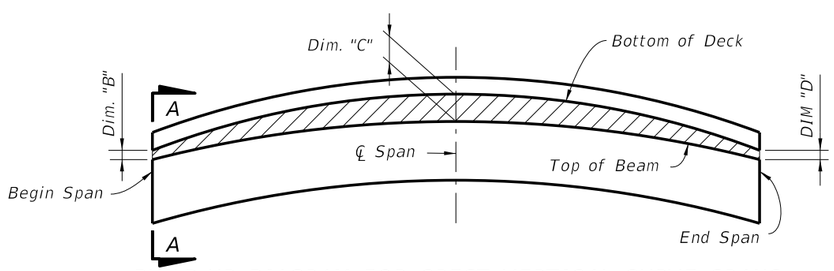

BUILD-UP DIAGRAM FOR CREST VERTICAL CURVE SPANS
- CONTROL AT BEGIN OR END SPAN
(ALONG ℄ BEAM) (CASE 4)

BEAM CAMBER AND BUILD-UP NOTES:

The build-up values given in the Data Table* are based on theoretical beam cambers. The Contractor shall monitor beam cambers for the purpose of predicting camber values at the time of the deck pour. If the predicted cambers based on field measurements differ more than +/- ½" from the theoretical "Net Beam Camber @ 120 Days" shown in the Data Table*, obtain approval from the Engineer to modify the build-up dimensions as required. When the measured beam cambers create a conflict with the bottom mat of deck steel, notify the Engineer a minimum of 21 days prior to casting.

Dim. "A" includes the weight of the Stay-In-Place Formwork.

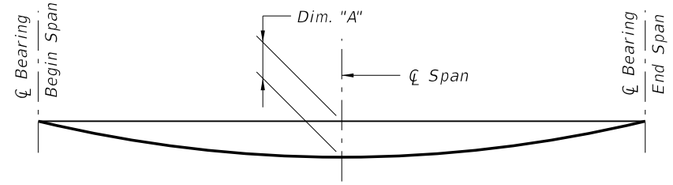

DEAD LOAD DEFLECTION DIAGRAM

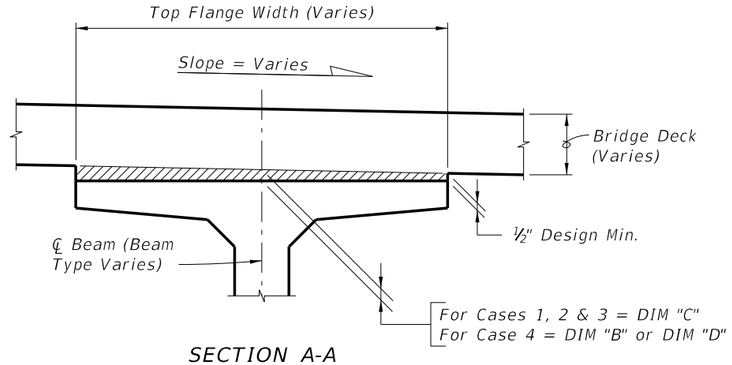

SECTION A-A
BUILD-UP OVER BEAMS

* NOTE:
Work this Index with the Build-up and Deflection Data Table for Florida-I Beams in Structures Plans.

C:\d\projects\standards\structures\2013book\20199-1of1.dgn
rd960rh
2:22:38 PM
6/28/2012

LAST REVISION	REVISION	DESCRIPTION:			INDEX NO.	SHEET NO.
01/01/12			FDOT DESIGN STANDARDS 2013	BUILD-UP & DEFLECTION DATA FOR FLORIDA-I BEAMS	20199	1

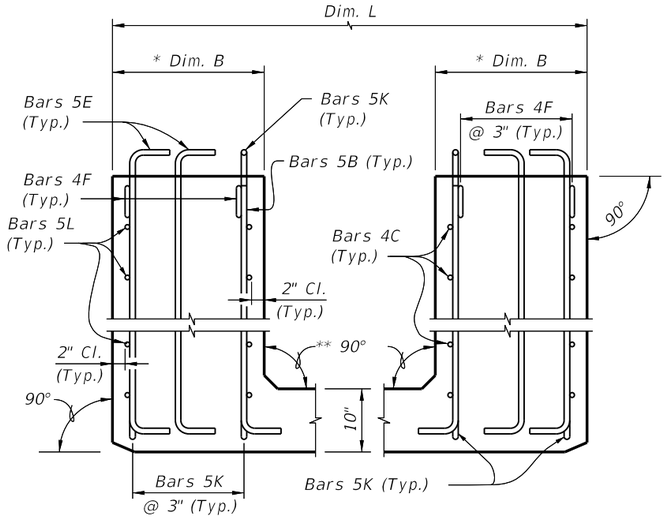

* Dim. B is 1'-6" for Florida U 48 and 54 Beams and 2'-0" for Florida U 63 and 72 Beams.

** Concrete face may be sloped with a maximum 1:24 draft to facilitate formwork removal.

CONDITION 1
(P = 0.0)

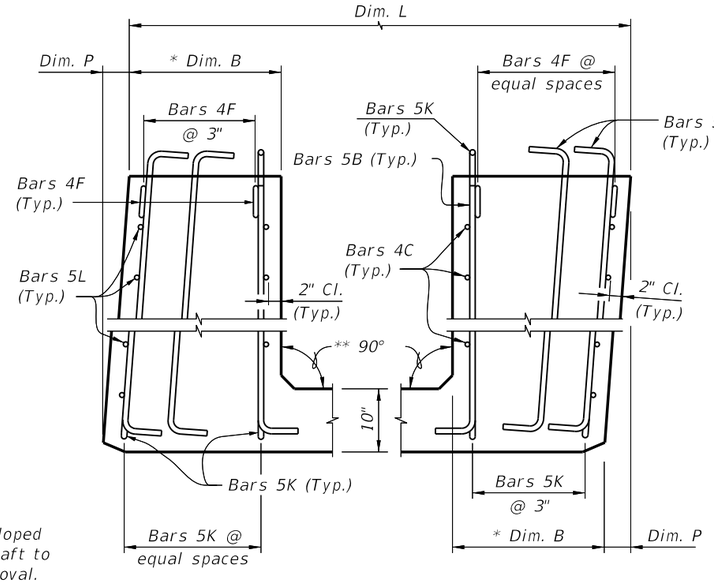

CONDITION 2

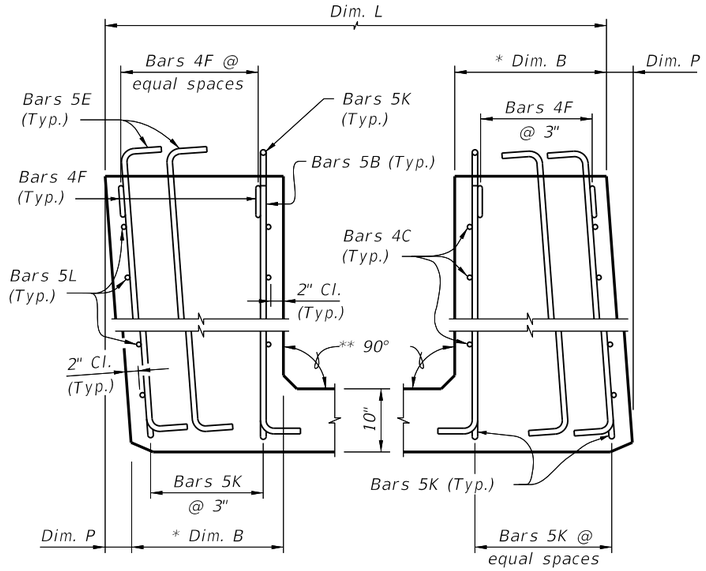

CONDITION 3

SCHEMATIC END ELEVATIONS OF BEAMS

(Showing Vertical Bevel of Beam End)

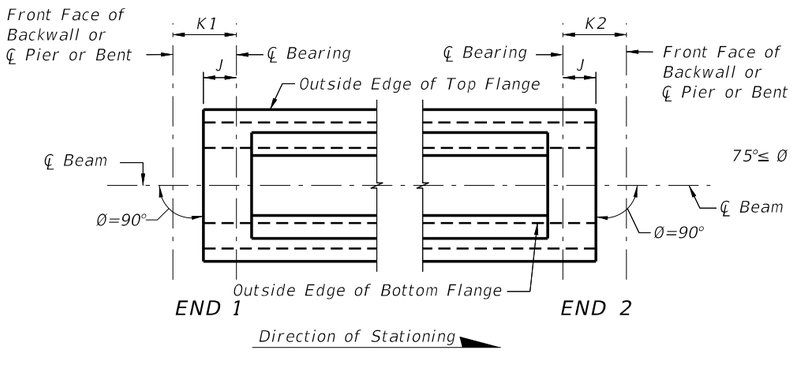

CASE 1

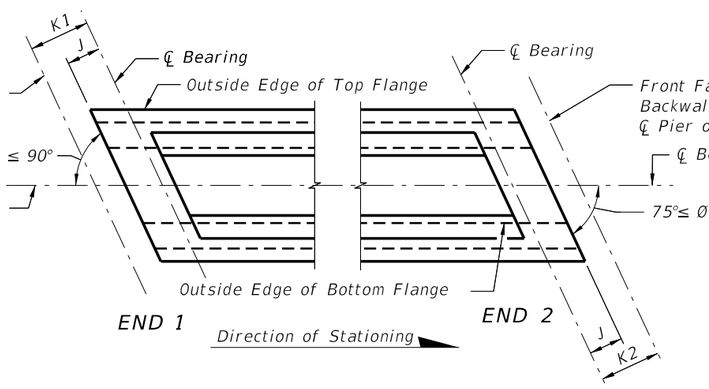

CASE 2

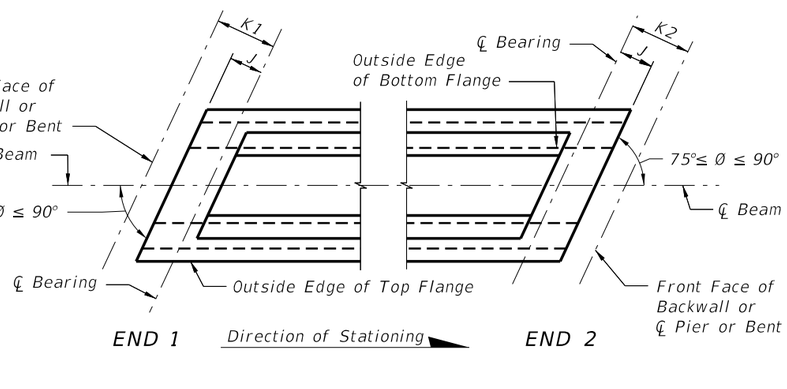

CASE 3

SCHEMATIC PLAN VIEWS AT BEAM ENDS

NOTE:
Work this Index with Florida U Beam - Table of Beam Variables in Structures Plans.

C:\d\projects\standards\structures\2013book\20210-1of2.dgn
rd960rh
2:22:40 PM
6/28/2012

LAST REVISION	REVISION	DESCRIPTION:		FDOT DESIGN STANDARDS 2013	TYPICAL FLORIDA U BEAM DETAILS AND NOTES	INDEX NO.	SHEET NO.
01/01/12						20210	1

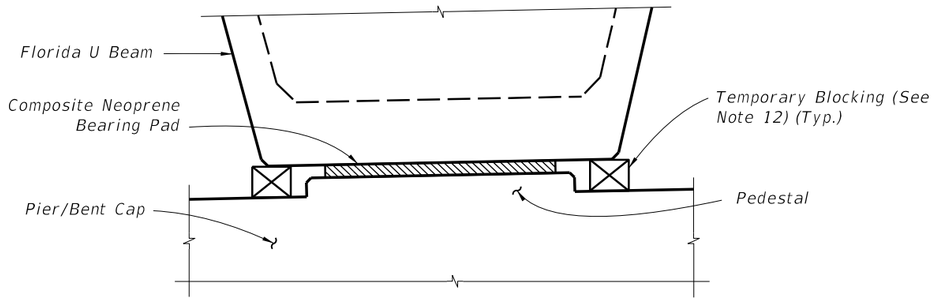

TEMPORARY BLOCKING OF BEAM ENDS

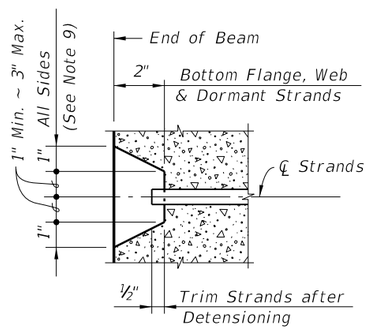

TYPICAL STRAND BLOCKOUT DETAIL

BEAM NOTES

1. All bar dimensions are out-to-out.
2. Strands N (Dormant Strands) shall be ASTM A416, Grade 270, seven-wire strands ⅜" Ø or larger, stressed to 10,000 lbs. each.
3. Unless otherwise noted in Structures Plans, the minimum concrete cover for reinforcing steel shall be 2".
4. At the option of the Contractor and with the Engineer's Approval, deformed welded wire reinforcement may be used in lieu of Bars 6A1, 4A2, 5B, 4C, 3D, 5E, 4F, 4G, 4H, 5K, 5L and 4M except as noted below in note 7, provided the wire sizes and spacing match those shown on the Standard Beam Detail sheets for these bars. Welded wire reinforcement shall conform to ASTM A497.
5. Safety Line Anchorage Devices or sleeves are required and permitted in the top flanges only to accomodate fall protection systems used during construction. See shop drawings for details and spacing of any required embedments.
6. For Beams with vertically beveled end conditions when "Dim. P" exceeds 1", Bars 5E and the first Bars 4F and 5K shall be placed parallel to the end of the beam. The remaining Bars 4F and 5K within the limits of "Dim. B" shall be fanned at equal spaces.
7. Welded deformed wire reinforcement shall not be used for the end reinforcement (Bars 5B, 4C, 3D, 5E, 4F, 5K, and 5L) for beams with skewed end conditions or vertically beveled end conditions when "Dim. P" exceeds 1".
8. Bars 5K shall be placed and tied to the fully bonded strands in the bottom row (see "STRAND PATTERN" in Structures Plans).
9. Strand Protection at beam ends shall consist of a 2" deep recess formed around all strands (including dormant) or strand groups. Extend recess to face of web and bottom of flange for bottom row of strands. After detensioning, cut strands ½" from recessed surface and fill the recess with a Type F-2 or Q Epoxy Compound in accordance with Section 926 of the Specifications.
10. Use Size No. 67 maximum sized aggregate.
11. Use Stay-in-Place metal deck forms inside the beams.
12. Prior to deck placement, based on the deck forming system and deck placement sequence, evaluate and provide, if necessary, temporary bracing between the U Beams. Also, prior to deck placement, provide temporary blocking under each web at both ends of every beam. Ensure the temporary blocking is adequate to resist movements and rotations that occur during placement of the deck. Leave temporary blocking and bracing in place for a minimum of four days after the deck placement.
13. For referenced Dimensions, Angles and Case Numbers see Table of Beam Variables in Structures Plans.

NOTE:
Work this Index with Florida U Beam – Table of Beam Variables in Structures Plans.

C:\d\projects\standards\structures\2013book\20210-2of2.dgn
rd960rh
2:22:42 PM
6/28/2012

LAST REVISION	REVISION	DESCRIPTION:				
07/01/12			FDOT DESIGN STANDARDS 2013	TYPICAL FLORIDA U BEAM DETAILS AND NOTES	INDEX NO. 20210	SHEET NO. 2

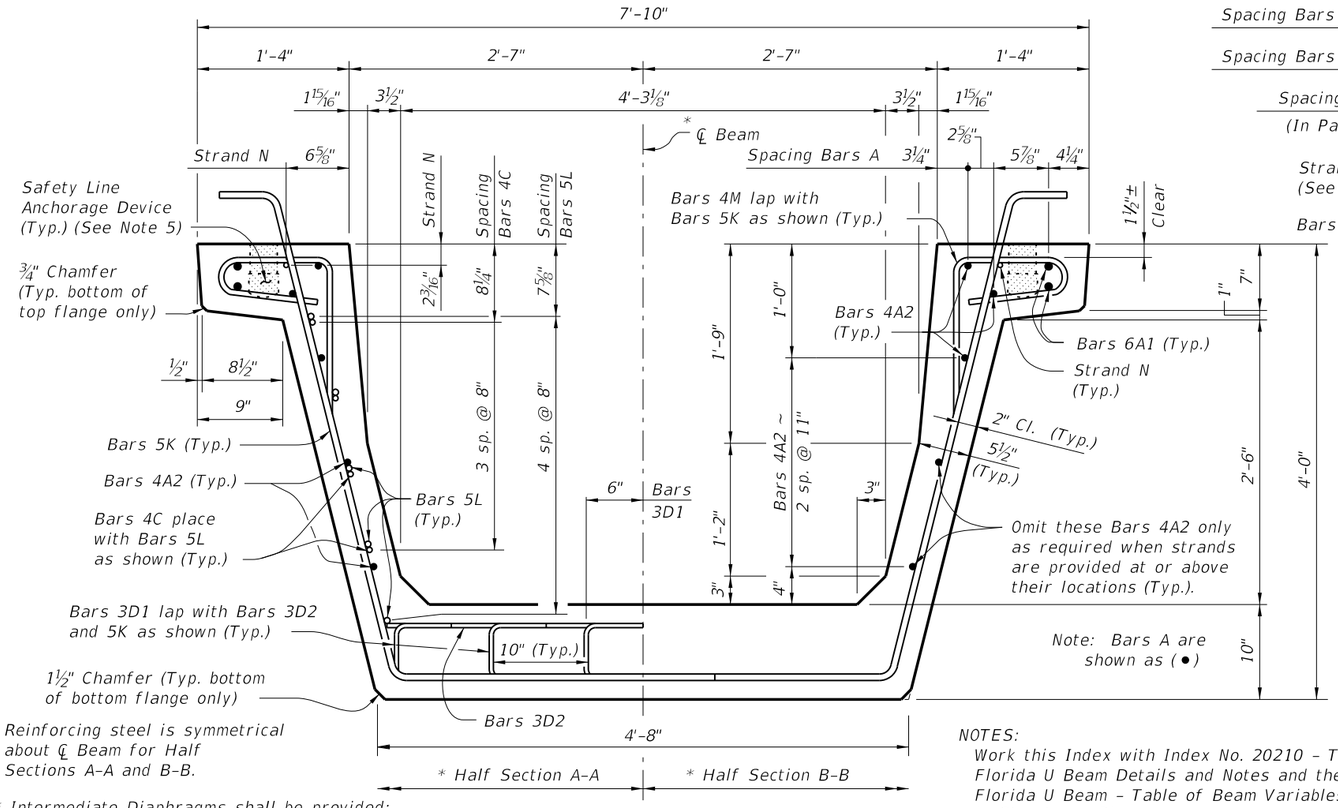

* Reinforcing steel is symmetrical about ℄ Beam for Half Sections A–A and B–B.

** Intermediate Diaphragms shall be provided:
(1) – At midspan.
(2) – At 20'-0" Max. from midspan when beam length (L) exceeds 60 Ft.

TYPICAL SECTION

NOTES:
Work this Index with Index No. 20210 – Typical Florida U Beam Details and Notes and the Florida U Beam – Table of Beam Variables in Structures Plans.

For referenced notes see Index No. 20210.

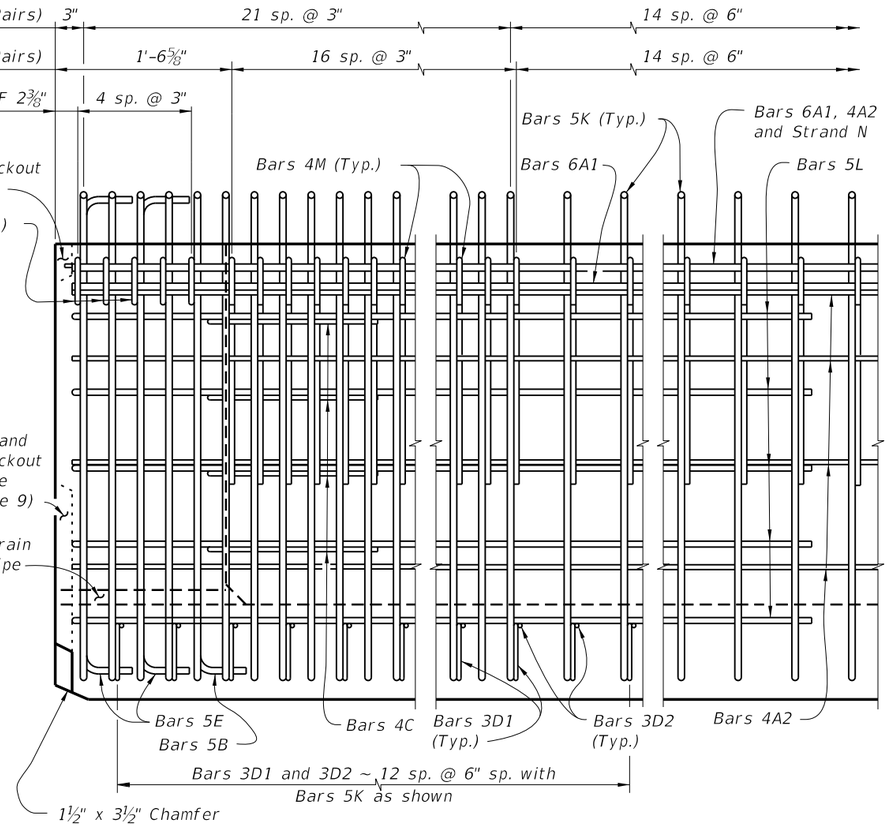

ELEVATION AT END OF BEAM

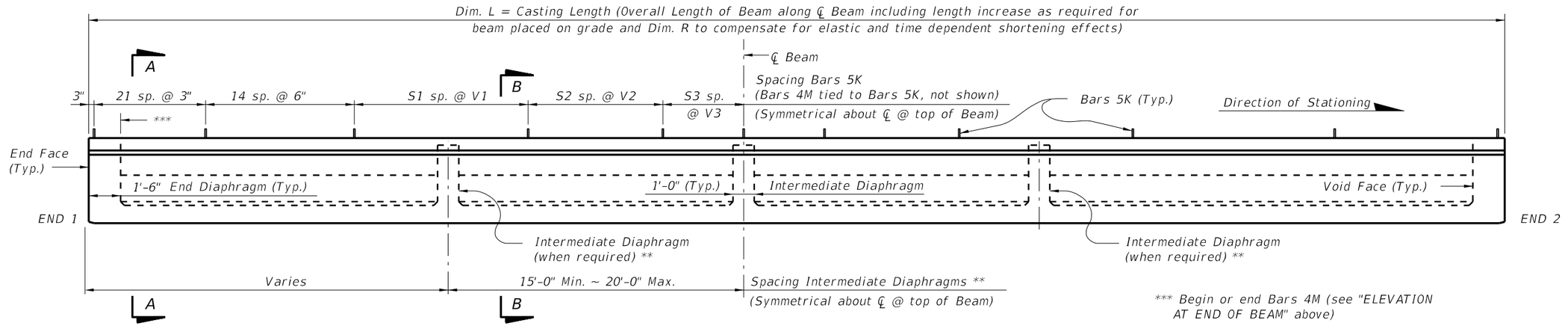

*** Begin or end Bars 4M (see "ELEVATION AT END OF BEAM" above)

ELEVATION

6/28/2012 2:22:45 PM rd960rh C:\d\projects\standards\structures\2013book\20248-1of3.dgn

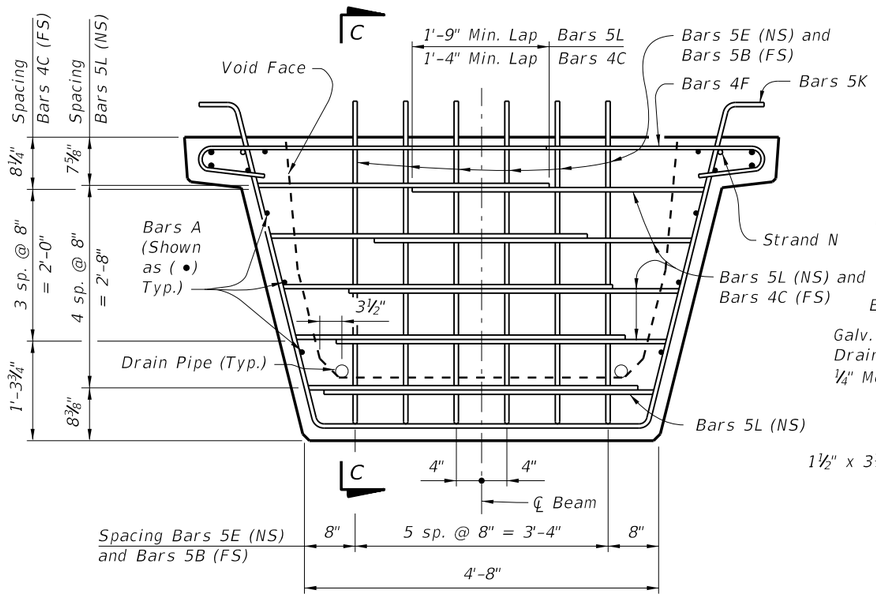

END VIEW AT END DIAPHRAGM

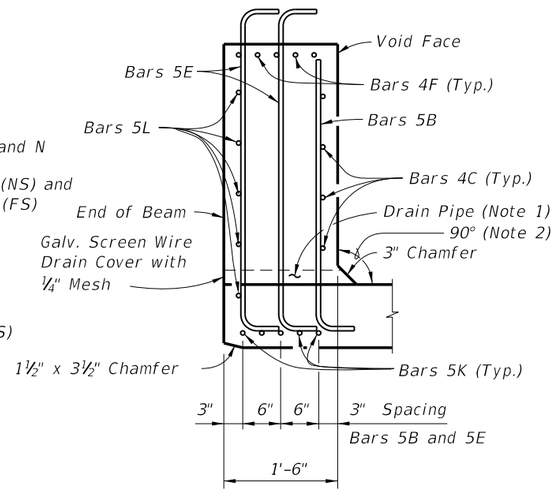

SECTION C-C

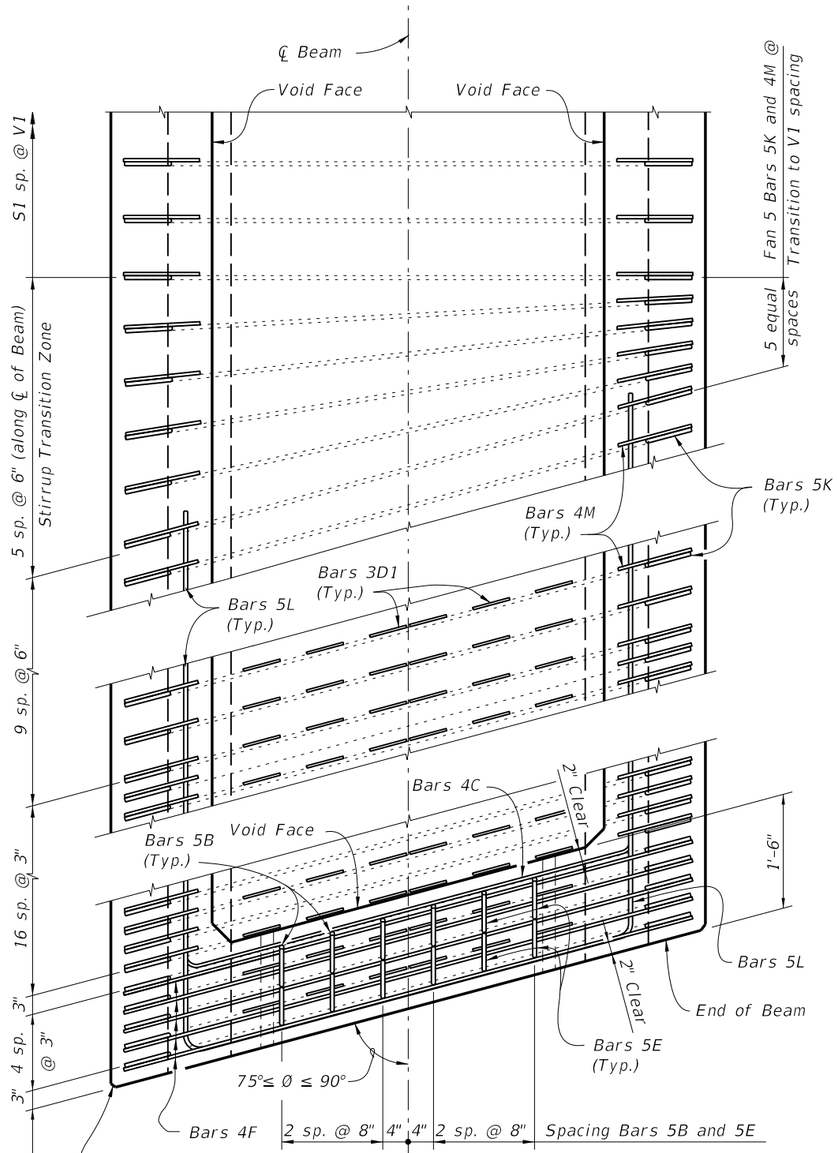

NOTES:
1. Drains shall be placed adjacent to each web at each beam end (four drains per beam). Drain Pipe shall be 2" Nominal Pipe Size, Schedule 80 PVC. Provide removable pipe plugs to prevent concrete entrance during beam casting. Plugs to be removed from the inside after casting. Galvanized screen wire shall cover the end of the pipe and bent down around the sides of the pipe, a minimum of 1" and secured prior to casting.
2. Concrete face may be sloped with a maximum 1:24 draft to facilitate formwork removal.

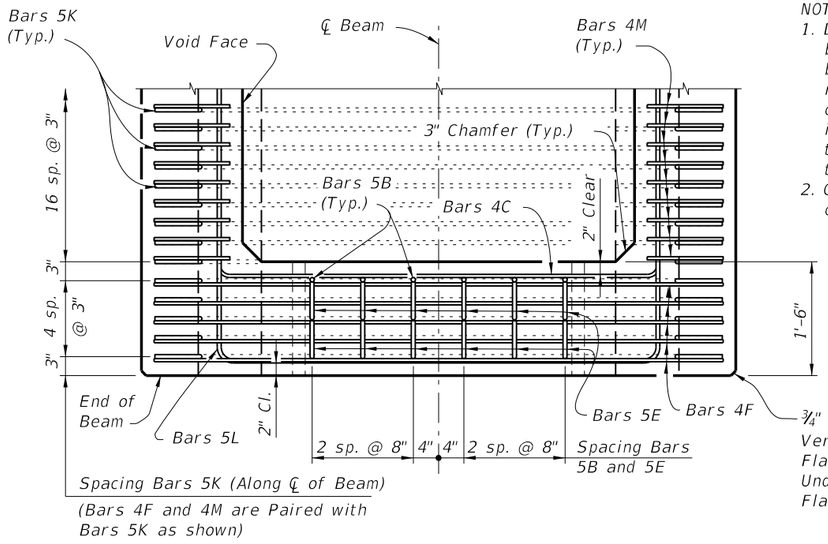

TOP VIEW OF END DIAPHRAGM
(Bars 3D1 And 3D2 Not Shown For Clarity)

Spacing Bars 5K (Along ℄ of Beam)
(Bars 4F and 4M are Paired with
Bars 5K as shown)

¾" Chamfer along the Vertical Face of the Top Flange and Web and Underside of the Top Flange (Typ.)

TOP VIEW OF SKEWED END DIAPHRAGM
AND STIRRUP TRANSITION ZONE
(Bars 3D2 Not Shown For Clarity)

C:\dj\projects\standards\structures\2013book\20248-2of3.dgn
rd960rh
2:22:47 PM
6/28/2012

LAST REVISION	REVISION	DESCRIPTION:			INDEX NO.	SHEET NO.
07/01/05			FDOT DESIGN STANDARDS 2013	FLORIDA U 48 BEAM - STANDARD DETAILS	20248	2

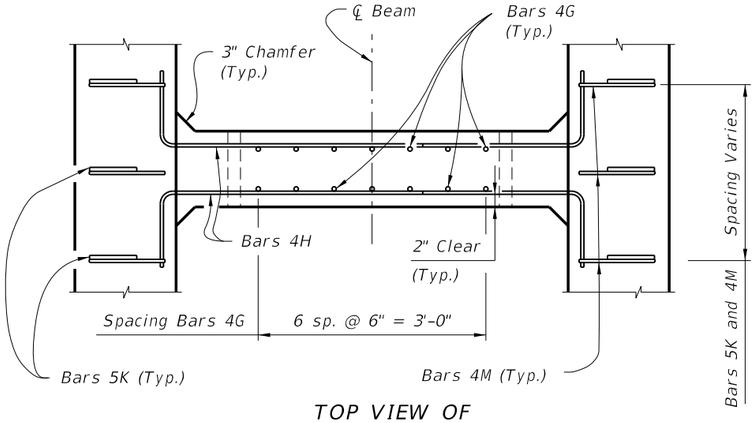

TOP VIEW OF INTERMEDIATE DIAPHRAGM

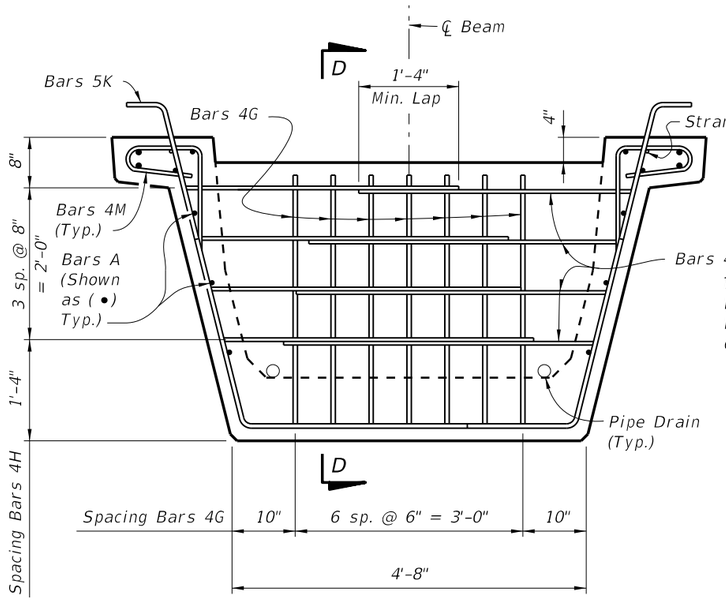

SECTION AT INTERMEDIATE DIAPHRAGM

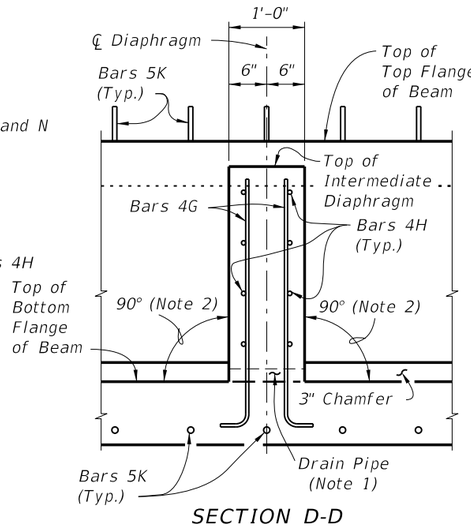

SECTION D-D

NOTES:

1. Drains shall be placed adjacent to each web at each intermediate diaphragm (two drains per intermediate diaphragm). Drain Pipe shall be 2" Nominal Pipe Size, Schedule 80 PVC. Provide removable pipe plugs to prevent concrete entrance during beam casting. Plugs to be removed from the inside after casting.
2. Concrete face may be sloped with a maximum 1:24 draft to facilitate formwork removal.
3. Intermediate diaphragms must be cast and concrete release strength obtained prior to removing beam from casting bed.

CONVENTIONAL REINFORCING STEEL BENDING DIAGRAMS

BILL OF REINFORCING STEEL FOR ONE BEAM ONLY

MARK	SIZE	NO. REQD.	LENGTH
A1	6	4	Dim. L - 4"
A2	4	10	Dim. L - 4"
B	5	12	4'-1"
C	4	16	5'-1"
D1	3	156	1'-6"
D2	3	26	4'-6"
E	5	24	5'-3"
F	4	20	6'-2"
G	4	See Table	4'-0"
H	4	See Table	4'-7"
K	5	See Table	8'-0"
L	5	20	14'-0"
M	4	See Table	3'-11"
N	3/8" Ø Strand	2	Dim. L - 3"

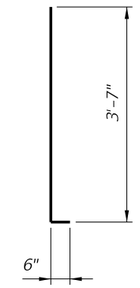

Bars 5B

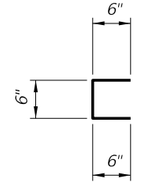

Bars 3D1

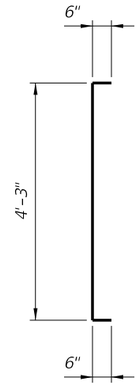

Bars 5E

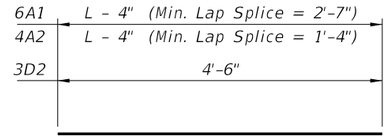

Bars 6A1, 4A2 and 3D2

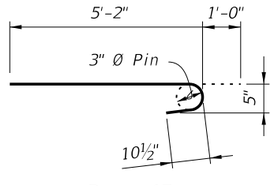

Bars 4F

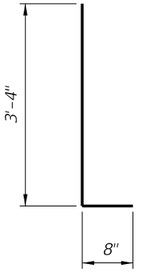

Bars 4G

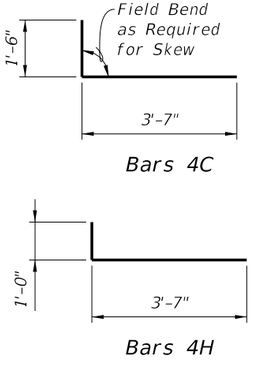

Bars 4C

Bars 4H

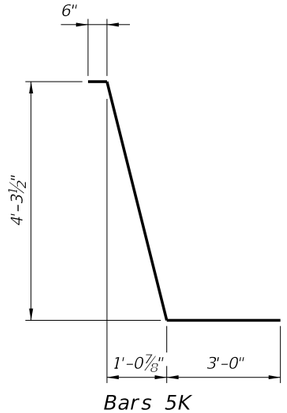

Bars 5K

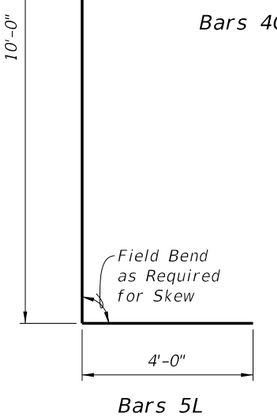

Bars 5L

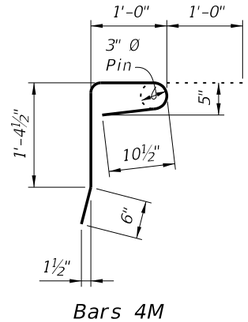

Bars 4M

LAST REVISION	REVISION	DESCRIPTION:				
01/01/11			FDOT DESIGN STANDARDS 2013	FLORIDA U 48 BEAM - STANDARD DETAILS	INDEX NO. 20248	SHEET NO. 3

C:\d\projects\standards\structures\2013book\20248-3of3.dgn rd960rh 2:22:50 PM 6/28/2012

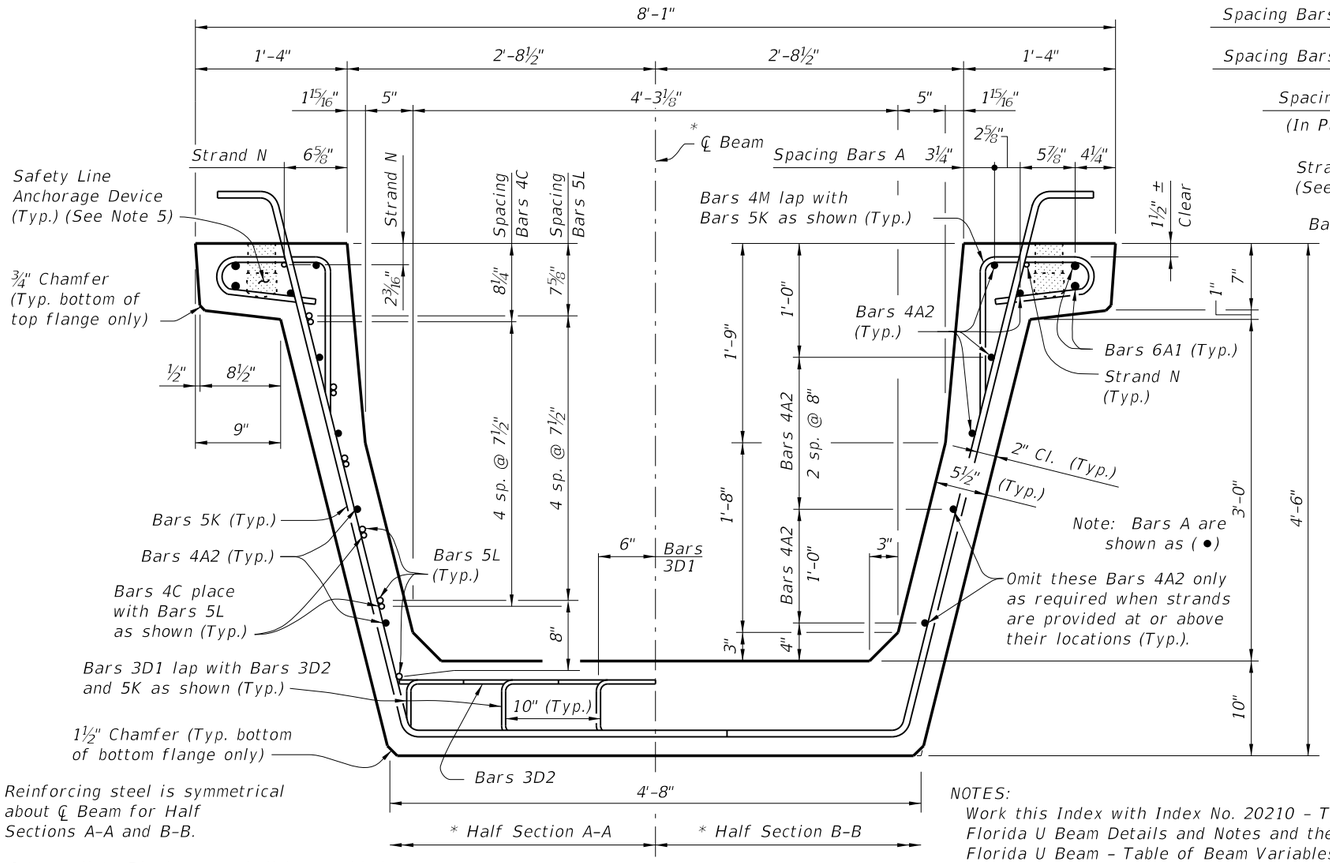

* Reinforcing steel is symmetrical about ℄ Beam for Half Sections A-A and B-B.

** Intermediate Diaphragms shall be provided:
(1) – At midspan.
(2) – At 20'-0" Max. from midspan when beam length (L) exceeds 60 Ft.

TYPICAL SECTION

NOTES:
Work this Index with Index No. 20210 – Typical Florida U Beam Details and Notes and the Florida U Beam – Table of Beam Variables in Structures Plans.

For referenced notes see Index No. 20210.

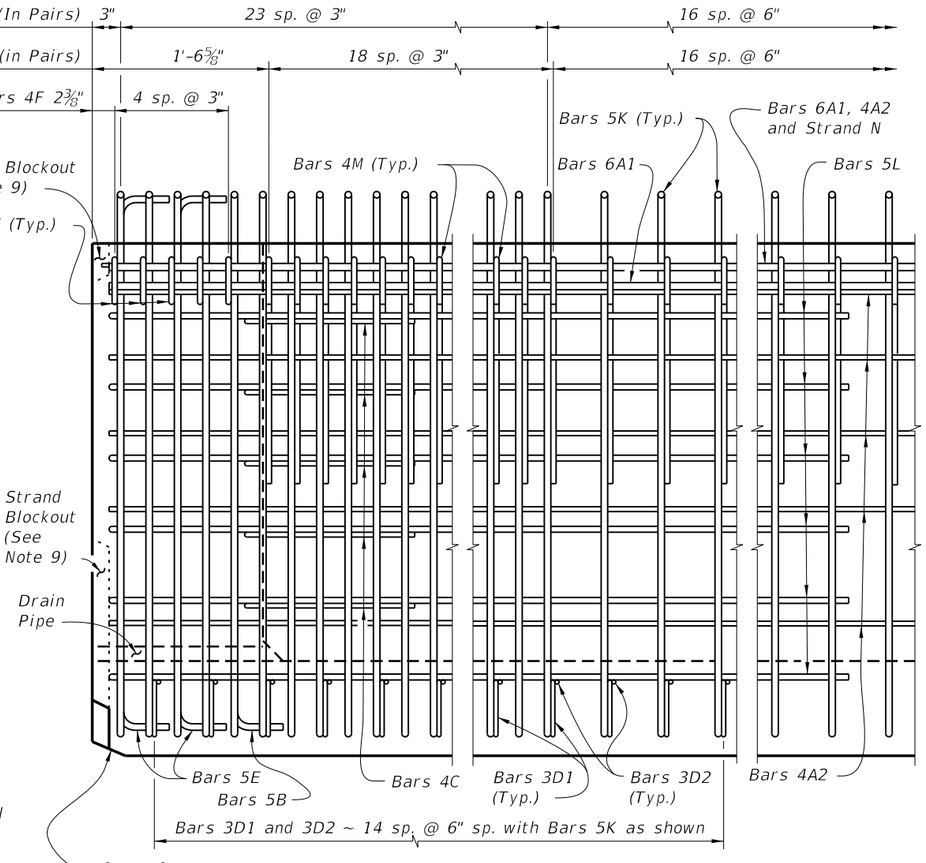

ELEVATION AT END OF BEAM

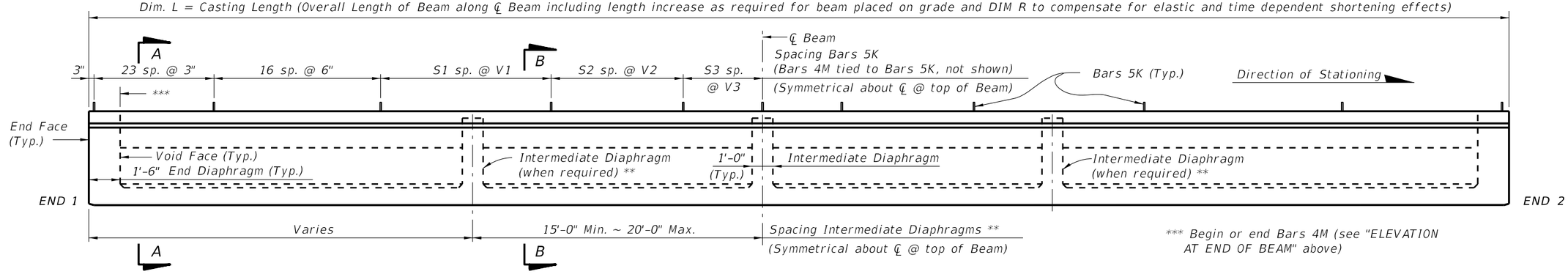

ELEVATION

*** Begin or end Bars 4M (see "ELEVATION AT END OF BEAM" above)

LAST REVISION	REVISION	DESCRIPTION:				
07/01/12			FDOT DESIGN STANDARDS 2013	FLORIDA U 54 BEAM - STANDARD DETAILS	INDEX NO. 20254	SHEET NO. 1

C:\d\projects\standards\structures\2013book\20254-1of3.dgn rd960rh 2:22:52 PM 6/28/2012

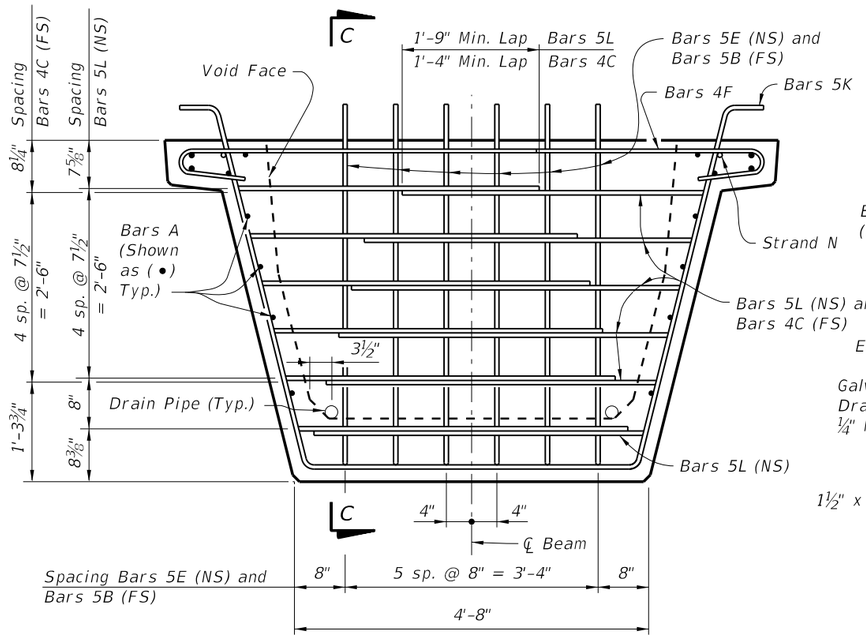

END VIEW AT END DIAPHRAGM

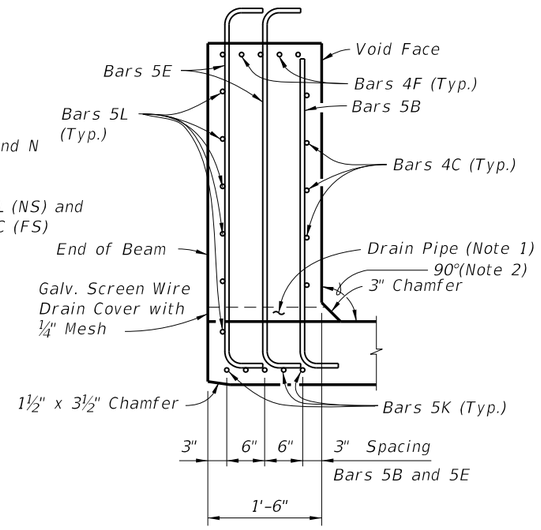

SECTION C-C

NOTES:

1. Drains shall be placed adjacent to each web at each beam end (four drains per beam). Drain Pipe shall be 2" Nominal Pipe Size, Schedule 80 PVC. Provide removable pipe plugs to prevent concrete entrance during beam casting. Plugs to be removed from the inside after casting. Galvanized screen wire shall cover the end of the pipe and bent down around the sides of the pipe, a minimum of 1" and secured prior to casting.
2. Concrete face may be sloped with a maximum 1:24 draft to facilitate formwork removal.

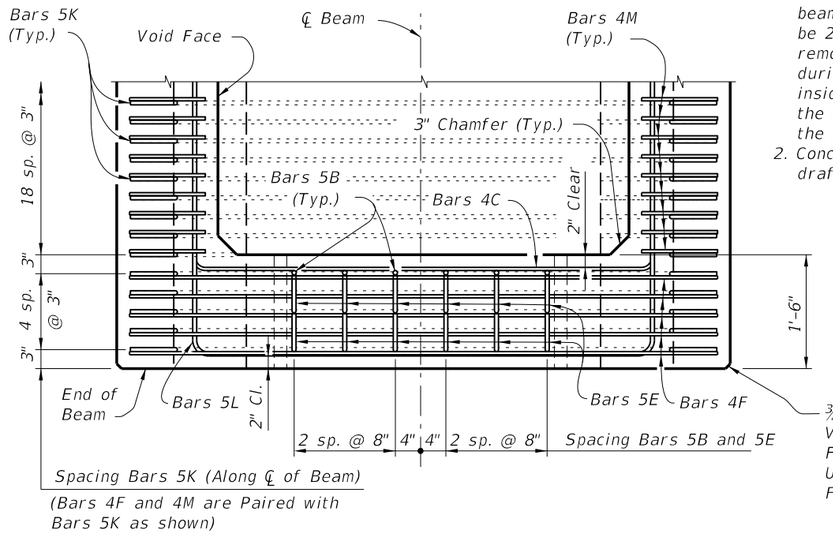

¾" Chamfer along the Vertical Face of the Top Flange and Web and Underside of the Top Flange (Typ.)

TOP VIEW OF END DIAPHRAGM
(Bars 3D1 And 3D2 Not Shown For Clarity)

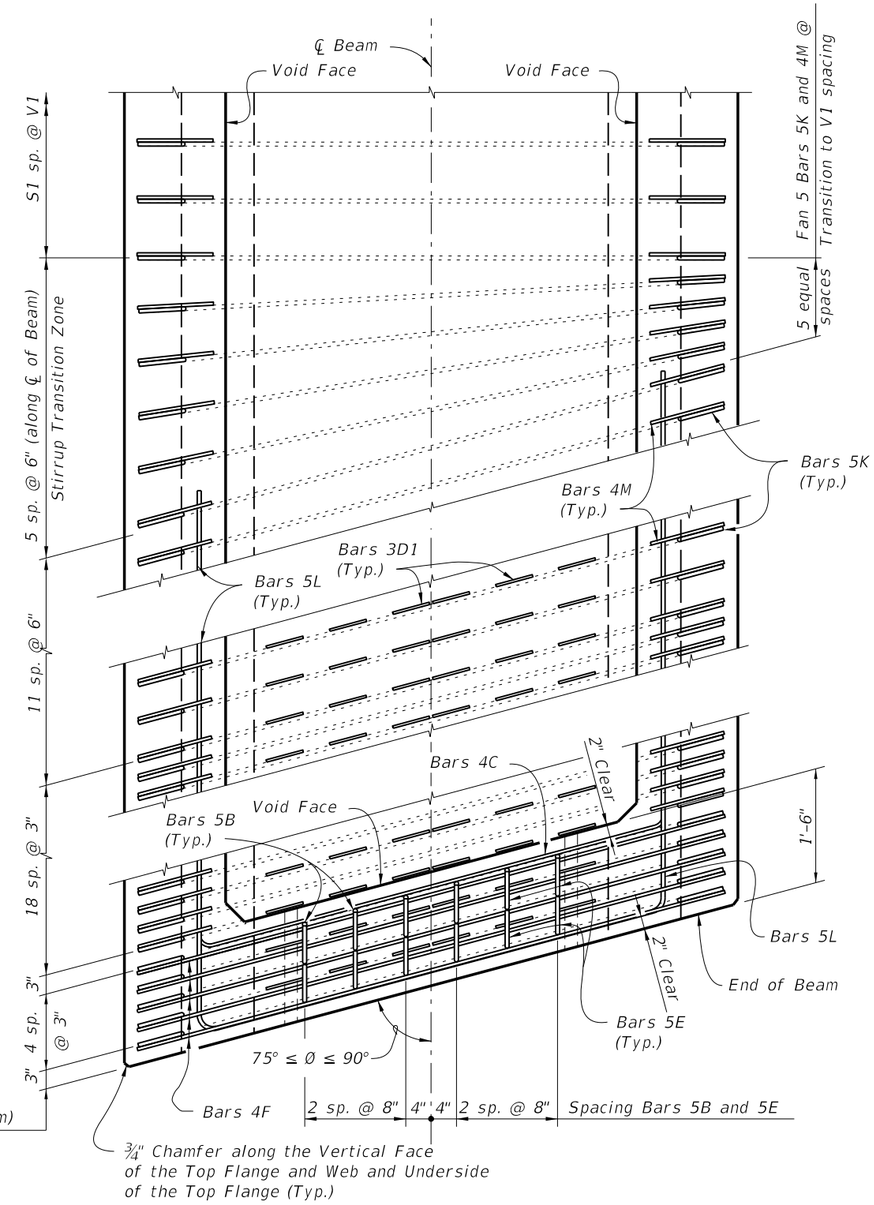

¾" Chamfer along the Vertical Face of the Top Flange and Web and Underside of the Top Flange (Typ.)

TOP VIEW OF SKEWED END DIAPHRAGM
AND STIRRUP TRANSITION ZONE
(Bars 3D2 Not Shown For Clarity)

C:\dj\projects\standards\structures\2013book\20254-2of3.dgn
rd960rh
2:22:55 PM
6/28/2012

LAST REVISION	REVISION	DESCRIPTION:			INDEX NO.	SHEET NO.
07/01/05			FDOT DESIGN STANDARDS 2013	FLORIDA U 54 BEAM - STANDARD DETAILS	20254	2

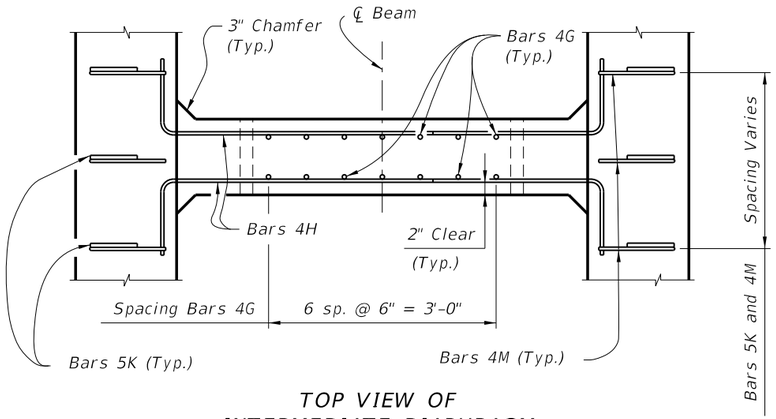

TOP VIEW OF INTERMEDIATE DIAPHRAGM

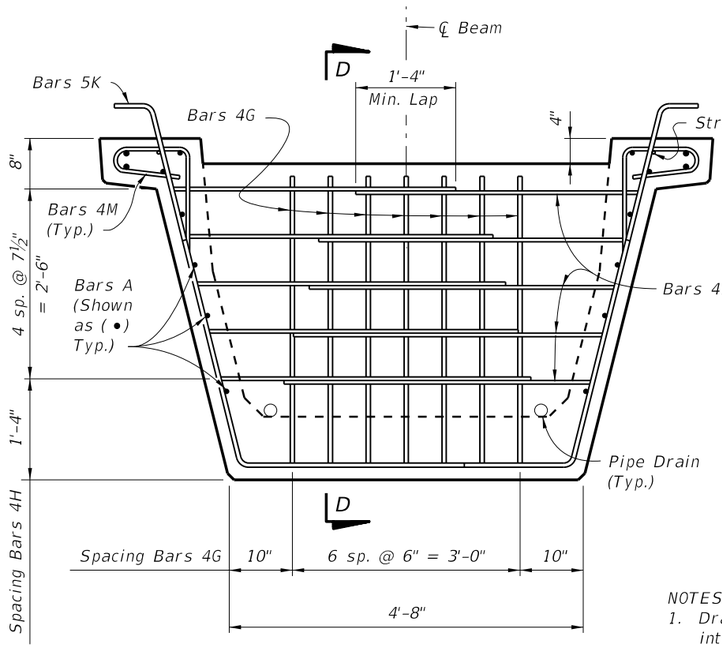

SECTION AT INTERMEDIATE DIAPHRAGM

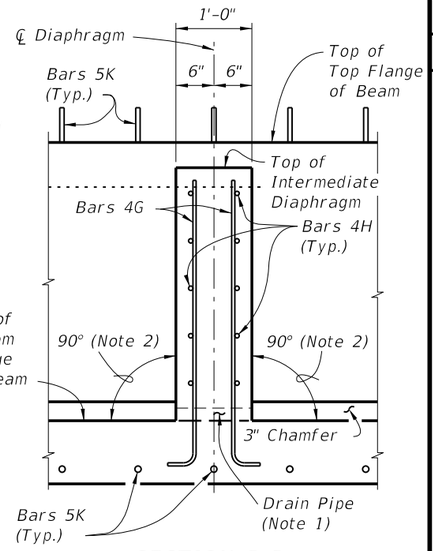

SECTION D-D

NOTES:
1. Drains shall be placed adjacent to each web at each intermediate diaphragm (two drains per intermediate diaphragm). Drain Pipe shall be 2" Nominal Pipe Size, Schedule 80 PVC. Provide removable pipe plugs to prevent concrete entrance during beam casting. Plugs to be removed from the inside after casting.
2. Concrete face may be sloped with a maximum 1:24 draft to facilitate formwork removal.
3. Intermediate diaphragms must be cast and concrete release strength obtained prior to removing beam from casting bed.

CONVENTIONAL REINFORCING STEEL BENDING DIAGRAMS

BILL OF REINFORCING STEEL FOR ONE BEAM ONLY

MARK	SIZE	NO. REQD.	LENGTH
A1	6	4	Dim. L – 4"
A2	4	12	Dim. L – 4"
B	5	12	4'-7"
C	4	20	5'-3"
D1	3	180	1'-6"
D2	3	30	4'-6"
E	5	24	5'-9"
F	4	20	6'-4"
G	4	See Table	4'-6"
H	4	See Table	4'-9"
K	5	See Table	8'-6"
L	5	24	16'-2"
M	4	See Table	3'-11"
N	⅜" Ø Strand	2	Dim. L – 3"

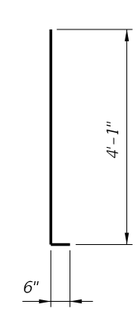

Bars 5B

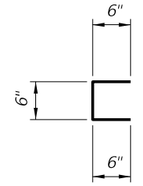

Bars 3D1

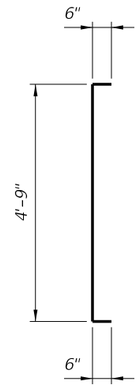

Bars 5E

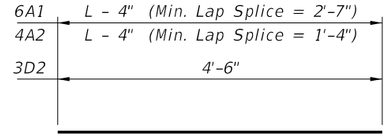

Bars 6A1, 4A2 and 3D2

Bars 4F

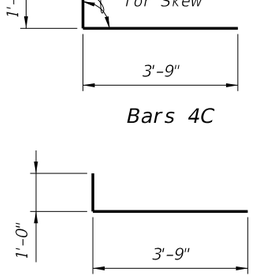

Bars 4G

Bars 4C

Bars 4H

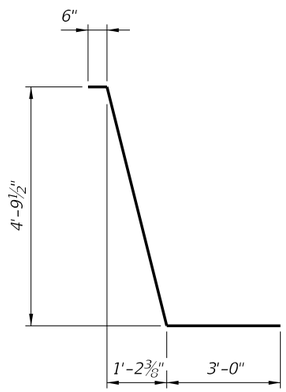

Bars 5K

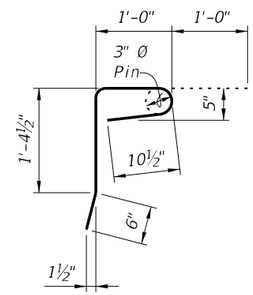

Bars 4M

6/28/2012 2:22:57 PM rd960rh C:\d\projects\standards\structures\2013book\20254-3of3.dgn

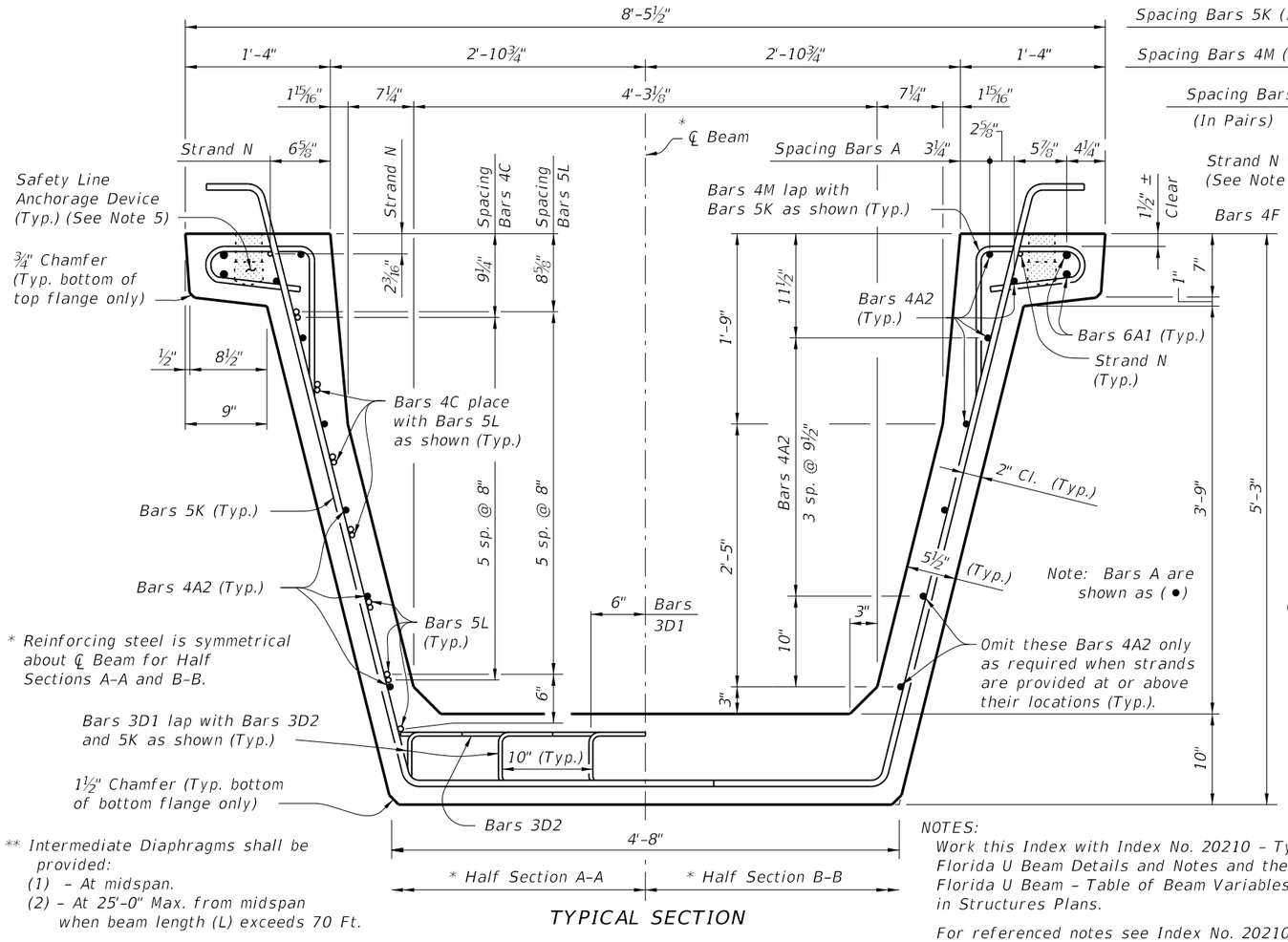

** Intermediate Diaphragms shall be provided:
(1) – At midspan.
(2) – At 25'-0" Max. from midspan when beam length (L) exceeds 70 Ft.

TYPICAL SECTION

NOTES:
Work this Index with Index No. 20210 – Typical Florida U Beam Details and Notes and the Florida U Beam – Table of Beam Variables in Structures Plans.

For referenced notes see Index No. 20210.

ELEVATION AT END OF BEAM

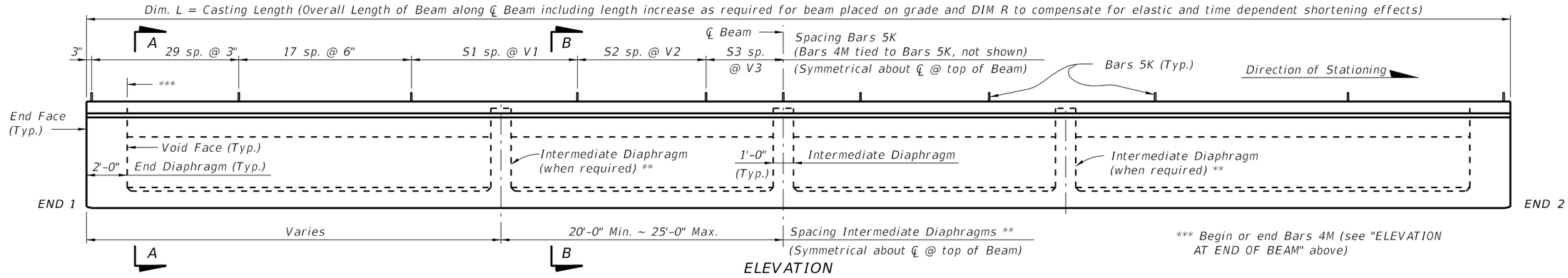

ELEVATION

*** Begin or end Bars 4M (see "ELEVATION AT END OF BEAM" above)

LAST REVISION	REVISION	DESCRIPTION:				
07/01/12			FDOT DESIGN STANDARDS 2013	FLORIDA U 63 BEAM - STANDARD DETAILS	INDEX NO. 20263	SHEET NO. 1

C:\d\projects\standards\structures\2013book\20263-1of3.dgn rd960rh 2:23:00 PM 6/28/2012

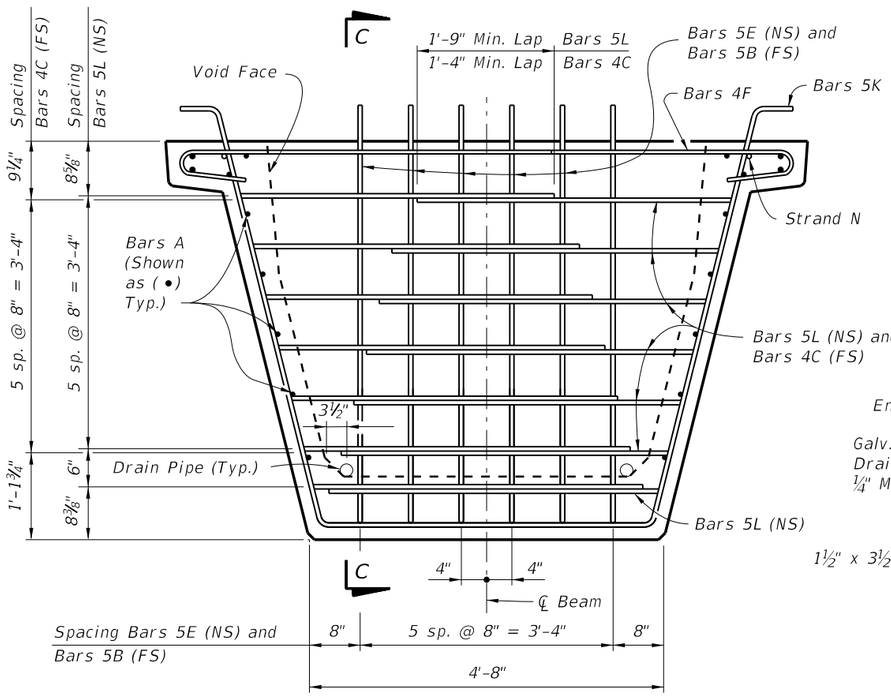

END VIEW AT END DIAPHRAGM

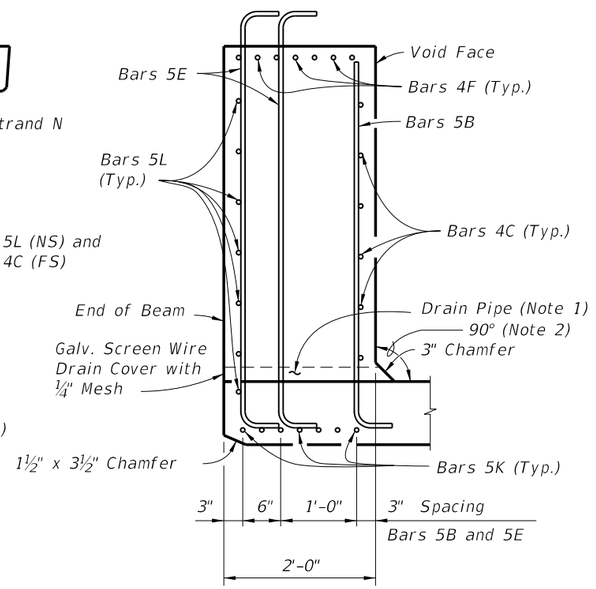

SECTION C-C

NOTES:
1. Drains shall be placed adjacent to each web at each beam end (four drains per beam). Drain Pipe shall be 2" Nominal Pipe Size, Schedule 80 PVC. Provide removable pipe plugs to prevent concrete entrance during beam casting. Plugs to be removed from the inside after casting. Galvanized screen wire shall cover the end of the pipe and bent down around the sides of the pipe, a minimum of 1" and secured prior to casting.
2. Concrete face may be sloped with a maximum 1:24 draft to facilitate formwork removal.

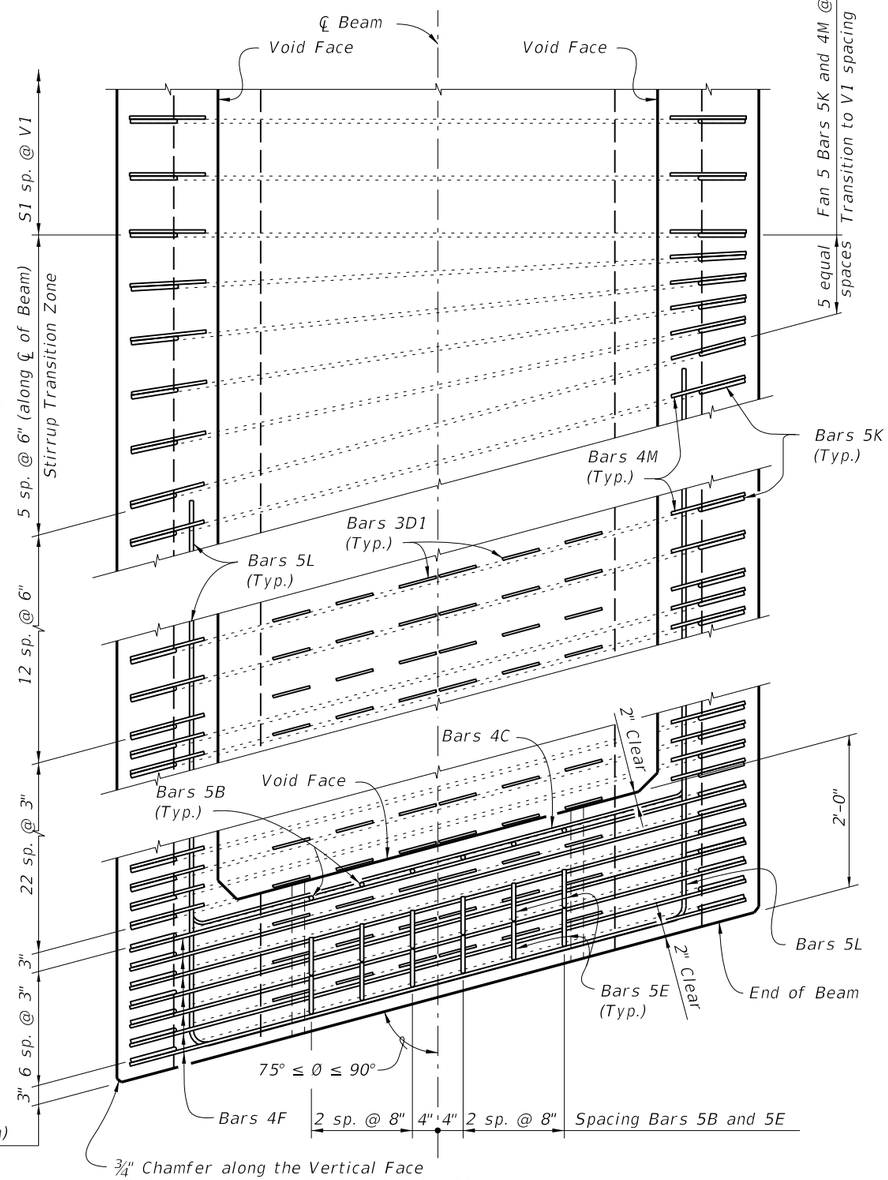

TOP VIEW OF SKEWED END DIAPHRAGM
AND STIRRUP TRANSITION ZONE
(Bars 3D1 Not Shown For Clarity)

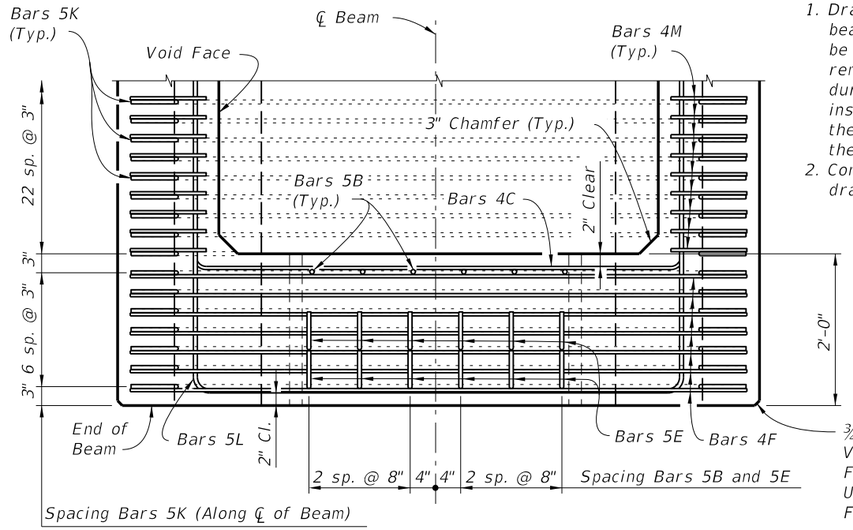

TOP VIEW OF END DIAPHRAGM
(Bars 3D1 And 3D2 Not Shown For Clarity)

¾" Chamfer along the Vertical Face of the Top Flange and Web and Underside of the Top Flange (Typ.)

C:\d\projects\standards\structures\2013book\20263-2of3.dgn
rd960rh
2:23:02 PM
6/28/2012

LAST REVISION	REVISION	DESCRIPTION:				
07/01/05			FDOT DESIGN STANDARDS 2013	FLORIDA U 63 BEAM - STANDARD DETAILS	INDEX NO. 20263	SHEET NO. 2

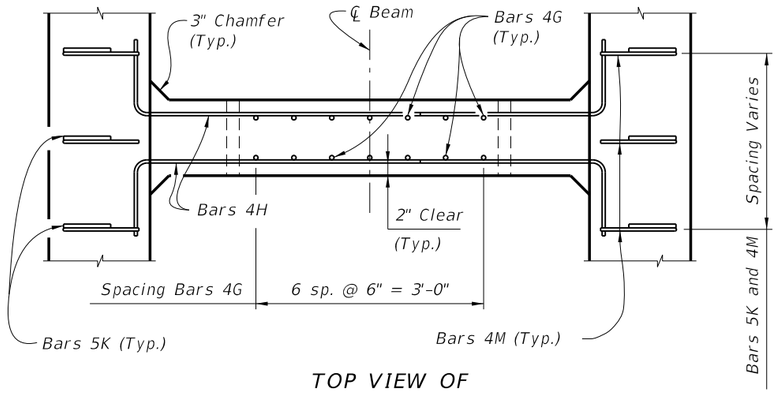

TOP VIEW OF INTERMEDIATE DIAPHRAGM

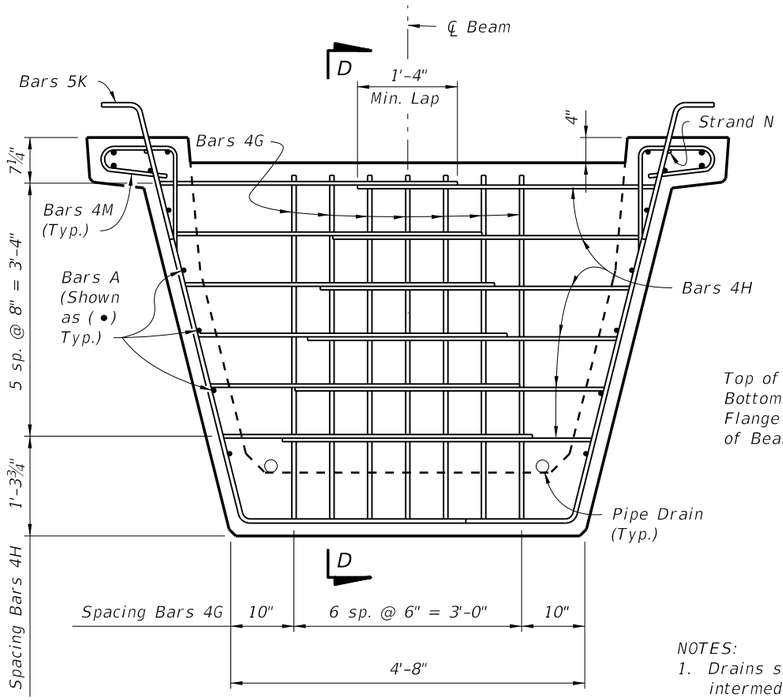

SECTION AT INTERMEDIATE DIAPHRAGM

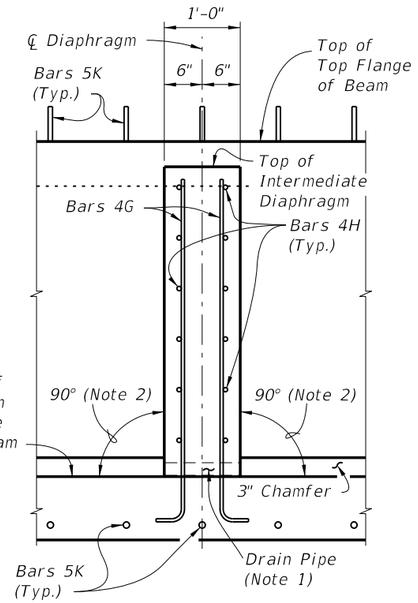

SECTION D-D

NOTES:
1. Drains shall be placed adjacent to each web at each intermediate diaphragm (two drains per intermediate diaphragm). Drain Pipe shall be 2" Nominal Pipe Size, Schedule 80 PVC. Provide removable pipe plugs to prevent concrete entrance during beam casting. Plugs to be removed from the inside after casting.
2. Concrete face may be sloped with a maximum 1:24 draft to facilitate formwork removal.
3. Intermediate diaphragms must be cast and concrete release strength obtained prior to removing beam from casting bed.

CONVENTIONAL REINFORCING STEEL BENDING DIAGRAMS

BILL OF REINFORCING STEEL FOR ONE BEAM ONLY

MARK	SIZE	NO. REQD.	LENGTH
A1	6	4	Dim. L – 4"
A2	4	12	Dim. L – 4"
B	5	12	5'-4"
C	4	24	5'-5"
D1	3	204	1'-6"
D2	3	34	4'-6"
E	5	24	6'-6"
F	4	28	6'-6"
G	4	See Table	5'-3"
H	4	See Table	4'-11"
K	5	See Table	9'-2½"
L	5	28	17'-8"
M	4	See Table	3'-11"
N	⅜" Ø Strand	2	Dim. L – 3"

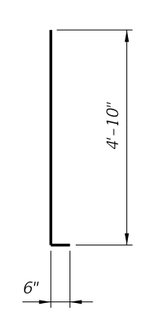

Bars 5B

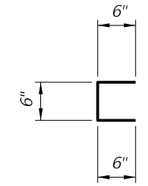

Bars 3D1

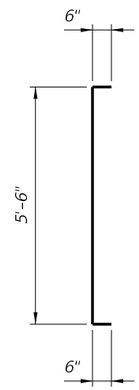

Bars 5E

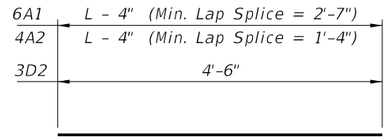

Bars 6A1, 4A2 and 3D2

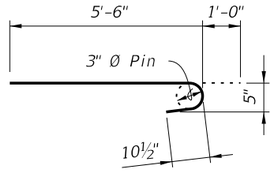

Bars 4F

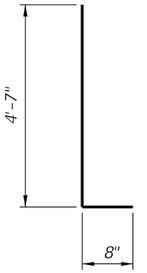

Bars 4G

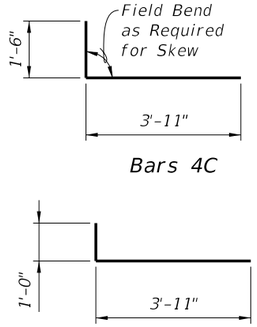

Bars 4C

Bars 4H

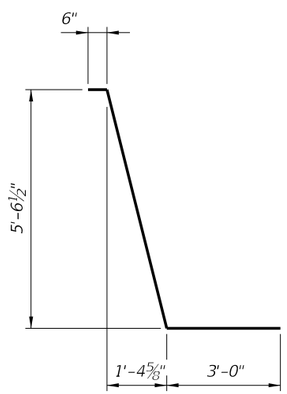

Bars 5K

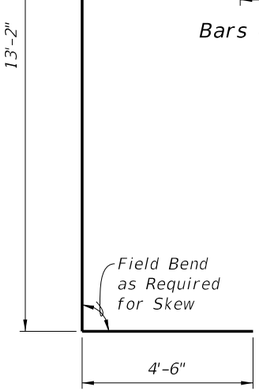

Bars 5L

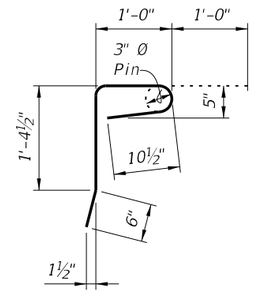

Bars 4M

LAST REVISION	REVISION	DESCRIPTION:				
01/01/11			FDOT DESIGN STANDARDS 2013	FLORIDA U 63 BEAM - STANDARD DETAILS	INDEX NO. 20263	SHEET NO. 3

6/28/2012 2:23:04 PM rd960rh C:\d\projects\standards\structures\2013book\20263-3of3.dgn

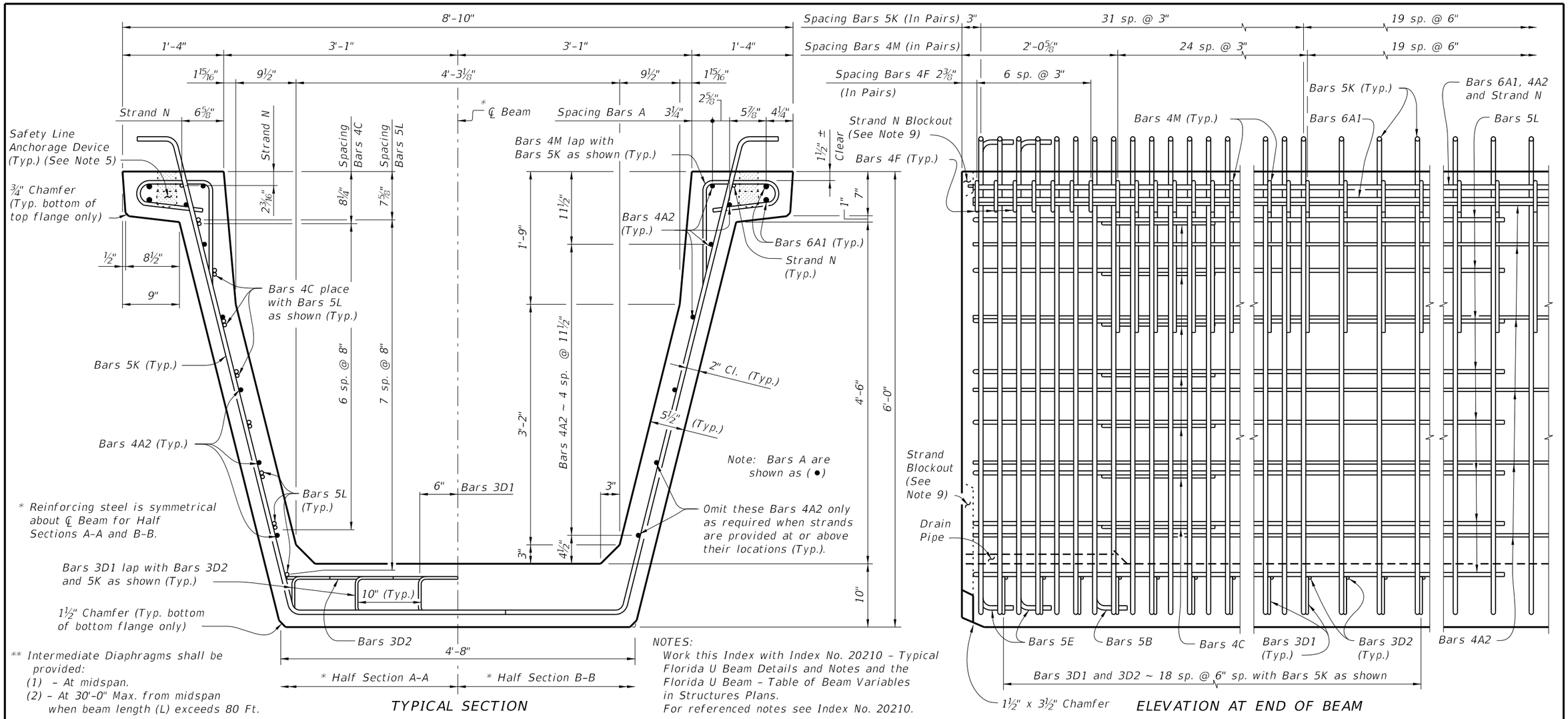

C:\d\projects\standards\structures\2013book\20272-1of3.dgn rd960rh 2:23:07 PM 6/28/2012

LAST REVISION	REVISION	DESCRIPTION:				
07/01/12			FDOT DESIGN STANDARDS 2013	FLORIDA U 72 BEAM - STANDARD DETAILS	INDEX NO. 20272	SHEET NO. 1

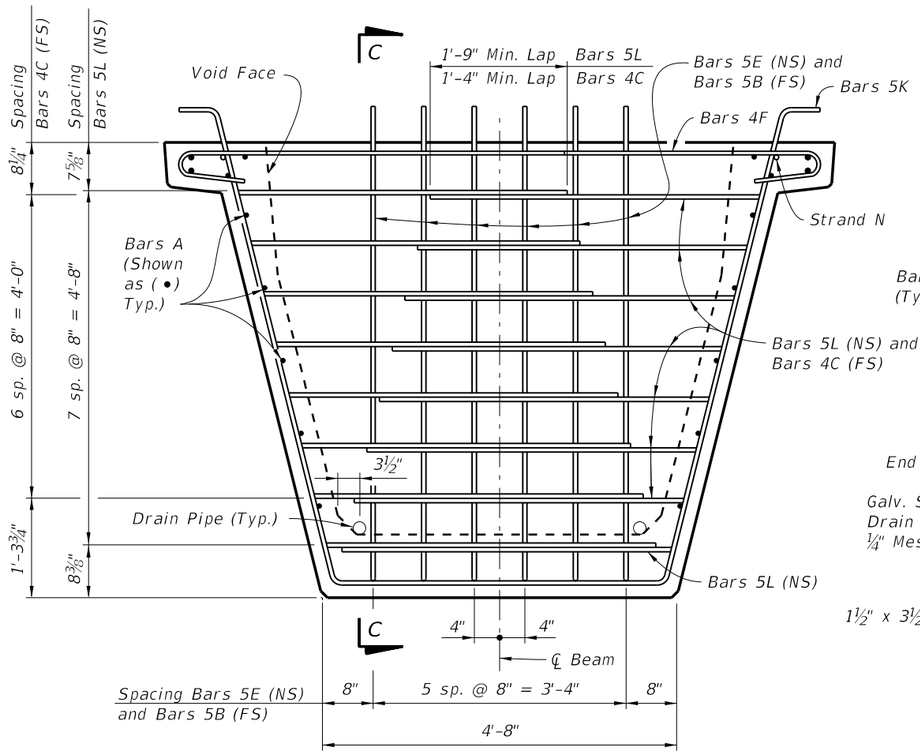

END VIEW AT END DIAPHRAGM

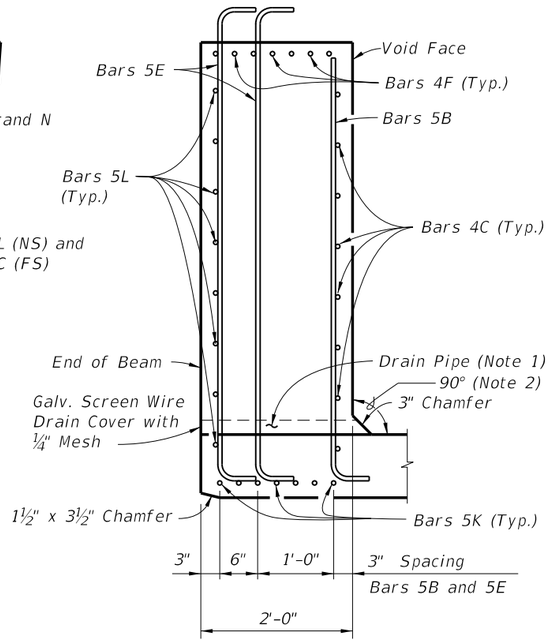

SECTION C-C

NOTES:

1. Drains shall be placed adjacent to each web at each beam end (four drains per beam). Drain Pipe shall be 2" Nominal Pipe Size, Schedule 80 PVC. Provide removable pipe plugs to prevent concrete entrance during beam casting. Plugs to be removed from the inside after casting. Galvanized screen wire shall cover the end of the pipe and bent down around the sides of the pipe, a minimum of 1" and secured prior to casting.
2. Concrete face may be sloped with a maximum 1:24 draft to facilitate formwork removal.

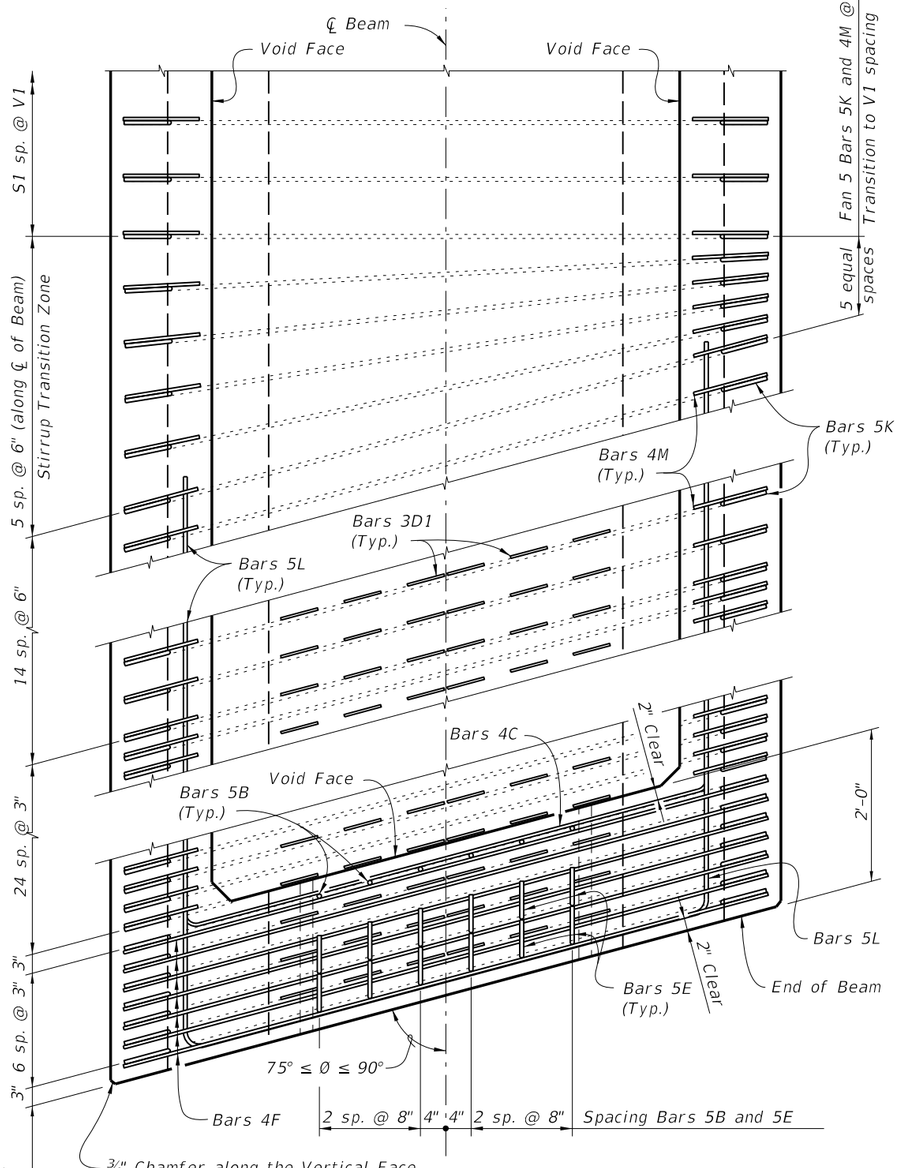

TOP VIEW OF SKEWED END DIAPHRAGM
AND STIRRUP TRANSITION ZONE
(Bars 3D1 Not Shown For Clarity)

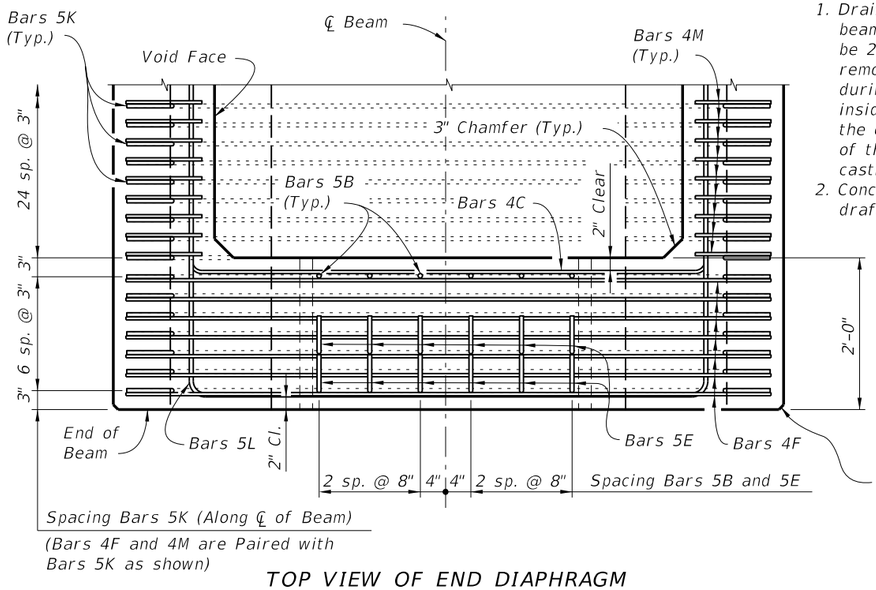

TOP VIEW OF END DIAPHRAGM
(Bars 3D1 And 3D2 Not Shown For Clarity)

C:\d\projects\standards\structures\2013book\20272-2of3.dgn
rd960rh
2:23:11 PM
6/28/2012

LAST REVISION	REVISION	DESCRIPTION:				
07/01/05			FDOT DESIGN STANDARDS 2013	FLORIDA U 72 BEAM - STANDARD DETAILS	INDEX NO. 20272	SHEET NO. 2

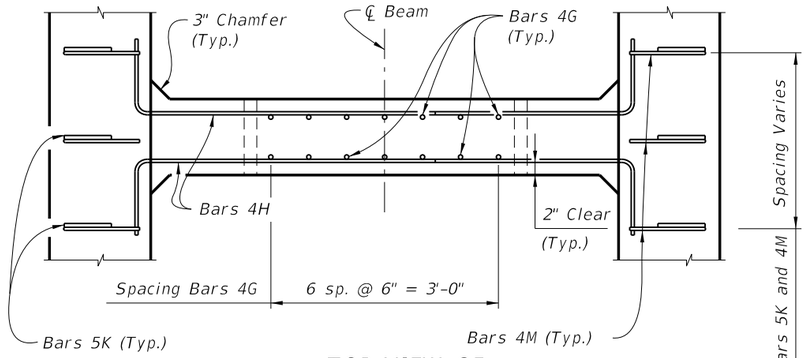

TOP VIEW OF INTERMEDIATE DIAPHRAGM

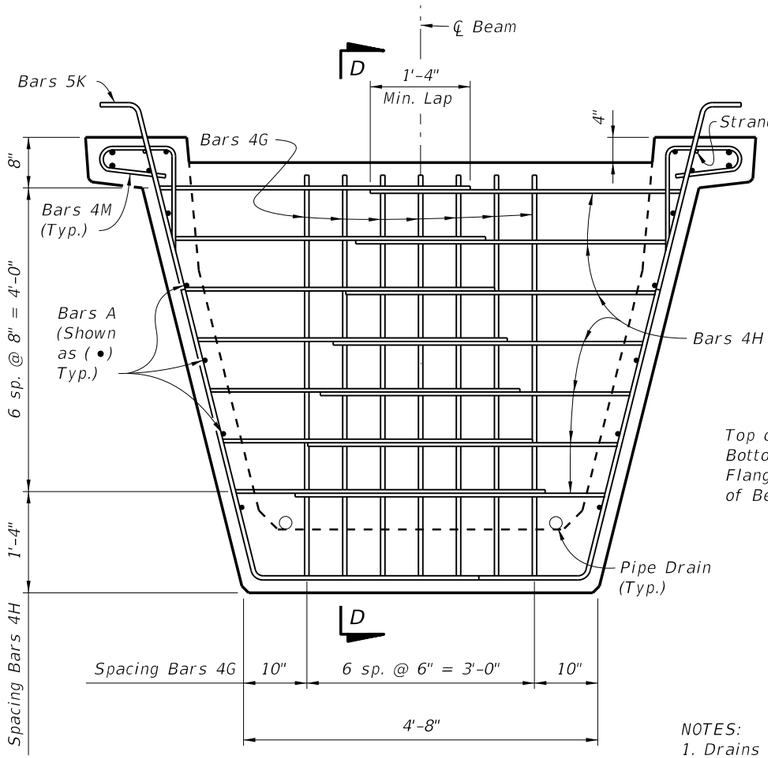

SECTION AT INTERMEDIATE DIAPHRAGM

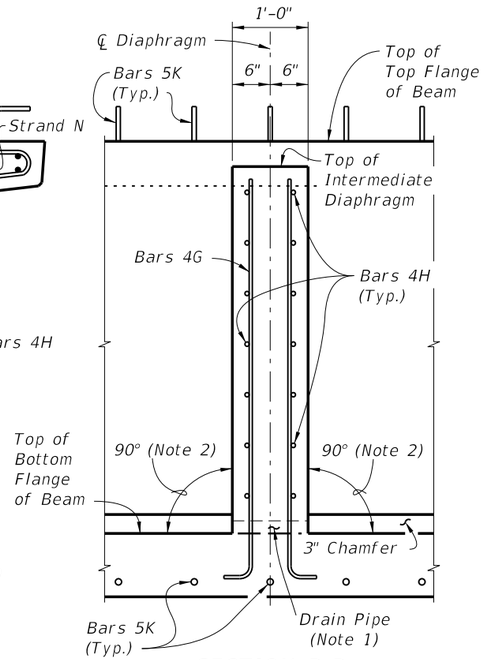

SECTION D-D

NOTES:
1. Drains shall be placed adjacent to each web at each intermediate diaphragm (two drains per intermediate diaphragm). Drain Pipe shall be 2" Nominal Pipe Size, Schedule 80 PVC. Provide removable pipe plugs to prevent concrete entrance during beam casting. Plugs to be removed from the inside after casting.
2. Concrete face may be sloped with a maximum 1:24 draft to facilitate formwork removal.
3. Intermediate diaphragms must be cast and concrete release strength obtained prior to removing beam from casting bed.

CONVENTIONAL REINFORCING STEEL BENDING DIAGRAMS

BILL OF REINFORCING STEEL FOR ONE BEAM ONLY

MARK	SIZE	NO. REQD.	LENGTH
A1	6	4	Dim. L – 4"
A2	4	14	Dim. L – 4"
B	5	12	6'-1"
C	4	28	5'-7"
D1	3	228	1'-6"
D2	3	38	4'-6"
E	5	24	7'-3"
F	4	28	6'-9"
G	4	See Table	6'-0"
H	4	See Table	5'-1"
K	5	See Table	10'-0"
L	5	32	19'-6"
M	4	See Table	3'-11"
N	3/8" Ø Strand	2	Dim. L – 3"

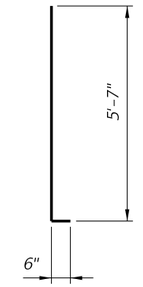

Bars 5B

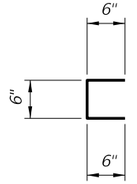

Bars 3D1

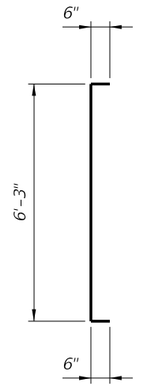

Bars 5E

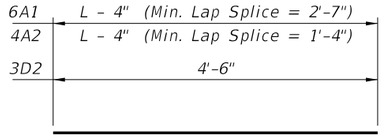

Bars 6A1, 4A2 and 3D2

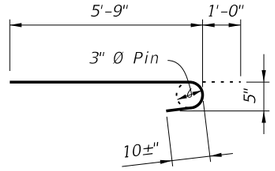

Bars 4F

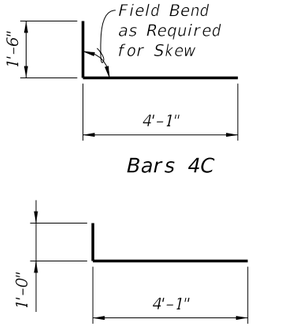

Bars 4G

Bars 4C

Bars 4H

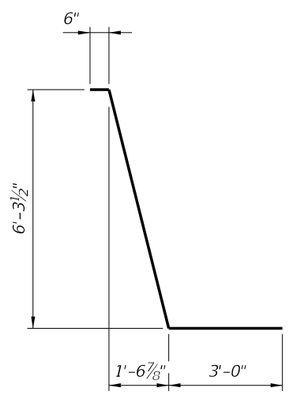

Bars 5K

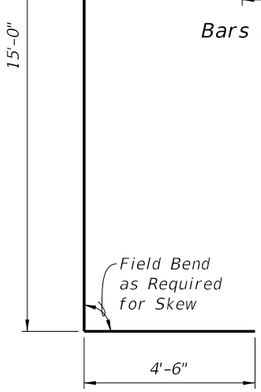

Bars 5L

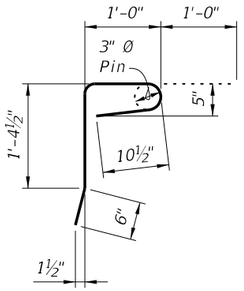

Bars 4M

C:\d\projects\standards\structures\2013book\20272-3of3.dgn rd960rh 2:23:14 PM 6/28/2012

LAST REVISION	REVISION	DESCRIPTION:			INDEX NO.	SHEET NO.
07/01/05			FDOT DESIGN STANDARDS 2013	FLORIDA U 72 BEAM - STANDARD DETAILS	20272	3

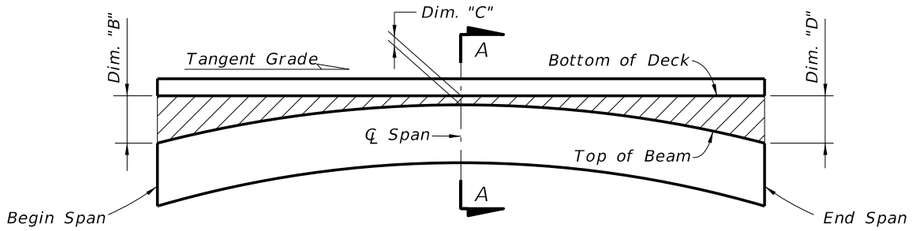

BUILD-UP DIAGRAM FOR TANGENT SPANS
(ALONG ℄ FLANGE) (CASE 1)

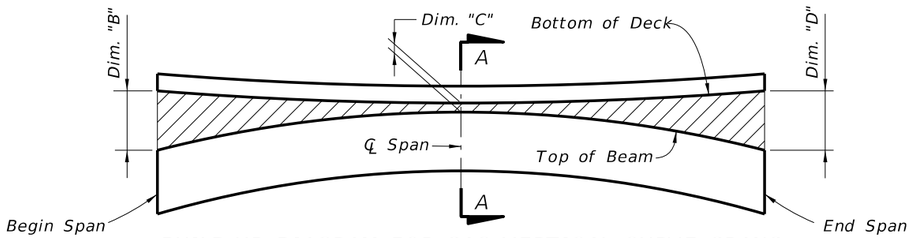

BUILD-UP DIAGRAM FOR SAG VERTICAL CURVE SPANS
(ALONG ℄ FLANGE) (CASE 2)

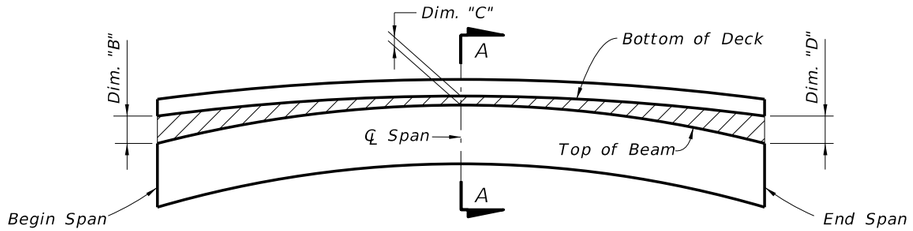

BUILD-UP DIAGRAM FOR CREST VERTICAL CURVE SPANS
- CONTROL AT ℄ SPAN
(ALONG ℄ FLANGE) (CASE 3)

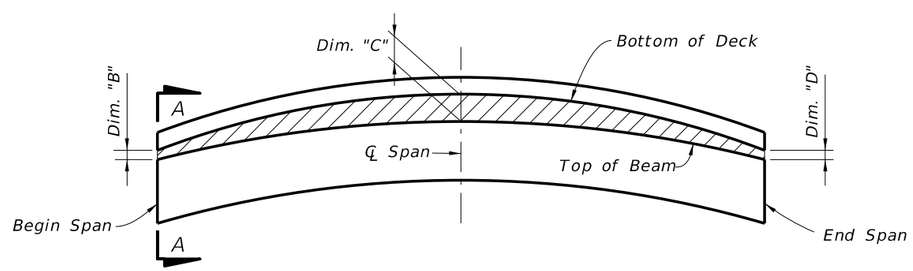

BUILD-UP DIAGRAM FOR CREST VERTICAL CURVE SPANS
- CONTROL AT BEGIN OR END SPAN
(ALONG ℄ FLANGE) (CASE 4)

BEAM CAMBER AND BUILD-UP NOTES:

The build-up values given in the Data Table are based on theoretical beam cambers. The Contractor shall monitor beam cambers for the purpose of predicting camber values at the time of the deck pour. If the predicted cambers based on field measurements differ more than +/- ½" from the theoretical "Net Beam Camber @ 120 Days" shown in the Data Table*, obtain approval from the Engineer to modify the build-up dimensions as required. When the measured beam cambers create a conflict with the bottom mat of deck steel, notify the Engineer a minimum of 21 days prior to casting.*

Dim. "A" includes the weight of the Stay-In-Place Formwork.

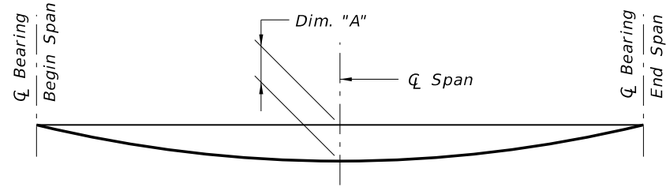

DEAD LOAD DEFLECTION DIAGRAM
(ALONG ℄ BEAM)

* Dimensions are along slope.

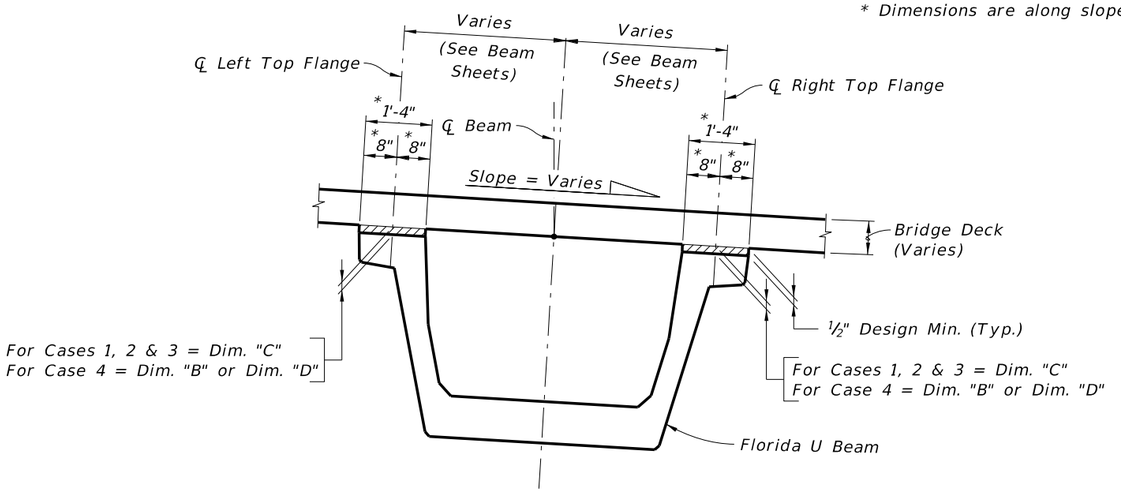

SECTION A-A
BUILD-UP OVER BEAMS
(LOOKING AHEAD STATION)

SAFSADKFSAJDFLKJSDLF

* NOTE:
Work this Index with the Build-up and Deflection Data Table for Florida U Beams in Structures Plans.

LAST REVISION	REVISION	DESCRIPTION:			INDEX NO.	SHEET NO.
01/01/11			FDOT DESIGN STANDARDS 2013	BUILD-UP & DEFLECTION DATA FOR FLORIDA U BEAMS	20299	1

C:\d\projects\standards\structures\2013book\20299-1of1.dgn
rd960rh
2:23:16 PM
6/28/2012

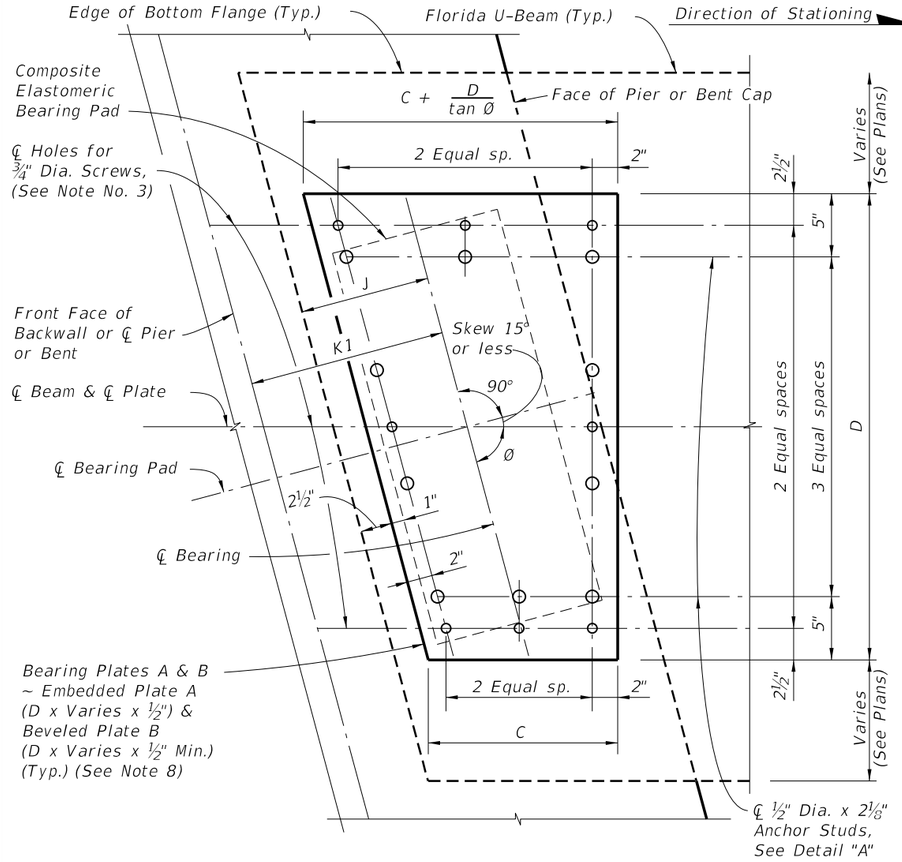

PLAN VIEW OF TYPICAL SINGLE BEARING

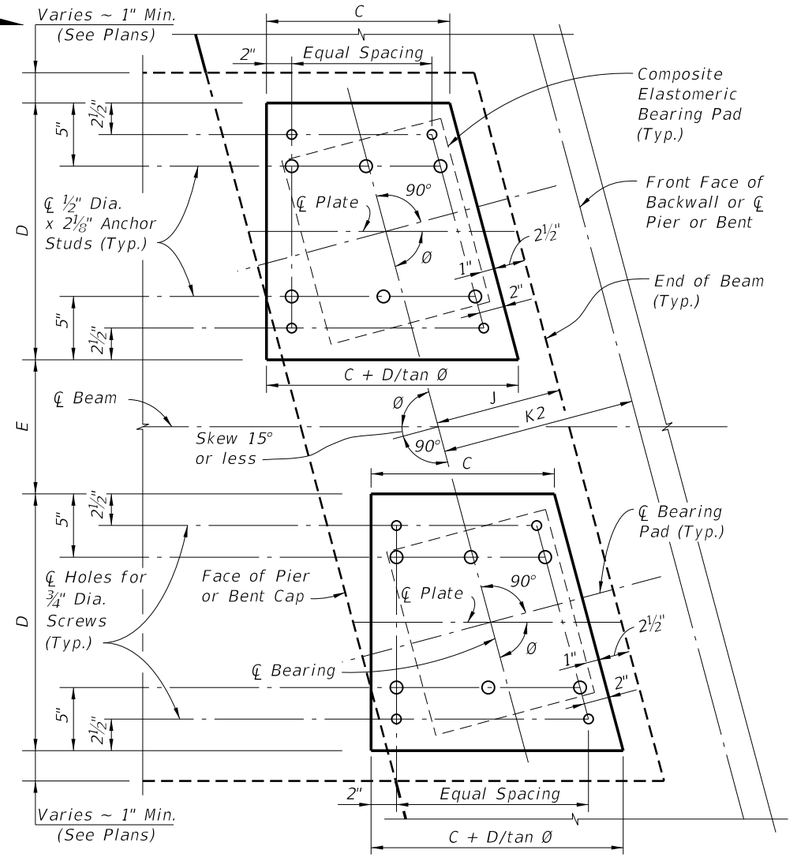

PLAN VIEW OF TYPICAL DOUBLE BEARING

NOTES:

1. Work this sheet with the 'BEVELED BEARING PLATE DATA TABLE' in the plans.
2. Beveled Bearing Plates B with Embedded Bearing Plates A are required for beams only as scheduled in the 'TABLE OF BEAM VARIABLES' on Beam Sheets.
3. Bearing plate material shall conform to ASTM A36 or ASTM A709 (Grade 36 or 50). Headed Concrete Anchor Studs shall conform to Specification Section 502. Hot-dip galvanized Bearing Plates A & B after fabrication except Galvanized Caps may be welded in place after hot-dip galvanizing. Drill Bearing Plates A and B as an assembled unit, thread Bearing Plate A only. Drill and thread holes perpendicular to bottom of Plate B and prior to plates being galvanized (ASTM A 123).
4. Provide Electroplated, Flat Countersunk Head Cap Screws in accordance with ASTM F 835. Electroplating shall be ASTM B 633, SC 2, Type 1. Provide screws long enough to maintain a ¾" minimum embedment into Embedded Bearing Plate A and Galvanized Cap. Provide steel Galvanized Caps with ½" Min. to 1½" Max. height and nominal 1" inside diameter.
5. Include the cost of Beveled Bearing Plates in the pay item for Prestressed Beams (Florida U-Beams).
6. For Dimensions C and D, see 'BEVELED BEARING PLATE DATA TABLE' in the Structures Plans. For Dimensions J, K1 and K2, see 'TABLE OF BEAM VARIABLES' on Beam Sheets.
7. All details and dimensions shown are along ℄ Beam for single bearings or ℄ Plate parallel to ℄ Beam for double bearings, except for dimensions to ¾" Dia. Screws and ½" Dia. x 2⅛" Anchor Studs, which are along ℄ Screws or ℄ Anchor Studs. Positive Slope shown, Negative Slope similar.
8. When Skew = 0°, dimensions for Embedded Bearing Plate A are D x C x ½" and for Beveled Plate B are D x C x ½" Min.

PLAN
(0° < Skew ≤ 15° shown, Skew = 0° Similar)

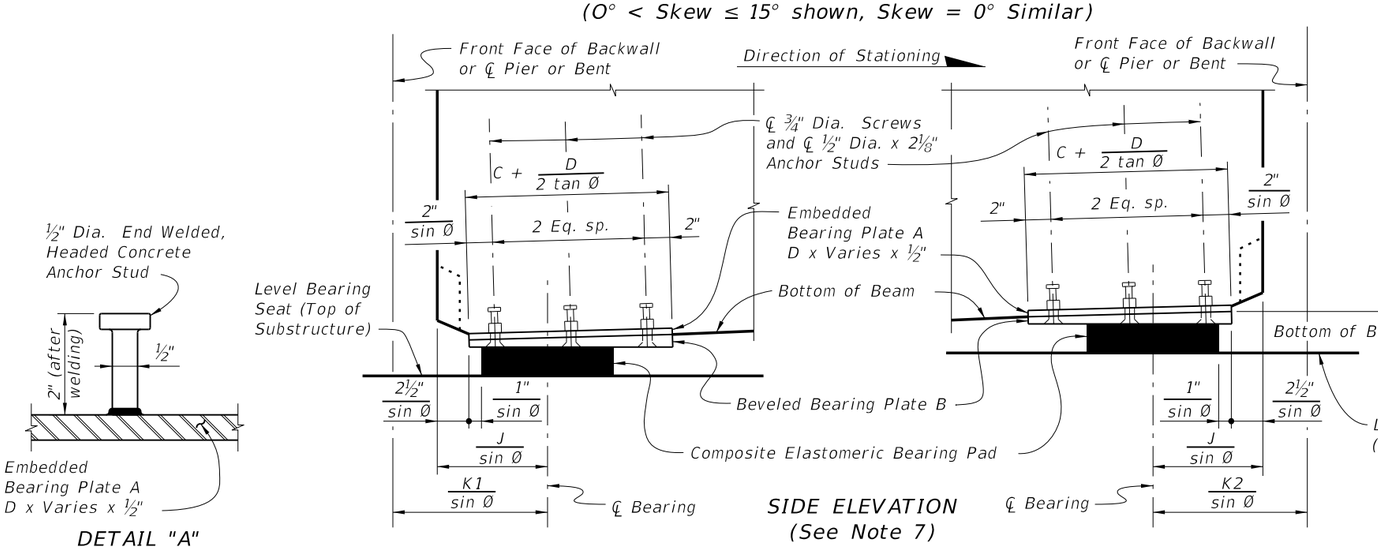

DETAIL "A"

SIDE ELEVATION
(See Note 7)

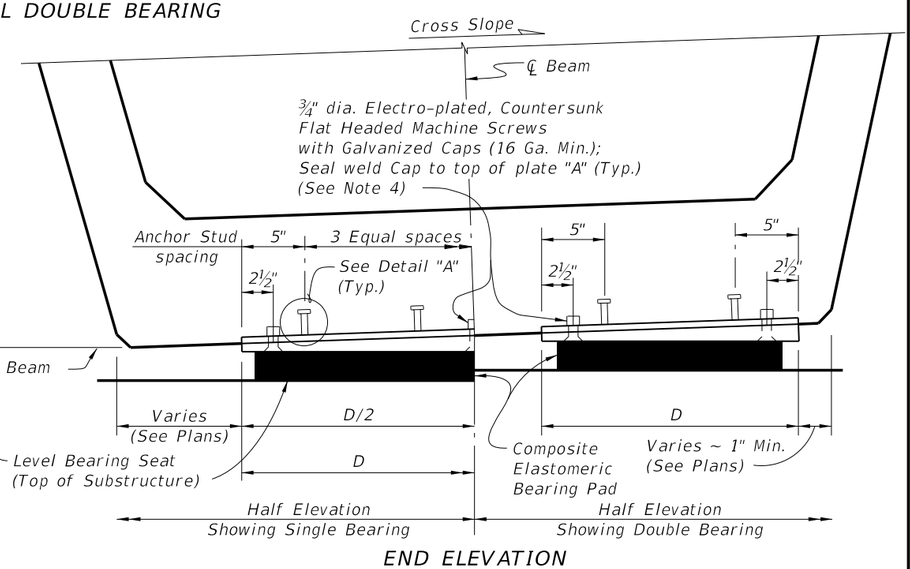

END ELEVATION
(Positive Cross Slope shown, Negative Cross Slope similar)

LAST REVISION	REVISION	DESCRIPTION:		FDOT DESIGN STANDARDS 2013	BEVELED BEARING PLATE DETAILS - PRESTRESSED FLORIDA-U BEAMS	INDEX NO.	SHEET NO.
01/01/10						20502	1

C:\d\projects\standards\structures\2013book\20502-1of1.dgn rd960rh 2:23:18 PM 6/28/2012

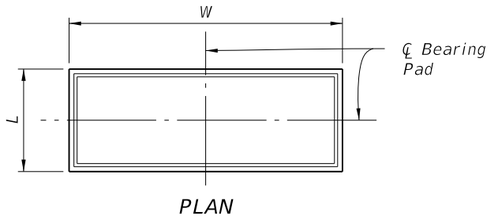

PLAN

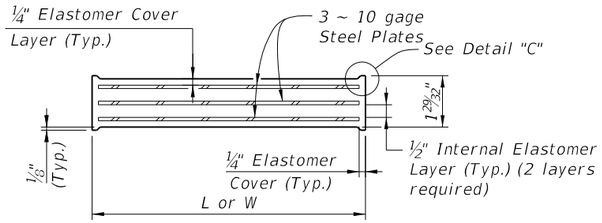

TYPICAL SECTION TYPE D & E PAD

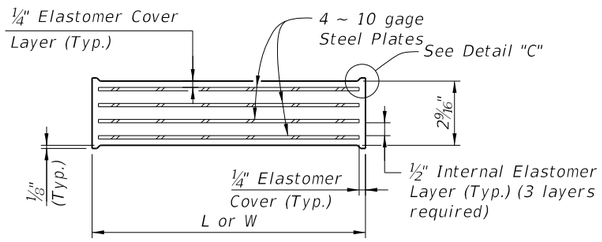

TYPICAL SECTION TYPE F & G PAD

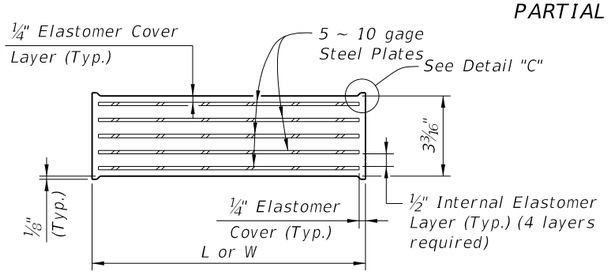

TYPICAL SECTION TYPE H PAD

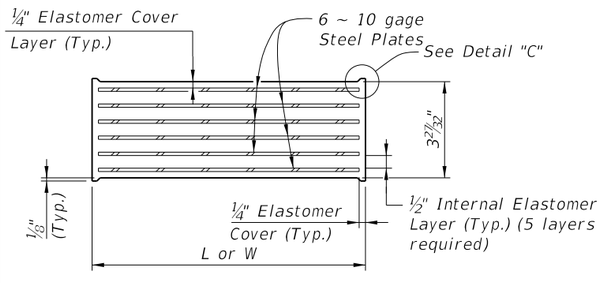

TYPICAL SECTION TYPE J & K PAD

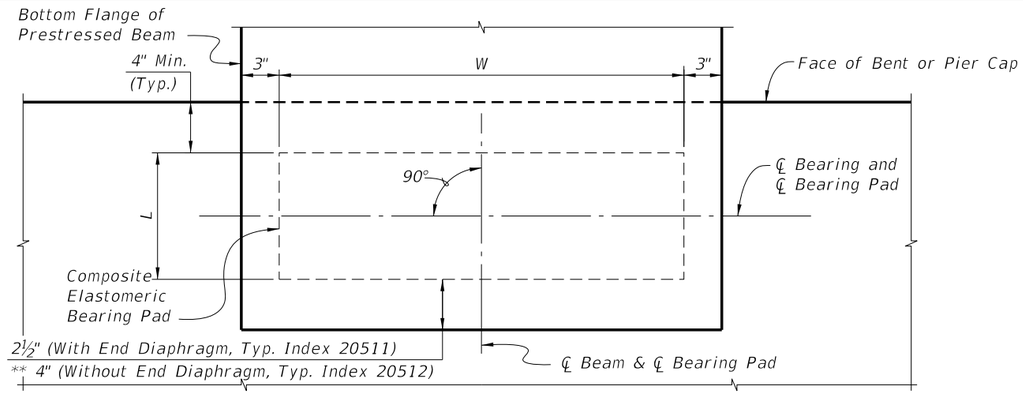

PARTIAL PLAN WITH OR WITHOUT FULL DEPTH END DIAPHRAGM
(Skew = 0°)

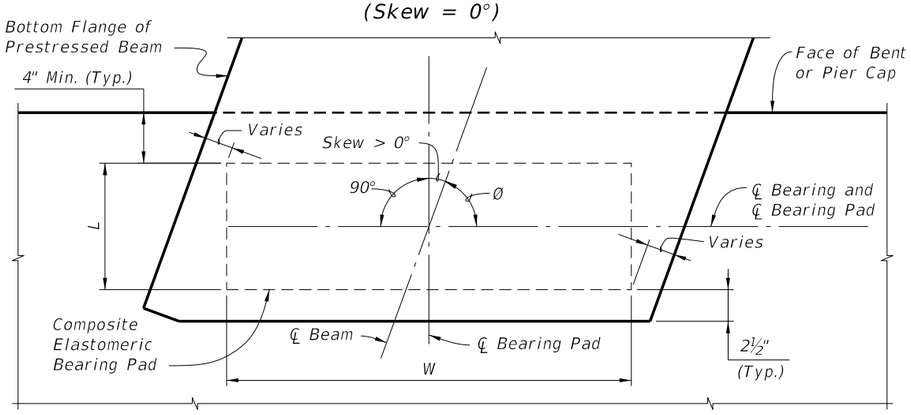

PARTIAL PLAN WITH SKEWED END BEAM AND FULL DEPTH END DIAPHRAGM (Use Index 20511)
(Skew > 0°)

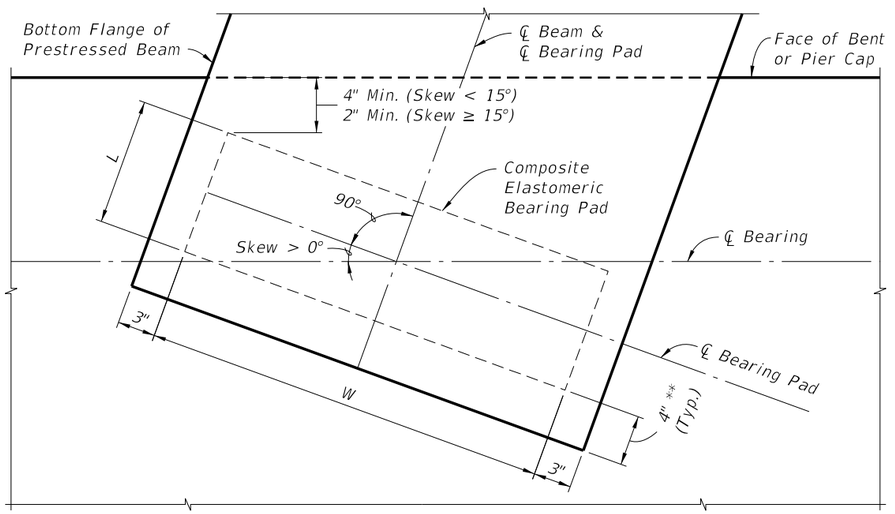

PARTIAL PLAN WITH SQUARED END BEAM (Use Index 20512)
(Skew > 0°)

PAD TYPE (See Note 1)	BEARING PAD DIMENSIONS L	BEARING PAD DIMENSIONS W	*BEVELED BEARING PLATE DIMENSIONS C	*BEVELED BEARING PLATE DIMENSIONS D
D (G=110psi)	8"	2'-8"	1'-0"	3'-0"
E (G=110psi)	10"	2'-8"	1'-0"	3'-0"
F (G=110psi)	10"	2'-8"	1'-0"	3'-0"
G (G=150psi)	10"	2'-8"	1'-0"	3'-0"
H (G=150psi)	10"	2'-8"	1'-0"	3'-0"
J (G=150psi)	10"	2'-8"	1'-0"	3'-0"
K (G=150psi)	1'-0"	2'-8"	1'-1½"	3'-0"

* Work this sheet with the appropriate type Bearing Plate Detail (See Bearing Plate Data Table) and BEARING PAD DATA TABLE in the Structures Plans. See TABLE OF BEAM VARIABLES and BEARING PLATE DATA TABLE in the Structures Plans for locations where beveled bearing plates are required.

** Offset to End of Beam is reduced to 2" for Type K Pad using Index No. 20512.

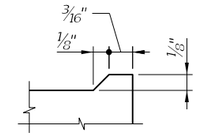

DETAIL "C"

BEARING PAD NOTES:

1. Neoprene in Type D, E & F bearing pads shall have a shear modulus (G) of 110 psi. Neoprene in Type G, H, J & K bearing pads shall have a shear modulus (G) of 150 psi.
2. Steel Plates in bearing pads shall conform to ASTM A1011 Grade 36, Type 1.
3. Unless otherwise shown in the Structures Plans:
   (a) For beam grades less than 0.5%, finish the Beam Seat level.
   (b) For beam grades between 0.5% and 2%, finish the Beam Seat parallel to the bottom of the beam in both transverse and longitudinal directions.
   (c) For beam grades greater than 2% finish the Beam Seat level and provide Beveled Bearing Plates.
4. See Bearing Pad Data Table in Structures Plans for quantities of Type D, E, F, G, H, J and/or K Bearing Pads.

C:\d\projects\standards\structures\2013book\20510-1of1.dgn
rd960rh
2:23:21 PM
6/28/2012

LAST REVISION	REVISION	DESCRIPTION:
01/01/12		

FDOT DESIGN STANDARDS
2013

COMPOSITE ELASTOMERIC BEARING PADS - PRESTRESSED FLORIDA-I BEAMS

INDEX NO. 20510

SHEET NO. 1

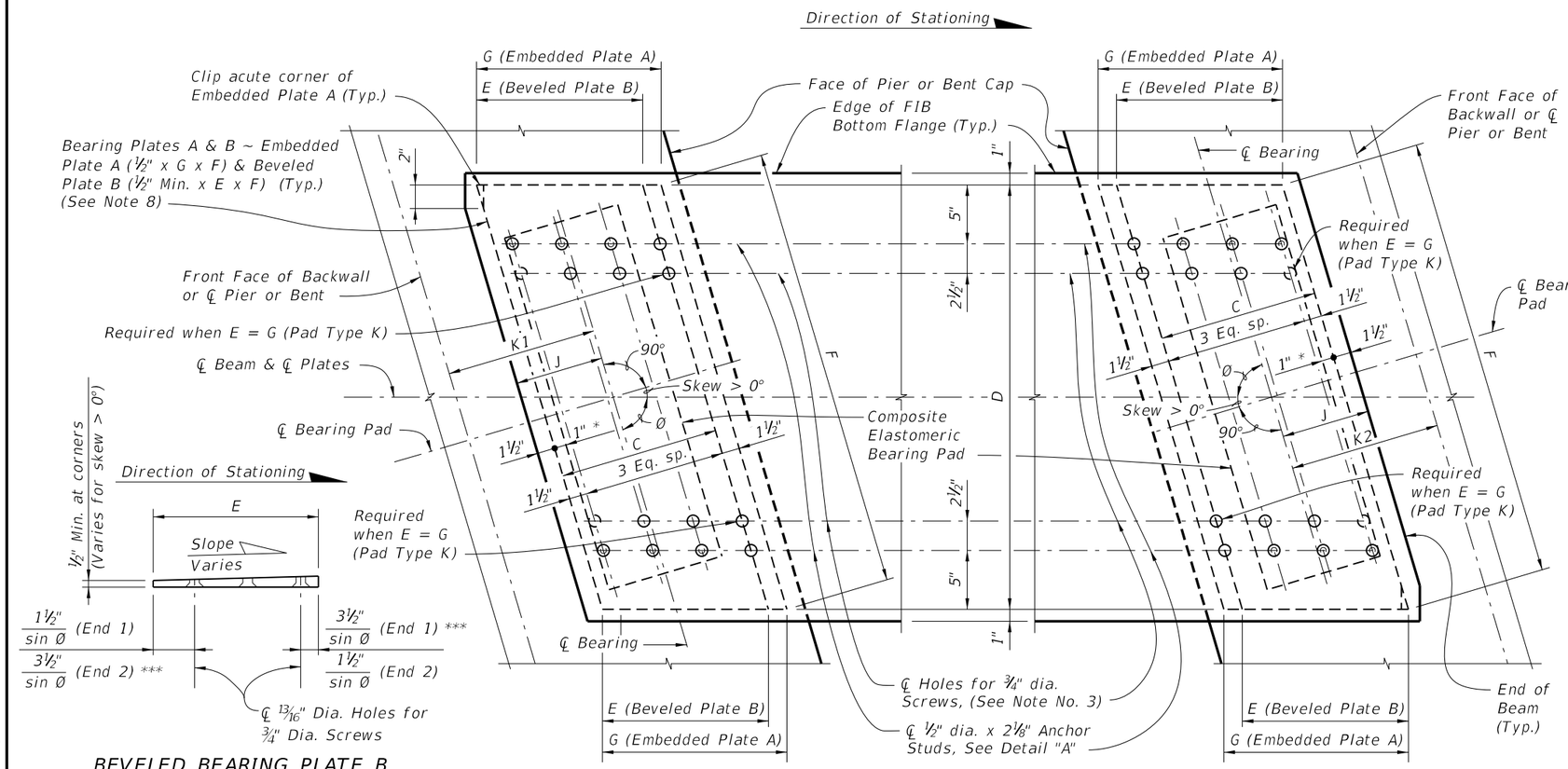

BEVELED BEARING PLATE B
(Along ℄ Beam)
(Positive Slope shown; Negative Slope similar)

PLAN
(0° < Skew ≤ 45° shown, Skew = 0° Similar)

* ½" when E = G (Pad Type K)

** $\frac{½"}{\sin Ø}$ when E = G (Pad Type K)

*** $\frac{1½"}{\sin Ø}$ when E = G (Pad Type K)

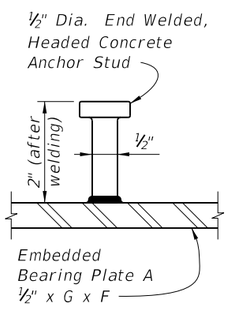

DETAIL "A"

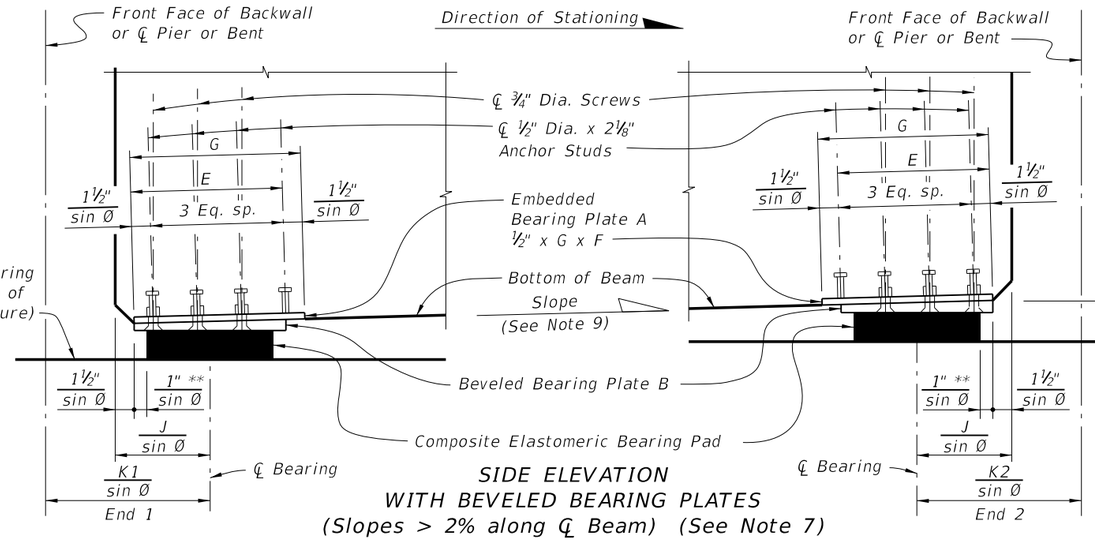

SIDE ELEVATION
WITH BEVELED BEARING PLATES
(Slopes > 2% along ℄ Beam) (See Note 7)

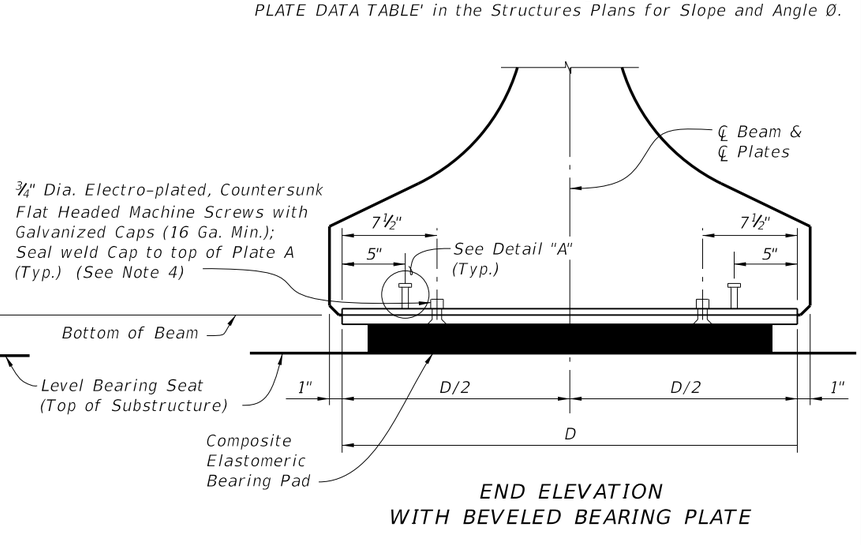

END ELEVATION
WITH BEVELED BEARING PLATE

NOTES:

1. Work this sheet with Index No. 20510 – Composite Elastomeric Bearing Pads, and 'BEARING PLATE DATA TABLE' in the Structures Plans.
2. Embedded Bearing Plates A are required for all Florida-I beams. Beveled Bearing Plates B with Embedded Bearing Plates A are required for beams as scheduled in the 'BEARING PLATE DATA TABLE' in the Structures Plans.
3. Bearing plate material shall conform to ASTM A36 or ASTM A709 (Grade 36 or 50). Headed Concrete Anchor Studs shall conform to Specification Section 502. Hot-dip galvanize Bearing Plates A & B after fabrication except that Galvanized Caps may be welded in place after hot-dip galvanizing. Drill Bearing Plates A and B as an assembled unit, thread Bearing Plate A only. Holes are not required in Plate A when Plate B is not required. Drill and thread holes perpendicular to the bottom of Plate B and prior to plates being galvanized (ASTM A 123).
4. Provide Electroplated, Flat Countersunk Head Cap Screws in accordance with ASTM F 835. Electroplating shall be ASTM B633, SC 2, Type 1. Provide screws long enough to maintain a ¾" minimum embedment into Embedded Bearing Plate A and Galvanized Cap. Provide steel Galvanized Caps with ½" Min. to 1½" Max. height and nominal 1" inside diameter.
5. Include the cost of Bearing Plates in the pay item for Prestressed Beams.
6. For Pad Type and Dimensions C, D, E, F and G, see the 'BEARING PLATE DATA TABLE' in the Structures Plans. For Dimensions J, K1 and K2, see 'TABLE OF BEAM VARIABLES' in the Structures Plans.
7. All details and dimensions shown are along ℄ Beam, except for dimensions to ¾" Dia. Screws and ½" Dia. x 2⅛" Anchor Studs, which are along ℄ Screws or ℄ Anchor Studs. Positive Slope shown, Negative Slope similar.
8. When Skew = 0°, D = F and E = C; therefore, dimensions for Embedded Bearing Plate A are ½" x G x D and for Beveled Plate B are ½" Min. x C x D.
9. Slope is determined along ℄ Beam at ℄ Bearing. See 'BEARING PLATE DATA TABLE' in the Structures Plans for Slope and Angle Ø.

C:\d\projects\standards\structures\2013book\20511-1of2.dgn
rd960rh
2:23:24 PM
6/28/2012

LAST REVISION	REVISION	DESCRIPTION:			INDEX NO.	SHEET NO.
01/01/12			FDOT DESIGN STANDARDS 2013	BEARING PLATES (TYPE 1) - PRESTRESSED FLORIDA-I BEAMS	20511	1

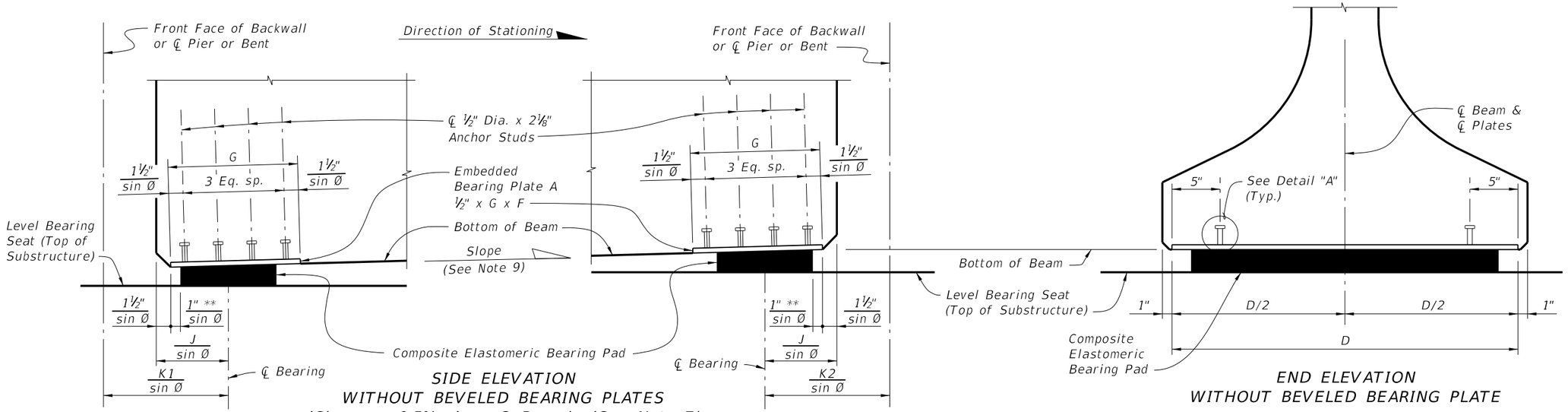

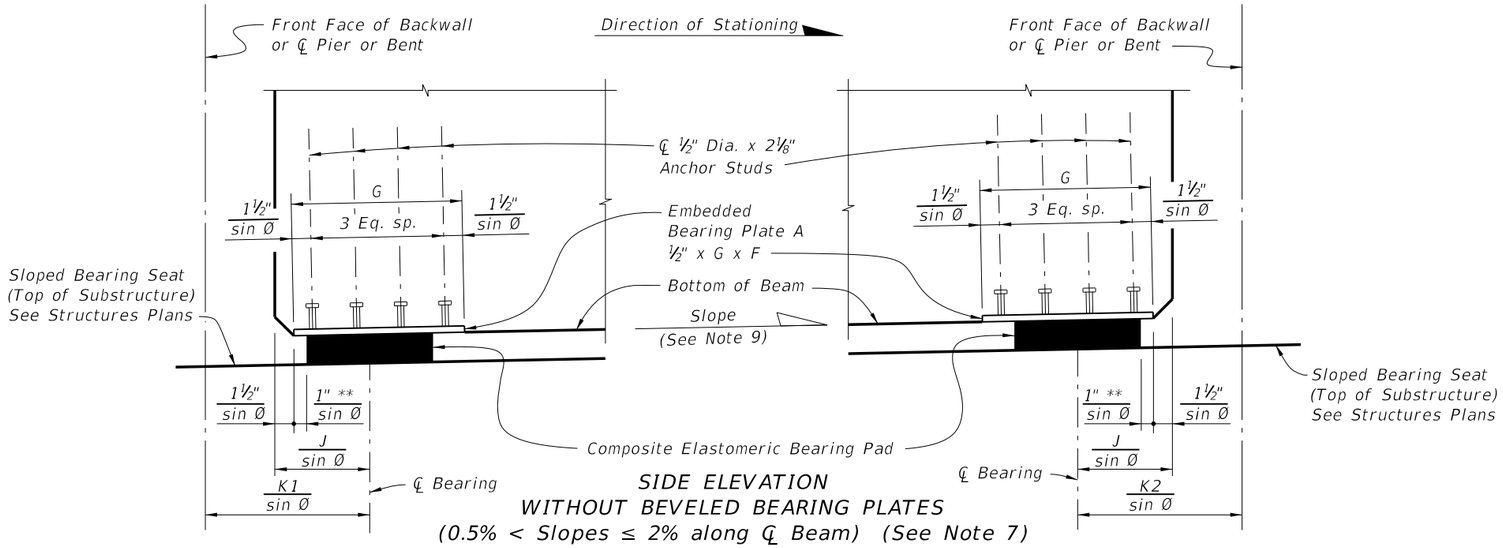

** ½" / sin Ø for Pad Type K

6/28/2012 2:23:26 PM rd960rh C:\d\projects\standards\structures\2013book\20511-2of2.dgn

LAST REVISION	REVISION	DESCRIPTION:		FDOT DESIGN STANDARDS 2013	BEARING PLATES (TYPE 1) - PRESTRESSED FLORIDA-I BEAMS	INDEX NO.	SHEET NO.
01/01/12						20511	2

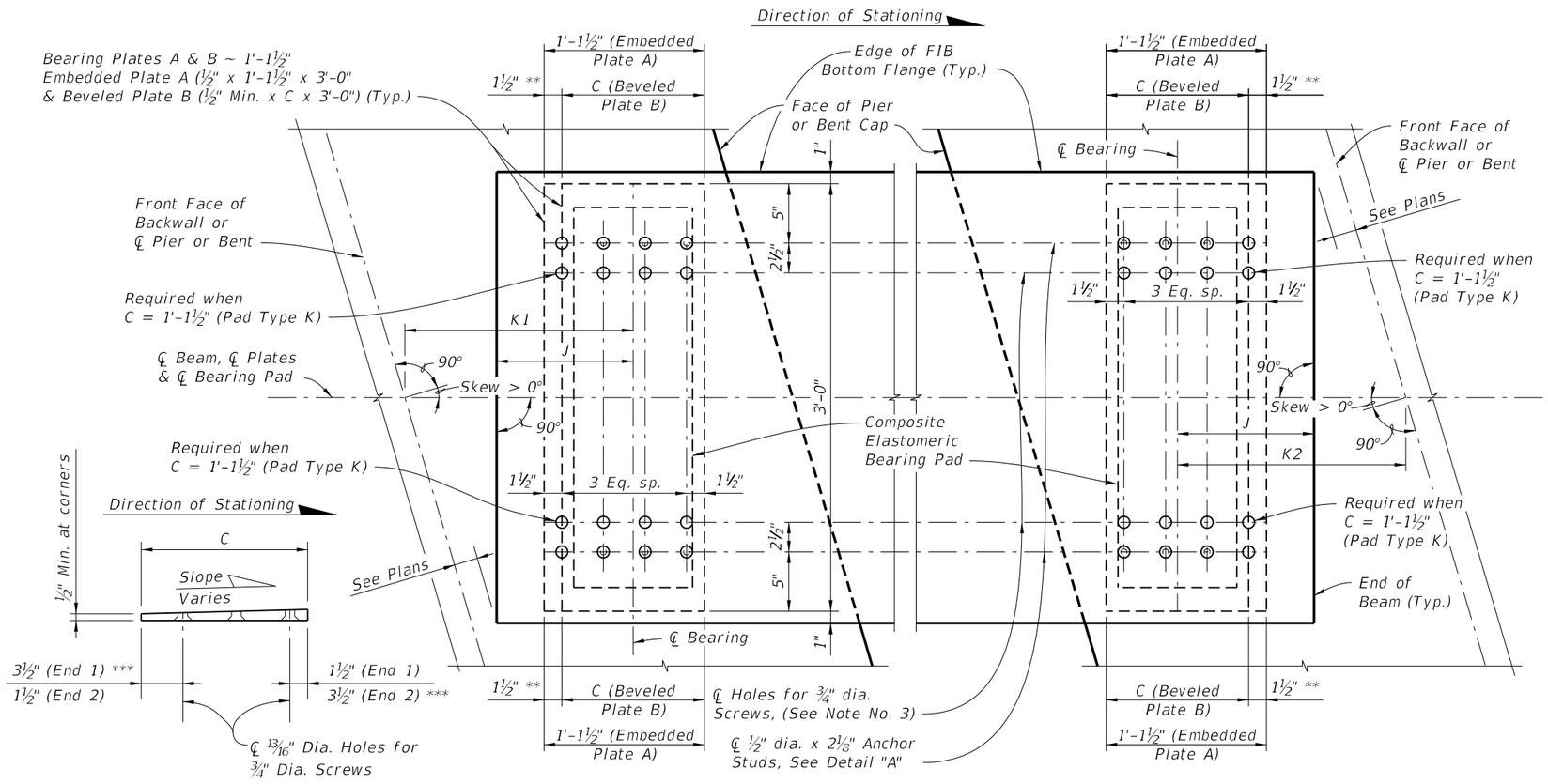

BEVELED BEARING PLATE B
(Along ℄ Beam)
(Positive Slope shown; Negative Slope similar)

* ½" when C = 1'-1½" (Pad Type K)
** 0" when C = 1'-1½" (Pad Type K)
*** 1½" when C = 1'-1½" (Pad Type K)

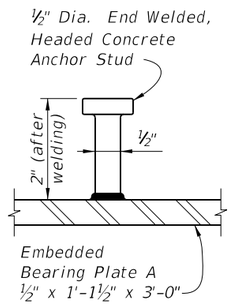

DETAIL "A"

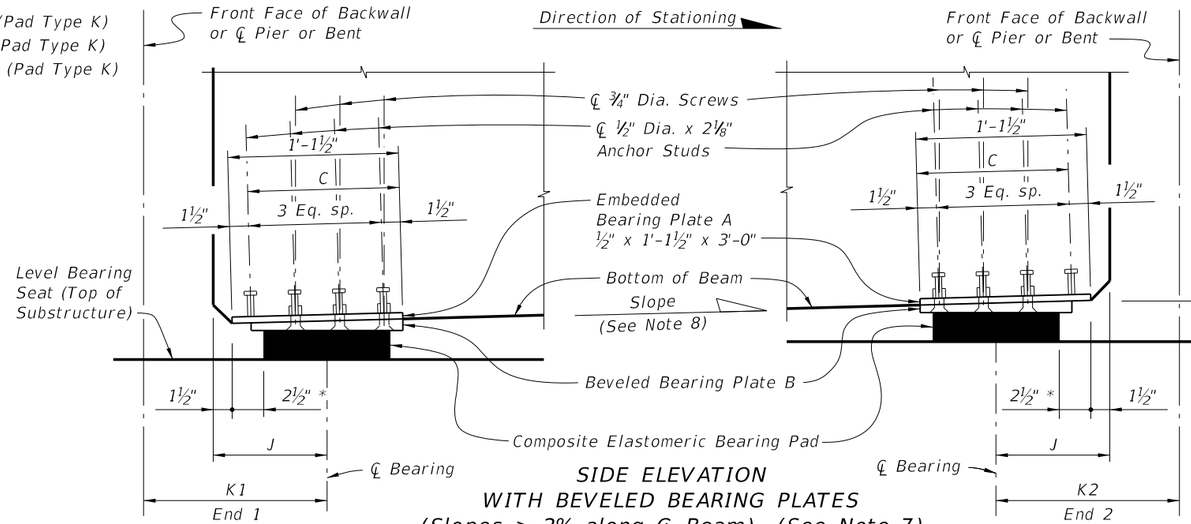

SIDE ELEVATION
WITH BEVELED BEARING PLATES
(Slopes > 2% along ℄ Beam) (See Note 7)

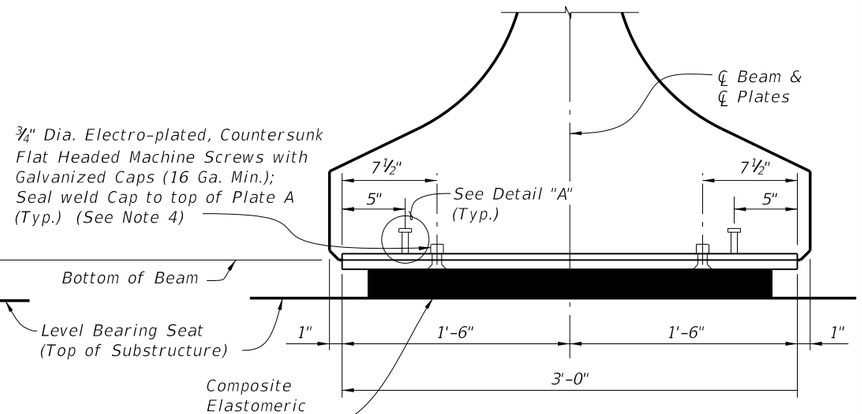

END ELEVATION
WITH BEVELED BEARING PLATE

NOTES:

1. Work this sheet with Index No. 20510 – Composite Elastomeric Bearing Pads, and 'BEARING PLATE DATA TABLE' in the Structures Plans.
2. Embedded Bearing Plates A are required for all Florida-I beams. Beveled Bearing Plates B with Embedded Bearing Plates A are required for beams as scheduled in the 'BEARING PLATE DATA TABLE' in the Structures Plans.
3. Bearing plate material shall conform to ASTM A36 or ASTM A709 (Grade 36 or 50). Headed Concrete Anchor Studs shall conform to Specification Section 502. Hot-dip galvanize Bearing Plates A & B after fabrication except that Galvanized Caps may be welded in place after hot-dip galvanizing. Drill Bearing Plates A and B as an assembled unit, thread Bearing Plate A only. Holes are not required in Plate A when Plate B is not required. Drill and thread holes perpendicular to the bottom of Plate B and prior to plates being galvanized (ASTM A 123).
4. Provide Electroplated, Flat Countersunk Head Cap Screws in accordance with ASTM F 835. Electroplating shall be ASTM B633, SC 2, Type 1. Provide screws long enough to maintain a ¾" minimum embedment into Embedded Bearing Plate A and Galvanized Cap. Provide steel Galvanized Caps with ½" Min. to 1½" Max. height and nominal 1" inside diameter.
5. Include the cost of Bearing Plates in the pay item for Prestressed Beams.
6. For Pad Type and Dimension C, see the 'BEARING PLATE DATA TABLE' in the Structures Plans. For Dimensions J, K1 and K2, see 'TABLE OF BEAM VARIABLES' in the Structures Plans.
7. All details and dimensions shown are along ℄ Beam. Positive Slope shown, Negative Slope similar.
8. Slope is determined along ℄ Beam at ℄ Bearing. See 'BEARING PLATE DATA TABLE' in the Structures Plans for Slope.

C:\d\projects\standards\structures\2013book\20512-1of2.dgn rd960rh 2:23:29 PM 6/28/2012

LAST REVISION	REVISION	DESCRIPTION:				
01/01/12			FDOT DESIGN STANDARDS 2013	BEARING PLATES (TYPE 2) - PRESTRESSED FLORIDA-I BEAMS	INDEX NO. 20512	SHEET NO. 1

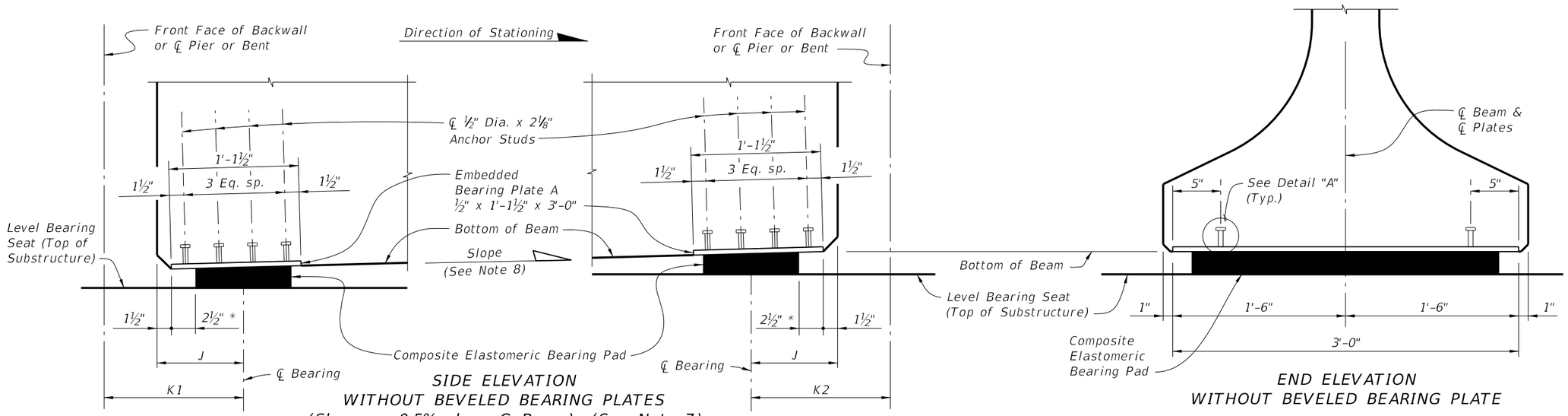

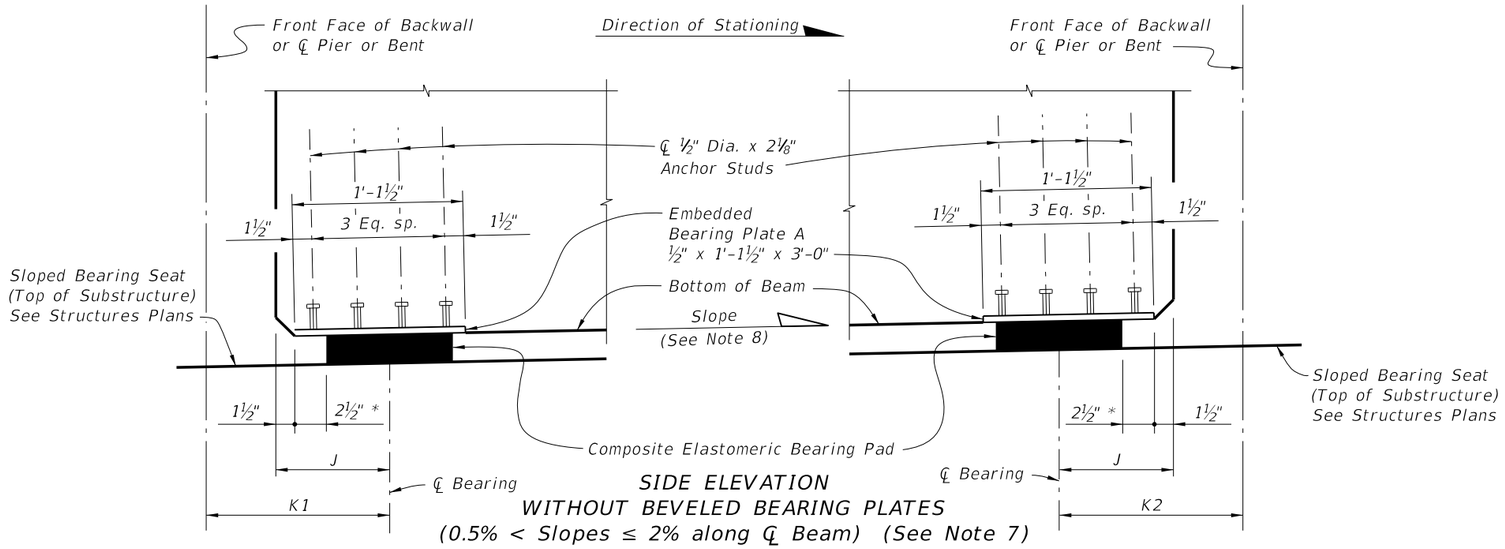

* ½" for Pad Type K

C:\d\projects\standards\structures\2013book\20512-2of2.dgn
rd960rh
2:23:31 PM
6/28/2012

LAST REVISION	REVISION	DESCRIPTION:		FDOT DESIGN STANDARDS 2013	BEARING PLATES (TYPE 2) - PRESTRESSED FLORIDA-I BEAMS	INDEX NO.	SHEET NO.
01/01/12						20512	2

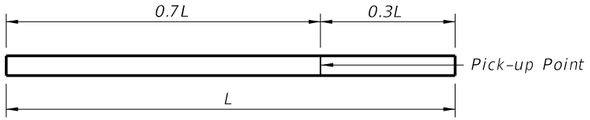

1-POINT PICK-UP

2-POINT PICK-UP

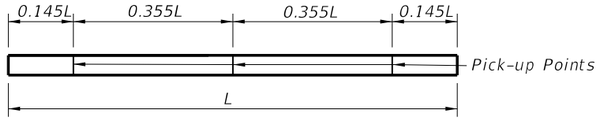

3-POINT PICK-UP

PILE PICK-UP DETAILS

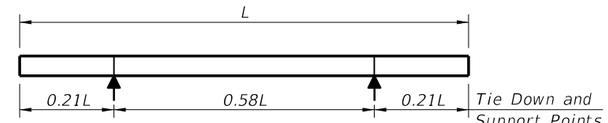

2-POINT SUPPORT

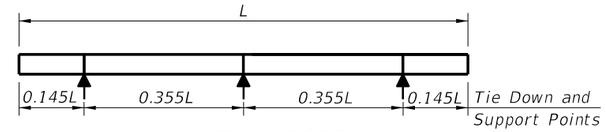

3-POINT SUPPORT

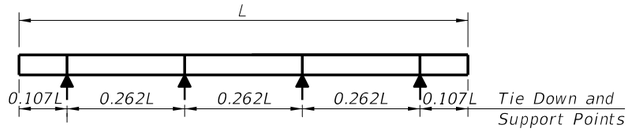

4-POINT SUPPORT

STORAGE AND TRANSPORTATION SUPPORT DETAILS

TABLE OF MAXIMUM PILE PICK-UP AND SUPPORT LENGTHS								
	D = Square Pile Size (inches)						Required Storage and Transportation Detail	Pick-Up Detail
	12	14	18	20	24	30		
Maximum Pile Length (Feet)	48	52	59	62	68	87	2, 3, or 4 point	1 Point
	69	75	85	89	98	124	2, 3, or 4 point	2 Point
	99	107	121	128	140	178	3 or 4 point	3 Point

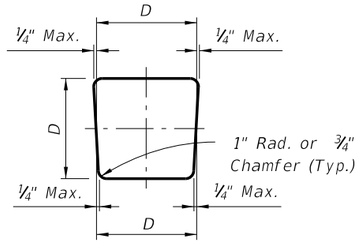

TYPICAL PILE SHAPE FOR MOLD FORMS

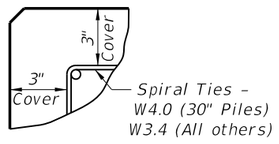

DETAIL SHOWING TYPICAL COVER

PRESTRESSED CONCRETE PILE NOTES:

DESIGN SPECIFICATIONS:

Florida Department of Transportation (FDOT) "Structures Design Guidelines", current edition.

American Association of State Highway and Transportation Officials (AASHTO) "LRFD Bridge Design Specifications", current edition.

SPIRAL TIES:

Each wrap of spirals shall be tied to at least two corner strands. One turn required for spiral splices.

CONCRETE CLASS:

Concrete for all piles shall be Class V (Special) except designated High Moment Capacity Piles (Index 20631) shall be Class VI.

Concrete for the High Capacity Collar Splice shall be Class V (Special).

See "GENERAL NOTES" in Structures Plans for any specific locations where the use of Silica Fume is required.

CONCRETE STRENGTH:

The pile cylinder strength shall be 6,000 psi minimum at 28 days and 4,000 psi minimum at time of transfer of the Prestressing Force. The cylinder strength for designated High Moment Capacity Piles (Index 20631) shall be 8,500 psi minimum at 28 days and 6,500 psi minimum at time of transfer of the Prestressing Force.

SPLICE BONDING MATERIAL:

The material to fill dowel holes and form the joint between pile sections shall be a Type B Epoxy Compound in accordance with Specification Section 926 and shall be contained on the Qualified Products List (QPL). Use Epoxy Bonding Compound or Epoxy Mortar as recommended by the Manufacturer. For Epoxy Mortar only use sand or other filler material supplied by the manufacturer and in the proportions recommended.

PICK-UP POINTS:

Piles shall be marked at the pick-up points to indicate proper points for attaching handling lines.

REINFORCING STEEL:

All reinforcing steel shall be Grade 60, except that spiral ties shall be manufactured from cold-drawn steel wire meeting the requirements of ASTM A82.

PRESTRESSING STEEL:

Prestressing steel shall be seven-wire strand, Grade 270, Low-Relaxation Strand (LRS).

CORROSION PROTECTION OF EXPOSED STRANDS:

For all piles having ends exposed to the environment and not embedded under final conditions, protect the strands as follows: Prior to shipment, cut strands at appropiate end(s) back to a minmum depth of 1 inch below the concrete surface and patch with a Type F epoxy compound meeting the requirements of Specification Section 926.

6/28/2012 2:23:34 PM rd960rh C:\d\projects\standards\structures\2013book\20600-1of1.dgn

LAST REVISION	REVISION	DESCRIPTION:		FDOT DESIGN STANDARDS 2013	NOTES AND DETAILS FOR SQUARE PRESTRESSED CONCRETE PILES	INDEX NO.	SHEET NO.
01/01/12						20600	1

NOTES:

1. For Sections D-D, E-E, & F-F see Index Nos. 20612, 20614, 20618, 20620, 20624 or 20630 for applicable concrete pile size and Pile Splice Reinforcement Details.

2. Prestressing strands, spiral ties and/or reinforcement are not shown for clarity.

3. In cases where pile splices are desired due to length limitations in shipping and/or handling, the "Drivable Preplanned Prestressed Precast Splice Detail" shall be used. Mechanical Pile Splices contained on the Qualified Products List (QPL) may also be used.

4. When preformed dowel holes are utilized, the 1" spiral tie pitch shall be continued to 4'-0" below the head of the pile, See Index Nos. 20618, 20620 & 20624. Preformed holes shall utilize either removable preforming material or stay-in-place corrugated galvanized steel ducts. Stay-in-place ducts shall be fabricated from galvanized sheet steel meeting the requirements of ASTM A653, Coating Designation G90, 26 gauge. Ducts shall be 2" diameter with a minimum corrugation (rib) height of 0.12 in. Ducts shall be fabricated with either welded or interlocked seams. Galvanizing of welded seams will not be required.

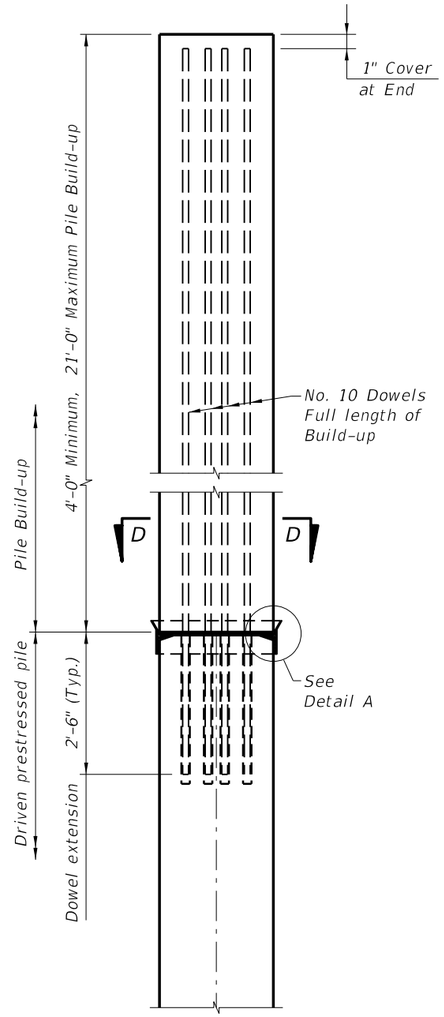

NONDRIVABLE UNFORESEEN
REINFORCED PRECAST
PILE BUILD-UP DETAIL

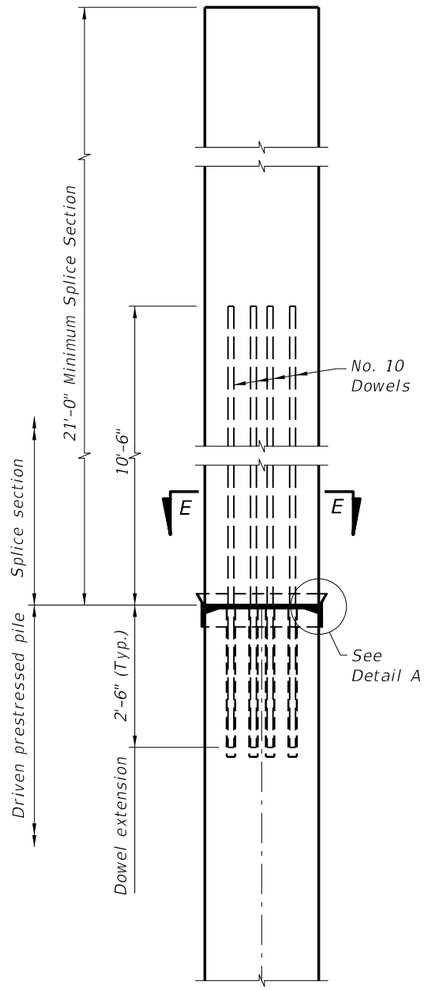

DRIVABLE UNFORESEEN
PRESTRESSED PRECAST
PILE SPLICE DETAIL

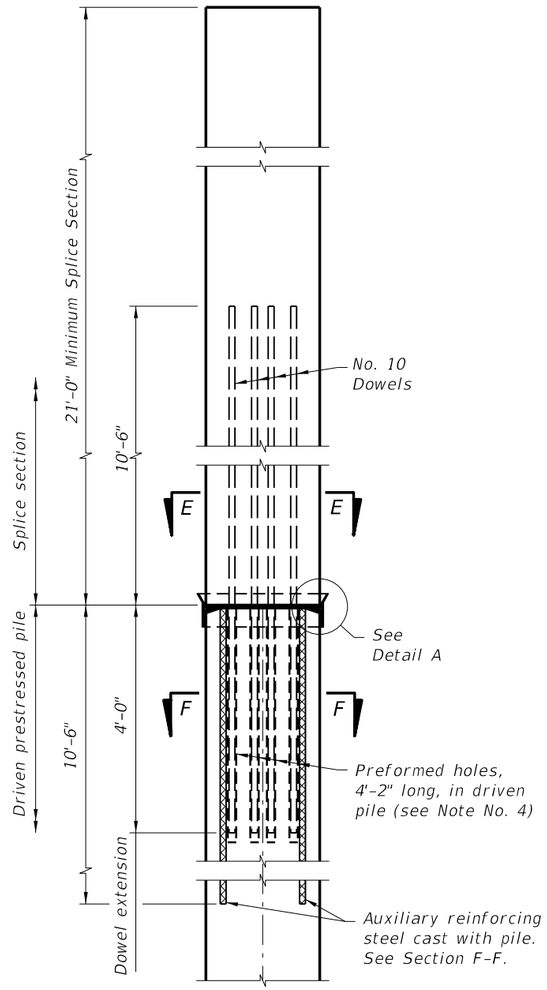

DRIVABLE PREPLANNED
PRESTRESSED PRECAST
PILE SPLICE DETAIL

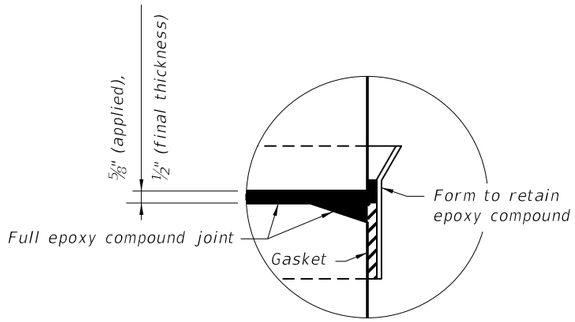

DETAIL A

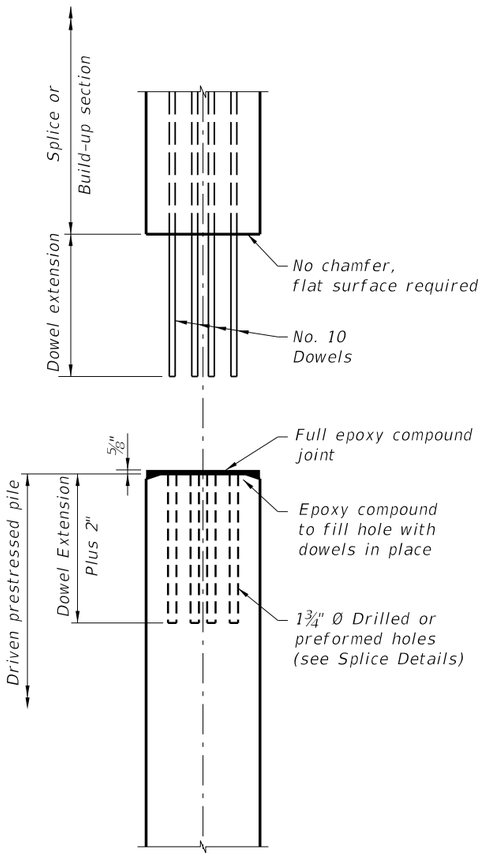

TYPICAL SPLICE
BEFORE BONDING

LAST REVISION	REVISION	DESCRIPTION:			INDEX NO.	SHEET NO.
01/01/12			FDOT DESIGN STANDARDS 2013	SQUARE PRESTRESSED CONCRETE PILE SPLICES	20601	1

6/28/2012 2:23:36 PM rd960rh C:\d\projects\standards\structures\2013book\20601-1of1.dgn

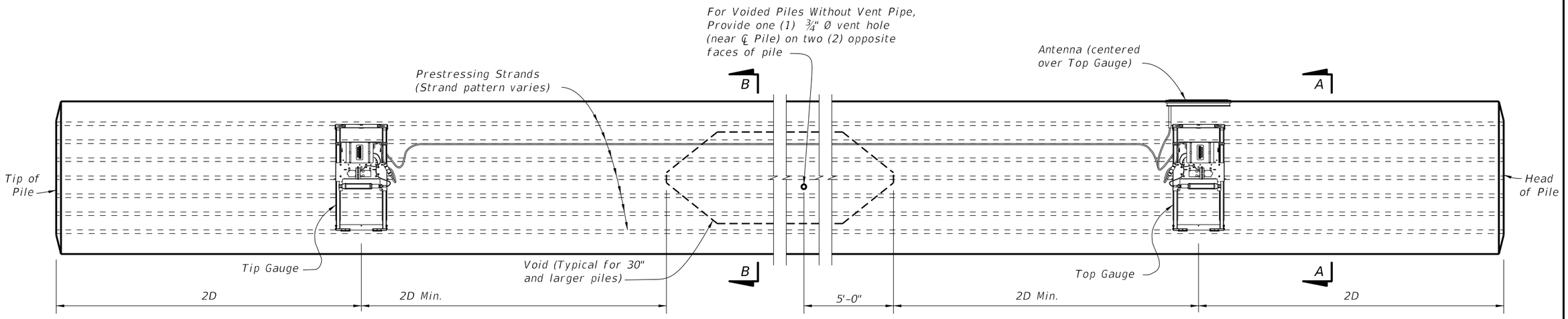

ELEVATION

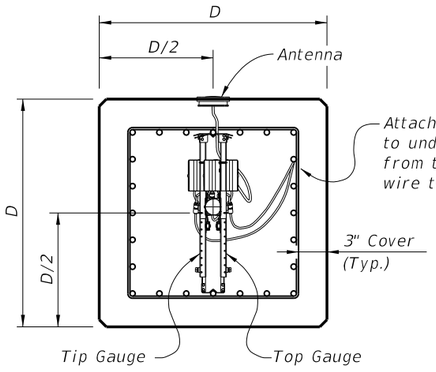

SECTION A-A
(Strand Pattern with odd number of strands per face)

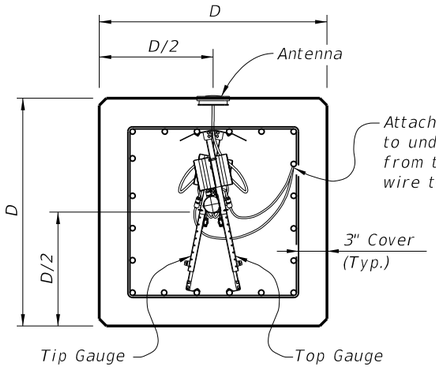

SECTION A-A
(Strand Pattern with even number of strands per face)

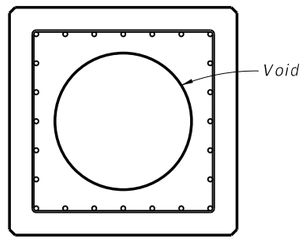

SECTION B-B
(Showing Voided Pile, Solid Pile Similar)

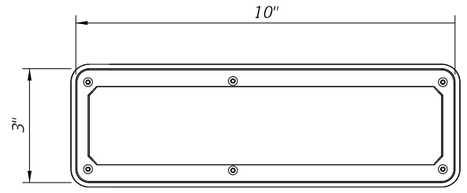

ANTENNA TOP VIEW

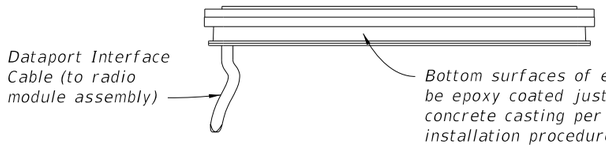

ANTENNA SIDE VIEW

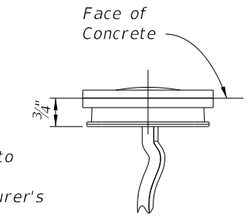

ANTENNA END VIEW

NOTE:
Provide EDC Instrumentation in square prestressed concrete piles (18" and larger) in accordance with Specification Section 455 for bridge foundations.

C:\d\projects\standards\structures\2013book\20602-1of1.dgn rd960rh 2:23:38 PM 6/28/2012

LAST REVISION	REVISION	DESCRIPTION:		FDOT DESIGN STANDARDS 2013	EDC INSTRUMENTATION FOR SQUARE PRESTRESSED CONCRETE PILES	INDEX NO.	SHEET NO.
07/01/12						20602	1

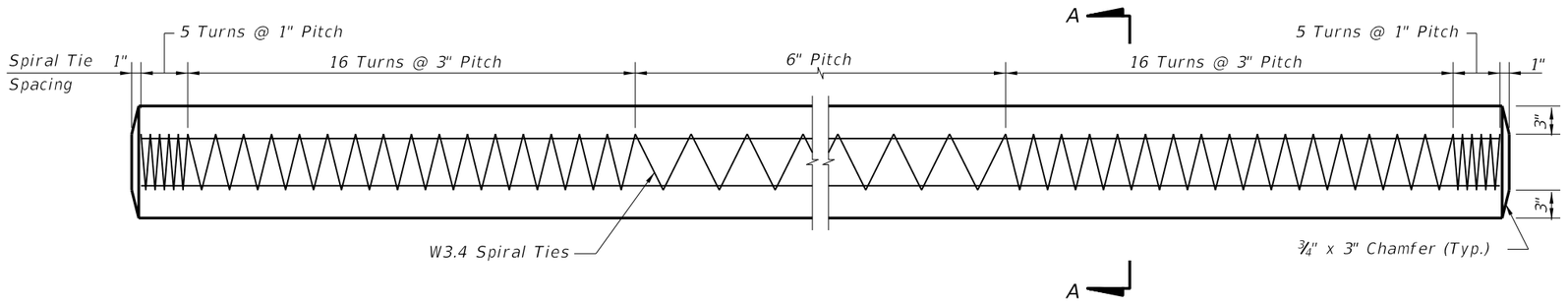

ELEVATION

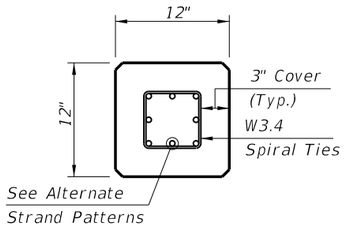

SECTION A-A

ALTERNATE STRAND PATTERNS

4 ~ 0.6" Ø, Grade 270 LRS, at 44 kips
8 ~ ½" Ø (Special), Grade 270 LRS, at 25 kips
8 ~ ½" Ø, Grade 270 LRS, at 24 kips
8 ~ 7/16" Ø, Grade 270 LRS, at 23 kips
12 ~ ⅜" Ø, Grade 270 LRS, at 16 kips

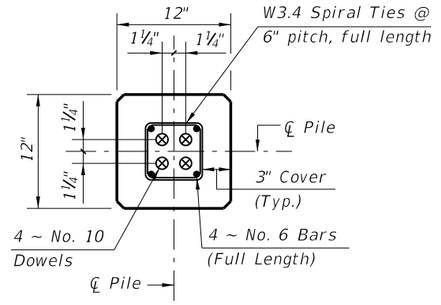

SECTION D-D
(See Nondrivable Unforeseen Reinforced Precast Pile Splice Detail)

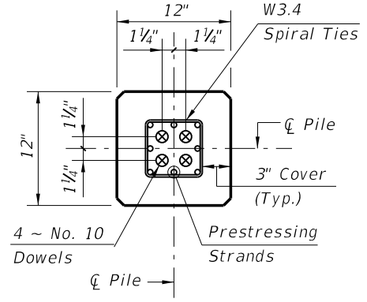

SECTION E-E
(See Drivable Unforeseen Prestressed Precast Pile Splice Detail)

PILE SPLICE REINFORCEMENT DETAILS

NOTES:
1. Work this Index with Index No. 20600 – Notes and Details for Square Prestressed Concrete Piles and Index No. 20601 – Square Prestressed Concrete Pile Splices.
2. Any of the given Alternate Strand Patterns may be utilized. The strands shall be located as follows:
   Place one strand at each corner and place the remaining strands equally spaced between the corner strands.
   The total strand pattern shall be concentric with the nominal concrete section of the pile.

6/28/2012 2:23:41 PM rd960rh C:\d\projects\standards\structures\2013book\20612-1of1.dgn

LAST REVISION	REVISION	DESCRIPTION:		FDOT DESIGN STANDARDS 2013	12" SQUARE PRESTRESSED CONCRETE PILE	INDEX NO.	SHEET NO.
01/01/12						20612	1

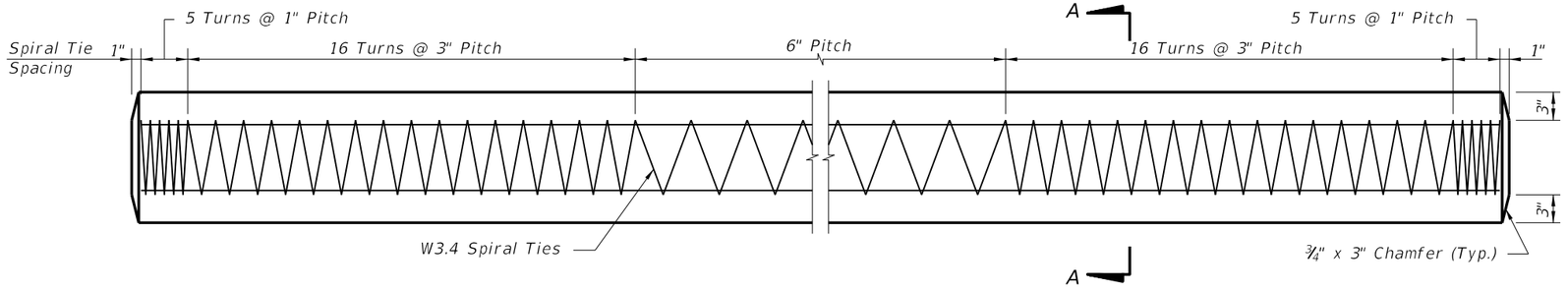

ELEVATION

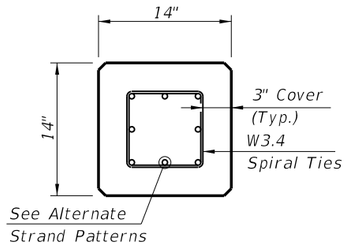

SECTION A-A

ALTERNATE STRAND PATTERNS

8 ~ 0.6" Ø, Grade 270 LRS, at 33 kips
8 ~ ½" Ø (Special), Grade 270 LRS, at 31 kips
8 ~ ½" Ø, Grade 270 LRS, at 31 kips
12 ~ 7/16" Ø, Grade 270 LRS, at 21 kips
16 ~ ⅜" Ø, Grade 270 LRS, at 16 kips

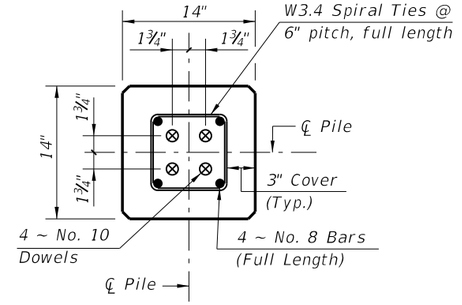

SECTION D-D
(See Nondrivable Unforeseen Reinforced Precast Splice Detail)

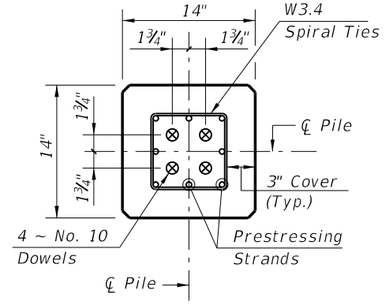

SECTION E-E
(See Drivable Unforeseen Prestressed Precast Splice Detail)

PILE SPLICE REINFORCEMENT DETAILS

NOTES:
1. Work this Index with Index No. 20600 – Notes and Details for Square Prestressed Concrete Piles and Index No. 20601 – Square Prestressed Concrete Pile Splices.
2. Any of the given Alternate Strand Patterns may be utilized. The strands shall be located as follows:
   Place one strand at each corner and place the remaining strands equally spaced between the corner strands.
   The total strand pattern shall be concentric with the nominal concrete section of the pile.

6/28/2012 2:23:45 PM rd960rh C:\d\projects\standards\structures\2013book\20614-1of1.dgn

LAST REVISION	REVISION	DESCRIPTION:		FDOT DESIGN STANDARDS 2013	14" SQUARE PRESTRESSED CONCRETE PILE	INDEX NO.	SHEET NO.
01/01/12						20614	1

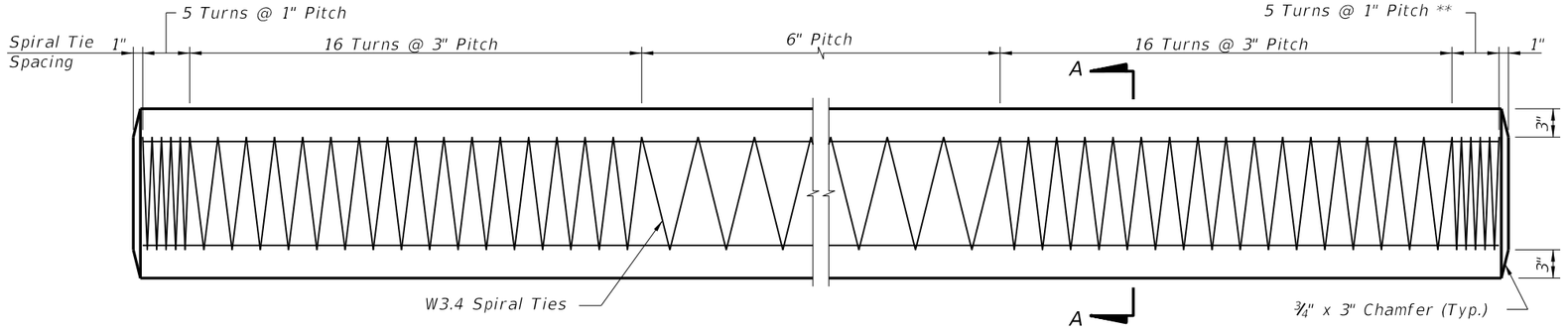

ELEVATION

** See Note No. 4 on Index No. 20601

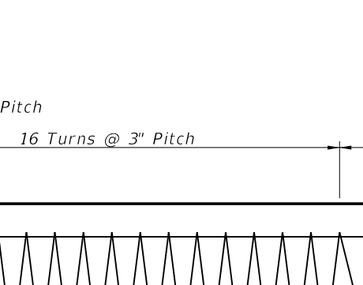

SECTION A-A

ALTERNATE STRAND PATTERNS

12 ~ 0.6" Ø, Grade 270 LRS, at 35 kips
12 ~ ½" Ø (Special), Grade 270 LRS, at 34 kips
16 ~ ½" Ø, Grade 270 LRS, at 26 kips
20 ~ 7/16" Ø, Grade 270 LRS, at 21 kips
24 ~ ⅜" Ø, Grade 270 LRS, at 17 kips

NOTES:
1. Work this Index with Index No. 20600 – Notes and Details for Square Prestressed Concrete Piles and Index No. 20601 – Square Prestressed Concrete Pile Splices.
2. Any of the given Alternate Strand Patterns may be utilized. The strands shall be located as follows:
   Place one strand at each corner and place the remaining strands equally spaced between the corner strands.
   The total strand pattern shall be concentric with the nominal concrete section of the pile.

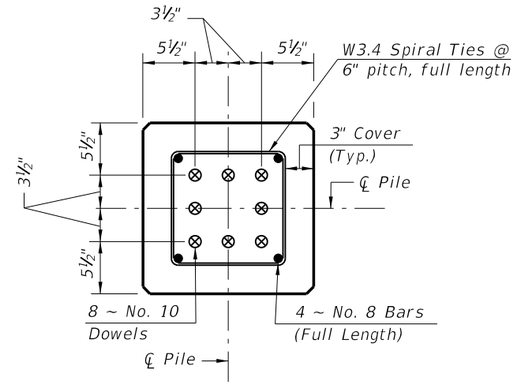

SECTION D-D
(See Nondrivable Unforeseen Reinforced Precast Splice Detail)

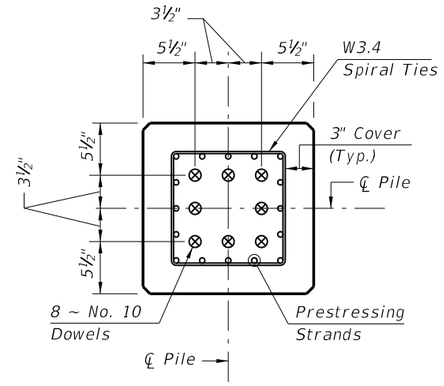

SECTION E-E
(See Drivable Prestressed Precast Splice Detail)

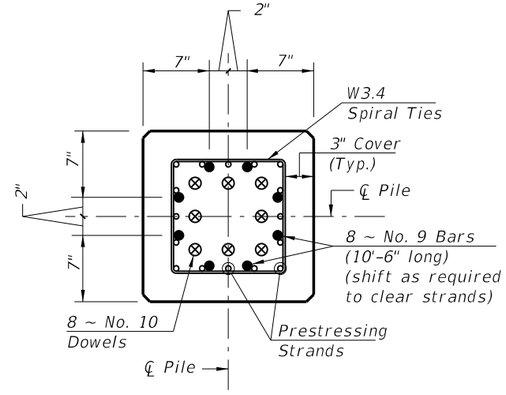

SECTION F-F
(See Drivable Preplanned Splice Detail)

PILE SPLICE REINFORCEMENT DETAILS

6/28/2012 2:23:48 PM rd960rh C:\d\projects\standards\structures\2013book\20618-1of1.dgn

LAST REVISION	REVISION	DESCRIPTION:				
01/01/12			FDOT DESIGN STANDARDS 2013	18" SQUARE PRESTRESSED CONCRETE PILE	INDEX NO. 20618	SHEET NO. 1

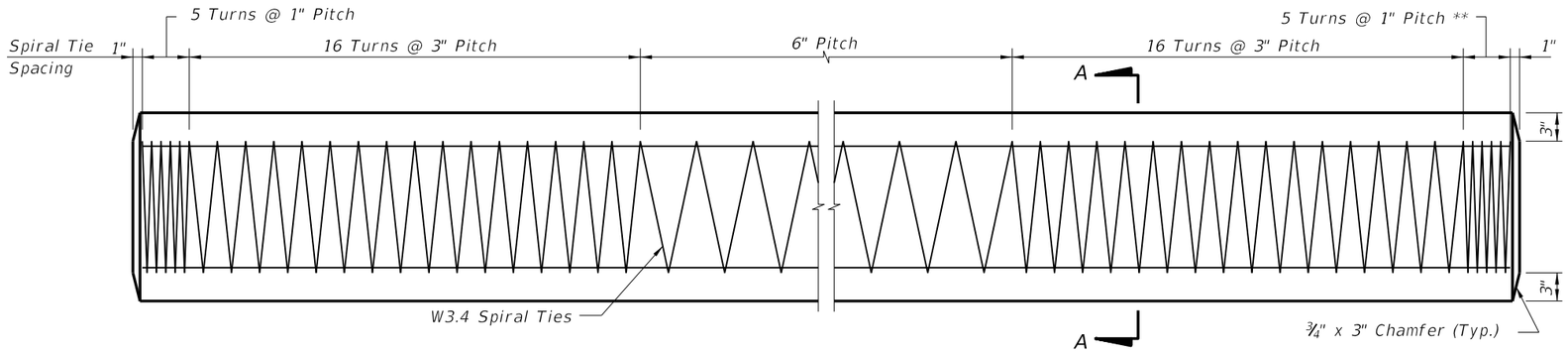

ELEVATION

** See Note No. 4 on Index No. 20601

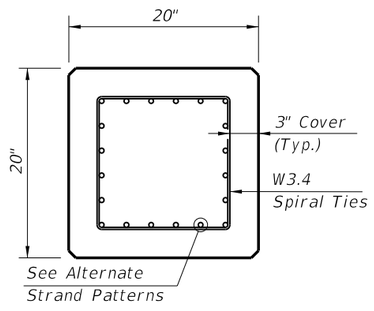

SECTION A-A

ALTERNATE STRAND PATTERNS

12 ~ 0.6" Ø, Grade 270 LRS, at 42 kips
16 ~ ½" Ø (Special), Grade 270 LRS, at 31 kips
16 ~ ½" Ø, Grade 270 LRS, at 31 kips
24 ~ 7/16" Ø, Grade 270 LRS, at 21 kips

NOTES:
1. Work this Index with Index No. 20600 – Notes and Details for Square Prestressed Concrete Piles and Index No. 20601 – Square Prestressed Concrete Pile Splices.
2. Any of the given Alternate Strand Patterns may be utilized. The strands shall be located as follows:
   Place one strand at each corner and place the remaining strands equally spaced between the corner strands.
   The total strand pattern shall be concentric with the nominal concrete section of the pile.

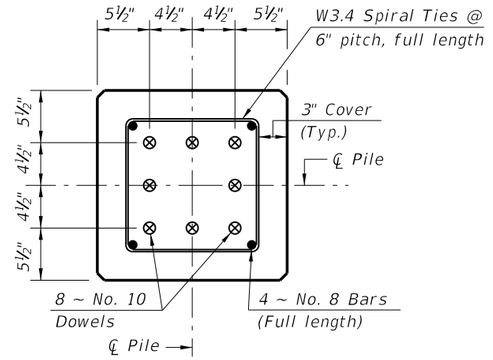

SECTION D-D
(See Nondrivable Unforeseen Reinforced Precast Pile Splice Detail)

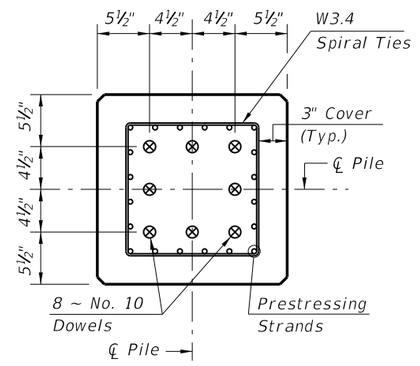

SECTION E-E
(See Drivable Prestressed Precast Pile Splice Detail)

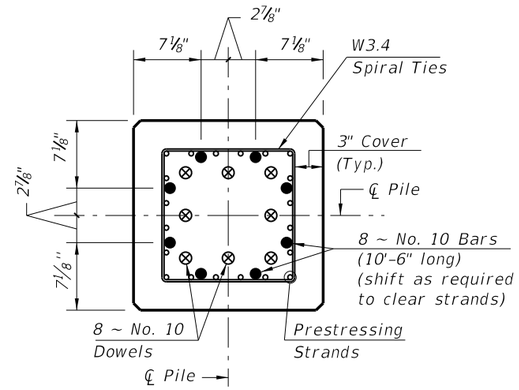

SECTION F-F
(See Drivable Preplanned Pile Splice Detail)

PILE SPLICE REINFORCEMENT DETAILS

C:\d\projects\standards\structures\2013book\20620-1of1.dgn
rd960rh
2:23:50 PM
6/28/2012

LAST REVISION	REVISION	DESCRIPTION:				
01/01/12			FDOT DESIGN STANDARDS 2013	20" SQUARE PRESTRESSED CONCRETE PILE	INDEX NO. 20620	SHEET NO. 1

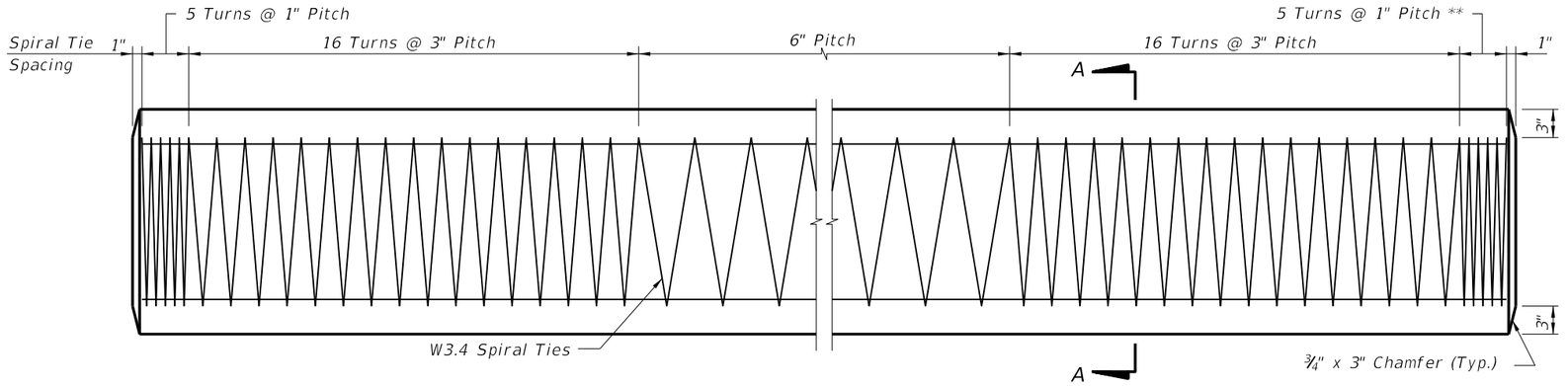

ELEVATION

** See Note No. 4 on Index No. 20601

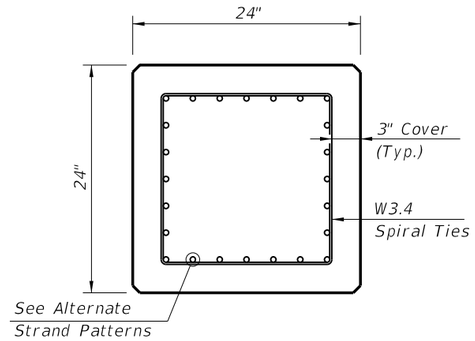

SECTION A-A

ALTERNATE STRAND PATTERNS

16 ~ 0.6" Ø, Grade 270 LRS, at 44 kips
20 ~ ½" Ø (Special), Grade 270 LRS, at 34 kips
24 ~ ½" Ø, Grade 270 LRS, at 31 kips

NOTES:
1. Work this Index with Index No. 20600 – Notes and Details for Square Prestressed Concrete Piles and Index No. 20601 – Square Prestressed Concrete Pile Splices.
2. Any of the given Alternate Strand Patterns may be utilized. The strands shall be located as follows:
   Place one strand at each corner and place the remaining strands equally spaced between the corner strands.
   The total strand pattern shall be concentric with the nominal concrete section of the pile.

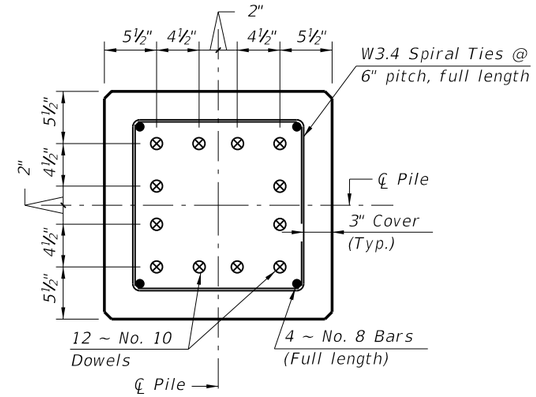

SECTION D-D
(See Nondrivable Unforeseen Reinforced Precast Pile Splice Detail)

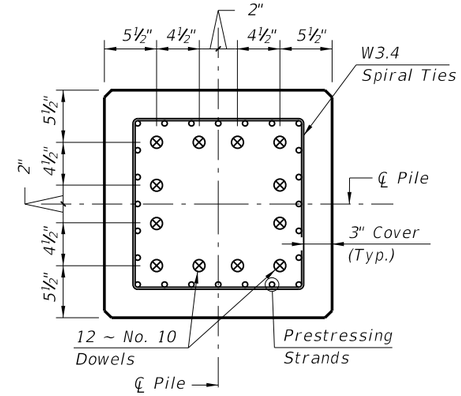

SECTION E-E
(See Drivable Prestressed Precast Pile Splice Detail)

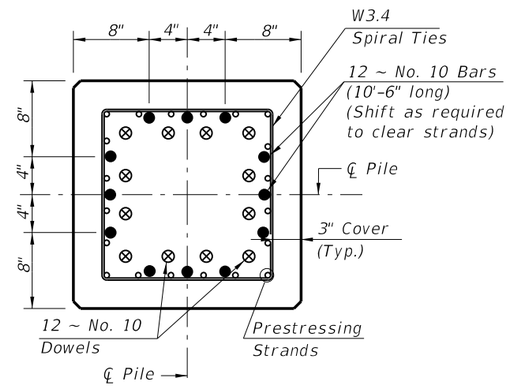

SECTION F-F
(See Drivable Preplanned Pile Splice Detail)

6/28/2012 2:23:53 PM rd960rh C:\d\projects\standards\structures\2013book\20624-1of1.dgn

LAST REVISION	REVISION	DESCRIPTION:			INDEX NO.	SHEET NO.
01/01/12			FDOT DESIGN STANDARDS 2013	24" SQUARE PRESTRESSED CONCRETE PILE	20624	1

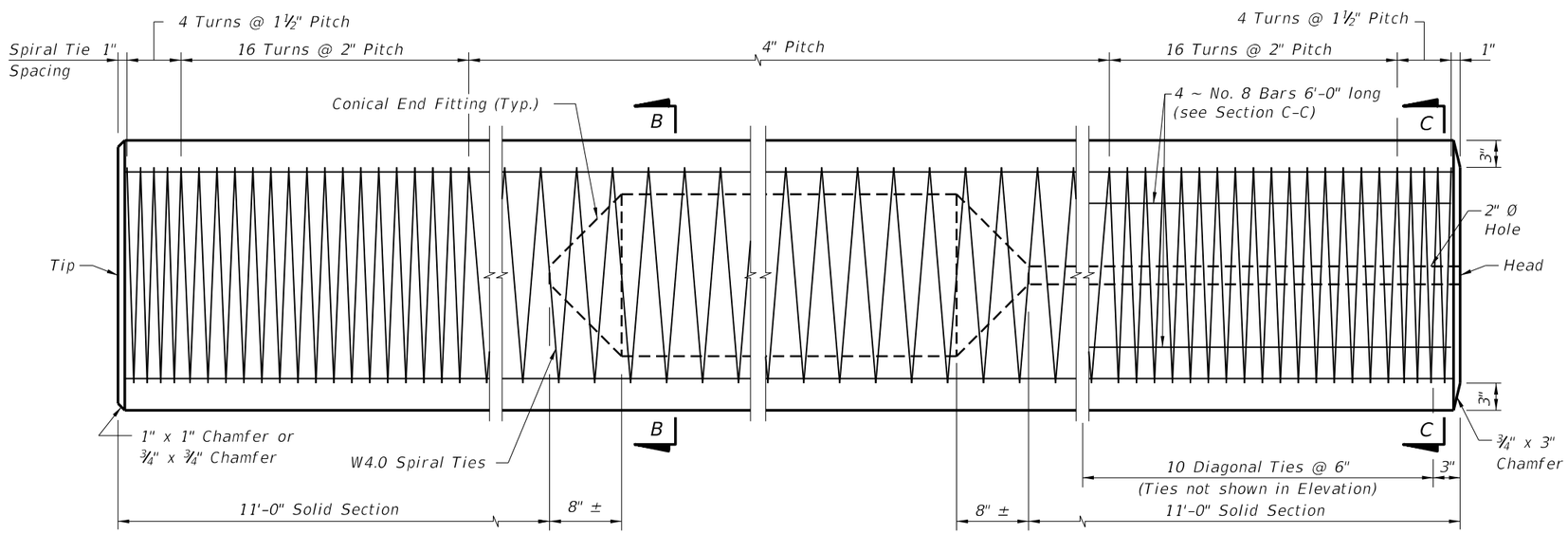

ELEVATION

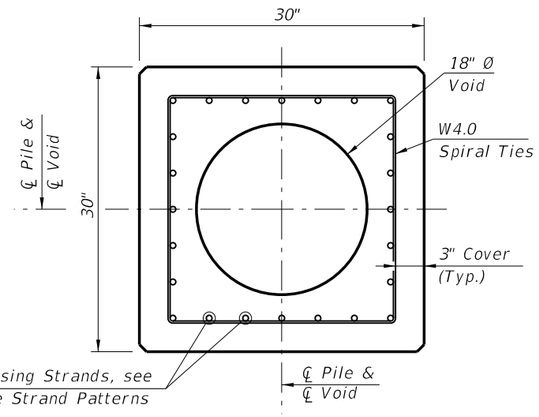

SECTION B-B
(See Pile Splice Reinforcement Details)

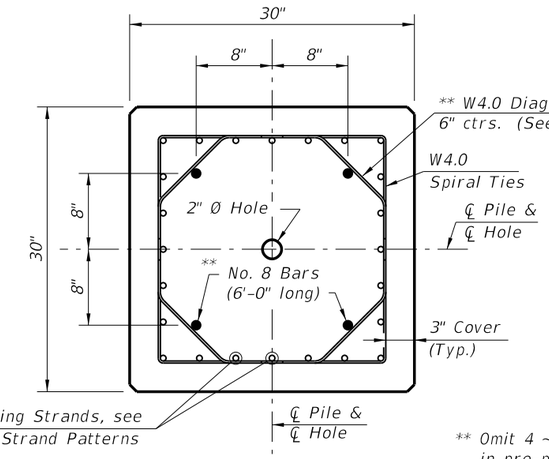

SECTION C-C
(See Pile Splice Reinforcement Details)

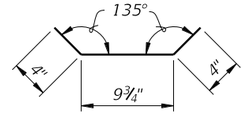

W4.0 DIAGONAL TIE DETAIL

** Omit 4 ~ No. 8 Bars and Diagonal Ties in pre-planned mechanical splice.

ALTERNATE STRAND PATTERNS

20 ~ 0.6" Ø, Grade 270 LRS, at 41 kips
24 ~ ½" Ø (Special), Grade 270 LRS, at 34 kips
28 ~ ½" Ø, Grade 270 LRS, at 29 kips

NOTES:
1. Venting shall be provided by the use of a 1" Ø PVC conduit through a substructure cap or column. Voids between segments of spliced piles shall be connected by 2" Ø hole(s).
2. Any of the given Alternate Strand Patterns may be utilized. The strands shall be located as follows: Place one strand at each corner and place the remaining strands equally spaced between the corner strands. The total strand pattern shall be concentric with the nominal concrete section of the pile.
3. CONTRACTOR OPTION: The 30" pile may be cast SOLID by omitting the 18" Ø void and the 2" Ø vent hole. In this event, the Contractor shall submit calculations for approval and a proposed strand configuration that provide net prestressing after losses equal to 1000 psi. Alternate configurations for the Diagonal Ties, to maintain the position of the 4 ~ No. 8 Bars, may be approved by the Engineer.
4. Work this Index with Index No. 20600 – Notes and Details for Square Prestressed Concrete Piles and Index No. 20601 – Square Prestressed Concrete Pile Splices.

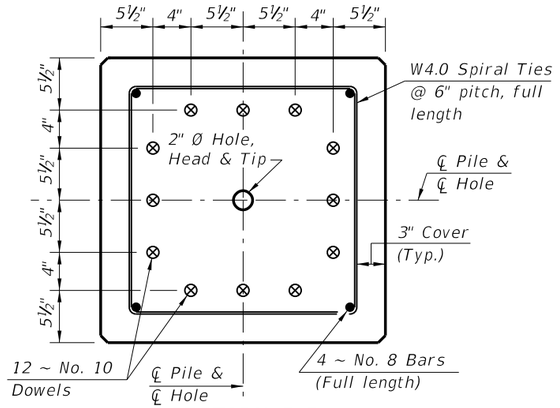

SECTION D-D
(See Nondrivable Unforeseen Reinforced Precast Pile Splice Detail)

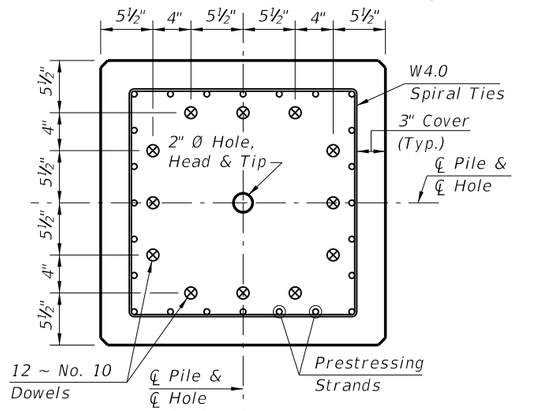

SECTION E-E
(See Drivable Prestressed Precast Pile Splice Detail)

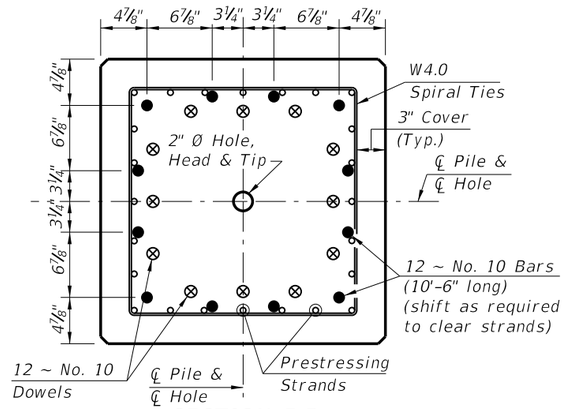

SECTION F-F
(See Drivable Preplanned Pile Splice Detail)

PILE SPLICE DETAILS

6/28/2012 2:23:55 PM rd960rh C:\d\projects\standards\structures\2013book\20630-1of1.dgn

LAST REVISION	REVISION	DESCRIPTION:			INDEX NO.	SHEET NO.
01/01/12			FDOT DESIGN STANDARDS 2013	30" SQUARE PRESTRESSED CONCRETE PILE	20630	1

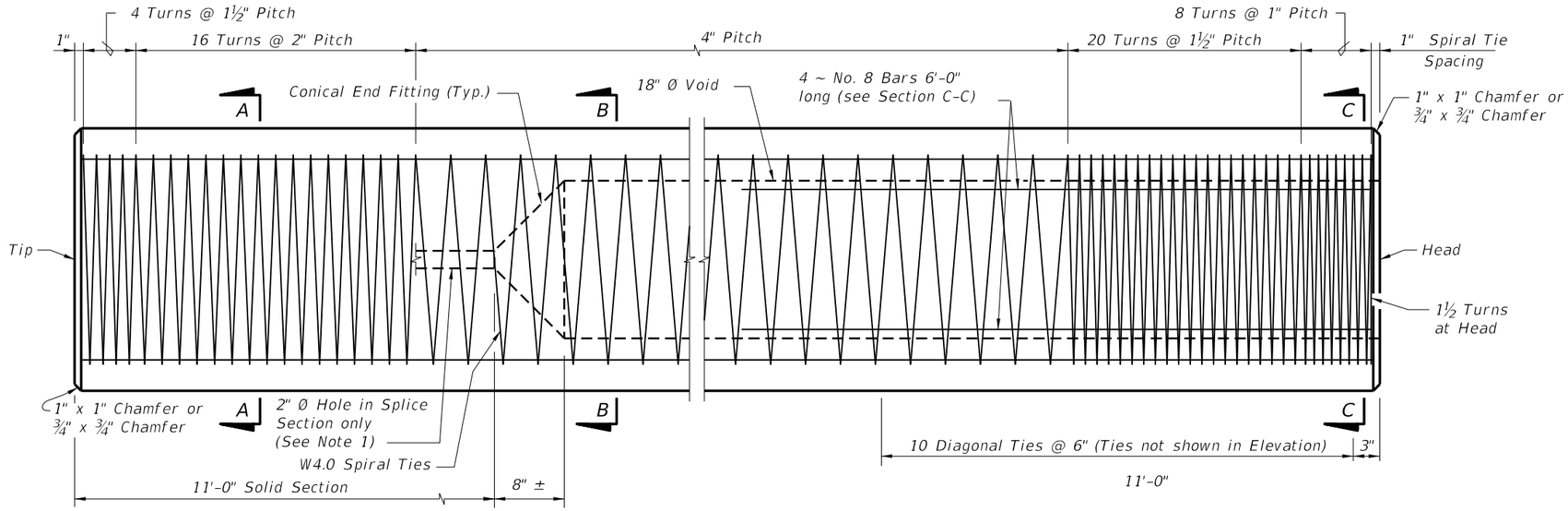

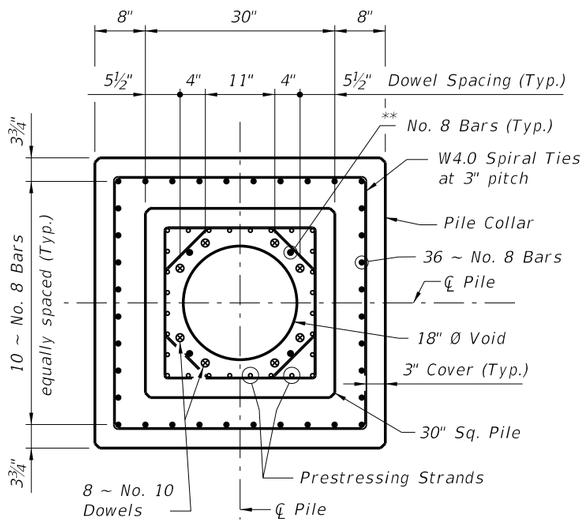

SECTION D-D
SECTION THRU PILE COLLAR

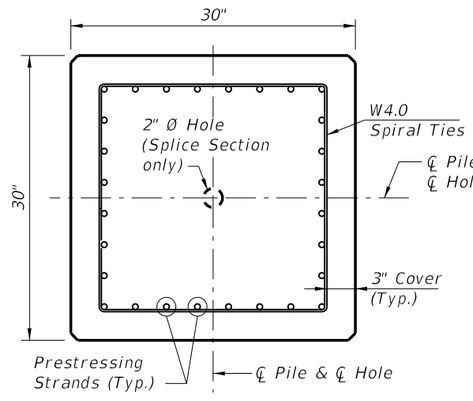

SECTION A-A

ELEVATION

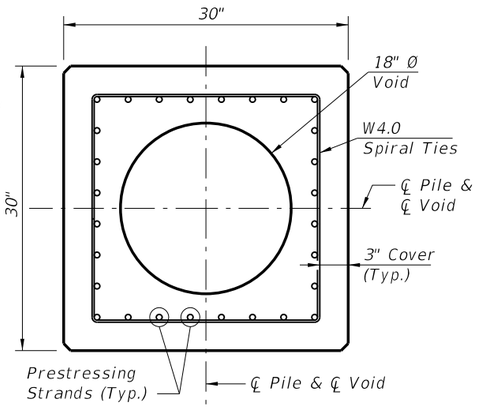

SECTION B-B

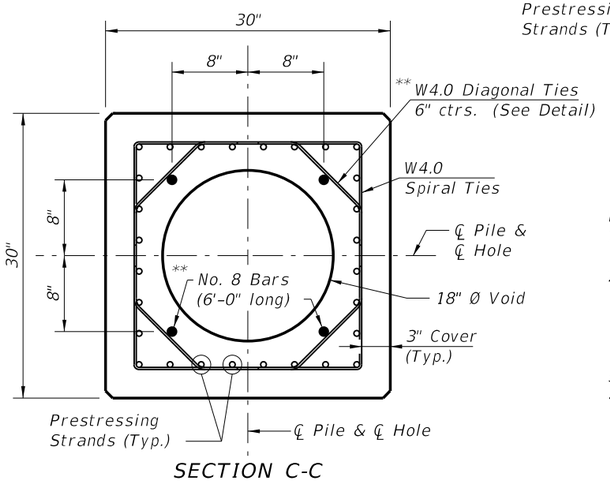

SECTION C-C

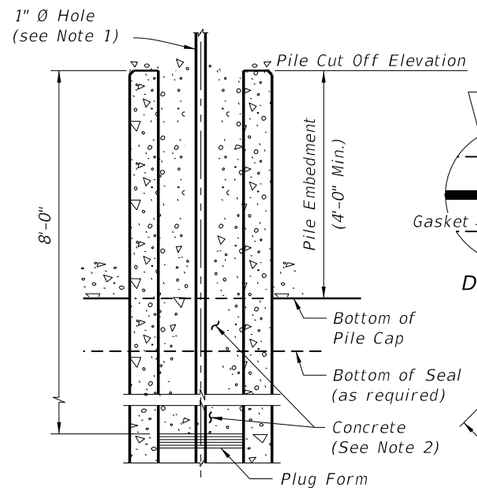

SECTION THROUGH PILE AT PILE CAP

** Omit 4 ~ No. 8 Bars and Diagonal Ties in pre-planned mechanical splice.

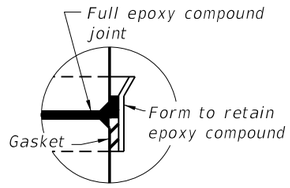

DETAIL A

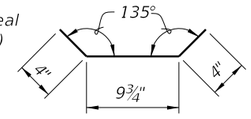

W4.0 DIAGONAL TIE DETAIL

STRAND PATTERN

28 ~ 0.6" Ø, Grade 270 LRS, at 29.5 kips

NOTES:
1. Venting shall be provided by the use of a 1" Ø PVC conduit through a substructure cap or column. Voids between segments of spliced piles shall be connected by 2" Ø hole(s).
2. After the pile is driven and cut to grade, the top 8'-0" of the 18" Ø Void shall be filled with concrete. Prior to filling the top 8'-0" of the 18" Ø Void with concrete, strip the cardboard form material from the void. A stay-in-place corrugated thin wall galvanized pipe may be used to form the void in lieu of the cardboard form material. The concrete fill material shall be of the same type and strength as called for in the pile cap and paid for as substructure concrete.
3. Collar concrete shall reach a strength of 6,000 psi before pile driving is resumed.
4. Work this Index with Index No. 20600 – Notes and Details for Square Prestressed Concrete Piles.

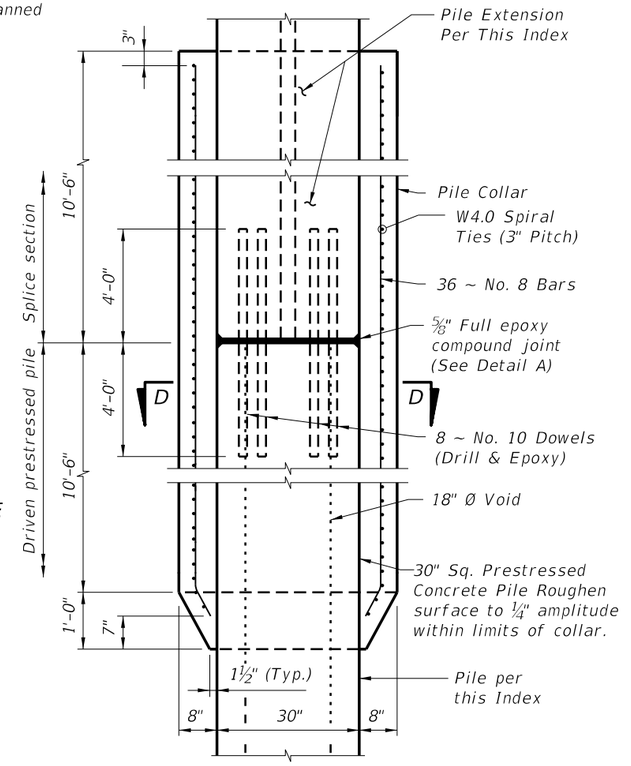

DETAIL OF PILE COLLAR FOR HIGH MOMENT CAPACITY 30" SQUARE PRESTRESSED PILE
-PILE SPLICE DETAIL-

LAST REVISION	REVISION	DESCRIPTION:	FDOT DESIGN STANDARDS 2013	HIGH MOMENT CAPACITY 30" SQUARE PRESTRESSED CONCRETE PILE	INDEX NO.	SHEET NO.
01/01/12					20631	1

C:\d\projects\standards\structures\2013book\20631-1of1.dgn rd960rh 2:23:57 PM 6/28/2012

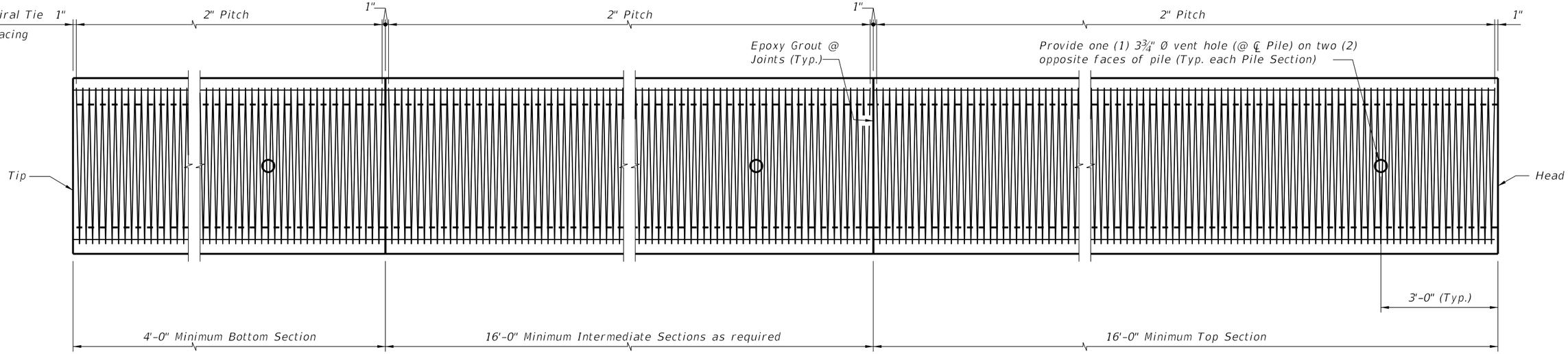

ELEVATION

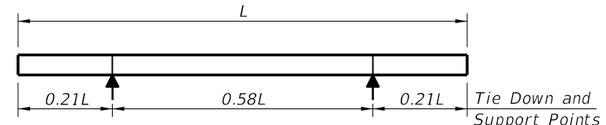

2-POINT SUPPORT

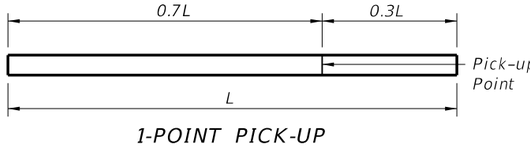

1-POINT PICK-UP

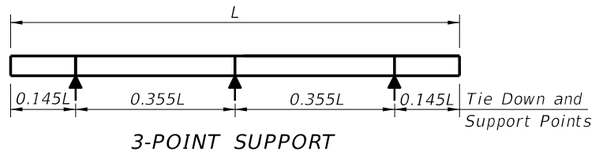

3-POINT SUPPORT

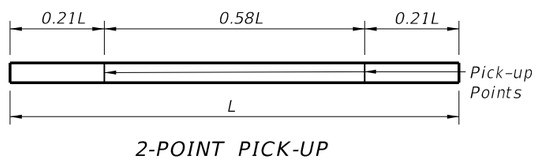

2-POINT PICK-UP

PILE PICK-UP DETAILS

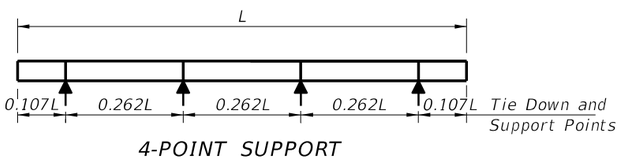

4-POINT SUPPORT

STORAGE AND TRANSPORTATION SUPPORT DETAILS

TABLE OF MAXIMUM PILE PICK-UP AND SUPPORT LENGTHS		
Maximum Pile Length (Feet)	Required Storage and Transportation Detail	Pick-Up Detail
119	2, 3, or 4 point	1 Point
170	2, 3, or 4 point	2 Point

NOTES

DESIGN SPECIFICATIONS:
Florida Department of Transportation (FDOT) "Structures Design Guidelines", Current Edition.
American Association of State Highway and Transportation Officials (AASHTO) "LRFD Bridge Design Specifications", Current Edition.

SPIRAL TIES:
One full wrap of spirals is required at both the head and tip of pile. One half turn required for spiral splices.

CONCRETE CLASS:
Concrete for all piles shall be Class V (Special). Concrete for pile splices shall be Class IV. See "GENERAL NOTES" in Structures Plans for any specific locations where the use of Silica Fume is required.

CONCRETE STRENGTH:
The cylinder strength shall be 6,000 psi minimum at time of transfer of the Prestressing Force.

SPLICE BONDING MATERIAL:
The material to form the joint between pile sections shall be a Type B Epoxy Compound in accordance with Section 926 of the Specifications. The bonding agent used on internal pile surfaces shall be a Type A Epoxy Compound in accordance with Section 926 of the Specifications. Epoxy Compounds used shall be contained on the Qualified Products List (QPL). Use Epoxy Bonding Compound or Epoxy Mortar as recommended by the Manufacturer. For Epoxy Mortar only use sand or other filler material supplied by the manufacturer and in the proportions recommended.

PICK-UP POINTS:
Piles shall be marked at the pick-up points to indicate proper points for attaching handling lines.

REINFORCING STEEL:
All reinforcing steel shall be Grade 60, except that smooth steel wire (W11 spiral ties and longitudinal spacers and W20 ties) shall be manufactured from cold drawn steel wire meeting the requirements of ASTM A82.

PRESTRESSING STEEL:
Prestressing tendons shall be made up of two seven-wire strands. Prestressing strands shall be ½" Ø (Special), Grade 270 low relaxation, at 33.8 kips.

PILE DRIVING AFTER SPLICING:
Pile splices shall reach a minimum strength of 5500 psi before driving is resumed.

C:\d\projects\standards\structures\2013book\20654-1of2.dgn
rd960rh
2:24:00 PM
6/28/2012

LAST REVISION	REVISION	DESCRIPTION:				
01/01/12			FDOT DESIGN STANDARDS 2013	54" PRECAST/POST-TENSIONED CONCRETE CYLINDER PILE	INDEX NO. 20654	SHEET NO. 1

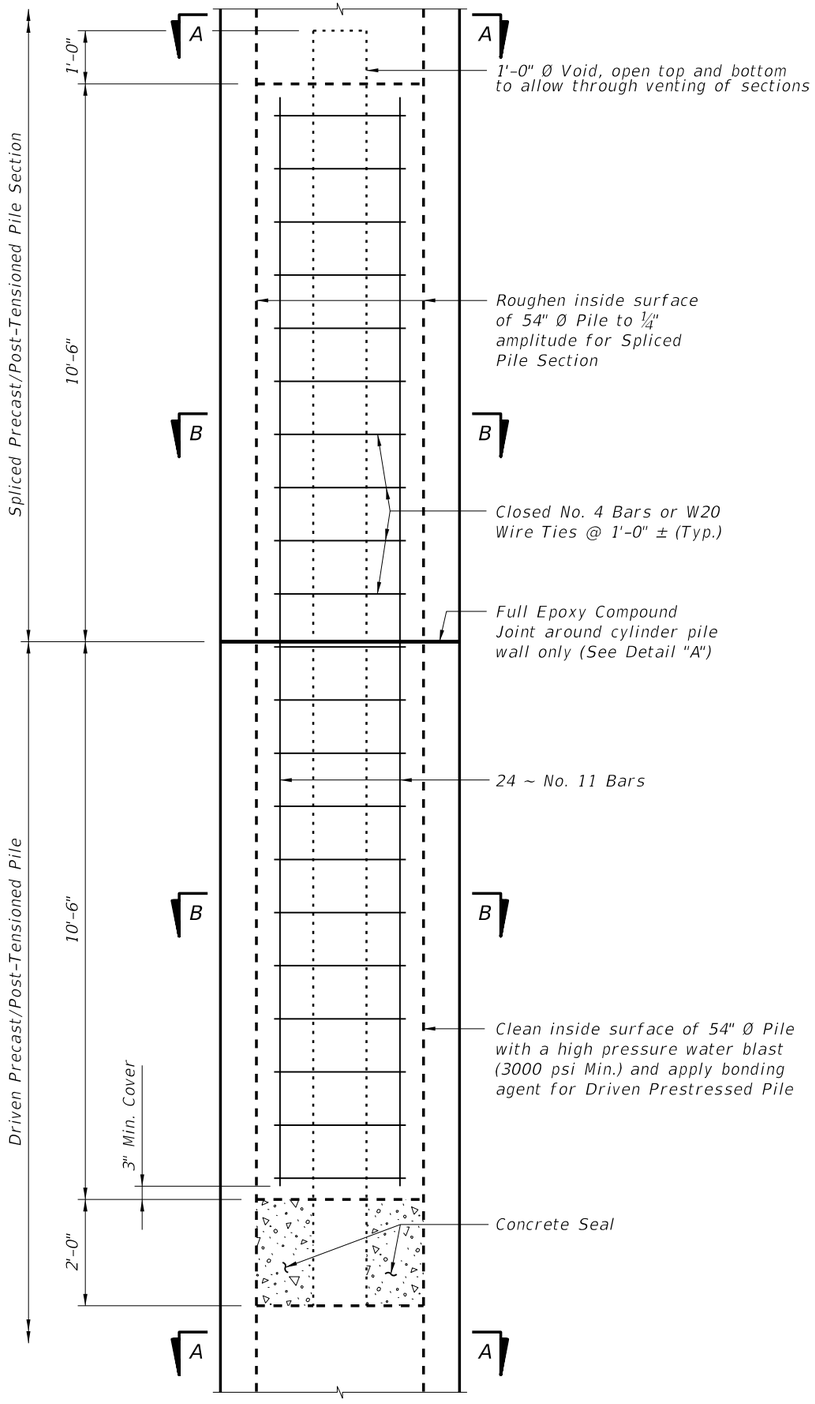

DRIVABLE UNFORESEEN FIELD SPLICE DETAIL
(Cast-In-Place Plug)

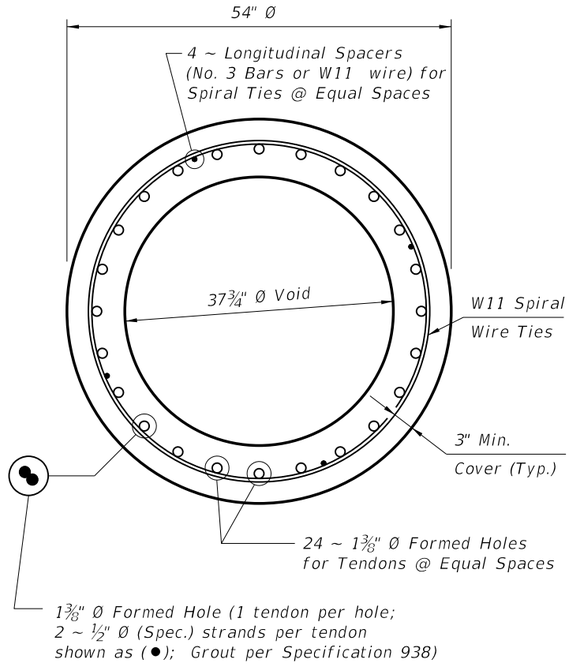

SECTION A-A

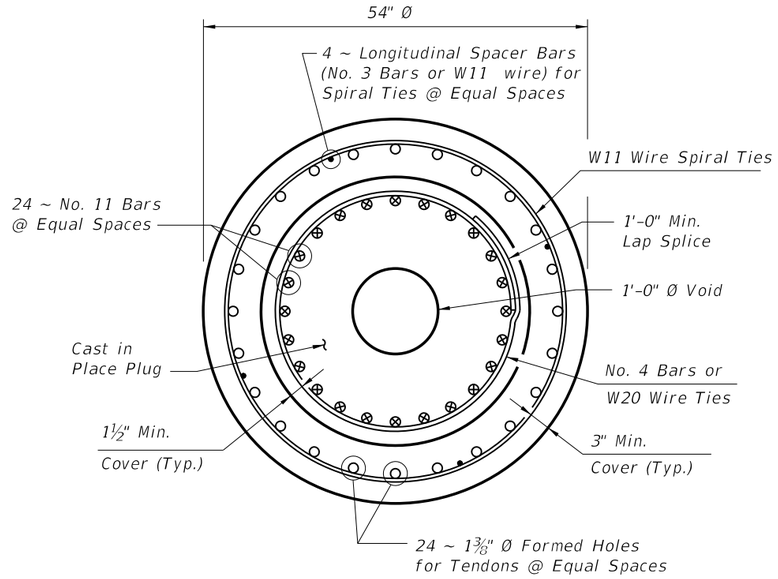

SECTION B-B

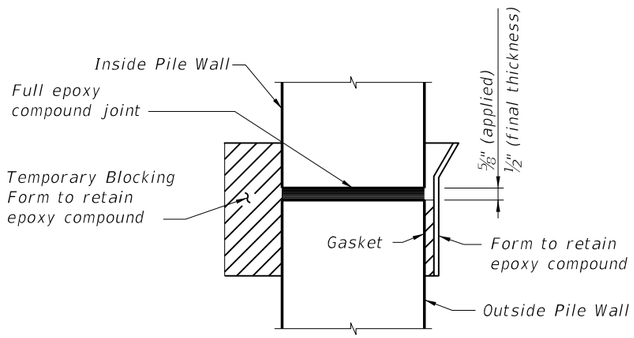

DETAIL "A"

C:\d\projects\standards\structures\2013book\20654-2of2.dgn
rd960rh
2:24:02 PM
6/28/2012

LAST REVISION	REVISION	DESCRIPTION:			INDEX NO.	SHEET NO.
01/01/12			FDOT DESIGN STANDARDS 2013	54" PRECAST/POST-TENSIONED CONCRETE CYLINDER PILE	20654	2

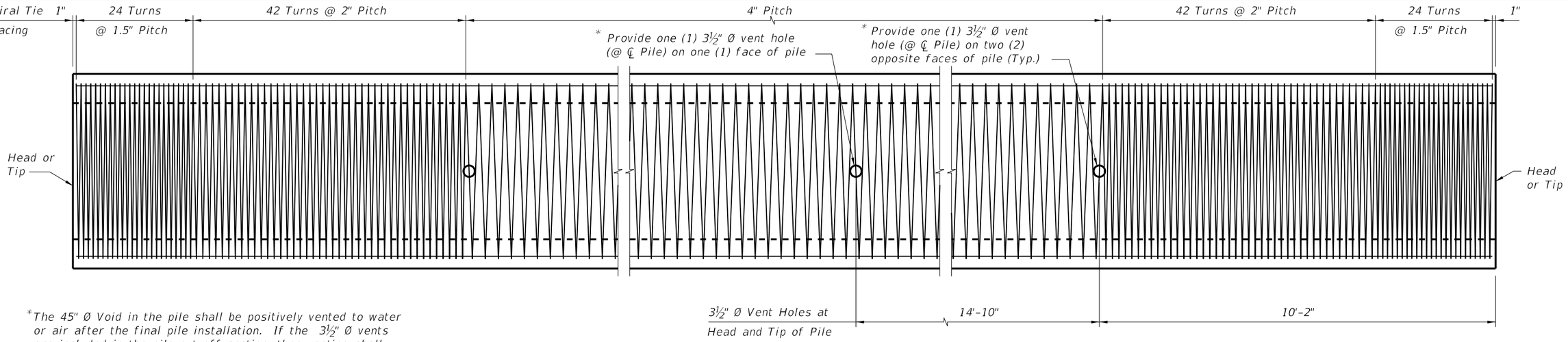

*The 45" Ø Void in the pile shall be positively vented to water or air after the final pile installation. If the 3½" Ø vents are included in the pile cut-off section, then venting shall be provided by the use of a 1" Ø PVC conduit through the substructure cap or column.

ELEVATION

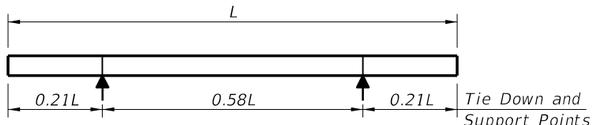

2-POINT SUPPORT

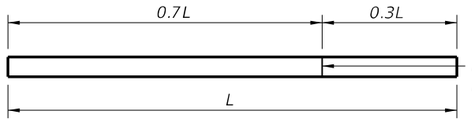

1-POINT PICK-UP

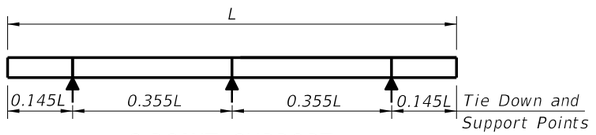

3-POINT SUPPORT

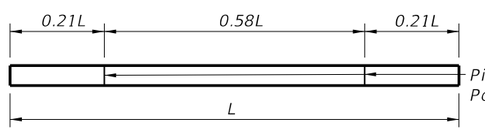

2-POINT PICK-UP

PILE PICK-UP DETAILS

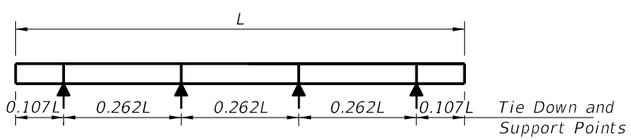

4-POINT SUPPORT

STORAGE AND TRANSPORTATION SUPPORT DETAILS

TABLE OF MAXIMUM PILE PICK-UP AND SUPPORT LENGTHS		
Maximum Pile Length (Feet)	Required Storage and Transportation Detail	Pick-Up Detail
122	2, 3, or 4 point	1 Point
174	2, 3, or 4 point	2 Point

NOTES

DESIGN SPECIFICATIONS:
Florida Department of Transportation (FDOT) "Structures Design Guidelines", Current Edition.
American Association of State Highway and Transportation Officials (AASHTO) "LRFD Bridge Design Specifications", Current Edition.

SPIRAL TIES:
One full wrap of spirals is required at both the head and tip of pile. One half turn required for spiral splices.

CONCRETE CLASS:
Concrete for all piles shall be Class V (Special). Concrete for pile splices shall be Class IV. See "GENERAL NOTES" in Structures Plans for any specific locations where the use of Silica Fume is required.

CONCRETE STRENGTH:
The cylinder strength shall be 4,000 psi minimum at time of transfer of the Prestressing Force.

SPLICE BONDING MATERIAL:
The material to form the joint between pile sections shall be a Type B Epoxy Compound in accordance with Specification Section 926. The bonding agent used on internal pile surfaces shall be a Type A Epoxy Compound in accordance with Specification Section 926. Epoxy Compounds used shall be contained on the Qualified Products List (QPL). Use Epoxy Bonding Compound or Epoxy Mortar as recommended by the Manufacturer. For Epoxy Mortar only use sand or other filler material supplied by the manufacturer and in the proportions recommended.

PICK-UP POINTS:
Piles shall be marked at the pick-up points to indicate proper points for attaching handling lines.

REINFORCING STEEL:
All reinforcing steel shall be Grade 60, except that smooth steel wire (W11 spiral ties and W20 ties) shall be manufactured from cold drawn steel wire meeting the requirements of ASTM A82.

PRESTRESSING STEEL:
Prestressing steel shall be 0.6" Ø seven-wire strand, Grade 270 low relaxation, at 44.0 kips.

PILE DRIVING AFTER SPLICING:
Pile splices shall reach a minimum strength of 5500 psi before driving is resumed.

C:\d\projects\standards\structures\2013book\20660-1of2.dgn
rd960rh
2:24:04 PM
6/28/2012

LAST REVISION	REVISION	DESCRIPTION:		FDOT DESIGN STANDARDS 2013	60" PRESTRESSED CONCRETE CYLINDER PILE	INDEX NO.	SHEET NO.
01/01/12						20660	1

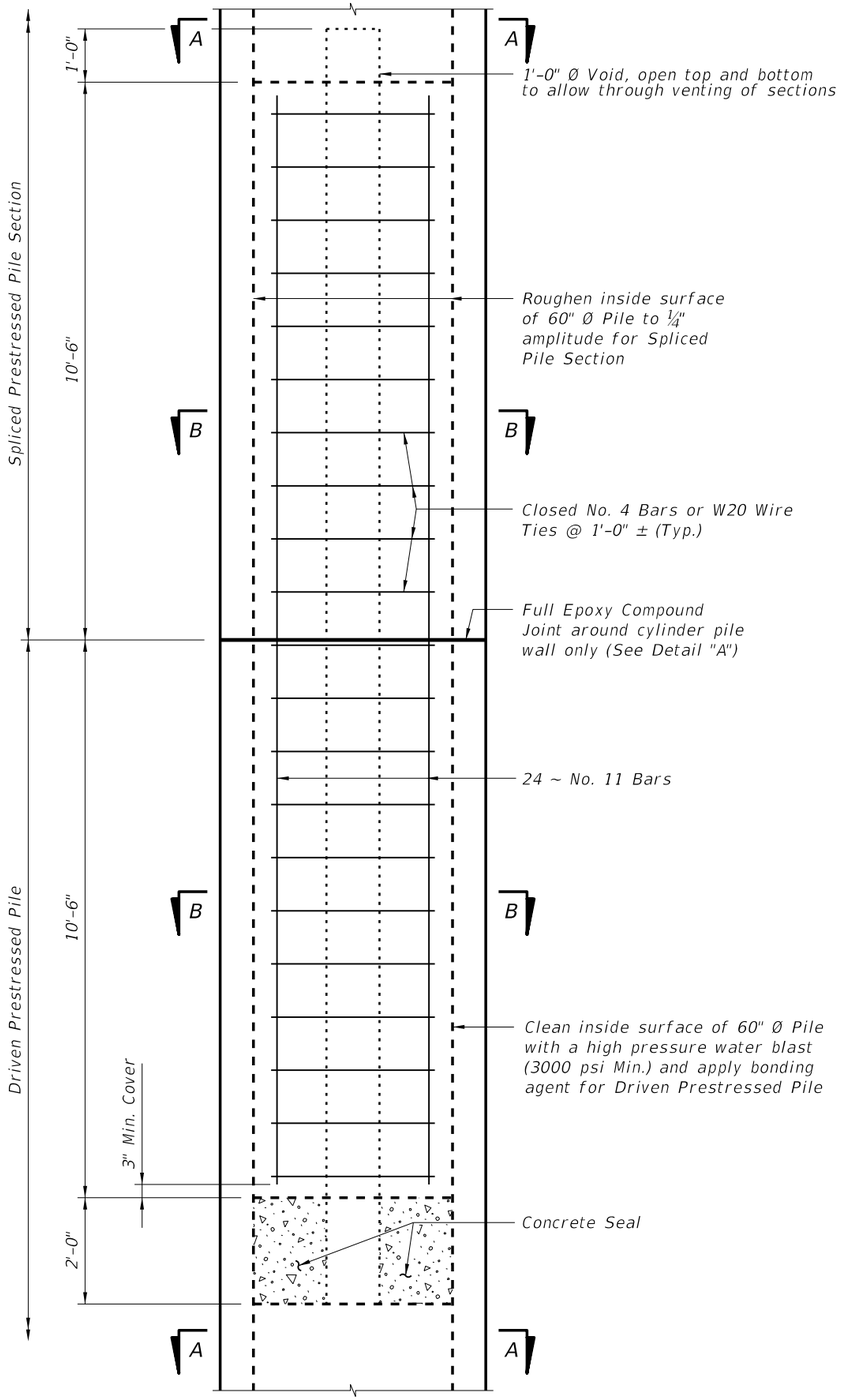

DRIVABLE UNFORESEEN FIELD SPLICE DETAIL
(Cast in Place Plug)

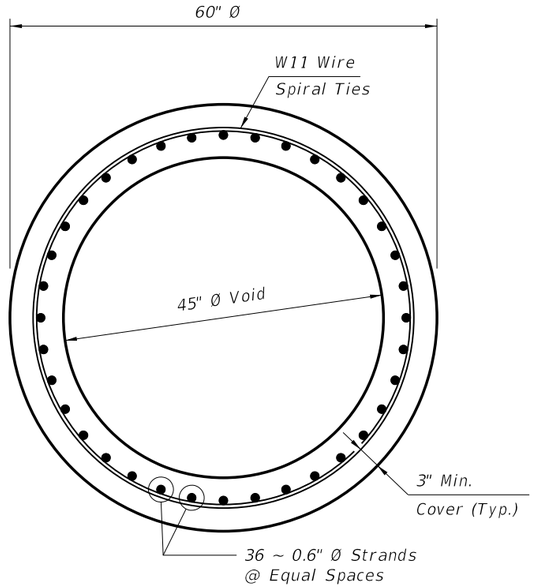

SECTION A-A

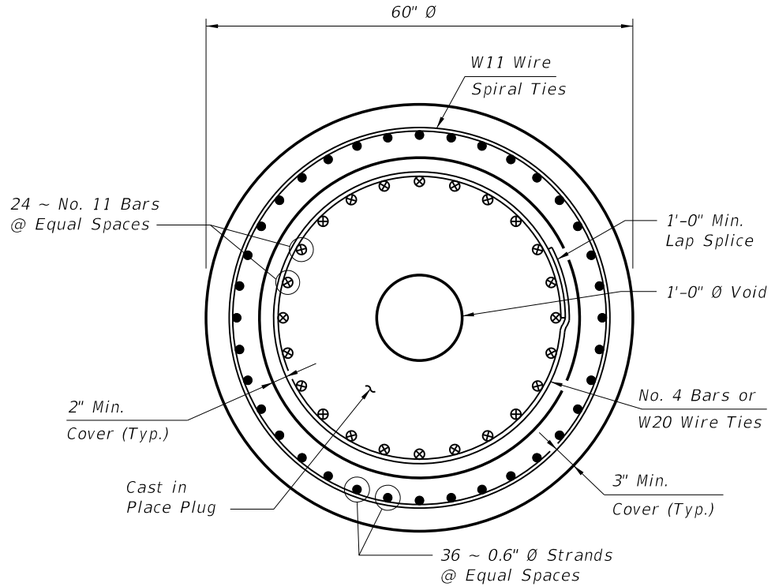

SECTION B-B

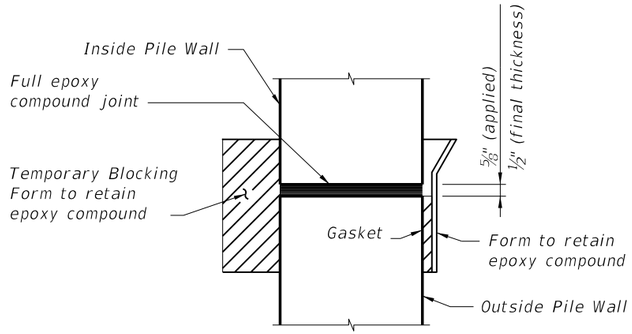

DETAIL "A"

C:\d\projects\standards\structures\2013book\20660-2of2.dgn
rd960rh
2:24:07 PM
6/28/2012

LAST REVISION	REVISION	DESCRIPTION:			INDEX NO.	SHEET NO.
01/01/12			FDOT DESIGN STANDARDS 2013	60" PRESTRESSED CONCRETE CYLINDER PILE	20660	2

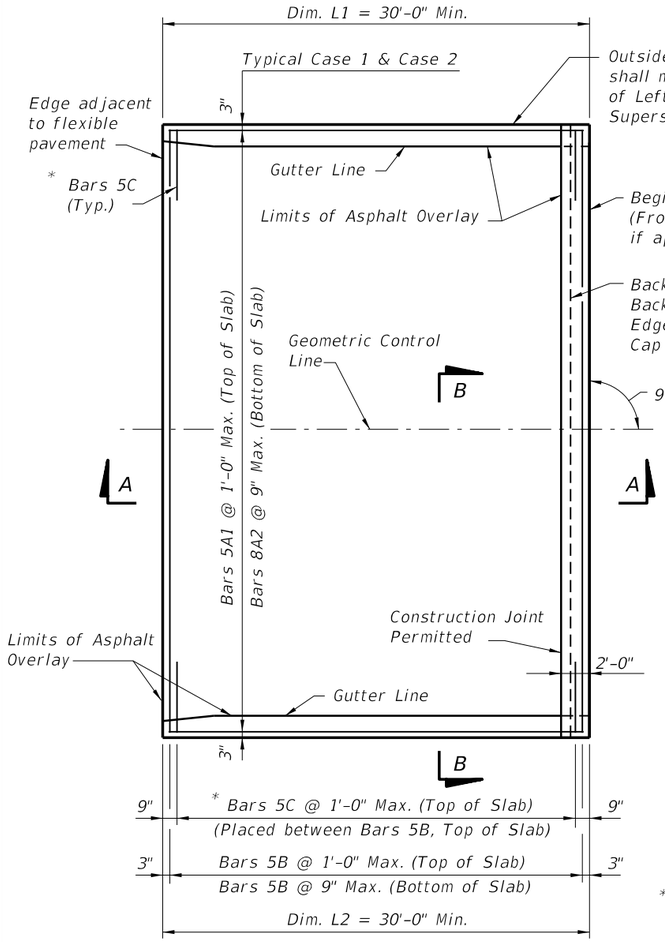

PLAN VIEW (CASE 1)

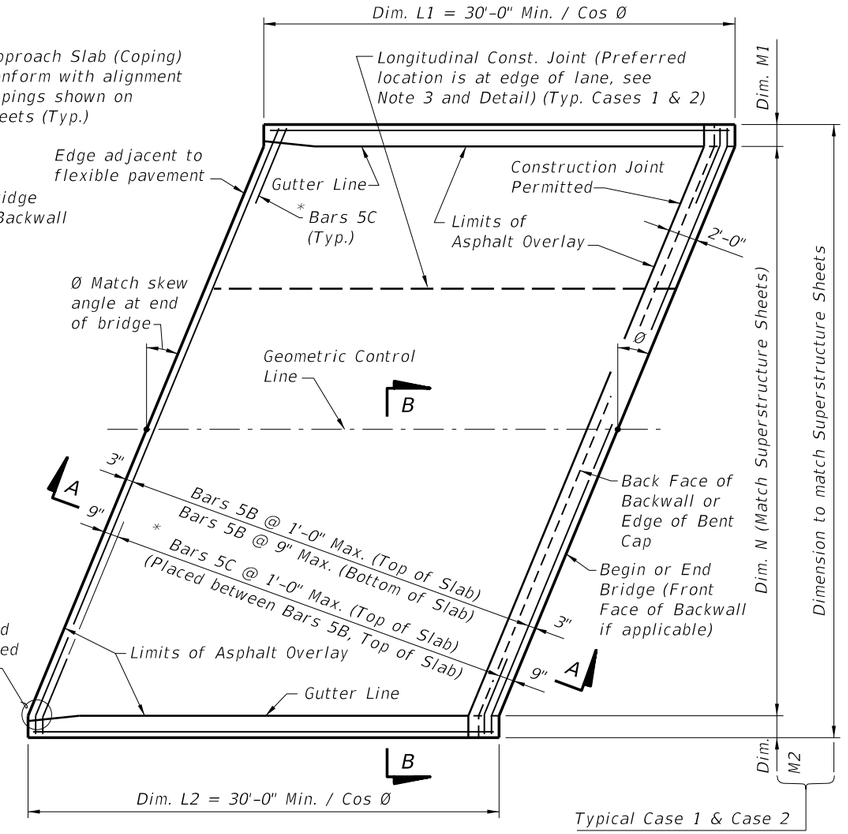

PLAN VIEW (CASE 2)

* NOTE: Bars 5C are required as shown when either the 32" or 42" F-Shape Traffic Railings or the Traffic Railing/Sound Barrier are used at the edge of the Approach Slab.

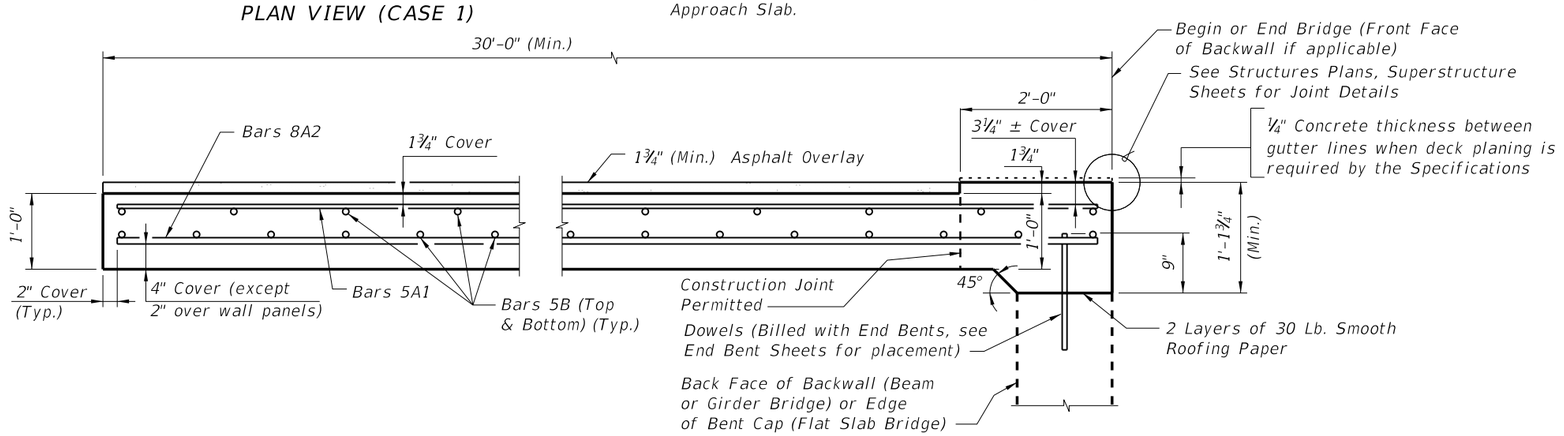

SECTION A-A

GENERAL NOTES

1. SURFACE TREATMENT: As an option to Class 4 Floor Finish (Bridge Floor Grooving) per Section 400 a hand tined or heavy broomed finish may be permitted on the concrete portion of the riding surface. Sidewalk areas shall receive a broomed finish. The top surface of the concrete beneath the asphalt overlay shall be raked.
2. UTILITIES: If required, see Structures Plans, Utility Conduit Detail Sheets for details.
3. When a longitudinal construction joint is necessary or allowed by the Engineer, the transverse steel shall be extended as shown in the Longitudinal Construction Joint Detail.
4. The plan view for CASE 1 applies when the skew angle (Ø) = 0°. Relevant details also apply to CASE 2.
5. The plan view for CASE 2 applies where the skew angle (Ø) is > 0°. The slab shown represents a skew to the right for an approach slab at begin bridge; approach slab at the end of bridge or a left skew shall be treated similarly.
6. Railings, parapets and traffic separators shall be provided as shown in Structures Plans. Payment for these items shall be included in the pay item for the required item. Raised sidewalks shall be provided as shown in the Structures Plans. Payment shall be included in the pay items for approach slab concrete and reinforcement. Welded Wire Reinforcement for the edge of Approach Slabs on retaining wall is not included in the estimated quantity for reinforcing steel and is considered incidental to the work. Welded Wire Reinforcement shall conform to ASTM A185.
7. ASPHALT OVERLAY: Payment for asphalt overlay items is included in Roadway Pay Items. Continue the asphalt pavement over the approach slab and match the friction course type used on the roadway. For FC-5, place the final structural course 1.0" thick and the friction course 0.75" thick. For FC-9.5, place the final structural course 0.75" thick and the friction course 1.0" thick. For FC-12.5, place the friction course in one layer 1.75" thick.
8. Approach slabs shown in Plan View Cases 1 and 2 represent a typical approach slab with edge barriers and no sidewalks. See additional approach slab sheets for sidewalk and other pertinent details.

CROSS REFERENCES:

For Section B-B, Longitudinal Construction Joint Detail and Approach Slab Details see Sheet 2.

For Estimated Quantities see Structures Plans.

C:\d\projects\standards\structures\2013book\20900-1of2.dgn
rd960rh
2:24:09 PM
6/28/2012

LAST REVISION	REVISION	DESCRIPTION:			INDEX NO.	SHEET NO.
07/01/12			FDOT DESIGN STANDARDS 2013	APPROACH SLABS (FLEXIBLE PAVEMENT APPROACHES)	20900	1

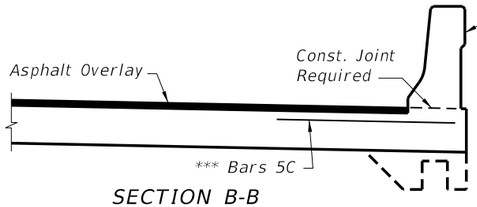

SECTION B-B
STANDARD APPROACH SLAB

NOTE:
Geometry of Traffic Railings, Pedestrian/Bicycle Railings, Traffic Separators and Sidewalks to match those on adjoining bridge.

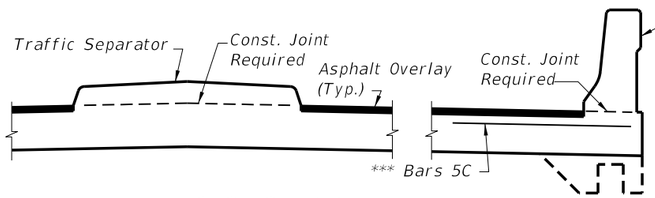

SECTION B-B
APPROACH SLAB WITH TRAFFIC SEPARATOR

*** NOTE: Bars 5C are required as shown when either the 32" or 42" F-Shape Traffic Railing or the Traffic Railing/Sound Barrier are used at the edge of the Approach Slab.

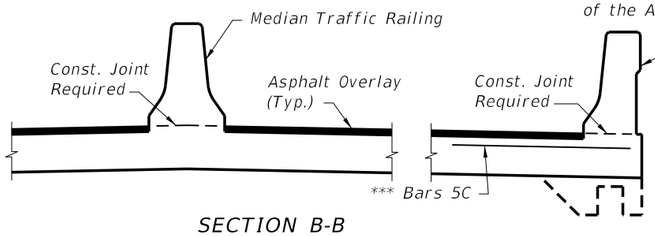

SECTION B-B
APPROACH SLAB WITH MEDIAN TRAFFIC RAILING

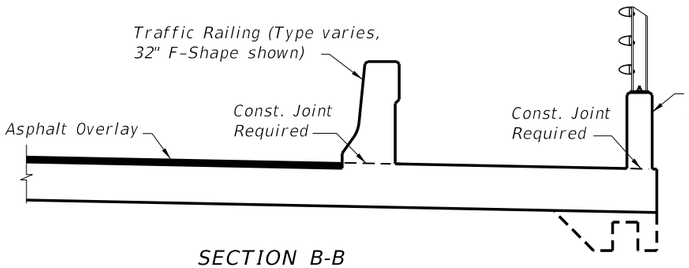

SECTION B-B
APPROACH SLAB WITH SIDEWALK

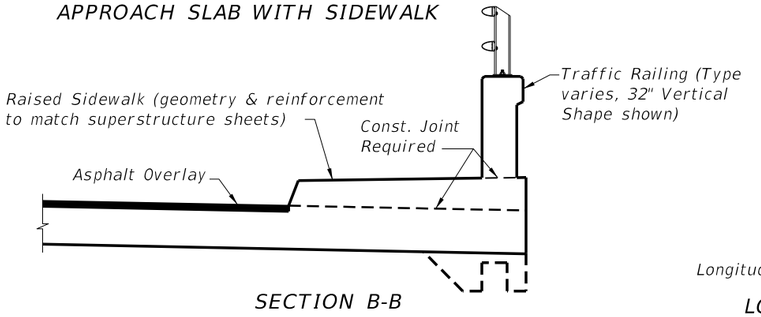

SECTION B-B
APPROACH SLAB WITH RAISED SIDEWALK

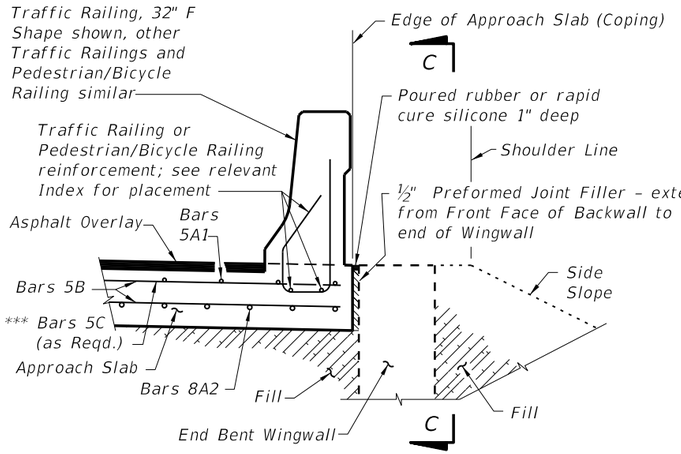

SECTION THRU APPROACH SLAB
AND END BENT WINGWALL

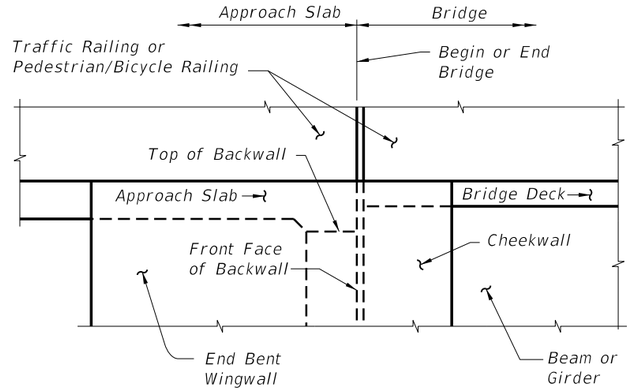

VIEW C-C AT BEGIN OR END BRIDGE (BEAM
BRIDGE SHOWN, FLAT SLAB BRIDGE SIMILAR)

APPROACH SLAB WITH WINGWALL DETAILS

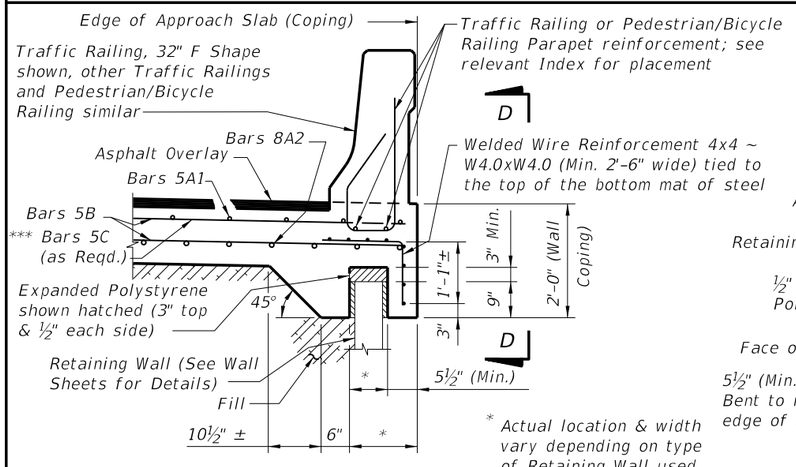

* Actual location & width vary depending on type of Retaining Wall used

SECTION THRU APPROACH SLAB
AND RETAINING WALL

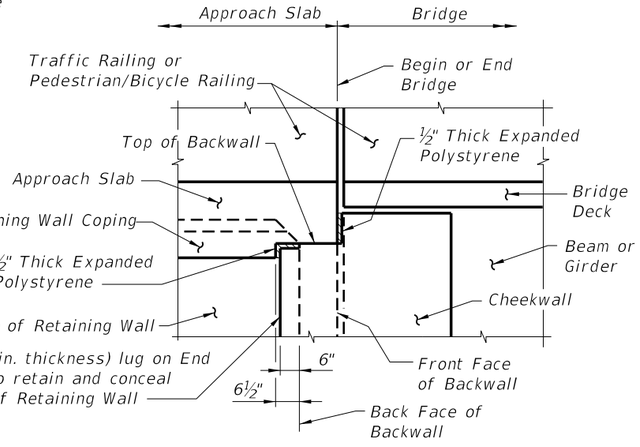

VIEW D-D AT BEGIN OR END BRIDGE (BEAM
BRIDGE SHOWN, FLAT SLAB BRIDGE SIMILAR)

APPROACH SLAB WITH RETAINING WALL DETAILS

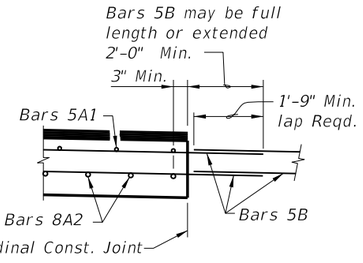

LONGITUDINAL CONSTRUCTION
JOINT DETAIL

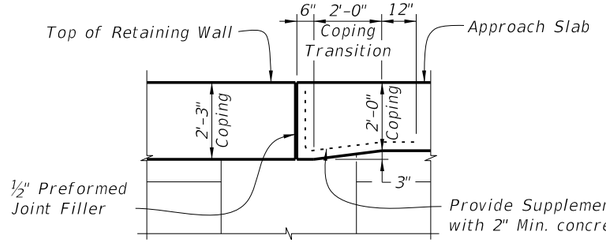

COPING TRANSITION DETAIL FOR
RETAINING WALLS WITH 2'-3" COPING HEIGHT
(Railing Not Shown For Clarity)

CROSS REFERENCES:

For location of Section B-B and Longitudinal Construction Joint Detail see Index No. 20900, Sheet 1.

C:\d\projects\standards\structures\2013book\20900-2of2.dgn
rd960rh
2:24:12 PM
6/28/2012

LAST REVISION	REVISION	DESCRIPTION:			INDEX NO.	SHEET NO.
01/01/12			FDOT DESIGN STANDARDS 2013	APPROACH SLABS (FLEXIBLE PAVEMENT APPROACHES)	20900	2

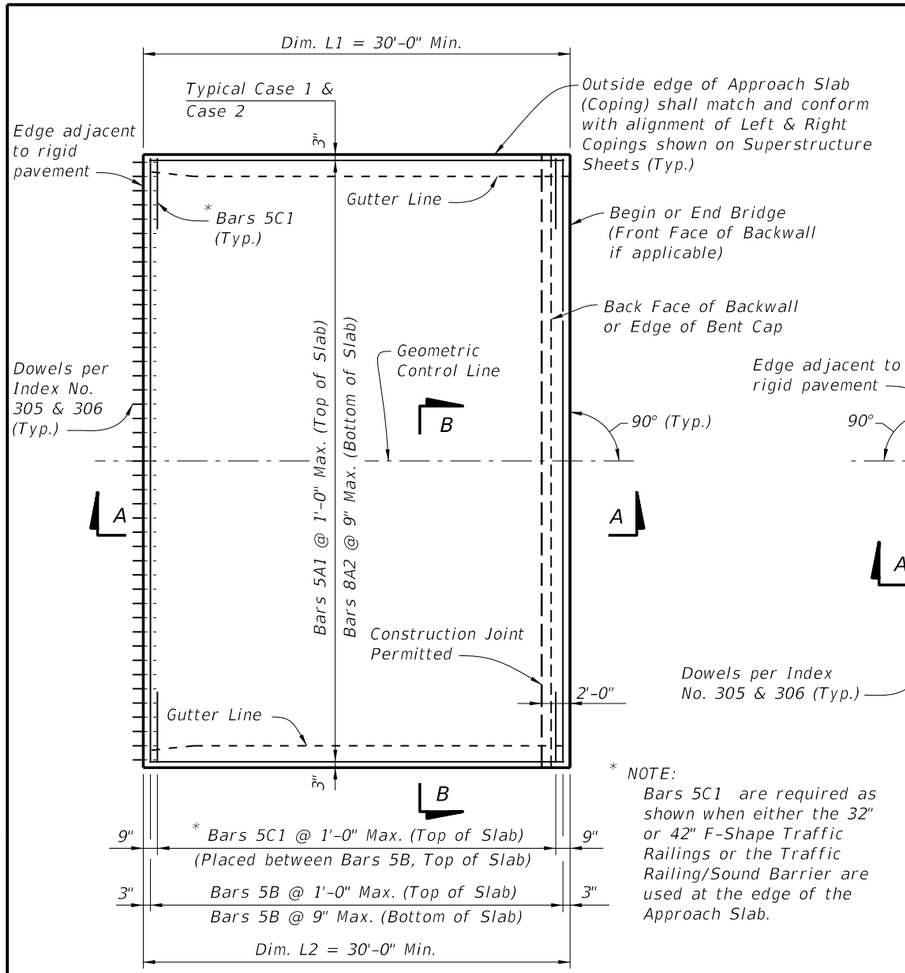

* NOTE:
Bars 5C1 are required as shown when either the 32" or 42" F-Shape Traffic Railings or the Traffic Railing/Sound Barrier are used at the edge of the Approach Slab.

PLAN VIEW (CASE 1)

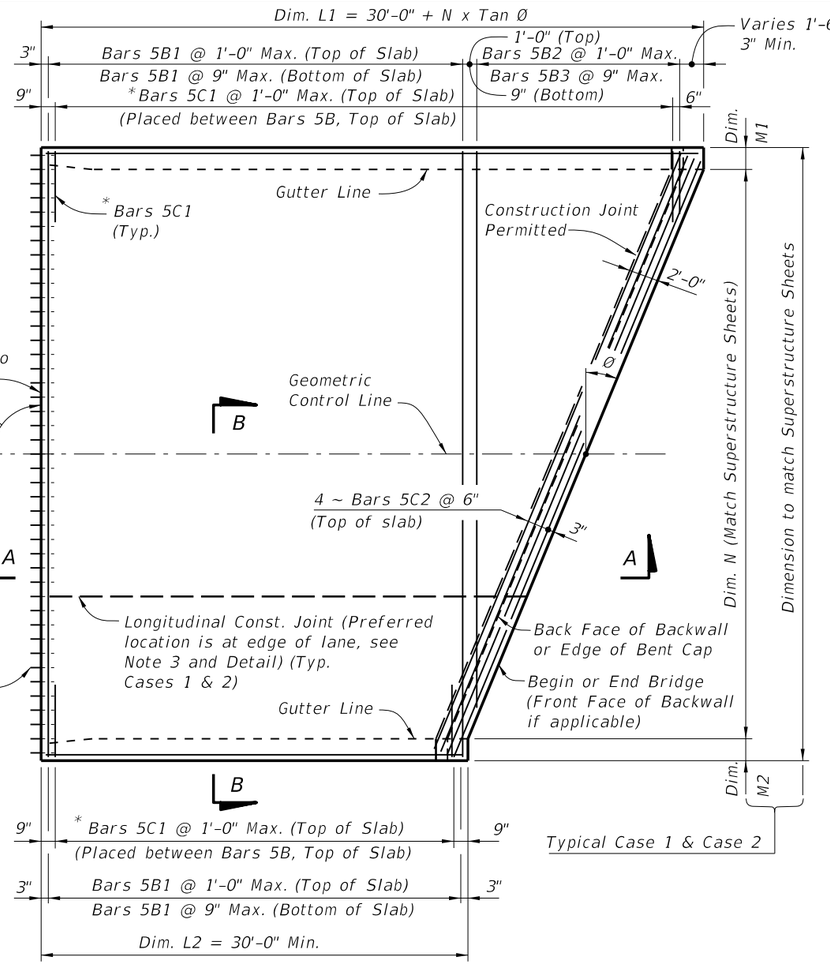

PLAN VIEW (CASE 2)

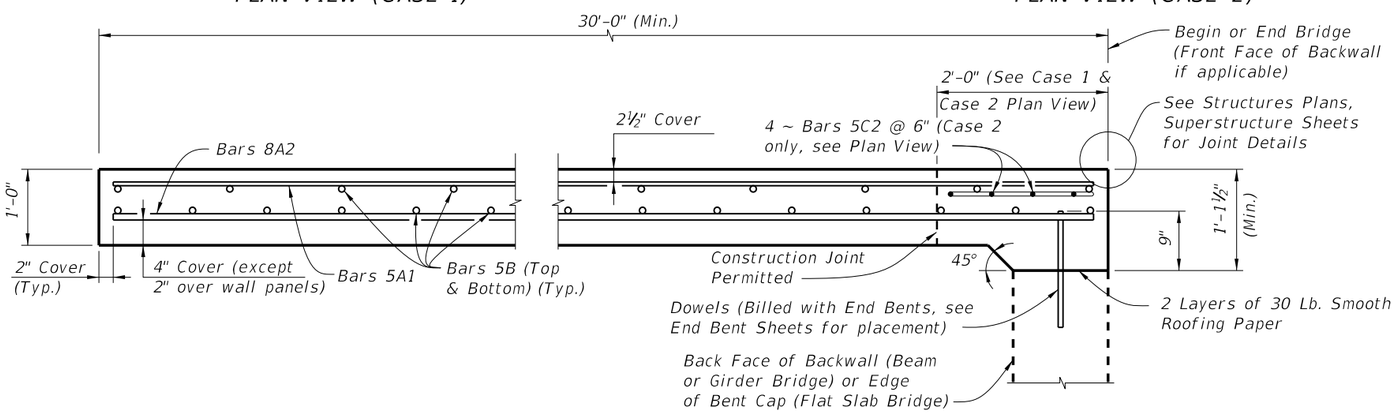

SECTION A-A

GENERAL NOTES

1. SURFACE TREATMENT: Apply a Class 4 Floor Finish (Grooved) to the riding surface from begin or end approach slab joint to begin or end bridge. See Bid Item Notes. Apply a broomed finish to sidewalk areas.
2. UTILITIES: If required, see Structures Plans, Utility Conduit Detail Sheet for details.
3. When a longitudinal construction joint is necessary or allowed by the Engineer, the transverse steel shall be extended as shown in the Longitudinal Construction Joint Detail.
4. The plan view for CASE 1 applies when the skew angle (Ø) = 0°. Relevant details also apply to CASE 2.
5. The plan view for CASE 2 applies where the skew angle (Ø) is > 0°. The slab shown represents a skew to the right for an approach slab at begin bridge; approach slab at the end of bridge or a left skew shall be treated similarly. The shown reinforcement shall be utilized, and Dowels shall be provided in accordance with Index Nos. 305 and 306.
6. Railings, parapets and traffic separators shall be provided as shown in Structures Plans. Payment for these items shall be included in the pay item for the required item. Raised sidewalks shall be provided as shown in Structures Plans. Payment shall be included in the pay items for approach slab concrete and reinforcement. Welded Wire Reinforcement for the edge of Approach Slabs on retaining wall is not included in the estimated quantity for reinforcing steel and is considered incidental to the work. Welded Wire Reinforcement shall conform to ASTM A185.
7. PROFILOGRAPH: If profilograph requirements apply, planing may be required. The permitted construction joint shown in Section A-A will facilitate the placement of the expansion joint.
8. Approach slabs shown in Plan View Cases 1 and 2 represent a typical approach slab with edge barriers and no sidewalks. See additional approach slab sheets for sidewalk and other pertinent details.

CROSS REFERENCES:

For Section B-B, Longitudinal Construction Joint Detail and Approach Slab Details see Index No. 20910, Sheet 2.

For Estimated Quantities see Structures Plans.

C:\d\projects\standards\structures\2013book\20910-1of2.dgn
rd960rh
2:24:15 PM
6/28/2012

LAST REVISION	REVISION	DESCRIPTION:			INDEX NO.	SHEET NO.
07/01/12			FDOT DESIGN STANDARDS 2013	APPROACH SLABS (RIGID PAVEMENT APPROACHES)	20910	1

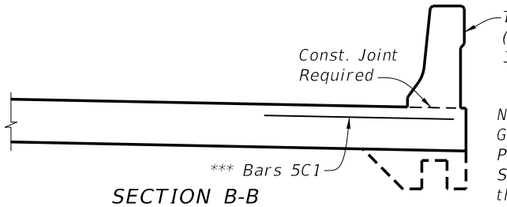

NOTE:
Geometry of Traffic Railings, Pedestrian/Bicycle Railings, Traffic Separators and Sidewalks to match those on adjoining bridge.

SECTION B-B
STANDARD APPROACH SLAB

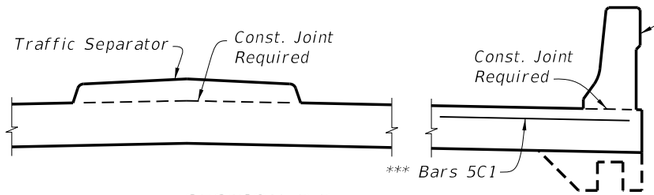

SECTION B-B
APPROACH SLAB WITH TRAFFIC SEPARATOR

*** NOTE: Bars 5C are required as shown when either the 32" or 42" F-Shape Traffic Railing or the Traffic Railing/Sound Barrier are used at the edge of the Approach Slab.

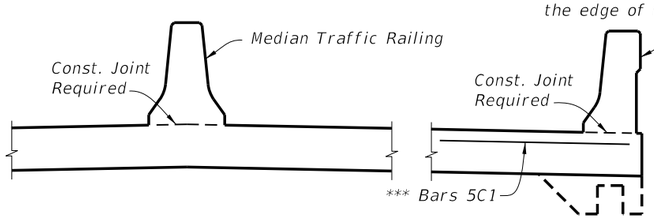

SECTION B-B
APPROACH SLAB WITH MEDIAN TRAFFIC RAILING

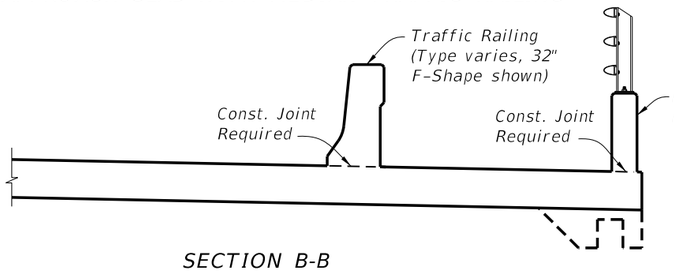

SECTION B-B
APPROACH SLAB WITH SIDEWALK

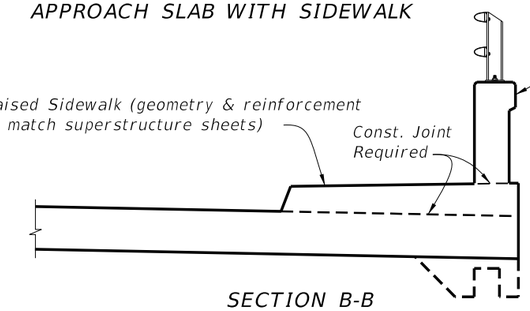

SECTION B-B
APPROACH SLAB WITH RAISED SIDEWALK

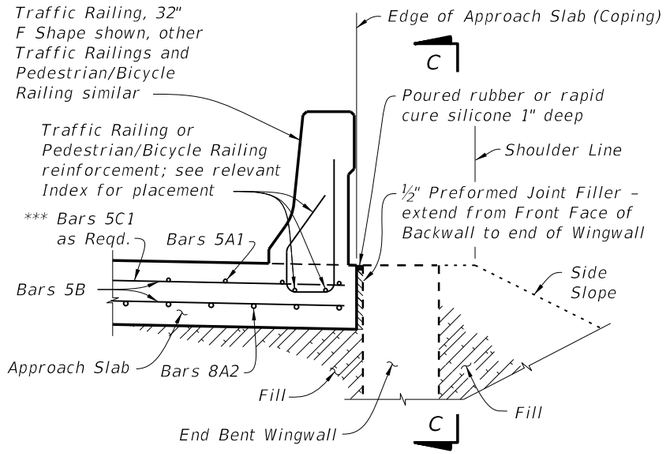

SECTION THRU APPROACH SLAB
AND END BENT WINGWALL

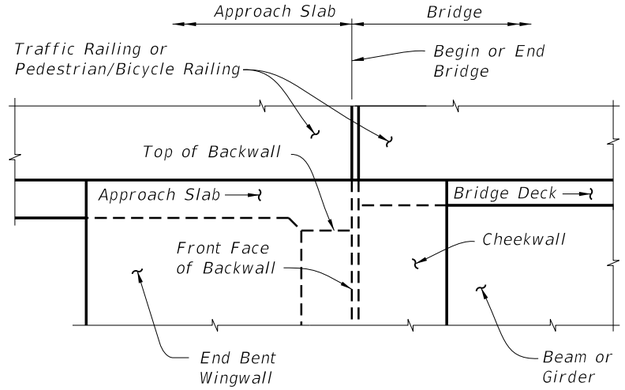

VIEW C-C AT BEGIN OR END BRIDGE (BEAM BRIDGE SHOWN, FLAT SLAB BRIDGE SIMILAR)

APPROACH SLAB WITH WINGWALL DETAILS

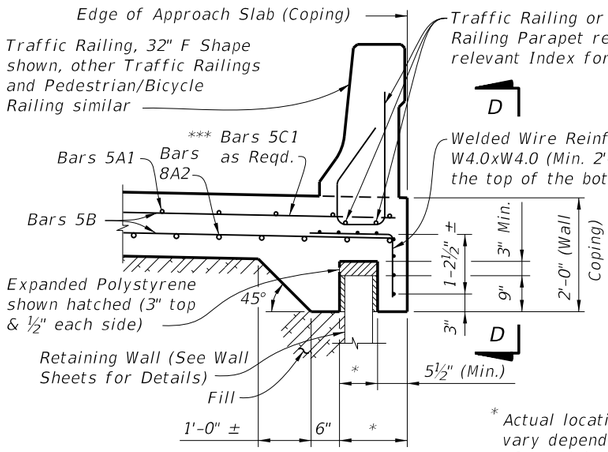

* Actual location & width vary depending on type of Retaining Wall used

SECTION THRU APPROACH SLAB
AND RETAINING WALL

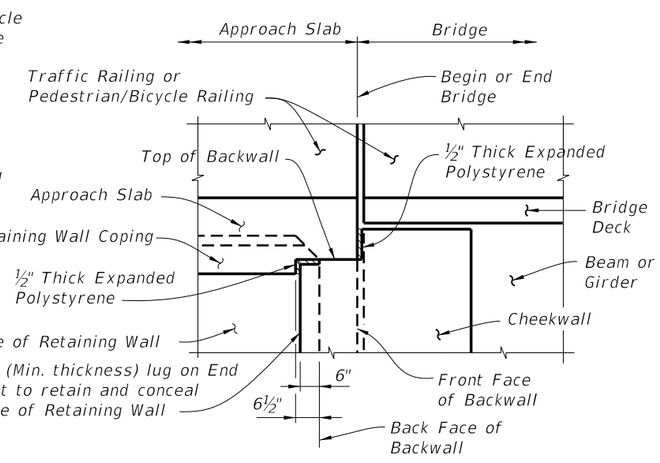

VIEW D-D AT BEGIN OR END BRIDGE (BEAM BRIDGE SHOWN, FLAT SLAB BRIDGE SIMILAR)

APPROACH SLAB WITH RETAINING WALL DETAILS

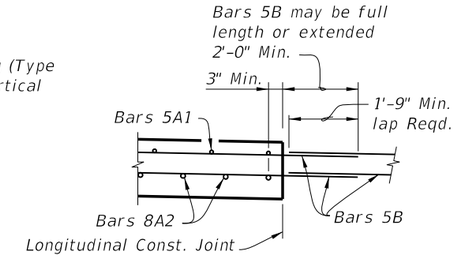

LONGITUDINAL CONSTRUCTION
JOINT DETAIL

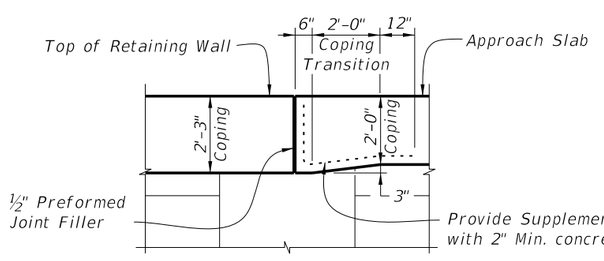

COPING TRANSITION DETAIL FOR
RETAINING WALLS WITH 2'-3" COPING HEIGHT
(Railing Not Shown For Clarity)

CROSS REFERENCES:

For location of Section B-B and Longitudinal Construction Joint Detail see Index No. 20910, Sheet 1.

C:\d\projects\standards\structures\2013book\20910_2of2.dgn
rd960rh
2:24:19 PM
6/28/2012

LAST REVISION	REVISION	DESCRIPTION:			INDEX NO.	SHEET NO.
01/01/12			FDOT DESIGN STANDARDS 2013	APPROACH SLABS (RIGID PAVEMENT APPROACHES)	20910	2

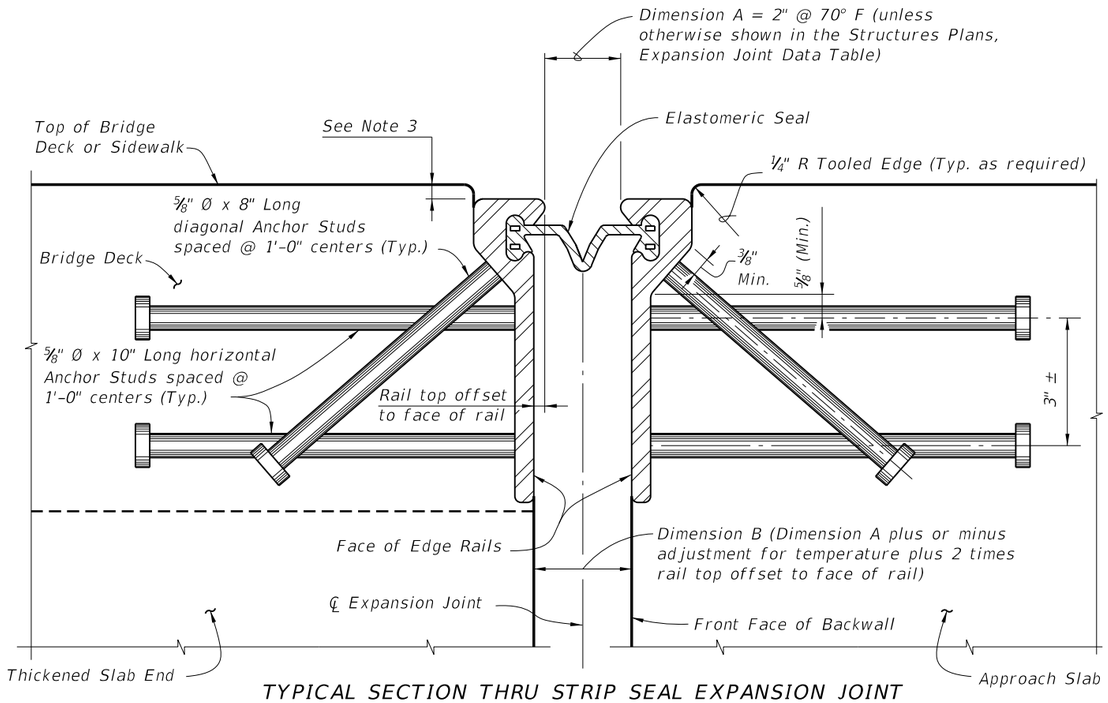

TYPICAL SECTION THRU STRIP SEAL EXPANSION JOINT
(Begin or End Concrete Girder Bridge shown,
Intermediate Supports and Steel Girder Bridge similar.
Reinforcing Steel and Girder details not shown for clarity.)

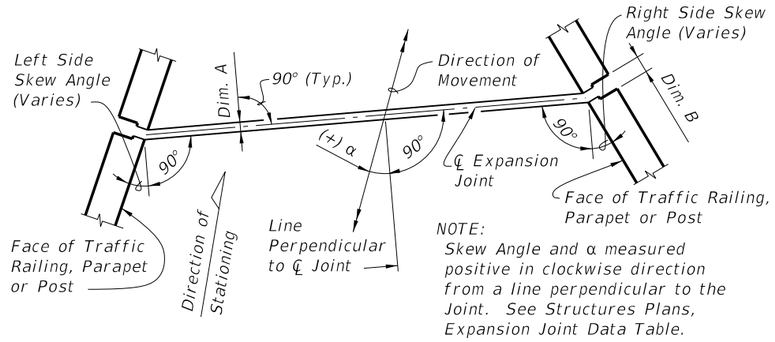

MOVEMENT SCHEMATIC

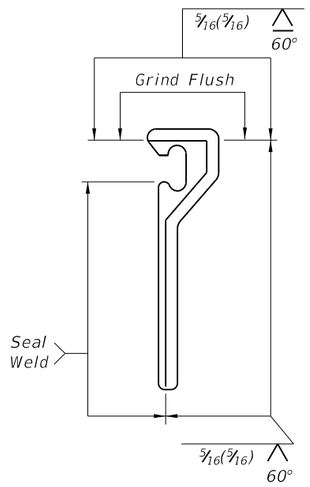

SHOP SPLICE DETAIL

GENERAL NOTES:

1. *Furnish Strip Seal Expansion Joint Systems in accordance with Specification Section 458.*
2. *Shape of Edge Rail shown is representative, minor variations depending on manufacturer are permitted.*
3. *Recess the Edge Rail below the concrete surface in accordance with Specification Section 458.*
4. *Refer to Specification 458 and the Expansion Joint Data Table in the Structures Plans for installation and fabrication requirements and adjustments to Dimension A.*

6/28/2012 2:24:22 PM rd960rh C:\d\projects\standards\structures\2013book\21100-1of3.dgn

LAST REVISION	REVISION	DESCRIPTION:				
01/01/12			FDOT DESIGN STANDARDS 2013	STRIP SEAL EXPANSION JOINT	INDEX NO. 21100	SHEET NO. 1

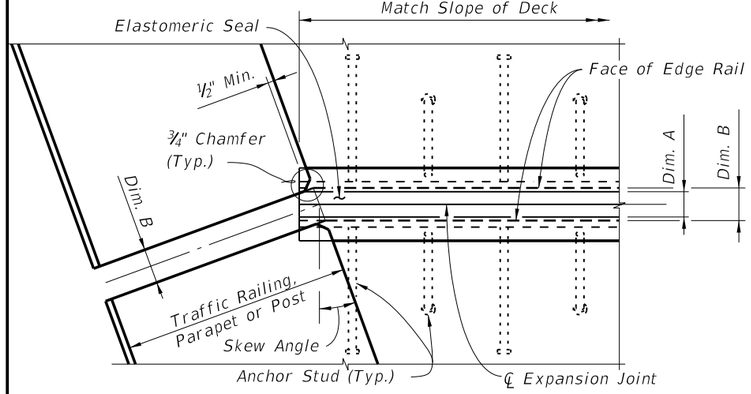

PARTIAL PLAN VIEW OF SKEWED JOINTS

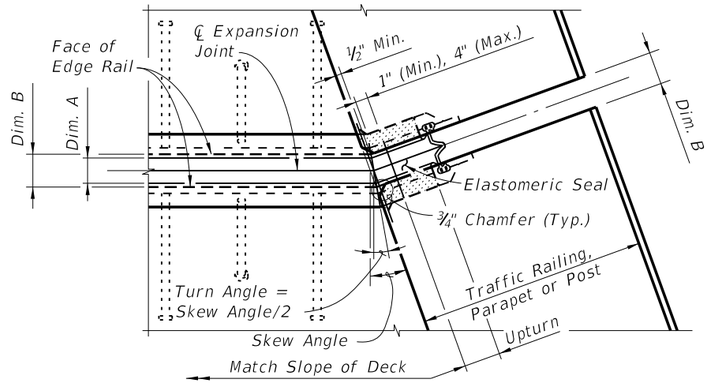

PARTIAL PLAN VIEW OF JOINTS SKEWED GREATER THAN 6°

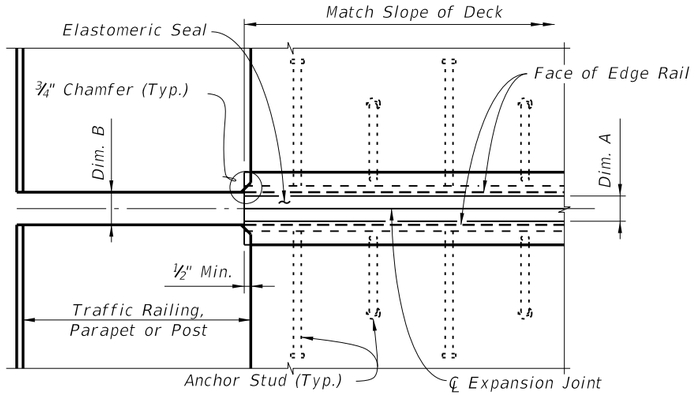

PARTIAL PLAN VIEW OF NONSKEWED JOINTS

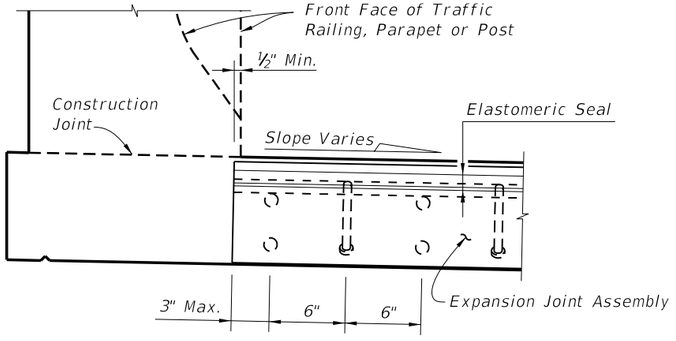

PARTIAL SECTION ALONG ℄ JOINT

JOINT TREATMENT AT HIGH SIDE OF DECK WITH SLOPE ≥ 2%
(Sidewalk Cover Plate where applicable not shown for clarity)

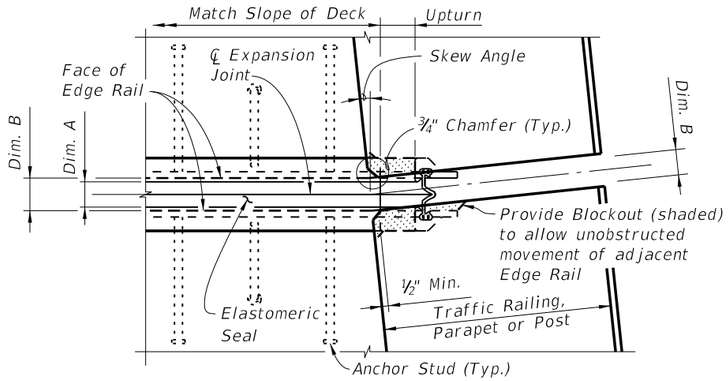

PARTIAL PLAN VIEW OF NONSKEWED JOINTS & JOINTS SKEWED 6° OR LESS

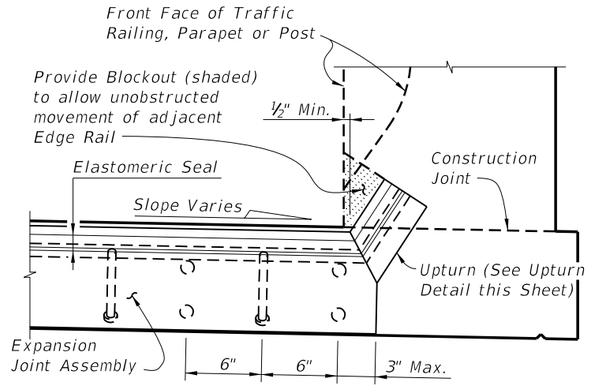

PARTIAL SECTION ALONG ℄ JOINT

JOINT TREATMENT AT LOW SIDE OF DECK & HIGH SIDE OF DECK WITH SLOPE < 2%
(Sidewalk Cover Plate where applicable not shown for clarity)

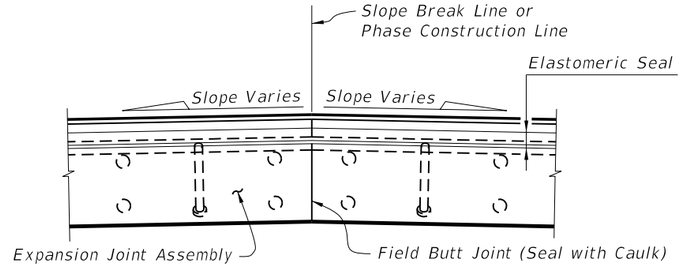

PARTIAL SECTION ALONG ℄ JOINT AT FIELD BUTT JOINT LOCATION (CROWNED DECK OR SLAB SHOWN)

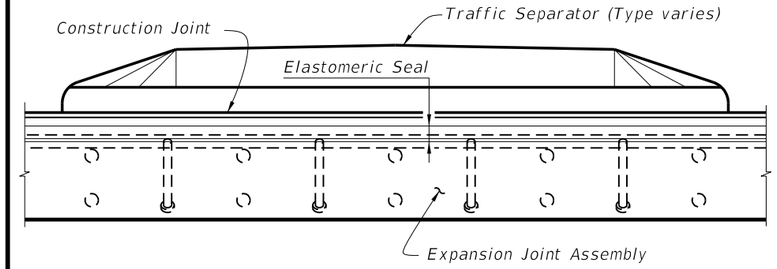

PARTIAL SECTION ALONG ℄ JOINT THRU TRAFFIC SEPARATOR

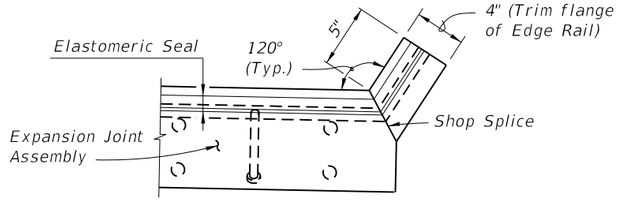

UPTURN DETAIL
(TYPICAL AT TRAFFIC BARRIERS AND PARAPETS)

C:\d\projects\standards\structures\2013book\21100-2of3.dgn
rd960rh
2:24:24 PM
6/28/2012

LAST REVISION	REVISION	DESCRIPTION:				
01/01/11			FDOT DESIGN STANDARDS 2013	STRIP SEAL EXPANSION JOINT	INDEX NO. 21100	SHEET NO. 2

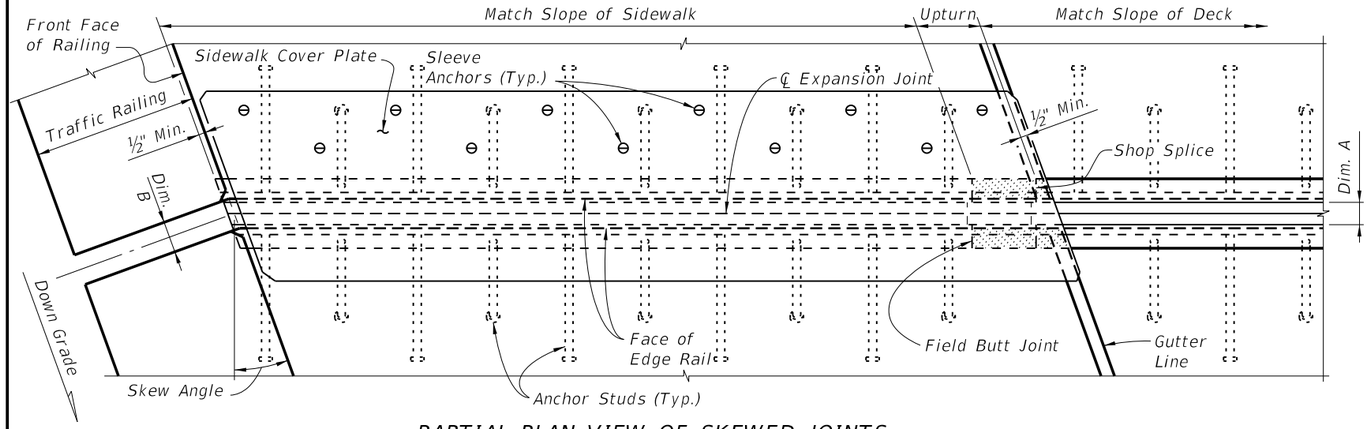

PARTIAL PLAN VIEW OF SKEWED JOINTS

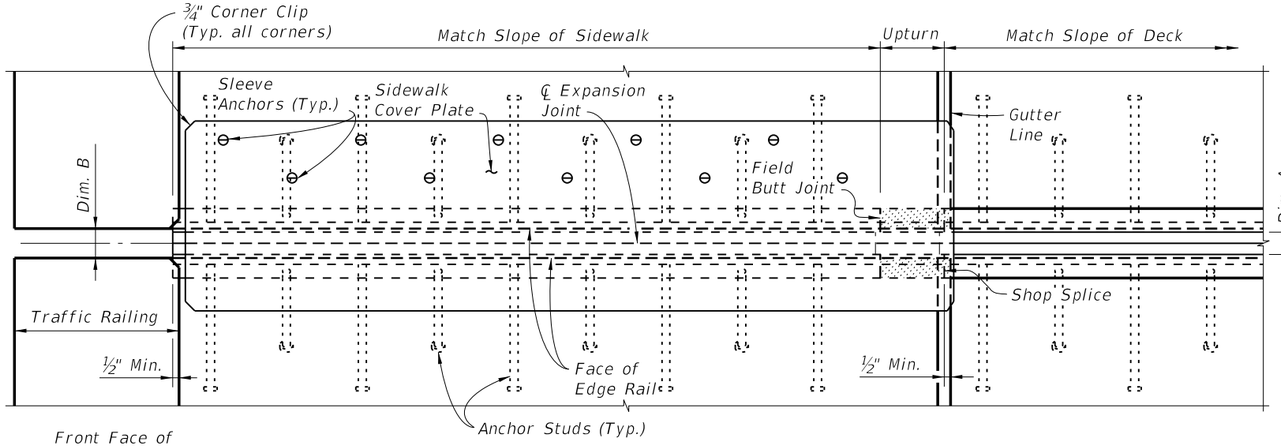

PARTIAL PLAN VIEW OF NONSKEWED JOINTS

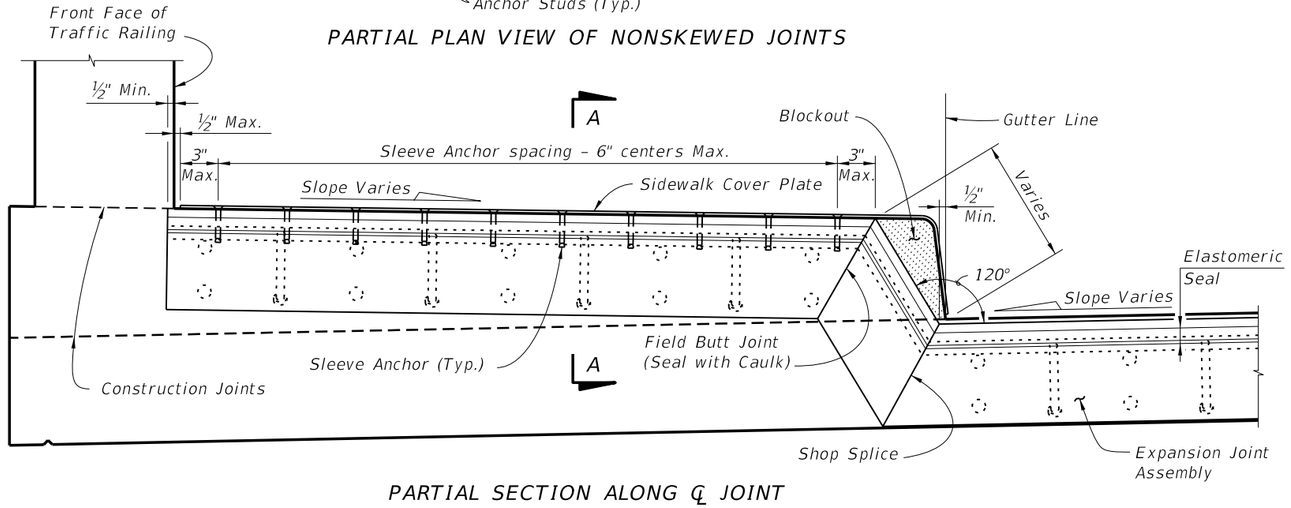

PARTIAL SECTION ALONG ℄ JOINT

RAISED SIDEWALK DETAIL

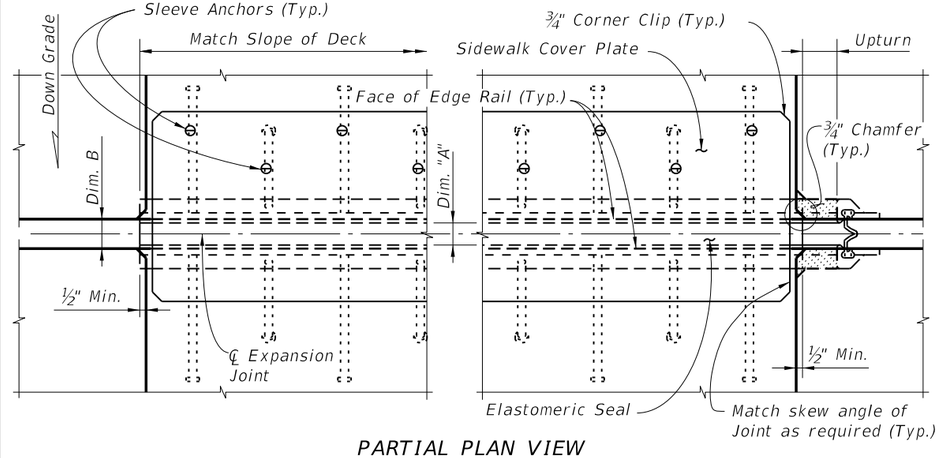

PARTIAL PLAN VIEW

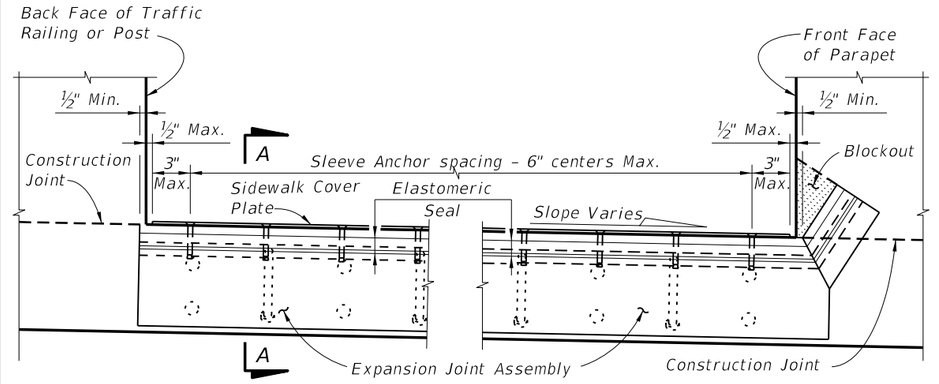

PARTIAL SECTION ALONG ℄ JOINT

FLUSH SIDEWALK DETAIL

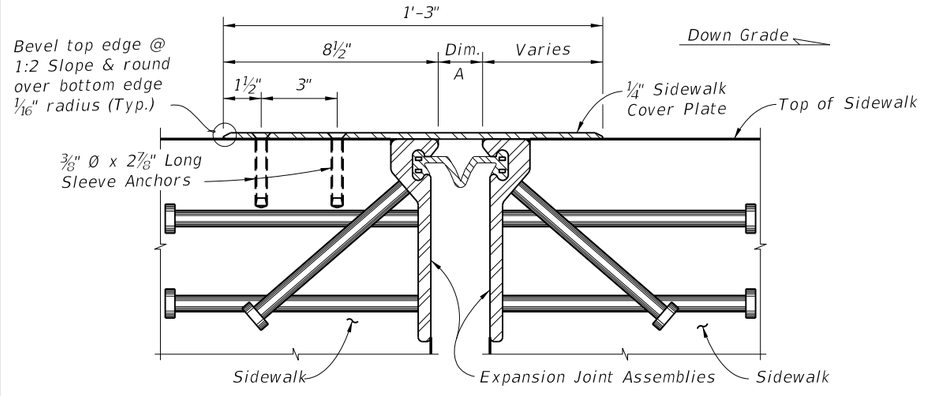

SECTION A-A

LAST REVISION 01/01/09 | REVISION | DESCRIPTION:

FDOT DESIGN STANDARDS 2013

STRIP SEAL EXPANSION JOINT

INDEX NO. 21100 | SHEET NO. 3

C:\d\projects\standards\structures\2013book\21100-3of3.dgn rd960rh 2:24:27 PM 6/28/2012

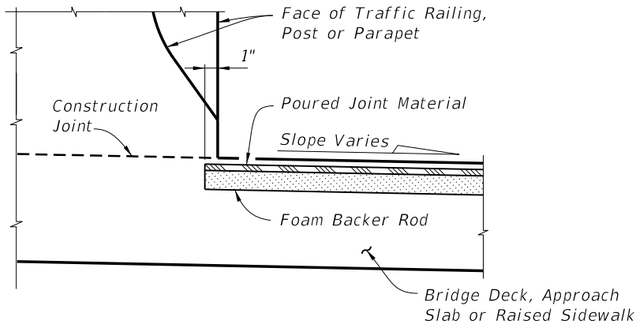

PARTIAL SECTION ALONG ℄ JOINT
JOINT TREATMENT AT HIGH SIDE OF
DECK WITH SLOPES 2% OR GREATER

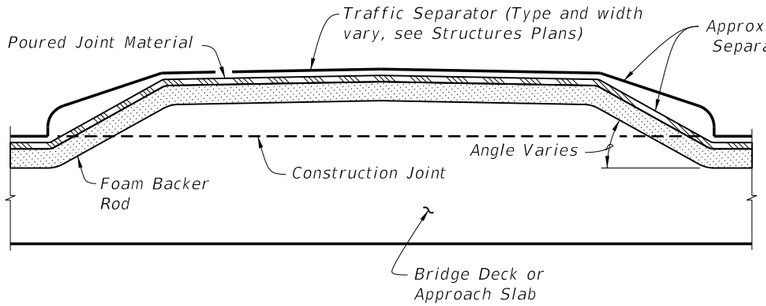

PARTIAL SECTION ALONG ℄ JOINT,
JOINT TREATMENT AT TRAFFIC SEPARATOR

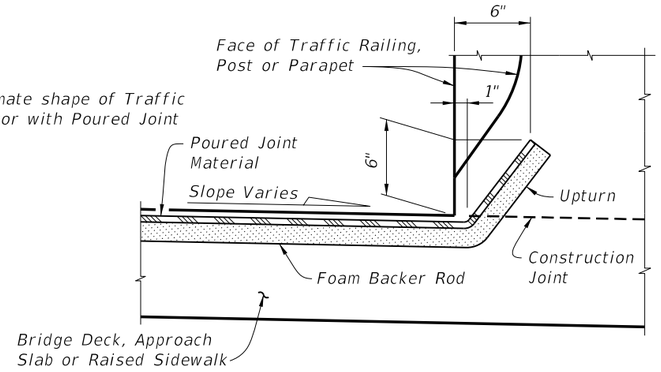

PARTIAL SECTION ALONG ℄ JOINT
JOINT TREATMENT AT LOW SIDE OF DECK OR
HIGH SIDE OF DECK WITH SLOPES < 2%

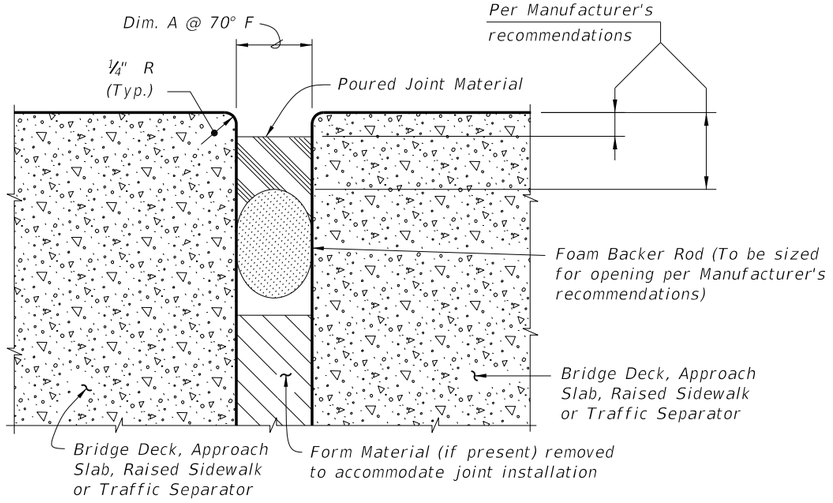

TYPICAL SECTION THRU JOINT

GENERAL NOTES:

1. Furnish Poured Joint With Backer Rod Expansion Joint Systems in accordance with Specification Section 458 and 932.
2. Submit shop drawings for Sidewalk Cover Plates showing all materials and project specific details and dimensions.
3. Refer to Specification Section 458 for installation and construction requirements.
4. Refer to the Structures Plans, Poured Expansion Joint Data Table for Dim. A @ 70° F.

C:\d\projects\standards\structures\2013book\21110-1of2.dgn
rd960rh
2:24:29 PM
6/28/2012

LAST REVISION	REVISION	DESCRIPTION:			INDEX NO.	SHEET NO.
01/01/11			FDOT DESIGN STANDARDS 2013	POURED JOINT WITH BACKER ROD EXPANSION JOINT SYSTEM	21110	1

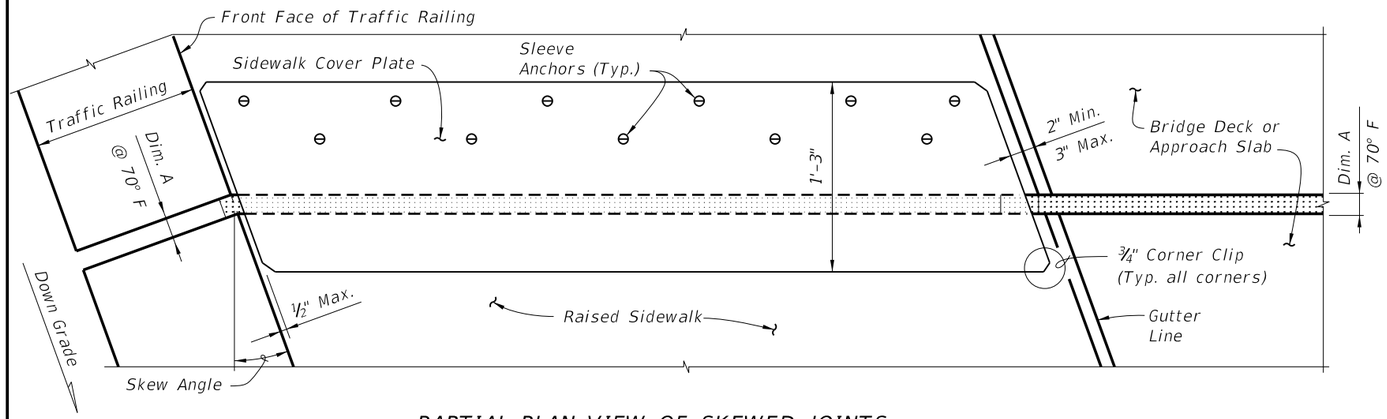

PARTIAL PLAN VIEW OF SKEWED JOINTS

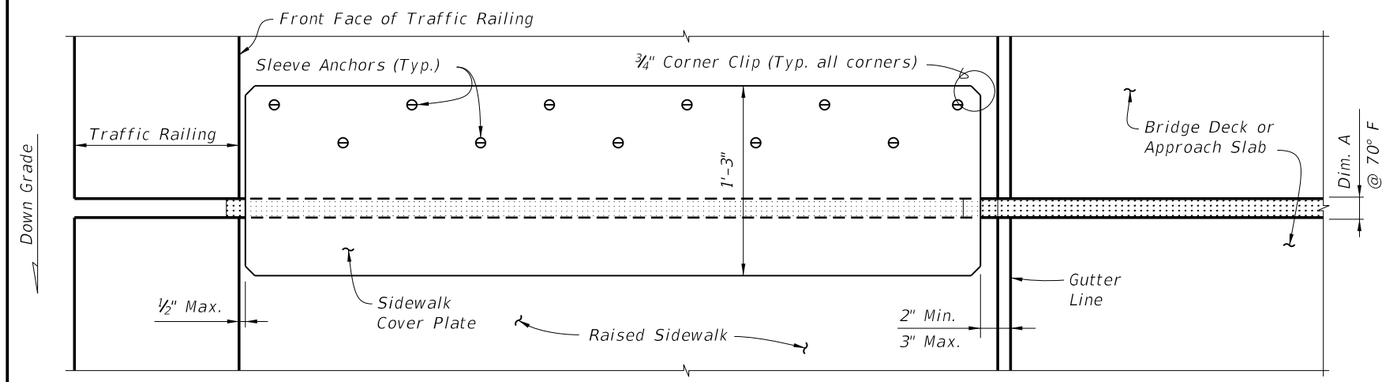

PARTIAL PLAN VIEW OF NON-SKEWED JOINTS

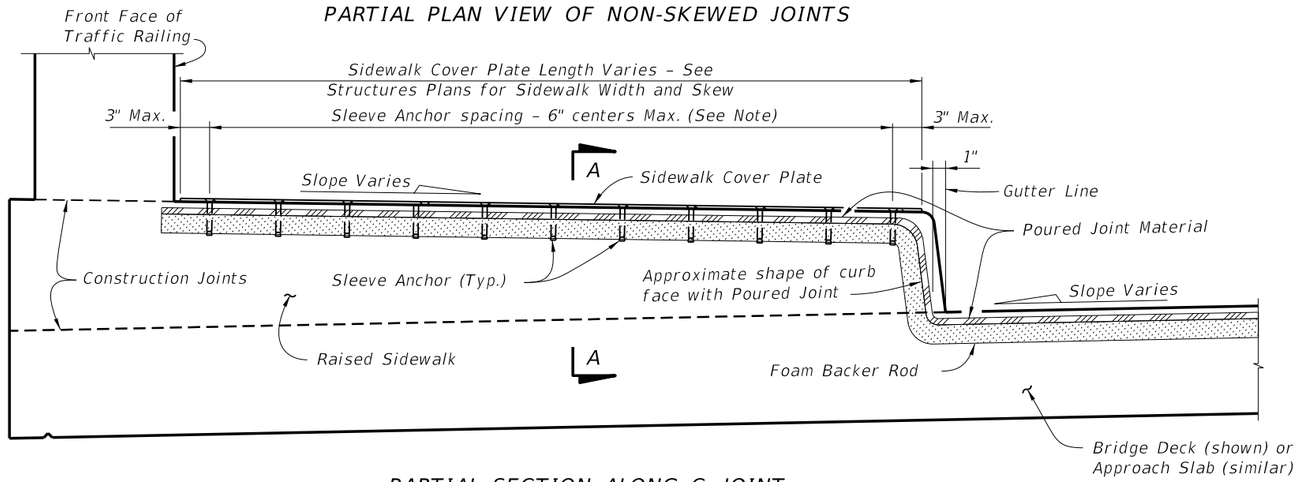

PARTIAL SECTION ALONG ℄ JOINT

RAISED SIDEWALK DETAIL

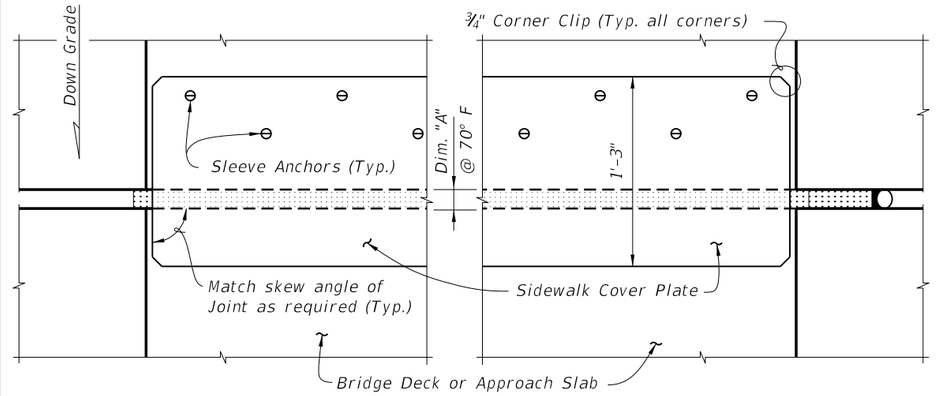

PARTIAL PLAN VIEW

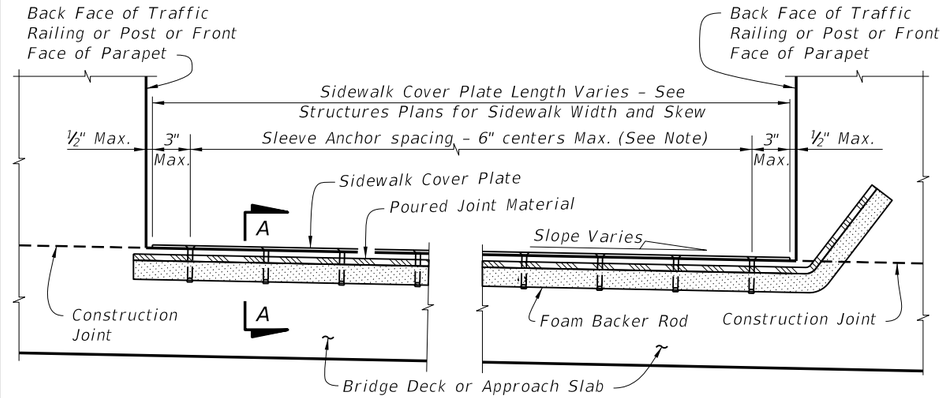

PARTIAL SECTION ALONG ℄ JOINT

FLUSH SIDEWALK DETAIL

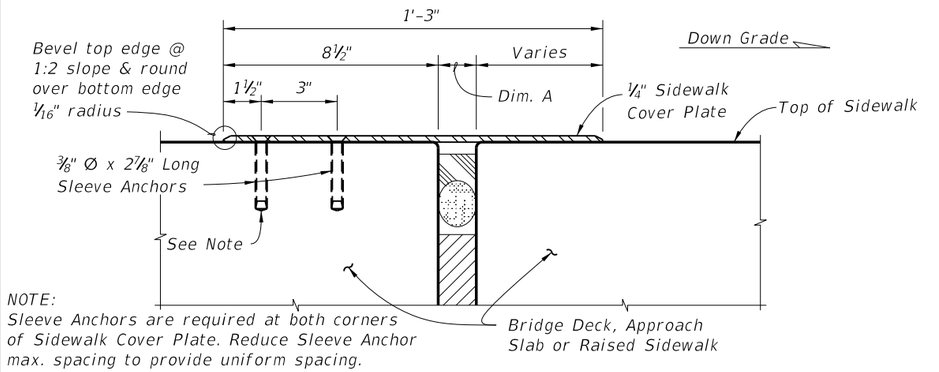

NOTE:
Sleeve Anchors are required at both corners of Sidewalk Cover Plate. Reduce Sleeve Anchor max. spacing to provide uniform spacing.

SECTION A-A

LAST REVISION	REVISION	DESCRIPTION:		FDOT DESIGN STANDARDS 2013	POURED JOINT WITH BACKER ROD EXPANSION JOINT SYSTEM	INDEX NO.	SHEET NO.
01/01/11						21110	2

6/28/2012 2:24:31 PM rd960rh C:\d\projects\standards\structures\2013book\21110-2of2.dgn

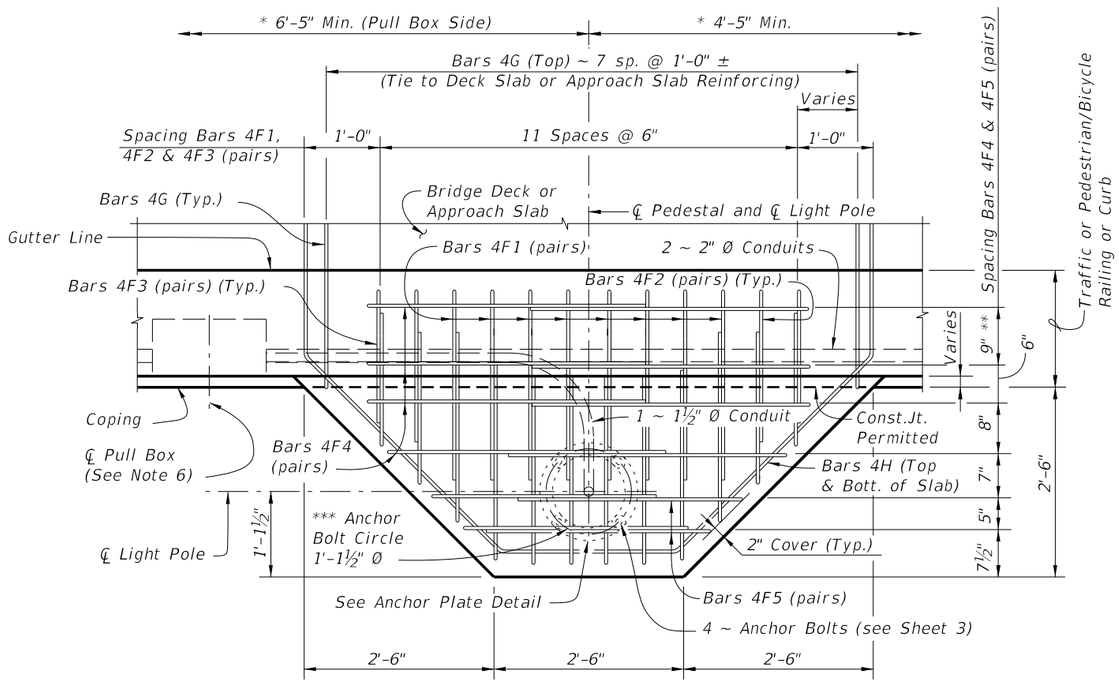

* Slip Forming Method of Construction requires the Engineer's approval within the limits shown.
** For Index No. 820 – Pedestrian/Bicycle Railing and concrete curb, this dimension is 3½". For raised sidewalks, this dimension is 1'-0" Max.
*** Anchor Bolt pattern orientation shall be as shown.

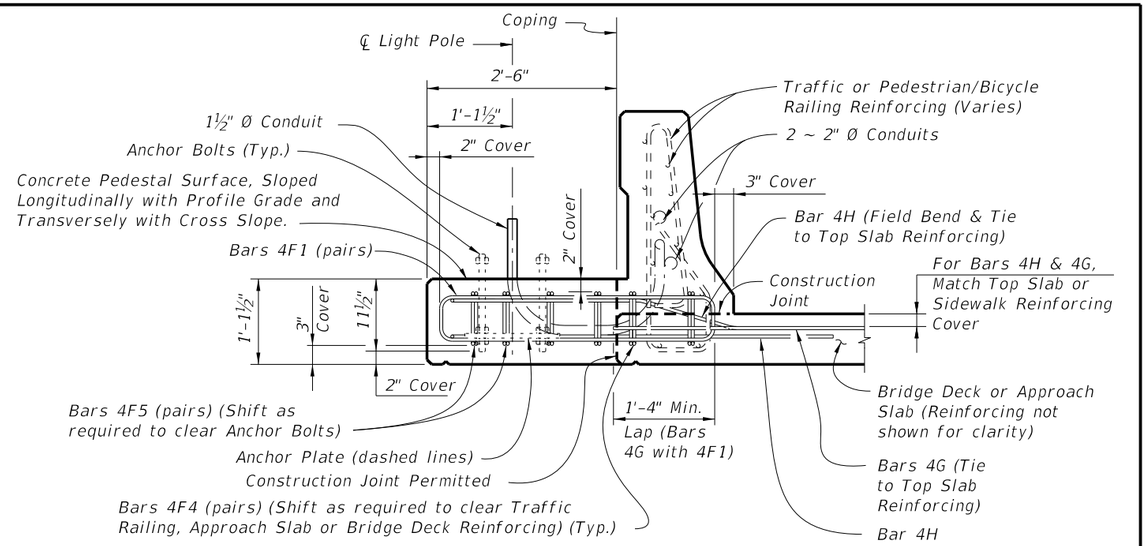

TYPICAL SECTION AT LIGHT POLE PEDESTAL FOR APPROACH SLAB OR BRIDGE DECK THICKNESS LESS THAN 1'-1½" AT COPING

PLAN VIEW

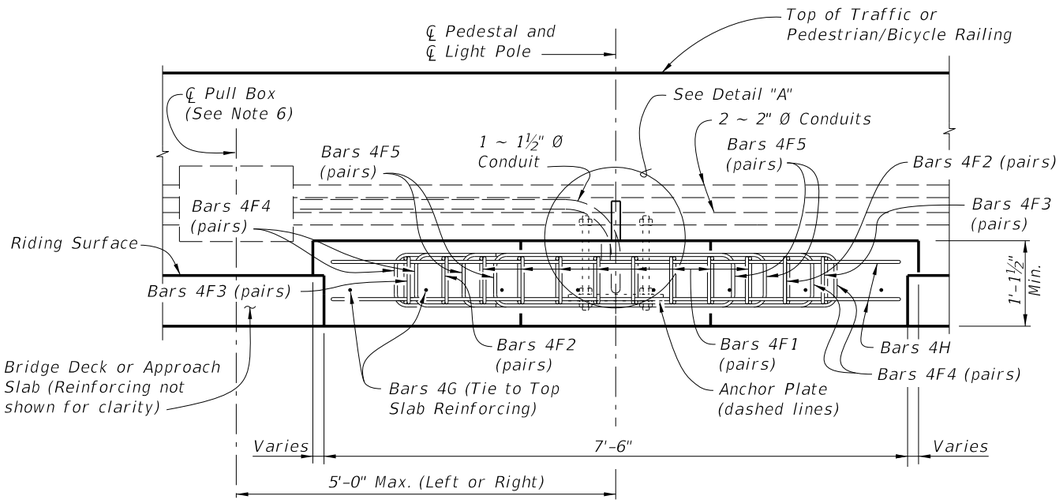

ELEVATION VIEW

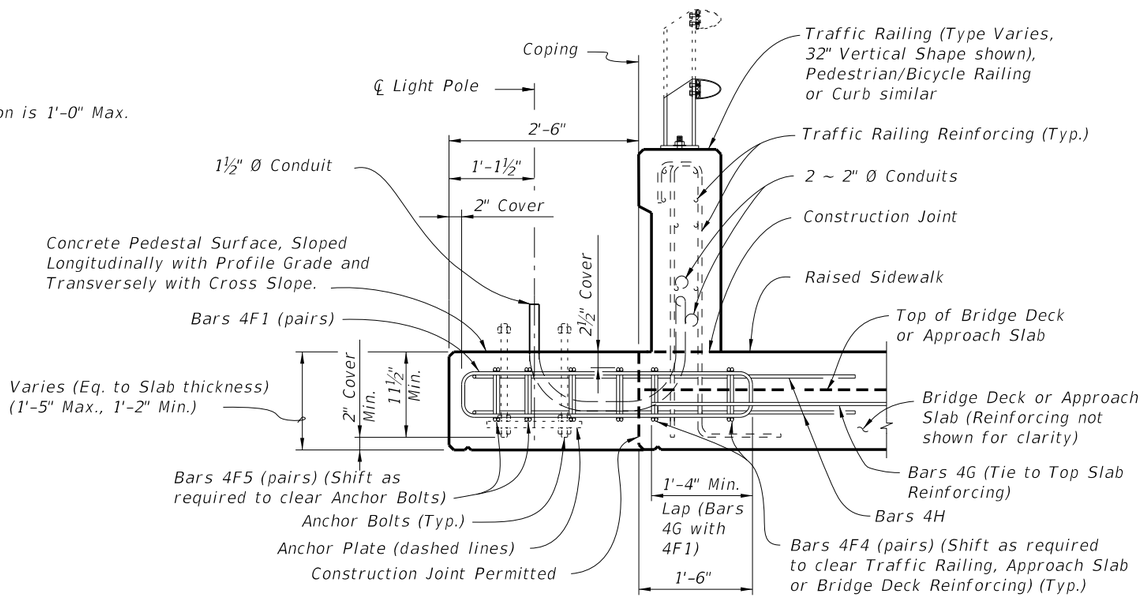

TYPICAL SECTION AT LIGHT POLE PEDESTAL FOR APPROACH SLAB OR BRIDGE THICKNESS LESS THAN 1'-5½" AT COPING

CROSS REFERENCE:
For Detail "A", Anchor Plate Detail and Light Pole Pedestal Notes, see Sheet 3.

NOTE: Anchor Bolt, Nuts, Washers and Anchor Plate are dashed for clarity.

LIGHT POLE PEDESTAL FOR APPROACH SLAB OR BRIDGE DECK THICKNESS LESS THAN 1'-5½" AT COPING

LAST REVISION	REVISION	DESCRIPTION:				
01/01/12			FDOT DESIGN STANDARDS 2013	LIGHT POLE PEDESTAL	INDEX NO. 21200	SHEET NO. 1

C:\d\projects\standards\structures\2013book\21200-1of3.dgn rd960rh 2:24:34 PM 6/28/2012

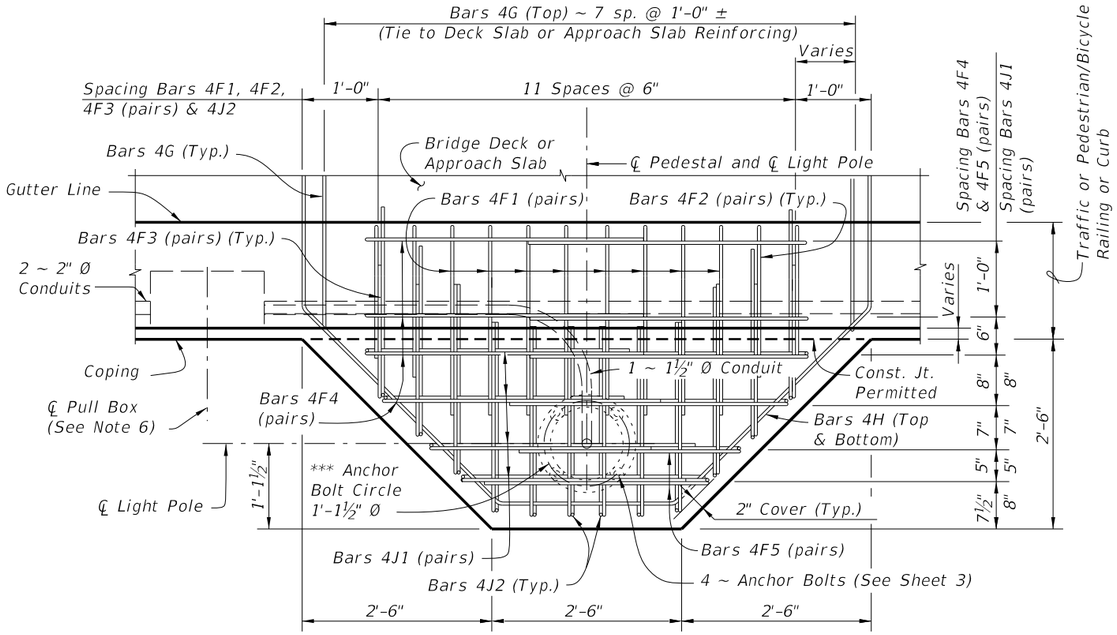

*** Anchor Bolt pattern orientation shall be as shown.

PLAN VIEW

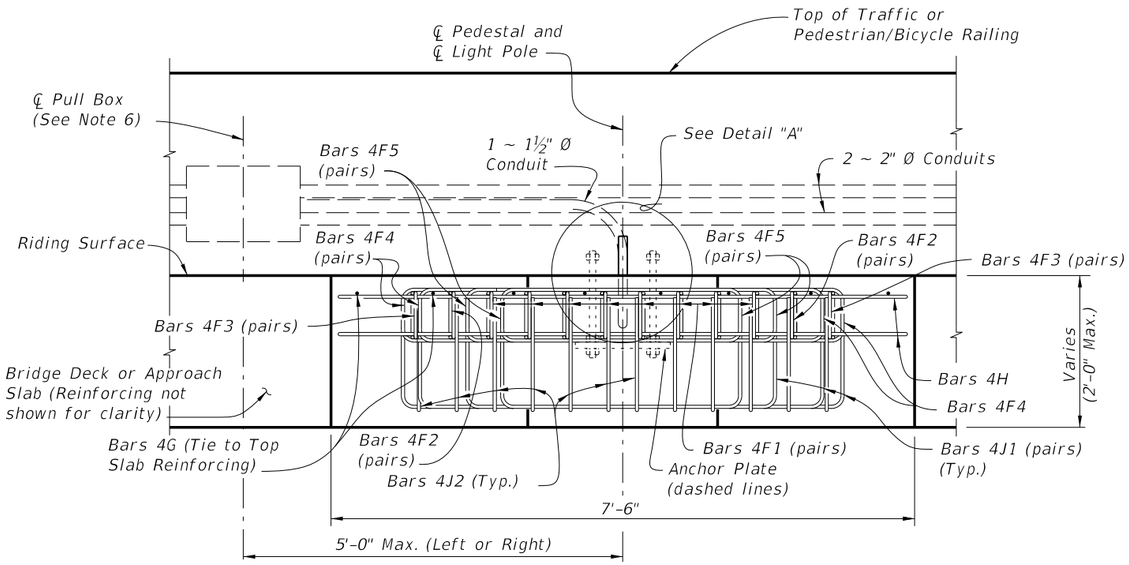

ELEVATION VIEW

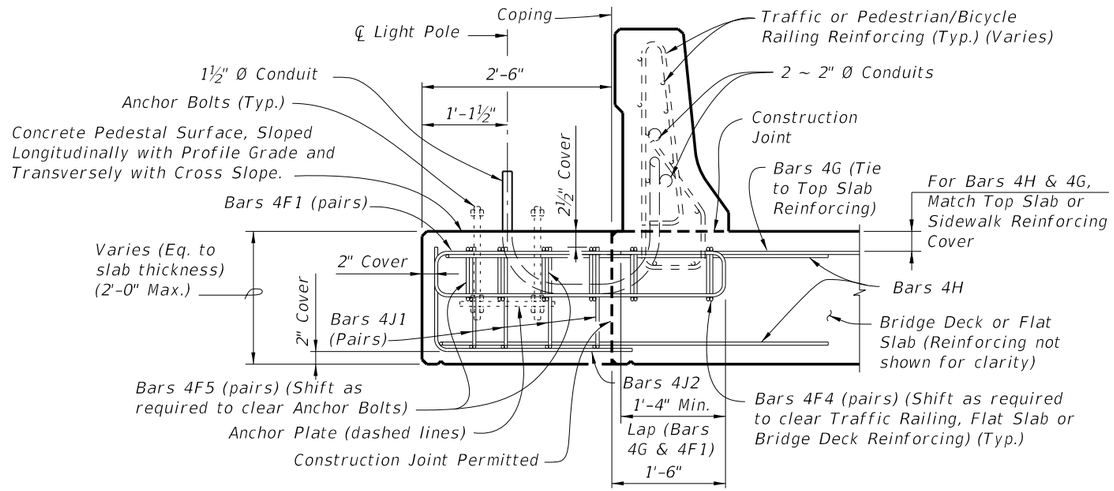

TYPICAL SECTION AT LIGHT POLE PEDESTAL FOR FLAT SLAB OR BRIDGE DECK THICKNESS AT COPING 1'-5½" OR GREATER

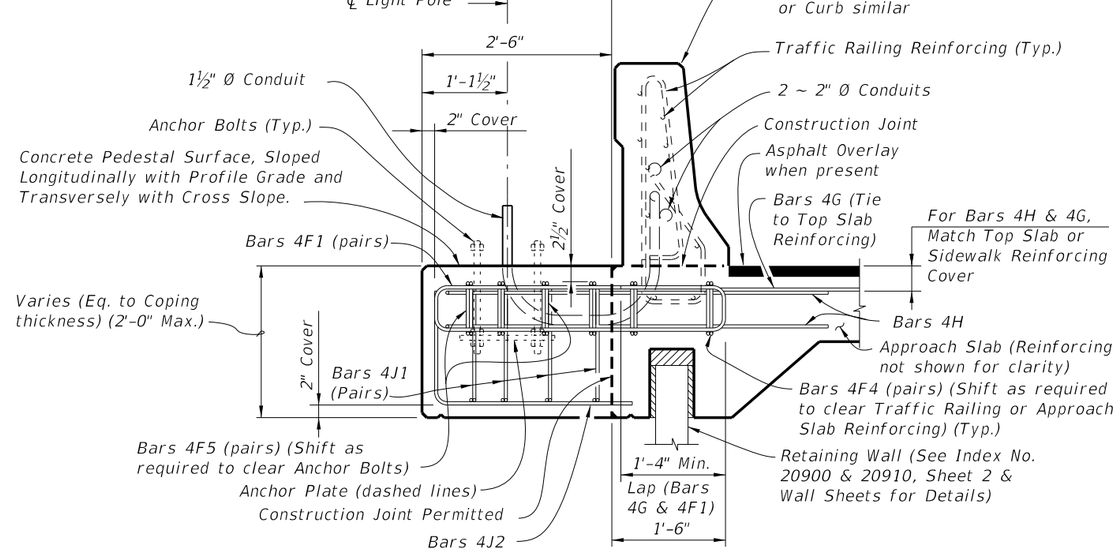

TYPICAL SECTION AT LIGHT POLE PEDESTAL FOR APPROACH SLAB ON RETAINING WALL

CROSS REFERENCE:
For Detail "A", Anchor Plate Detail and Light Pole Pedestal Notes, see Sheet 3.

NOTE: Anchor Bolt, Nuts, Washers and Anchor Plate are dashed for clarity.

LIGHT POLE PEDESTAL FOR APPROACH SLAB OR BRIDGE DECK THICKNESS AT COPING 1'-5½" OR GREATER

C:\d\projects\standards\structures\2013book\21200-2of3.dgn
rd960rh
2:24:37 PM
6/28/2012

LAST REVISION	REVISION	DESCRIPTION:			INDEX NO.	SHEET NO.
01/01/12			FDOT DESIGN STANDARDS 2013	LIGHT POLE PEDESTAL	21200	2

CONVENTIONAL REINFORCING STEEL BENDING DIAGRAMS

REINFORCING STEEL NOTES:

a. When Pedestal is attached to Pedestrian/Bicycle Railing – Index No. 820 or an 8" wide concrete curb and the Bridge Deck or Approach Slab thickness is less than 1'–1½", Bars 4F3 shall have leg length and bar length shown in parentheses.

b. The number of bars shown in parentheses is for Bars 4F4 when Pedestal is attached to Pedestrian/Bicycle Railing – Index No. 820 or an 8" wide concrete curb, and the Bridge Deck or Approach Slab thickness is less than 1'–1½".

c. Lap Splices for Bars 4F1, 4F2 & 4F3 shall be a minimum of 1'–4". Lap Splices for Bars 4F4 & 4F5 shall be minimum of 1'–8".

d. Bars 4J1 and 4J2 are not required when Pedestal thickness is less than 1'–5½". Field trim height of bars to maintain cover when Pedestal thickness is less than 2'–0". Field trim length of Bars 4J2 on Retaining Wall Coping to maintain cover.

e. All bar dimensions in the bending diagrams are out to out.

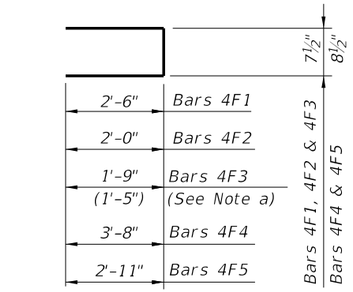

BARS 4F1, 4F2, 4F3, 4F4 & 4F5

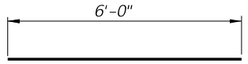

BAR 4G

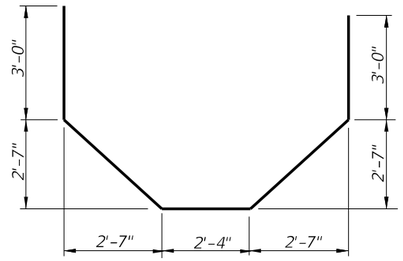

BAR 4H

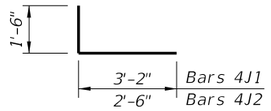

BARS 4J1 & 4J2

BILL OF REINFORCING STEEL

MARK	SIZE	NO. REQD.	LENGTH	NOTES
F1	4	16	5'–8"	c
F2	4	4	4'–8"	c
F3	4	4	4'–2" (3'–6")	a, c
F4	4	8 (6)	8'–3"	b, c
F5	4	4	6'–7"	c
G	4	8	6'–0"	–
H	4	2	15'–8"	–
J1	4	8	4'–8"	d
J2	4	12	4'–0"	d

( ) See Reinforcing Steel Note a & b.

ANCHOR PLATE DETAIL

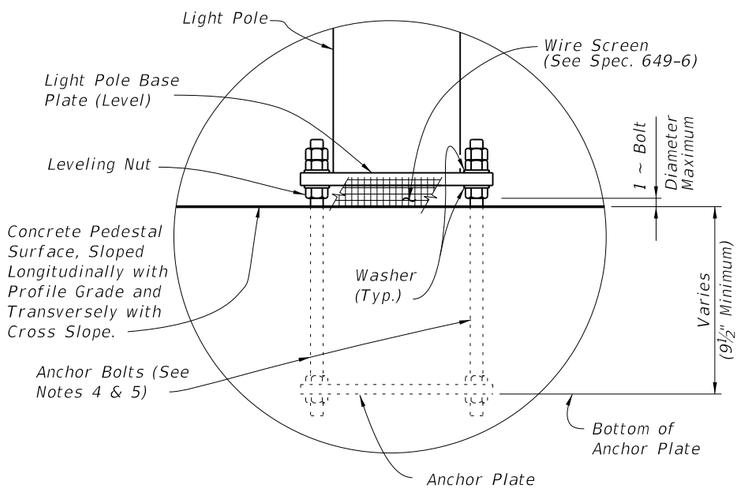

DETAIL "A"

CROSS REFERENCE:
For location of Detail "A" see Sheets 1 and 2.

LIGHT POLE PEDESTAL NOTES

1. Concrete and Reinforcing Steel required for the construction of the Pedestal shall meet the same requirements as the Traffic Railing or Pedestrian/Bicycle Railing the Pedestal is attached to.

2. Light Pole Pedestal may be used with the following:
   Index No. 420 – Traffic Railing (32" F Shape),
   Index No. 422 – Traffic Railing (42" Vertical Shape),
   Index No. 423 – Traffic Railing (32" Vertical Shape),
   Index No. 424 – Traffic Railing (Corral Shape),
   Index No. 425 – Traffic Railing (42" F Shape),
   Index No. 820 – Pedestrian/Bicycle Railing,
   Index No. 821 – Aluminum Pedestrian/Bicycle Bullet Railing for Traffic Railing (32" F Shape), or
   Index No. 5210 – Traffic Railing /Sound Barrier (Bridge).
   Unless otherwise noted, Traffic Railing (32" F Shape) is shown in all Views and Sections. The Pedestal details for other Traffic Railings or Pedestrian/Bicycle Railing are similar.

3. The Pedestal and Deck are designed to resist the following Working Loads (Load Case 2) from the Light Pole applied at the top of the Pedestal:

Axial Dead Load	=	1.56 kip
Wind Load Moment about Transverse Axis	=	40.60 kip–Ft.
Wind Load Moment about Longitudinal Axis	=	28.30 kip–Ft.
Deadload Moment about Longitudinal Axis	=	1.69 kip–Ft.
Maximum Shear	=	1.38 kip
Torsion about Pole Axis	=	3.56 kip–Ft.

TABLE 1 - DESIGN LIMITATIONS FOR ANCHOR BOLTS (LOAD CASE 1)

WIND SPEED (MPH)	ARM LENGTH (Ft.)	BRIDGE DECK HEIGHT (Ft.)* DESIGN MOUNTING HEIGHT 40 Ft.	45 Ft.	50 Ft.
110	≤ 15	75	75	75
130	8 & 10	75	75	75
130	12	75	75	70
130	15	75	75	40
150	8	75	75	10
150	10	75	50	**
150	12	75	45	**
150	15	75	30	**

* Above natural ground or MLW. ** See Load Case 2.

4. ANCHOR BOLT DESIGN:
   Anchor Bolt design is based on the standard Roadway Aluminum Light Pole configurations shown on Index No. 17515 and the following design limitations:
   Load Case 1: See Table 1
   Load Case 2: 150 mph Design Wind Speed, 15' arm length, 50' Design Mounting Height with a 75' bridge deck height above natural ground, or MLW.

   Anchor Bolt Diameter: 1" Ø (Load Case 1), 1 ¼" Ø (Load Case 2).
   Anchor Bolts: ASTM F1554 Grade 55.
   Nuts: ASTM A563 Grade A, Heavy–Hex.
   Washers: ASTM F436 Type 1.
   Anchor Plate: ASTM A709 (Grade 36) or ASTM A36.
   All Nuts, Bolts and Washes shall be galvanized by ASTM F2329.

   The Contractor is responsible for ensuring the anchor bolt configuation is compatible with the light pole base plate. Submit modifications of the anchor bolt design to the Engineer for approval.

5. Anchor Bolts must be installed plumb.

6. For Conduit, Pull Box, Expansion/Deflection Fitting and adjacent Reinforcing Steel Details, see Utility Conduit Detail Sheets.

7. PAYMENT: The cost of Wire Screen, Anchor Bolts, Nuts, Washers and Anchor Plates shall be included in the Bid Price for Light Poles. The cost of all Labor, Concrete and Reinforcing Steel required for the Construction of the Pedestals, Pull Boxes, and Miscellaneous Hardware required for the completion of the Electrical System, shall be included in the Bid Price for the Traffic Railing or Pedestrian/Bicycle Railing the Pedestal is attached to.

ESTIMATED LIGHT POLE PEDESTAL QUANTITIES PER LIGHT POLE PEDESTAL

ITEM	UNIT	QUANTITY
Concrete Per Pedestal Thickness	CY/In.	0.040
Reinforcing Steel	LB	195 (182)

(The Reinforcing Steel quantity shown in parenthesis is for a Pedestal attached to Pedestrian/Bicycle Railing – Index No. 820 with Bridge Deck or Approach Slab thinner than 1'–1½". Add 59 Lbs. for Bars 4J1 & 4J2 when Pedestal Thickness is greater than 1'–5")

C:\fdot\projects\standards\structures\2013book\21200-3of3.dgn
rd960rh
2:24:39 PM
6/28/2012

LAST REVISION	REVISION	DESCRIPTION:			INDEX NO.	SHEET NO.
01/01/12			FDOT DESIGN STANDARDS 2013	LIGHT POLE PEDESTAL	21200	3

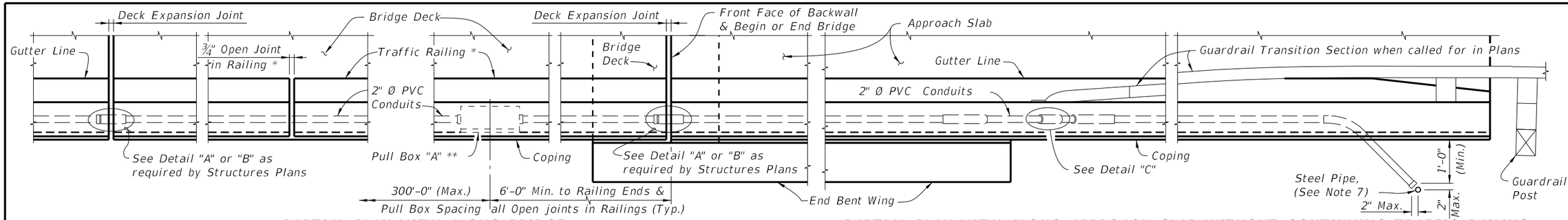

PARTIAL PLAN VIEW ALONG BRIDGE

PARTIAL PLAN VIEW ALONG APPROACH SLAB WITHOUT CONTINUING TRAFFIC RAILING

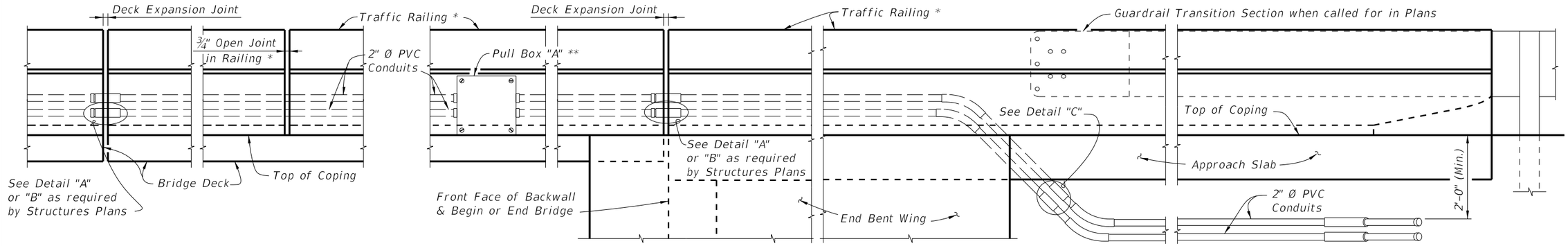

PARTIAL ELEVATION VIEW ALONG BRIDGE

PARTIAL ELEVATION VIEW ALONG APPROACH SLAB WITHOUT CONTINUING TRAFFIC RAILING

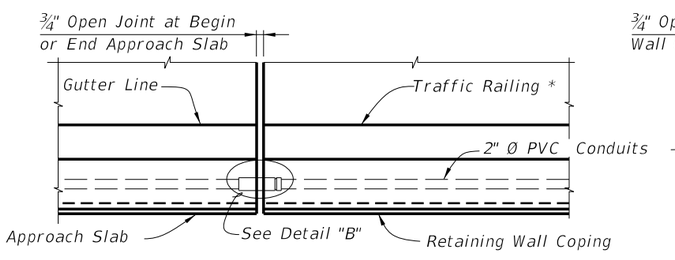

PARTIAL PLAN VIEW ALONG APPROACH SLAB WITH CONTINUING TRAFFIC RAILING

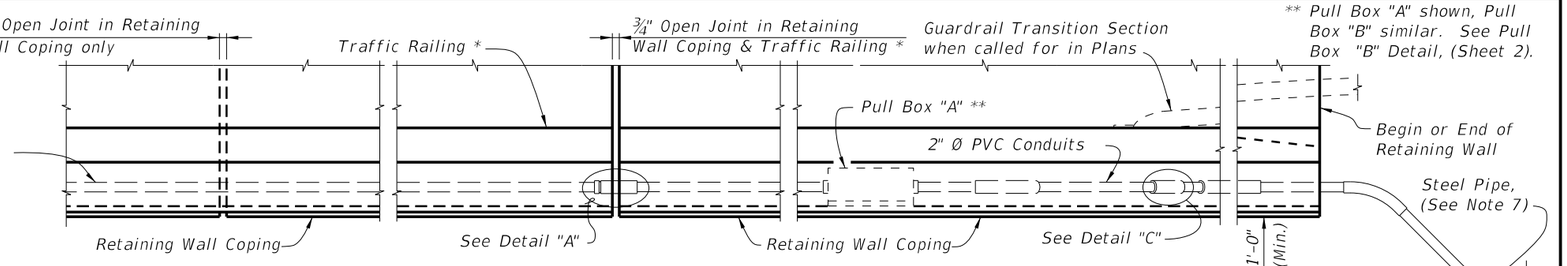

PARTIAL PLAN VIEW ALONG RETAINING WALL

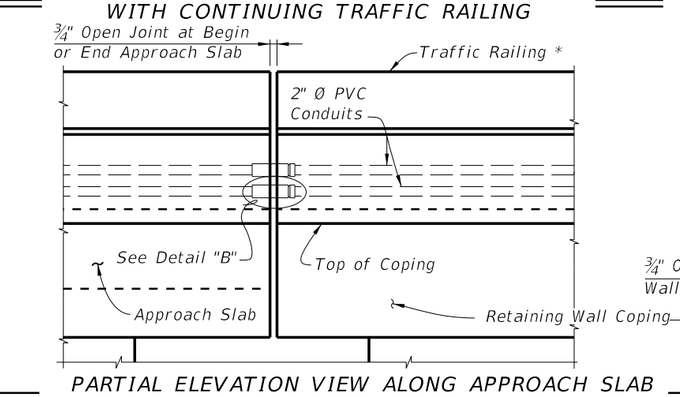

PARTIAL ELEVATION VIEW ALONG APPROACH SLAB WITH CONTINUING TRAFFIC RAILING

(Retaining Wall Mounted Traffic Railing shown, Roadway Concrete Barrier similar)

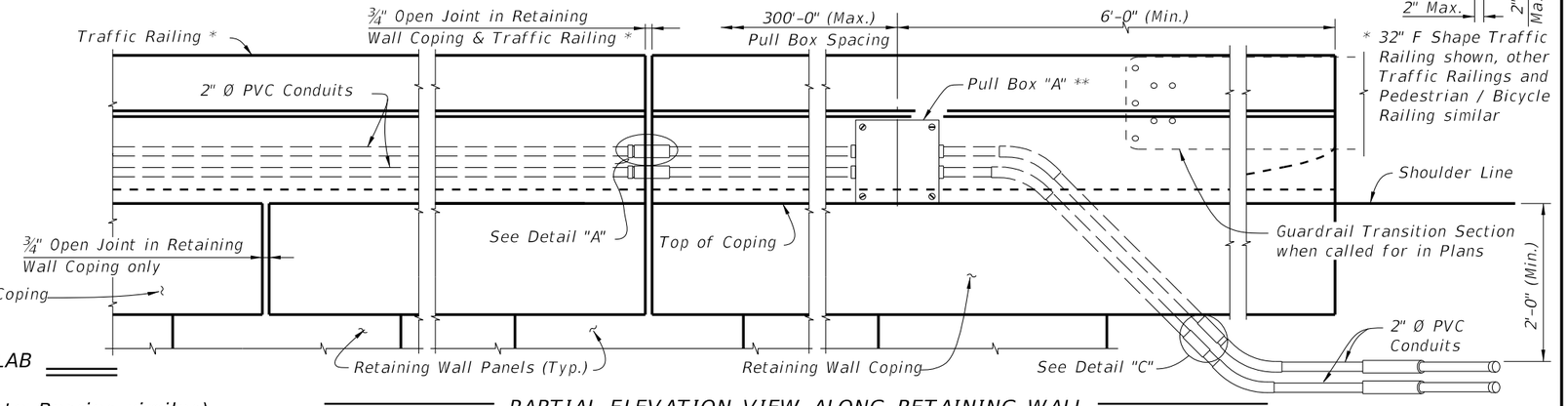

PARTIAL ELEVATION VIEW ALONG RETAINING WALL

LAST REVISION	REVISION	DESCRIPTION:		FDOT DESIGN STANDARDS 2013	CONDUIT DETAILS	INDEX NO.	SHEET NO.
01/01/12						21210	1

C:\d\projects\standards\structures\2013book\21210-1of2.dgn rd960rh 2:24:42 PM 6/28/2012

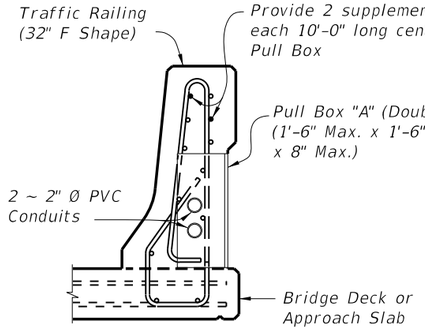

SECTION THRU TRAFFIC RAILING AT PULL BOX (32" F SHAPE SHOWN, 42" F SHAPE SIMILAR)

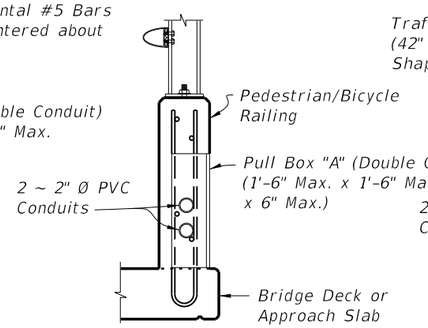

SECTION THRU PEDESTRIAN / BICYCLE RAILING AT PULL BOX

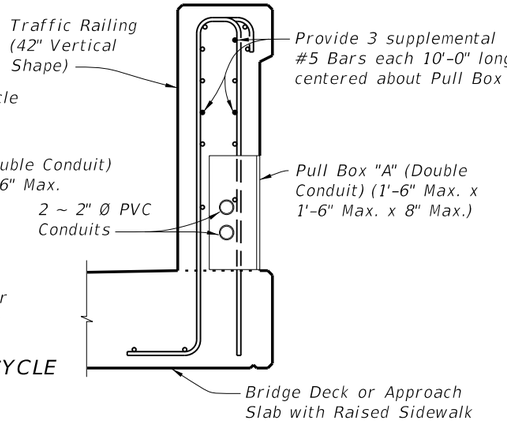

SECTION THRU TRAFFIC RAILING AT PULL BOX (42" VERTICAL SHAPE SHOWN, 32" VERTICAL SHAPE SIMILAR)

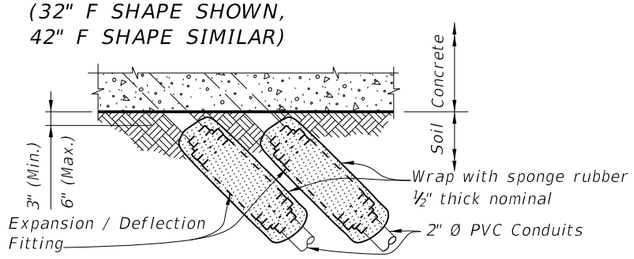

DETAIL "C" EXPANSION / DEFLECTION FITTING DETAIL (CONCRETE / SOIL)

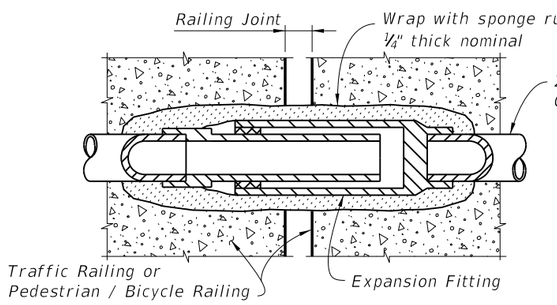

DETAIL "A" EXPANSION FITTING DETAIL

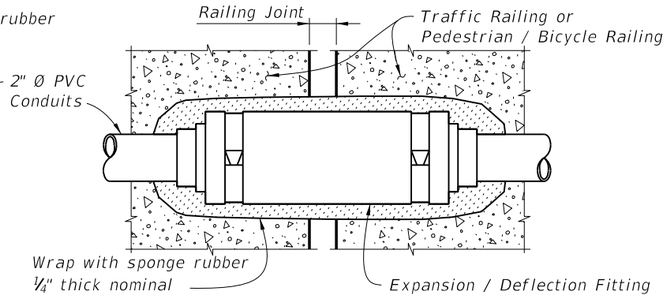

DETAIL "B" EXPANSION / DEFLECTION FITTING DETAIL (CONCRETE / CONCRETE)

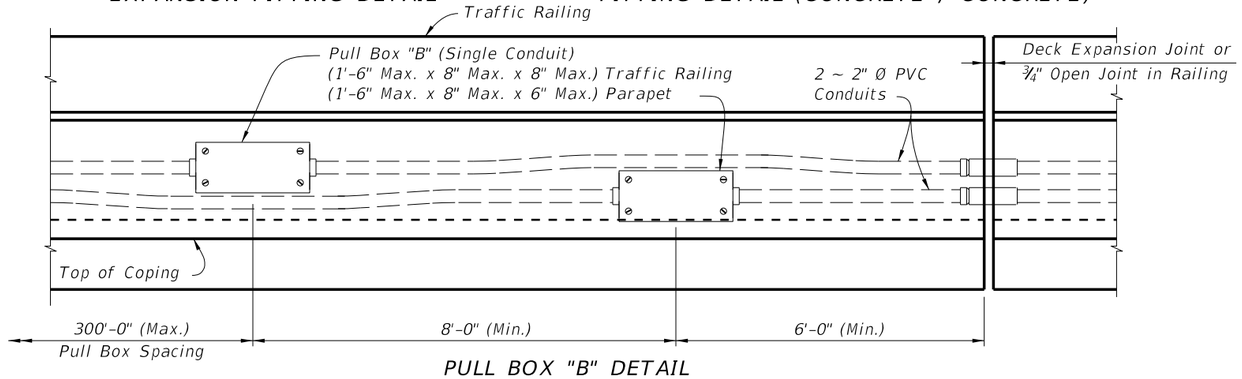

PULL BOX "B" DETAIL

CONDUIT GENERAL NOTES:

1. Furnish and install approved Conduits and Fittings in accordance with the Specifications, this Standard, and the National Electric Code (NEC) and as directed by the Engineer.

2. Furnish Schedule 80 PVC Rigid Nonmetallic Conduits in accordance with NEMA TC-2 and UL Standard 651. Furnish Fittings in accordance with NEMA TC-3 and UL Standard 514b. Conduit and Fittings must have UL labels: Conduit – on each 10-foot length; Fittings – stamped or molded on each Fitting. Connect Conduit and Fittings using solvent cement in accordance with the manufacturer's recommendations.

3. Furnish and install Pull Boxes sized in accordance with NEC requirements and the maximum size limits shown. For locations where the superstructure environment is classified as slightly or moderately aggressive, furnish Galvanized Steel or NEMA Type 4X Pull Boxes. Where the superstructure environment is classified as extremely aggressive, furnish NEMA Type 4X non-metallic Pull Boxes. All Pull Boxes shall include weatherproof covers with gaskets. Permanently indicate the utility within the Pull Box by stamping or molding the information using letters and symbols that are a minimum of ½" high. Install Pull Boxes adjacent to the Begin and End of Bridges, Begin and End of Retaining Walls, and at other required locations. Omit Pull Boxes at Begin or End of Retaining Walls adjacent to Bridges unless a precast Traffic Railing with junction slab is used. Position Pull Boxes as shown; do not place Pull Box openings on the traffic face of Traffic Railings.

4. Furnish and install Expansion Fittings at locations shown in the Plans. Certify that Expansion Fittings used at a given location are rated to accommodate the anticipated movement at that location: along Bridge decks – see Structures Plans, Expansion Joint Data Table; along Retaining Walls and other unspecified locations – 2" minimum.

5. Furnish and install Expansion/Deflection Fittings at locations shown in the Plans. Certify that Expansion/Deflection Fittings used at a given location are rated to accommodate a minimum rotation of 30 degrees and the anticipated movement at that location: along Bridge decks– see Structures Plans, Expansion Joint Data Table; along Retaining Walls and other unspecified locations – 0.7" minimum.

6. For all Conduit designated for future use, install, and leave in place, #12 AWG Pull Wire along the entire length of Conduit or #12 AWG Pull Wire on each End (from Traffic Railing Pull Box to in-ground Pull Box or capped End) of the Conduit with a polypropylene cord between Bridge Traffic Railing Pull Boxes in accordance with Section 630.

7. Stub out and cap the Conduit, and drive a steel pipe at the End of the Conduit as shown in this Standard. If required in the plans or by the Engineer, furnish and install in-ground Pull Boxes in accordance with Index 17700. Show location of stub out with Steel Pipe or in-ground Pull Box on As-Built plans.

8. Shift vertical Railing reinforcement symmetrically to provide 2" clearance to Pull Boxes. Space shifted vertical reinforcement at 3" centers minimum. Cut horizontal Railing reinforcement to provide 2" clearance to Pull Boxes and provide supplemental reinforcement as shown. Shift a maximum of 1" but do not cut Railing reinforcement to facilitate Conduit, Expansion Fitting and Expansion/Deflection Fitting placement. Do not bundle Conduits, or Conduits and horizontal reinforcement.

9. Unless otherwise shown in the plans, include the cost of furnishing and installing Conduit, Pull Cords and Wires, Pull Boxes, Expansion and Expansion/Deflection Fittings and all associated hardware required to complete the installation in the cost of the Traffic Railing or Pedestrian Railing (Parapet) that the Conduit is installed in.

C:\d\projects\standards\structures\2013book\21210-2of2.dgn
rd960rh
2:24:45 PM
6/28/2012

LAST REVISION	REVISION	DESCRIPTION:				
07/01/12			FDOT DESIGN STANDARDS 2013	CONDUIT DETAILS	INDEX NO. 21210	SHEET NO. 2

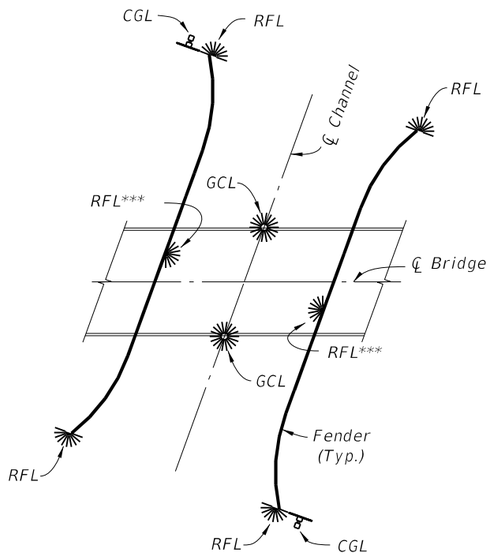

NAVIGATION LIGHT SYSTEM SCHEMATIC
FOR SINGLE BRIDGE WITH FENDERS

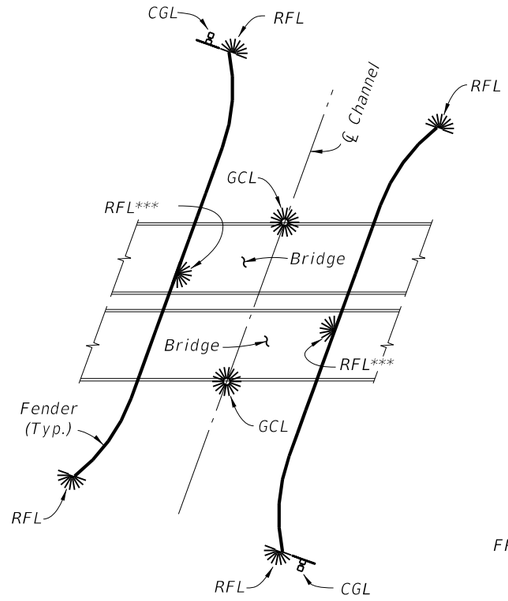

NAVIGATION LIGHT SYSTEM SCHEMATIC
FOR DUAL BRIDGES WITH FENDERS

NAVIGATION LIGHT NOTES:

1. *Provide Navigation Light System in compliance with Specifications Section 510.*

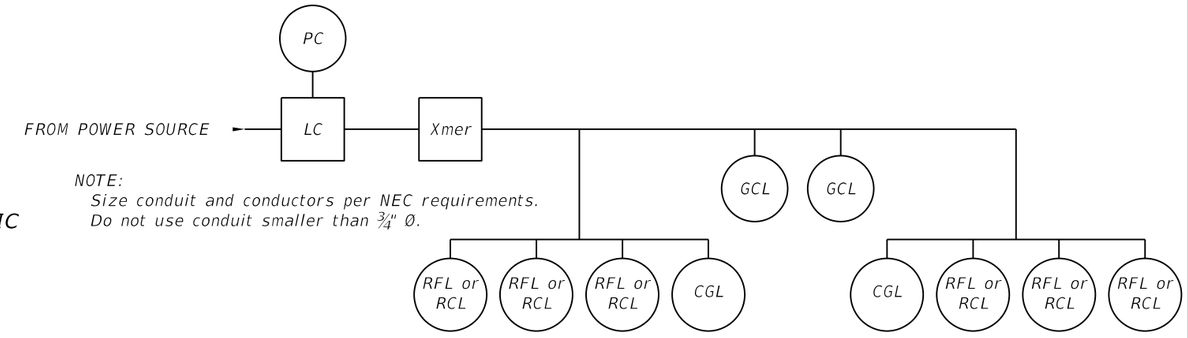

TYPICAL ELECTRICAL SCHEMATIC DIAGRAM

NOTE:
Size conduit and conductors per NEC requirements.
Do not use conduit smaller than $\frac{3}{4}$" Ø.

POWER CONDUCTORS			
DISTANCE (feet)	VOLTS	CONDUCTOR	TRANSFORMER
0 – 75	120	#12 AWG	N/A
75 – 500	120 or 240	#10 AWG	N/A
500–1000	240	#10 AWG	N/A
1000–2000	480	#10 AWG	2 KVA
2000–5000	480	#8 AWG	2 KVA
5000–10000	480	#6 AWG	2 KVA
over 10000	480	#4 AWG	2 KVA

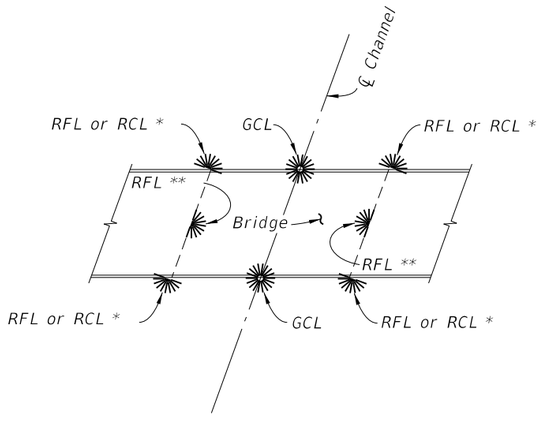

NAVIGATION LIGHT SYSTEM SCHEMATIC
FOR SINGLE BRIDGE WITHOUT FENDERS

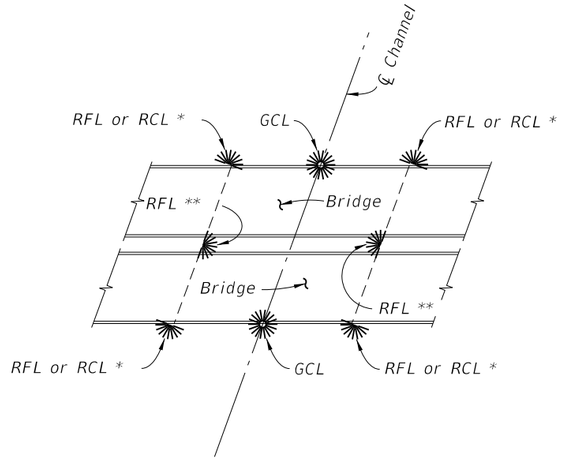

NAVIGATION LIGHT SYSTEM SCHEMATIC
FOR DUAL BRIDGES WITHOUT FENDERS

LEGEND

SYMBOL		DESCRIPTION
	LC	Lighting Contactor
	PC	Photocell Control
	Xmer	Transformer (If Required)
	RFL or RCL	Red Pier/Fender Light (180° visibility) Red Channel Margin Light (180° visibility)
	GCL	Green Center Channel Light (360° visibility)
	CGL	Clearance Gauge Light
	CM	Channel Margin or Pier inner surface whichever defines Channel Edge.

* Use RFL when Pier is at Channel Edge and see CFR, Title 33, part 118 for Mounting Height restrictions. Use RCL otherwise.
** Mounted only on the Pier that defines CM, otherwise does not apply.
*** RFL to be located at mid length of straight portion of fender.

C:\d\projects\standards\structures\2013book\21220-1of2.dgn
rd960rh
2:24:47 PM
6/28/2012

LAST REVISION	REVISION	DESCRIPTION:		FDOT DESIGN STANDARDS 2013	NAVIGATION LIGHT SYSTEM DETAILS (FIXED BRIDGES)	INDEX NO.	SHEET NO.
01/01/12						21220	1

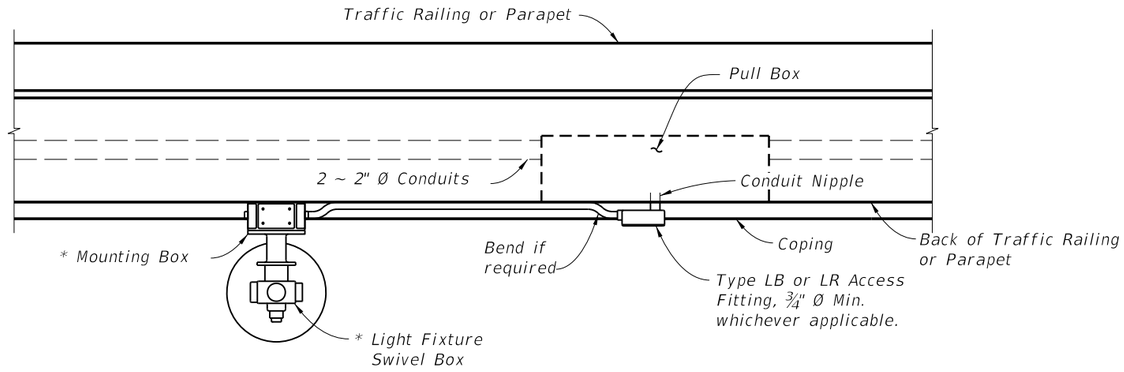

CROSS REFERENCES:
1. For Navigation Light System notes and legend, see Sheet 1.
2. See Utility Conduit Detail sheets for pull box dimensions & locations.

GCL OR RCL MOUNTING DETAILS (SCHEMATIC)
VIEW A-A
(Traffic Railing - 32" F Shape shown, other railings similar)

* Supplied by Light Fixture Manufacturer

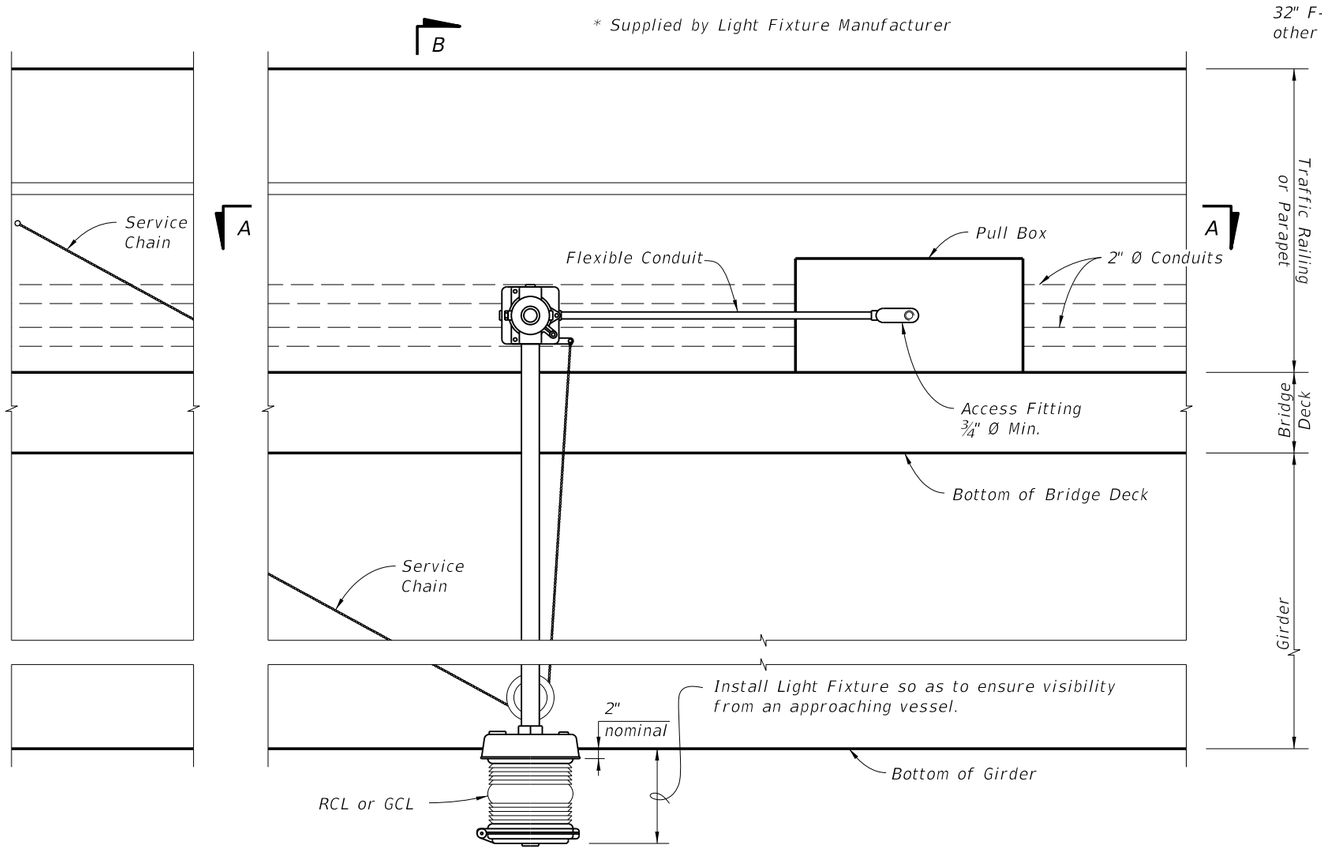

GCL OR RCL MOUNTING DETAILS (SCHEMATIC)
ELEVATION VIEW
(Traffic Railing (32" F Shape) shown, other railings similar)

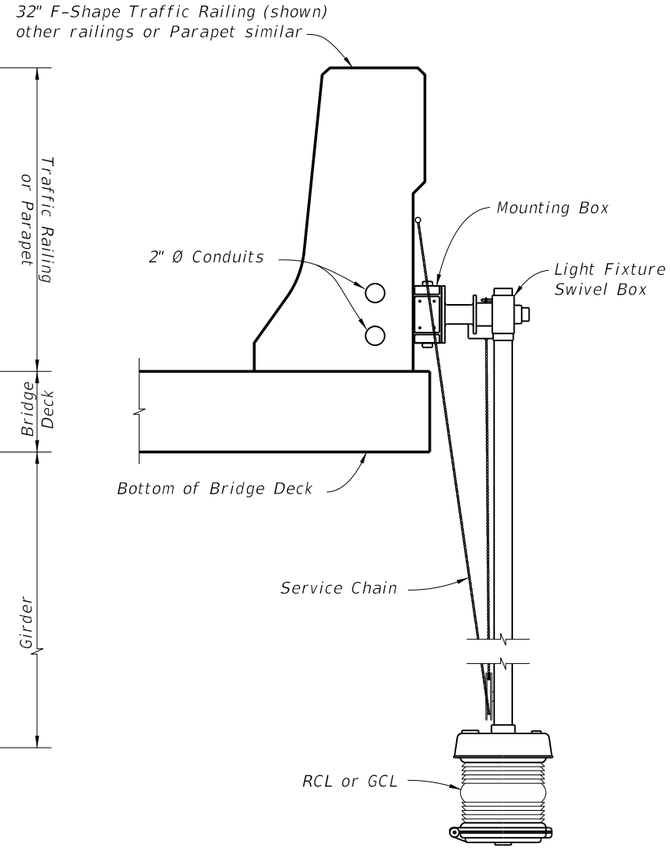

SECTION B-B
TYPICAL POSITION OF RCL OR GCL
RELATIVE TO SUPERSTRUCTURES

6/28/2012 2:24:52 PM rd960rh C:\d\projects\standards\structures\2013book\21220-2of2.dgn

LAST REVISION	REVISION	DESCRIPTION:				
01/01/12			FDOT DESIGN STANDARDS 2013	NAVIGATION LIGHT SYSTEM DETAILS (FIXED BRIDGES)	INDEX NO. 21220	SHEET NO. 2

BOX GIRDER MAINTENANCE LIGHTING NOTES:

1. Submit shop drawings to the Engineer detailing the layout of the maintenance lighting system for the entire structure. The shop drawings must include, but not be limited to, the following items:
   a. Conduit layout and installation details through diaphragms, around post-tensioning (PT) ducts, lateral bracing and cross frames as necessary.
   b. Conduit access through box girder end diaphragms with minimum 1" clearance in all directions.
   c. Conduit expansion fitting details.
   d. Fastener details for the interior electrical system.
   e. Single line diagram showing mini power centers, switches, contactors, timers, etc.
   f. Mini power center details including circuit breaker details.
   g. Mini power center mounting details if required.
   h. Feeder schedule.
2. Ensure installation meets all requirements of the latest edition of the National Electrical Code (NEC) and local ordinances. Install grounding in accordance with NEC Article 250. Maintain separation between 480V and 120V Conductors / Conduits throughout.
3. Furnish all labor, equipment, materials, and incidentals required for a complete and functional installation.
4. Use only new, unused and Underwriters Laboratories (UL) listed equipment and materials for outdoor use.
5. Furnish and install polyvinyl chloride (PVC) conduit in conformance with UL Section 651, NEC Section 347 and NEMA TC-2, UV-resistant and schedule 80. Bend conduits as necessary to connect to loads.
6. Provide PVC sleeve 2" bigger in diameter than conduit to accommodate construction tolerance.
7. Install a UL labeled expansion fitting for specified PVC conduit at all structure expansion joints. Provide certification that the expansion fitting meets the following minimum requirements: Compatibility with the connected conduits, waterproof, UV protected and allows longitudinal movement equal to that of the Expansion Joint.
8. Use only Alloy 316 stainless steel supporting hardware. Provide minimum $\frac{3}{16}$" Ø fasteners. For concrete or SIP form mounting, provide anchor bolts (expansion, drop-in or adhesive) suitable for dynamic loading (due to vibration caused by traffic). Install fasteners to avoid conflicts with reinforcing steel and PT ducts. For structural steel mounting, do not attach fasteners to main members, i.e. webs and flanges.
9. Furnish power distribution at 480V AC, 1 phase, with step down transformers at regular intervals. Furnish 7.5 KVA mini power center with eight 20A breakers as the step down transformer, feeding a maximum of 20 lamps and 20 receptacles. Each mini power center will provide power to no more than 1000' of bridge, preferably 500' on each side of the mini power center. 480V top feed, 120V bottom feed to maintain separation.
10. Furnish and install lighting contactors to switch the 480V AC feeding the mini power centers.
11. Furnish and install copper conductors, Type XHHW. Do not use any conductor larger than #4 AWG.
12. Provide enough slack in all interior cable terminations to allow for minor shifting of the structure.
13. Furnish and install National Electric Manufacturers Association (NEMA) Type 4X (non-metallic) surface mounted boxes sized in conformance with the NEC.
14. Furnish and install 120V duplex receptacles (GFI, NEMA Type 5-20R), in non-metallic outlet boxes at 50' maximum on centers. Provide each receptacle with a gasketed weather-protective outdoor plate. Maximum wire size to connect to receptacles is #12 AWG.
15. Furnish and install surface mounted, fully enclosed, incandescent light fixtures with gasketed clear globes and wire guards at 50' maximum on centers. Provide 100 watt, 130 volt, vibration resistant and brass base incandescent lamps.
16. Locate switches at each end of each span and at every access door.
17. Provide six hour reset timers for each circuit to turn off the lighting system automatically.
18. Include the cost of the box maintenance lighting system in the pay item for Lighting - Inside Box Girder (LS).

CROSS REFERENCES:
1. For Maintenance Light Details, see Sheet 2.
2. For actual bridge section, see Structures Plans.

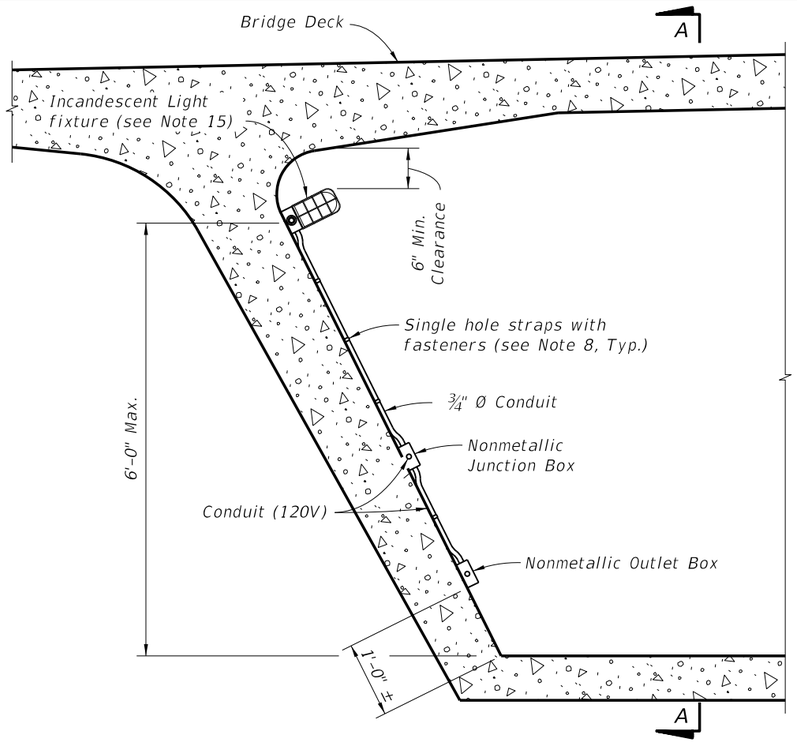

LIGHTING DETAILS FOR CONCRETE BOX GIRDER BRIDGE

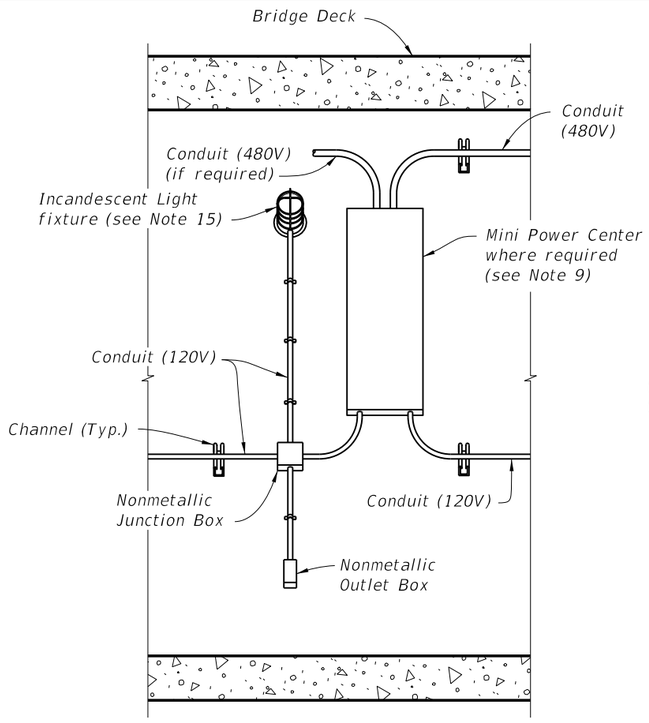

SECTION A-A

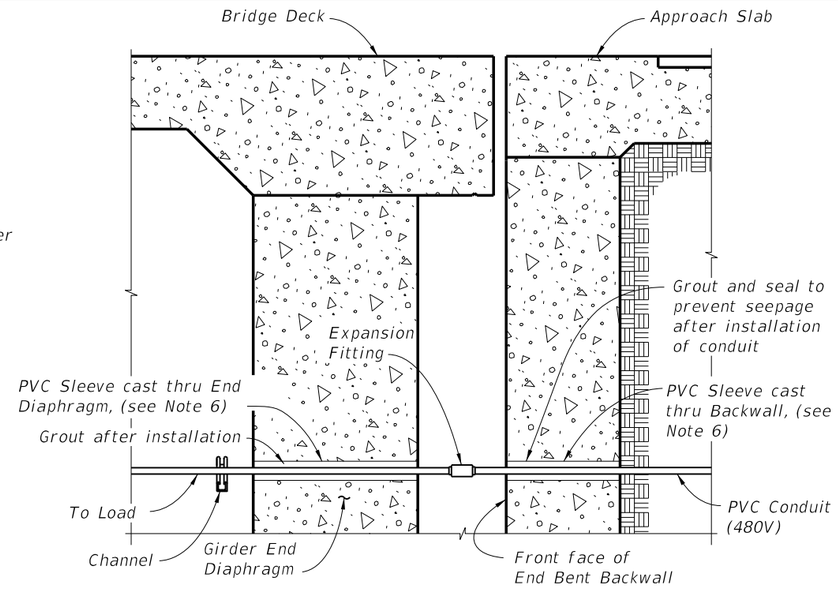

CONCRETE BOX GIRDER BRIDGE SECTION THRU END BENTS

CROSS REFERENCE:
1. For Box Girder Maintenance Lighting Notes see Sheet 1.

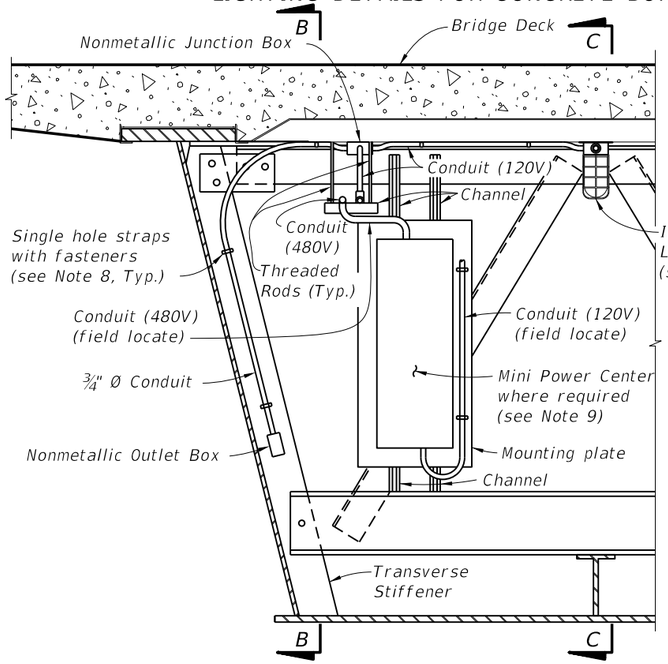

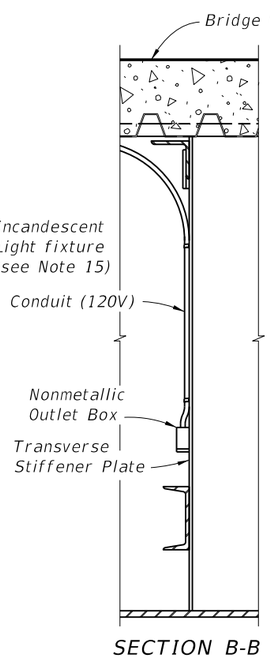

SECTION B-B

LIGHTING DETAILS FOR STEEL BOX GIRDER BRIDGE
(Cross Frame section shown, other Transverse Stiffener sections similar)

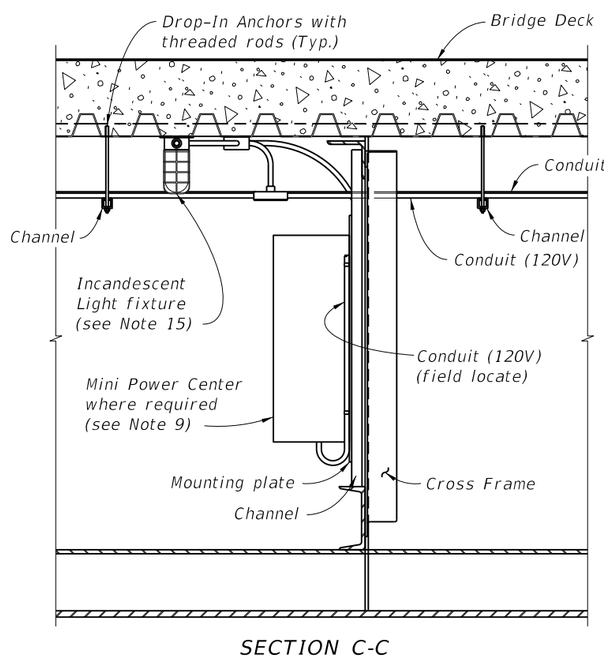

SECTION C-C

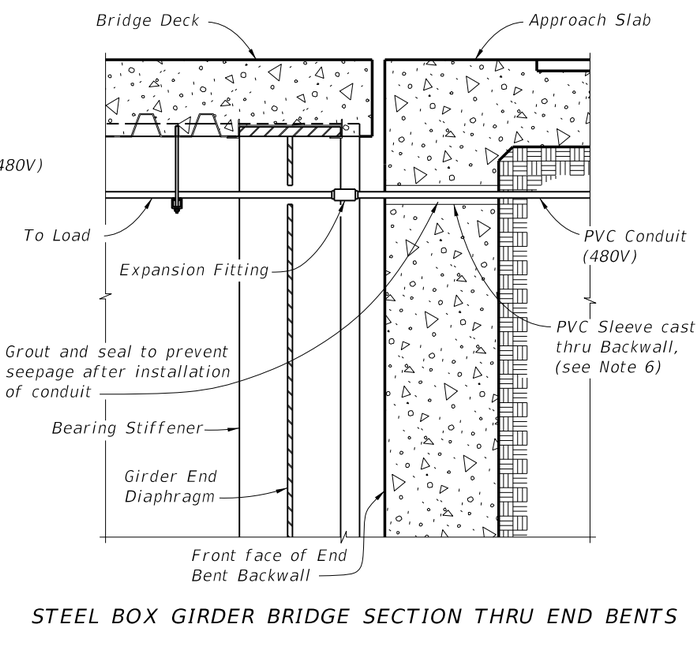

STEEL BOX GIRDER BRIDGE SECTION THRU END BENTS

C:\d\projects\standards\structures\2013book\21240-2of2.dgn
rd960rh
2:24:57 PM
6/28/2012

LAST REVISION	REVISION	DESCRIPTION:			INDEX NO.	SHEET NO.
07/01/05			FDOT DESIGN STANDARDS 2013	MAINTENANCE LIGHTING FOR BOX GIRDERS	21240	2

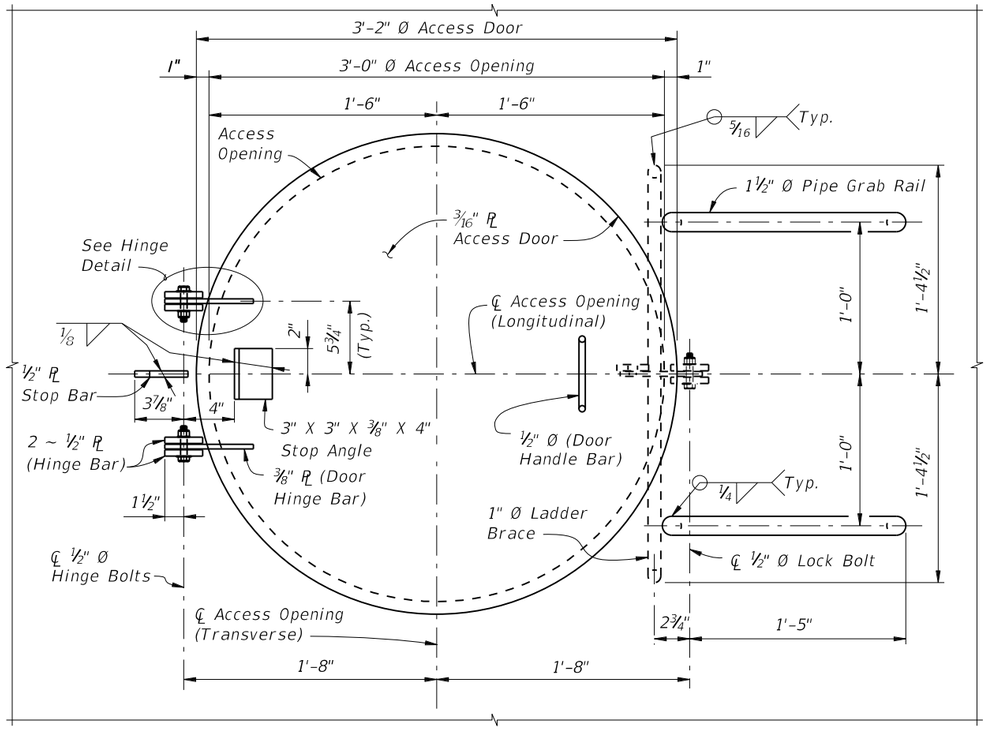

PLAN VIEW OF ACCESS HATCH ASSEMBLY

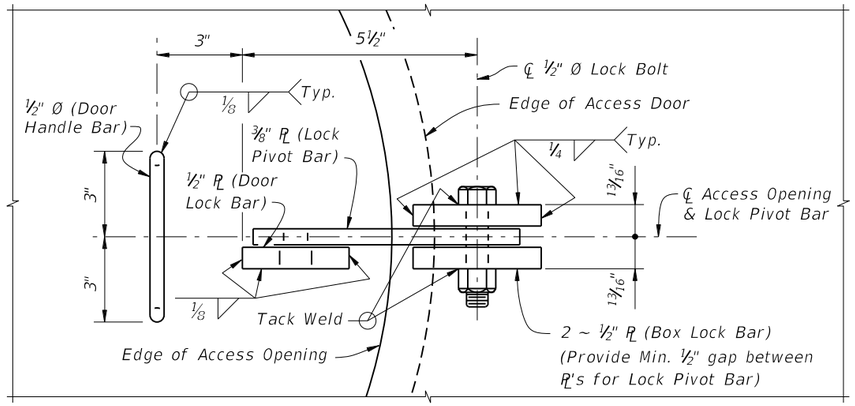

BOTTOM VIEW A-A

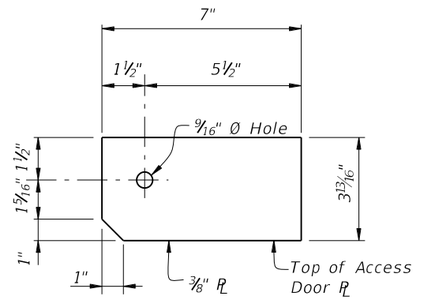

DOOR HINGE BAR DETAIL

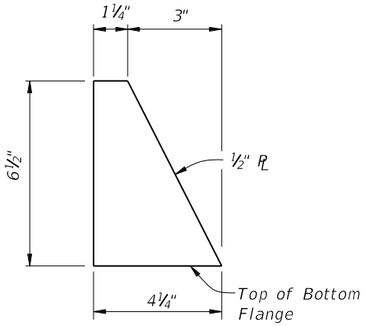

STOP BAR DETAIL

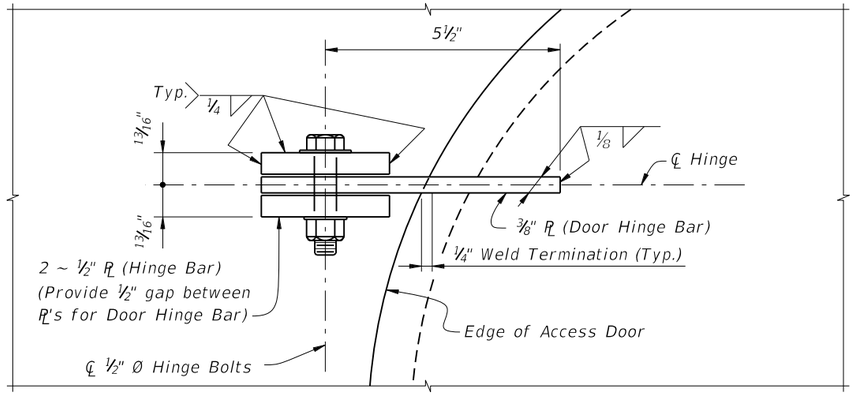

HINGE DETAIL

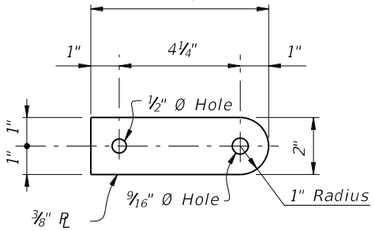

LOCK PIVOT BAR DETAIL

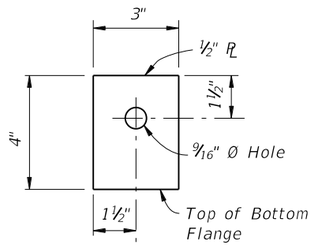

HINGE BAR DETAIL

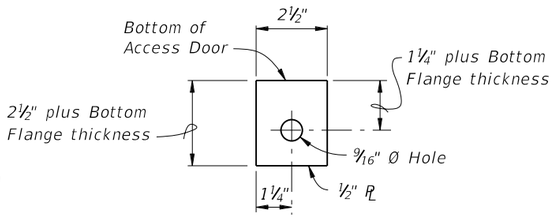

DOOR LOCK BAR DETAIL

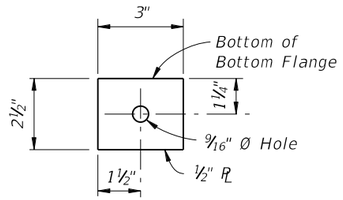

BOX LOCK BAR DETAIL

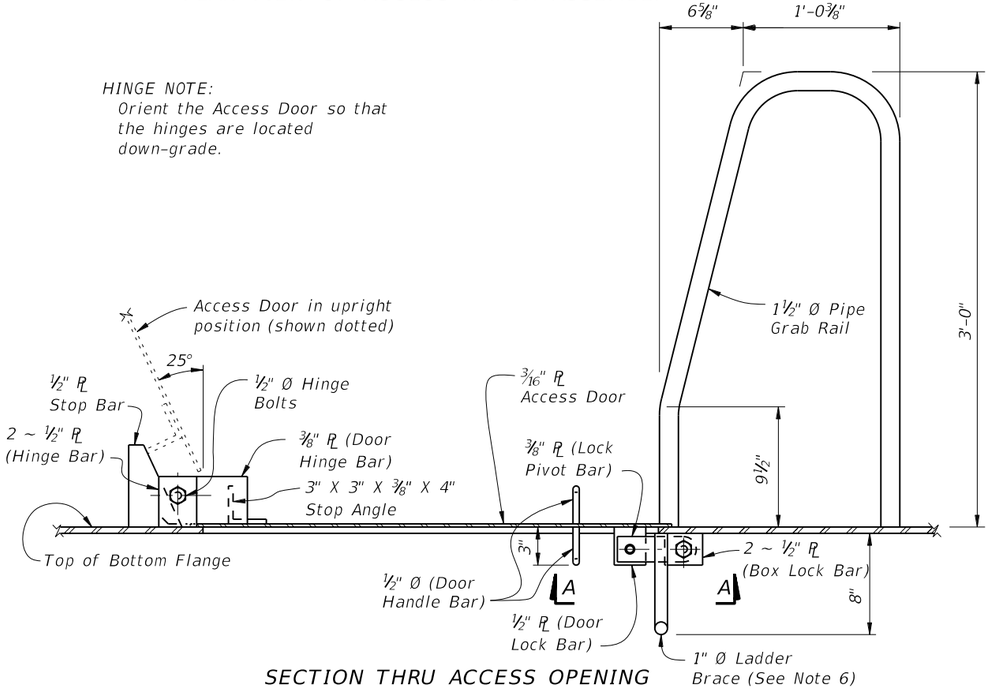

SECTION THRU ACCESS OPENING

NOTES:

1. All Structural Steel material in Access Door Assemblies shall conform to ASTM A709 Grade 36.
2. 1½" Ø Pipe Grab Rail shall be in accordance with ASTM A53 Grade B for standard weight pipe (Schedule 40).
3. ½" Ø Door Handle Bar and 1" Ø Ladder Brace shall be in accordance with ASTM A36.
4. All bolts shall conform to ASTM A307 or A449. All nuts shall conform to ASTM A563 and all washers shall conform to ASTM F-436.
5. All exposed edges of plates and openings shall be ground smooth.
6. Place Ladder Brace near the End Bents exclusively and only when the height is reasonable for access by a Ladder.
7. See Framing Plan sheets for locations of Access Door Openings.
8. Coat structural steel in accordance with Specification Section 560.
9. All costs associated with Access Hatch Assembly and incidental items will be paid for under the Access Hatch Assembly pay item. No separate payment will be made for coating structural steel.

C:\d\projects\standards\structures\2013book\21250-1of1.dgn
rd960rh
2:24:59 PM
6/28/2012

LAST REVISION	REVISION	DESCRIPTION:			INDEX NO.	SHEET NO.
01/01/11			FDOT DESIGN STANDARDS 2013	ACCESS HATCH ASSEMBLY FOR STEEL BOX SECTIONS	21250	1

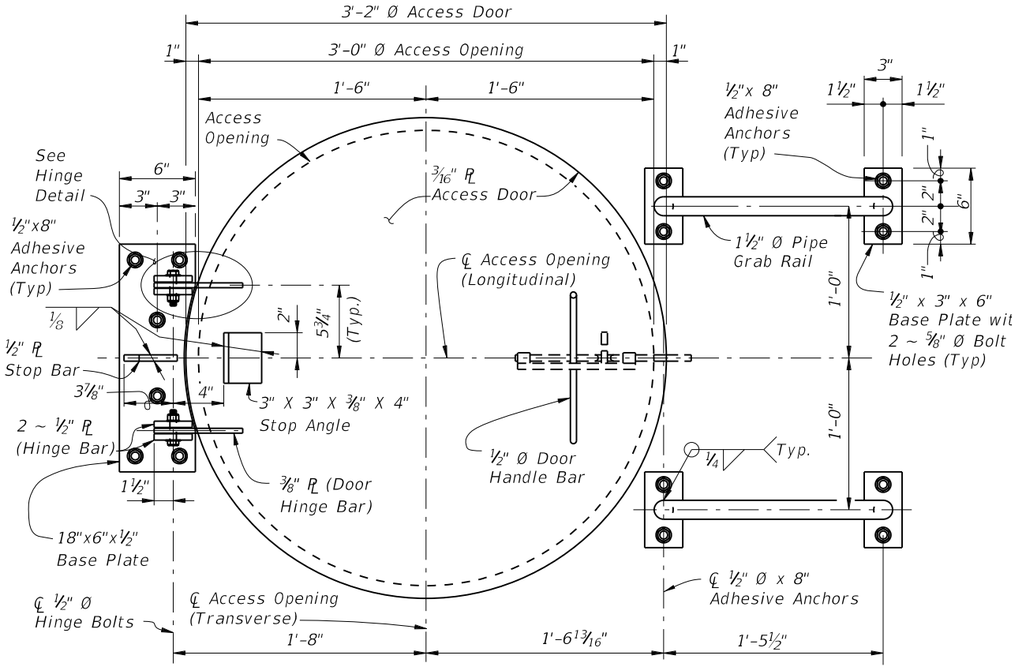

PLAN VIEW OF ACCESS HATCH ASSEMBLY

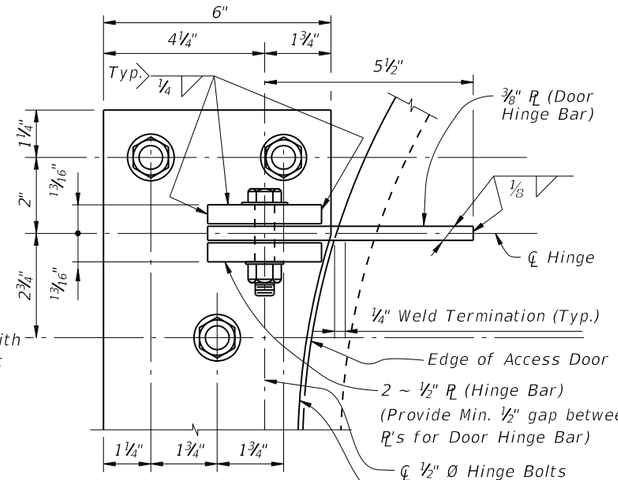

HINGE DETAIL

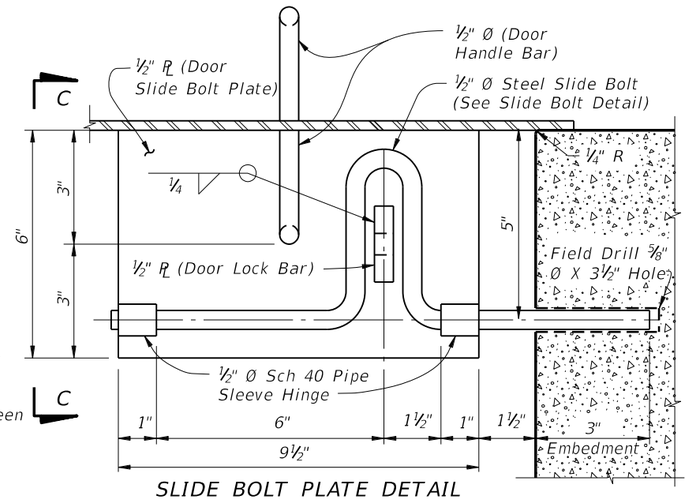

SLIDE BOLT PLATE DETAIL

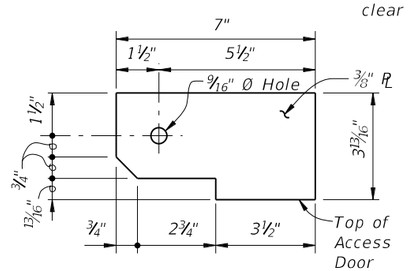

DOOR HINGE BAR DETAIL

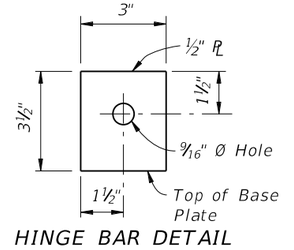

HINGE BAR DETAIL

HINGE NOTE:
1. Orient the Access Door so that the hinges are located down-grade.

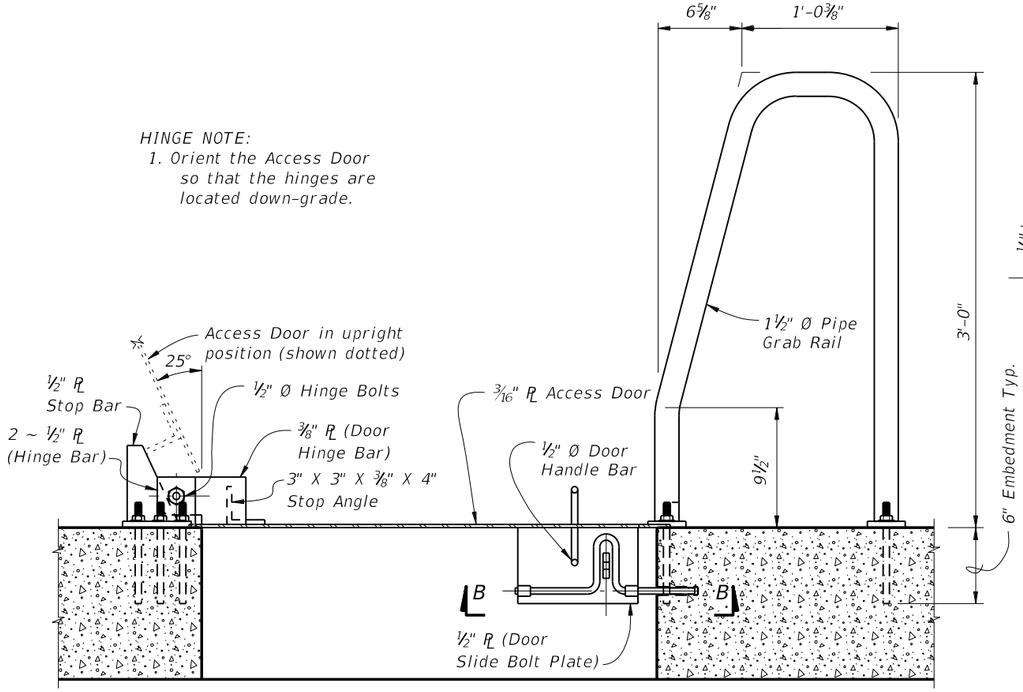

SECTION THRU ACCESS OPENING

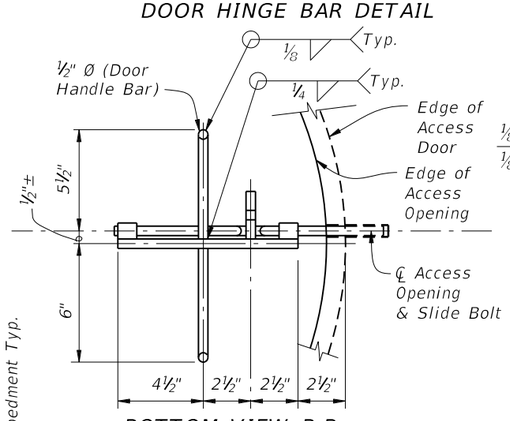

BOTTOM VIEW B-B

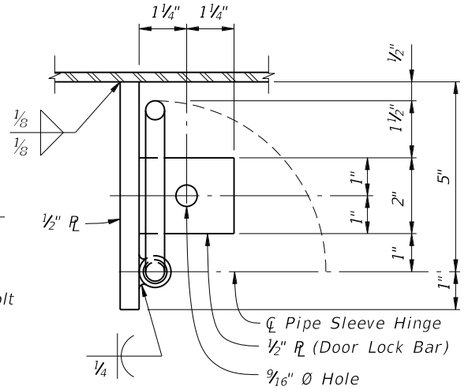

VIEW C-C

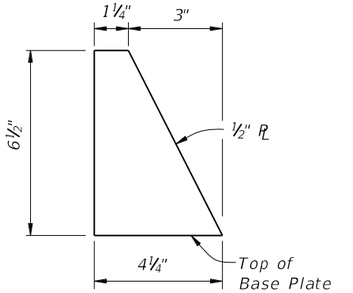

STOP BAR DETAIL

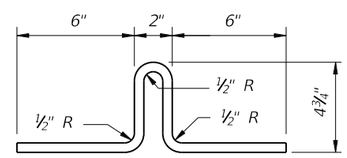

SLIDE BOLT DETAIL

NOTES:
1. All Structural Steel material in Access Door Assemblies shall conform to ASTM A709 Grade 36.
2. 1½" Ø Pipe Grab Rail shall be in accordance with ASTM A53 Grade B for standard weight pipe (Schedule 40).
3. ½" Ø Door Handle Bar shall be in accordance with ASTM A36.
4. All bolts shall conform to ASTM A307 or A449. All nuts shall conform to ASTM A563 and all washers shall conform to ASTM F-436.
5. All exposed edges of plates and openings shall be ground smooth.
6. See Framing Plan sheets for locations of Access Door Openings.
7. Coat structural steel in accordance with Specification Section 560.
8. All costs associated with Access Hatch Assembly and incidental items will be paid for under the Access Hatch Assembly pay item. No separate payment will be made for coating structural steel.

C:\d\projects\standards\structures\2013book\21251-1of1.dgn
rd960rh
2:25:02 PM
6/28/2012

LAST REVISION	REVISION	DESCRIPTION:			INDEX NO.	SHEET NO.
01/01/11			FDOT DESIGN STANDARDS 2013	ACCESS HATCH ASSEMBLY FOR CONCRETE BOX SECTIONS	21251	1

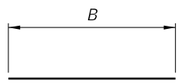

TYPE 1

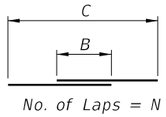

TYPE 2

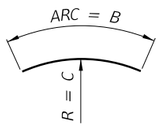

TYPE 3

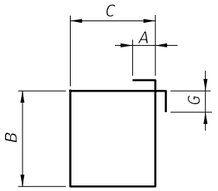

TYPE 4

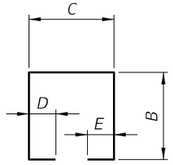

TYPE 5

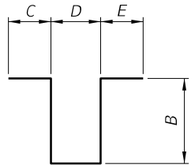

TYPE 6

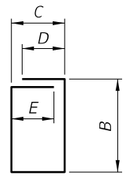

TYPE 7

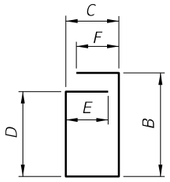

TYPE 8

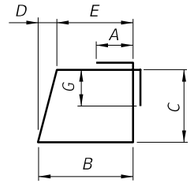

TYPE 9

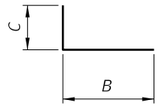

TYPE 10

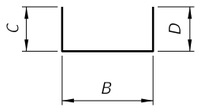

TYPE 1 1

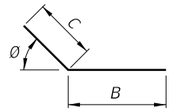

TYPE 12

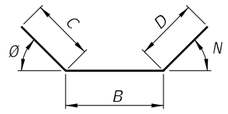

TYPE 13

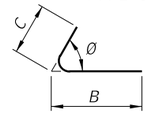

TYPE 14

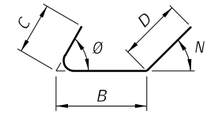

TYPE 15

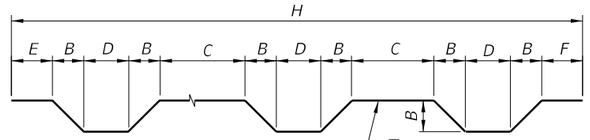

TYPE 16

Number of Beams or Walls = N
Number of D's = N-1
Number of B's = 2N-2
Number of C's = N-2
45° Typical

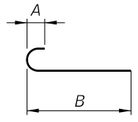

TYPE 17

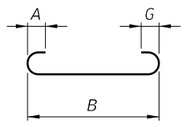

TYPE 18

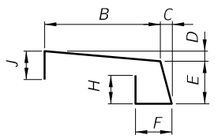

TYPE 19

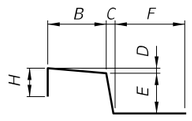

TYPE 20

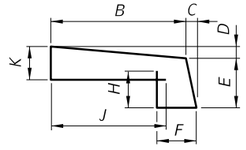

TYPE 21

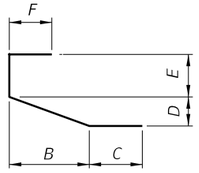

TYPE 22

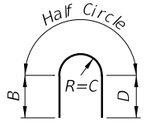

TYPE 23

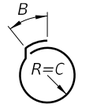

TYPE 24

NOTE: Type 17 Bars used in Superstructures shall be tilted to obtain Minimum cover.

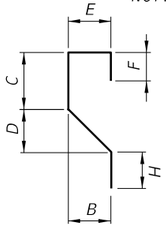

TYPE 25

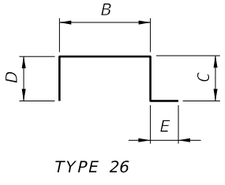

TYPE 26

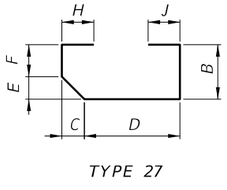

TYPE 27

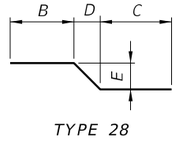

TYPE 28

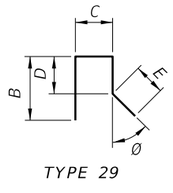

TYPE 29

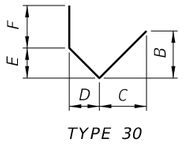

TYPE 30

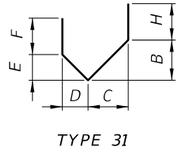

TYPE 31

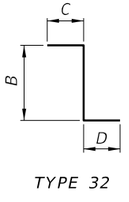

TYPE 32

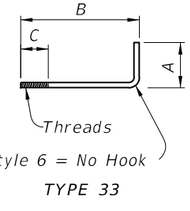

Style 6 = No Hook

TYPE 33

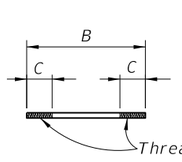

TYPE 34

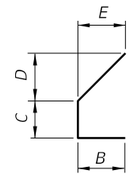

TYPE 35

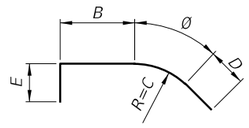

TYPE 36

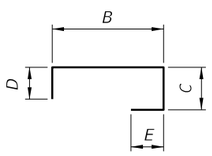

TYPE 37

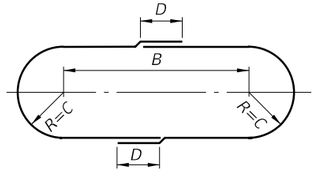

TYPE 38

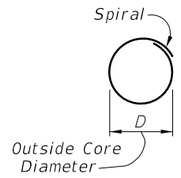

TYPE 39

C = Pitch
B = Overall Height
Ø = Spirals shall be made of ASTM A615 Grade 60 billet steel using either plain or deformed bars ASTM A615 or Cold drawn steel wire ASTM A82.
N = Total number of closed turns at Top and Bottom of columns
Splices may be accomplished by lapping 1.5 turns. Cost of Channel Spacers and Splices shall be included in the Contract Unit Price for Reinf. Steel (Substructure)

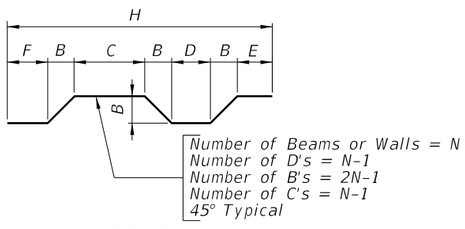

TYPE 40

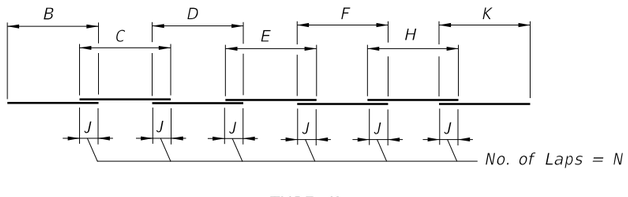

TYPE 41

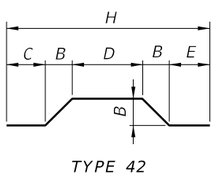

TYPE 42

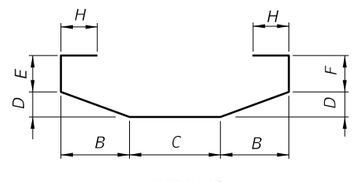

TYPE 43

HOOK DETAILS

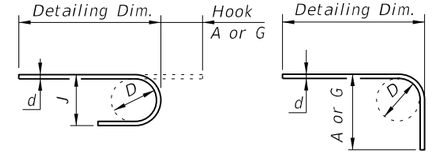

180° 90°

BAR SIZE	D	180° HOOKS		90° HOOKS
		A OR G	J	A OR G
#3	2¼"	5"	3"	6"
#4	3"	6"	4"	8"
#5	3¾"	7"	5"	10"
#6	4½"	8"	6"	1'-0"
#7	5¼"	10"	7"	1'-2"
#8	6"	11"	8"	1'-4"
#9	9½"	1'-3"	11¾"	1'-7"
#10	10¾"	1'-5"	1'-1¼"	1'-10"
#11	12"	1'-7"	1'-2¾"	2'-0"
#14	18¼"	2'-3"	1'-9¾"	2'-7"
#18	24"	3'-0"	2'-4½"	3'-5"
STYLE		1		3

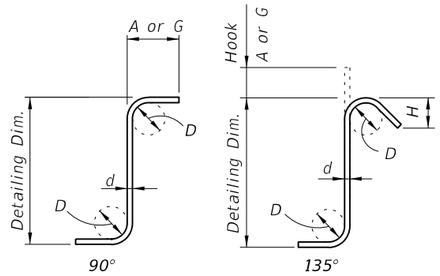

90° 135°

STIRRUPS (TIES SIMILAR)

RECOMMENDED STIRRUP & TIE HOOK DIMENSIONS

BAR SIZE	D	90° HOOKS	135° HOOKS	
		A or G	A or G	H *
#3	1½"	4"	4"	2½"
#4	2"	4½"	4½"	3"
#5	2½"	6"	5½"	3¾"
#6	4½"	1'-0"	8"	4½"
#7	5¼"	1'-2"	9"	5¼"
#8	6"	1'-4"	10½"	6"
STYLE		4	5	

STYLE 6 = NO HOOK

* Dimension is approximate.

Hook Styles Detailed on this sheet are for Illustration Only.

Actual Hook Style for any particular bar will be shown under A or G Heading on REINFORCING BAR LIST sheet(s) in Structures Plans.

All Dimensions are out-to-out.

NOTE: For Bar Dimensions See REINFORCING BAR LIST Sheet(s) in Structures Plans.

C:\d\projects\standards\structures\2013book\21300-1of1.dgn rd960rh 2:25:04 PM 6/28/2012

LAST REVISION	REVISION	DESCRIPTION:			INDEX NO.	SHEET NO.
01/01/12			FDOT DESIGN STANDARDS 2013	STANDARD BAR BENDING DETAILS	21300	1

GENERAL NOTES:

This Standard is only applicable to the current FDOT inventory of temporary bridge components which are manufactured in accordance with Acrow Series 300, Double Wide design. See the associated Instructions for Design Standards (IDS) for more information.

Work this Standard with Index Nos. 21610, 21620 and 21630.

STRUCTURAL STEEL:
Steel Plates and Rolled Sections shall be ASTM A 709 Grade 36.
Pipe piles shall be ASTM A 252 Grade 2, Fy = 35 ksi.

BOLTS, LAG SCREWS AND THREADED BOLT STOCK:
Furnish high strength bolts in accordance with ASTM A325. Furnish Threaded Stock in accordance with ASTM A36. Furnish Lag Screws in accordance with ASTM A307. Furnish steel washers and nuts compatible with Bolts, Threaded Stock and Lag Screws.

TIMBER AND LAGGING:
Timber and Lagging shall be No. 1 Southern Yellow Pine.

BACKWALL BENT PILES:
Timber Piles:
10' Minimum Embedment into compacted backfill or into soil having a blow count greater than 6 (N>6).
Ultimate Capacity greater than 18 tons.
Splices are not allowed on any timber piles.

H-Piles:
12' Minimum Embedment into compacted backfill or into soil having a blow count greater than 6 (N>6).
Ultimate Capacity greater than 18 tons.

Shims admissible between backwall pile and cap.
Test piles are not required for backwall piles.

EXPANSION BEARINGS:
Inspect the PTFE (Teflon) layer and stainless steel plate prior to installation.
Do not use bearings that have a severely damaged or unbonded PTFE layer.
Clean PTFE of all grit and grime prior to installation.
Clean Stainless steel plate of all grit and grime prior to installation and finish to a smooth buffed surface.

DISTRIBUTING BEAMS:
Longitudinal stops restraining the distributing beams may be lengthened or shortened to center the distributing beam bearing on the cap beam.
The longitudinal stops are to bear on the distributing beam end frame.

EXPANSION JOINT SETTINGS:
Install the expansion joint considering the total continuous bridge length, location of fixed bearings and ambient temperature at the time of installation, assume a 1" expansion joint opening at 70 degrees F.

STORAGE FACILITY:
Contact
FDOT Statewide Aluminum Shop
2590 Camp Rd.
Oviedo, Fl.
407-977-6520
For shipping weights and dimensions of Temporary Bridge elements.

SHIPPING WEIGHTS AND DIMENSIONS:

Decking Sizes:

Type	Length	Width	Weight (lbs.)
Curb	5'	6'-9"	800
Curb	10'	6'-9"	1420
Curb	15'	6'-9"	2200
Curb	20'	6'-9"	2800
NonCurb	5'	5'-3"	650
NonCurb	10'	5'-3"	1000
NonCurb	15'	5'-3"	1600
NonCurb	20'	5'-3"	2100

Shipping weights and dimensions of other bridge components can be referenced in "Acrow Panel Bridging, Series 300, Technical Handbook".

PAYMENT:
Temporary Detour Bridge is to be paid for under Contract Unit Price for Special Detour. If a temporary bridge system other than that shown herein is used, the Contractor is responsible for renting or purchasing their own system.

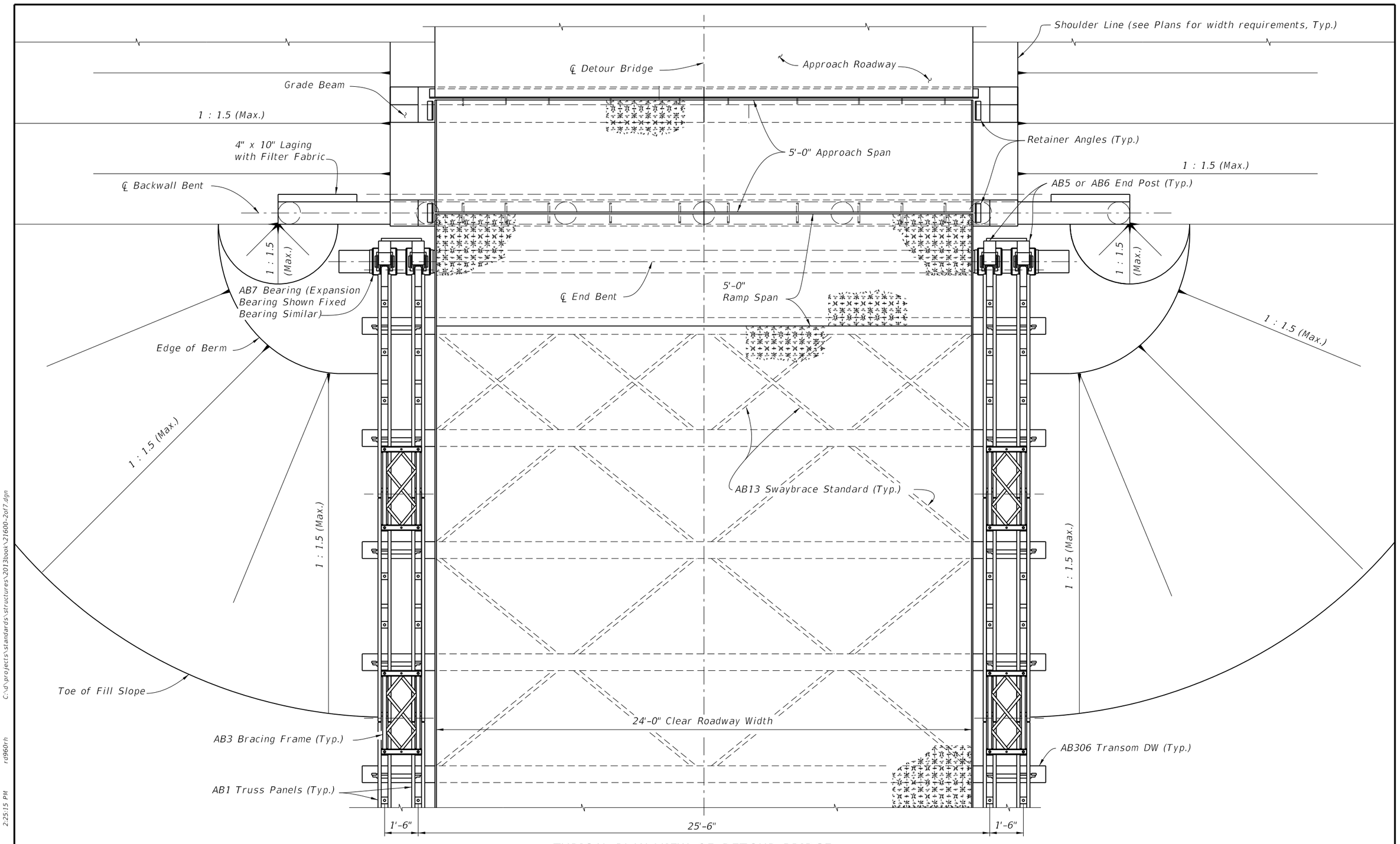

TYPICAL PLAN VIEW OF DETOUR BRIDGE
(TIMBER PILE SHOWN, STEEL H PILES AND STEEL PIPE PILES SIMILAR)

C:\d\projects\standards\structures\2013book\21600-2of7.dgn rd960rh 2:25:15 PM 6/28/2012

LAST REVISION	REVISION	DESCRIPTION:				
07/01/06			FDOT DESIGN STANDARDS 2013	TEMPORARY DETOUR BRIDGE GENERAL NOTES AND DETAILS	INDEX NO. 21600	SHEET NO. 2

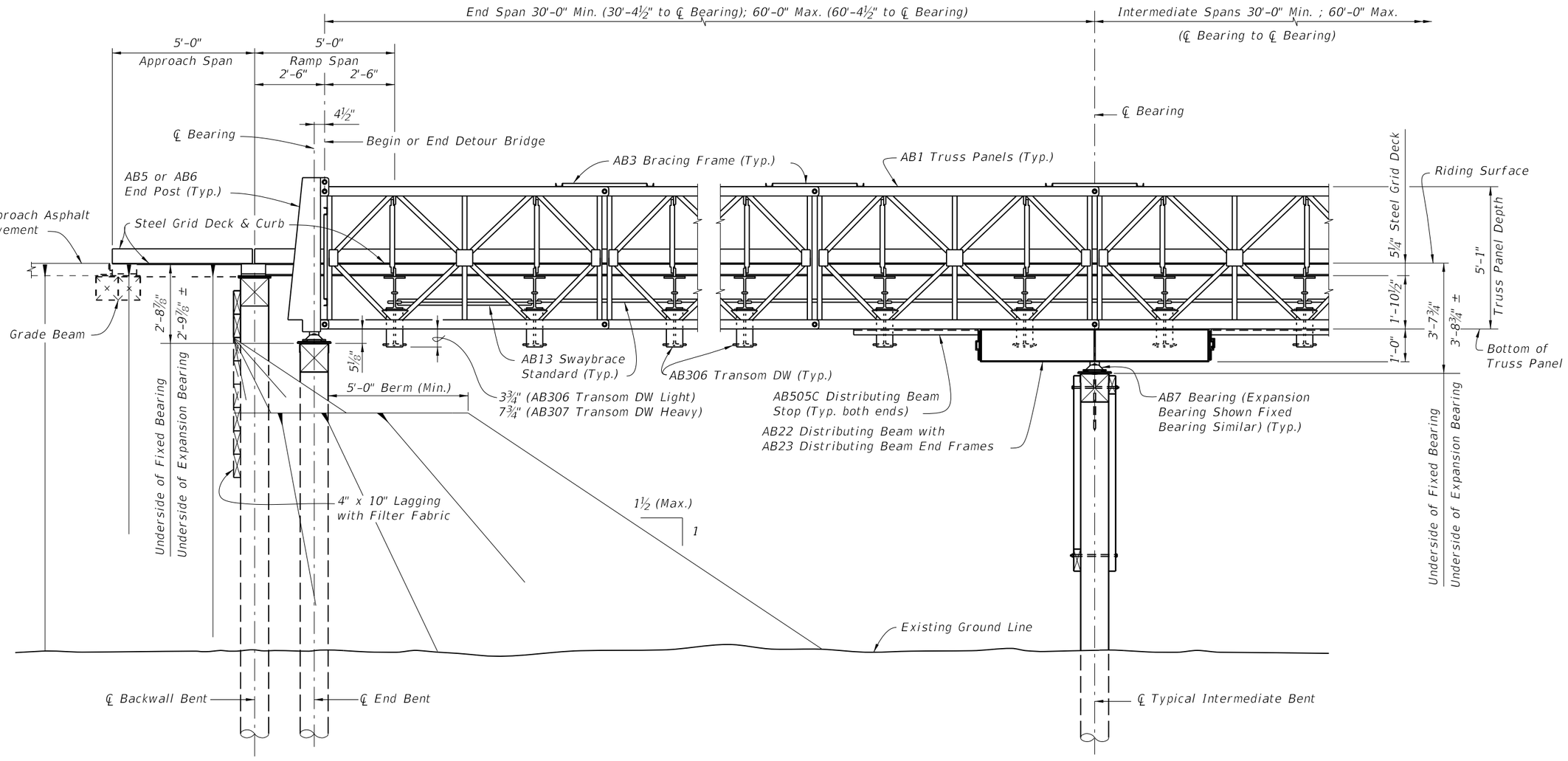

ELEVATION VIEW
(TIMBER PILES SHOWN, STEEL H PILES AND STEEL PIPE PILES SIMILAR)

6/28/2012 2:25:17 PM rd960rh C:\d\projects\standards\structures\2013book\21600-3of7.dgn

LAST REVISION	REVISION	DESCRIPTION:		FDOT DESIGN STANDARDS 2013	TEMPORARY DETOUR BRIDGE GENERAL NOTES AND DETAILS	INDEX NO.	SHEET NO.
01/01/08						21600	3

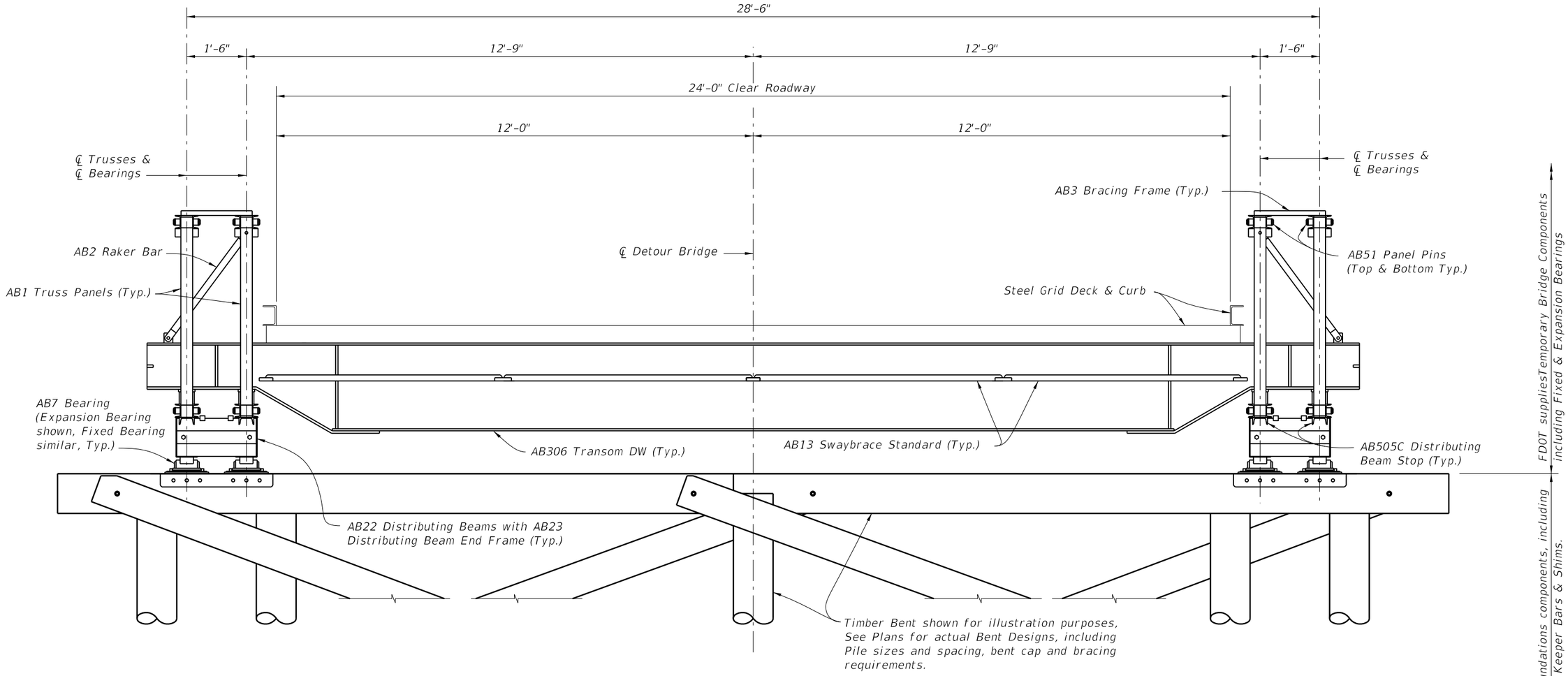

TYPICAL SECTION THRU DETOUR BRIDGE AT INTERIOR BENTS (TYPICAL SECTION AT END BENTS SIMILAR WITHOUT DISTRIBUTING BEAMS)
(TIMBER PILE SHOWN, STEEL H PILES AND STEEL PIPE PILE SIMILAR)

6/28/2012 2:25:19 PM rd960rh C:\d\projects\standards\structures\2013book\21600-4of7.dgn

LAST REVISION	REVISION	DESCRIPTION:		FDOT DESIGN STANDARDS 2013	TEMPORARY DETOUR BRIDGE GENERAL NOTES AND DETAILS	INDEX NO.	SHEET NO.
07/01/06						21600	4

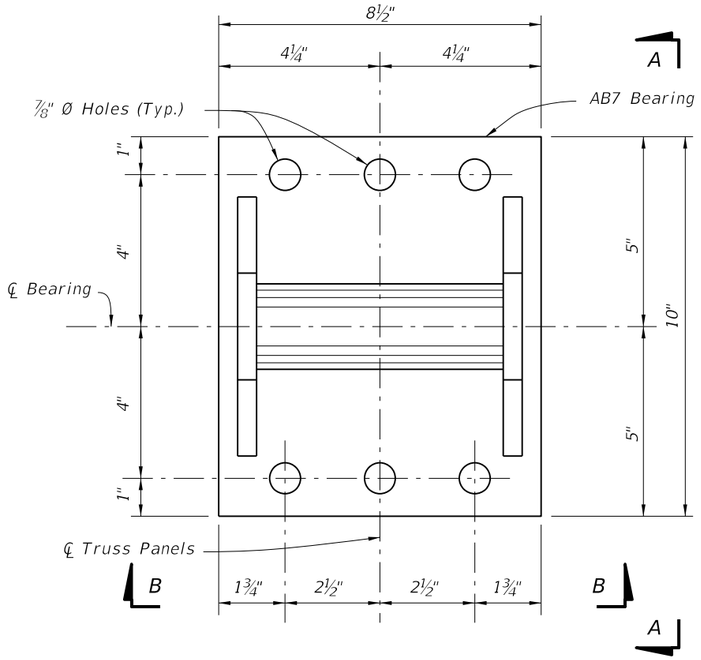

PLAN VIEW

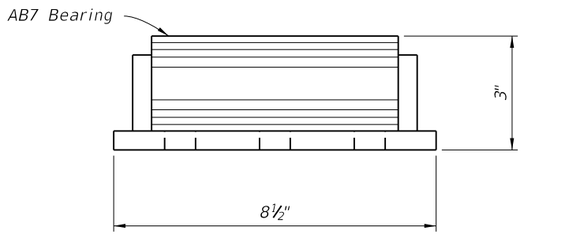

VIEW B-B

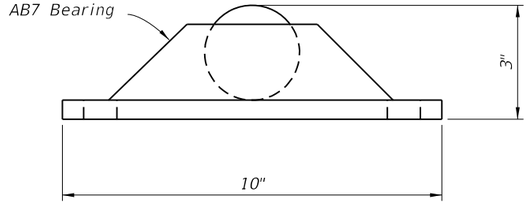

VIEW A-A

DETAILS FOR FDOT SUPPLIED FIXED BEARINGS

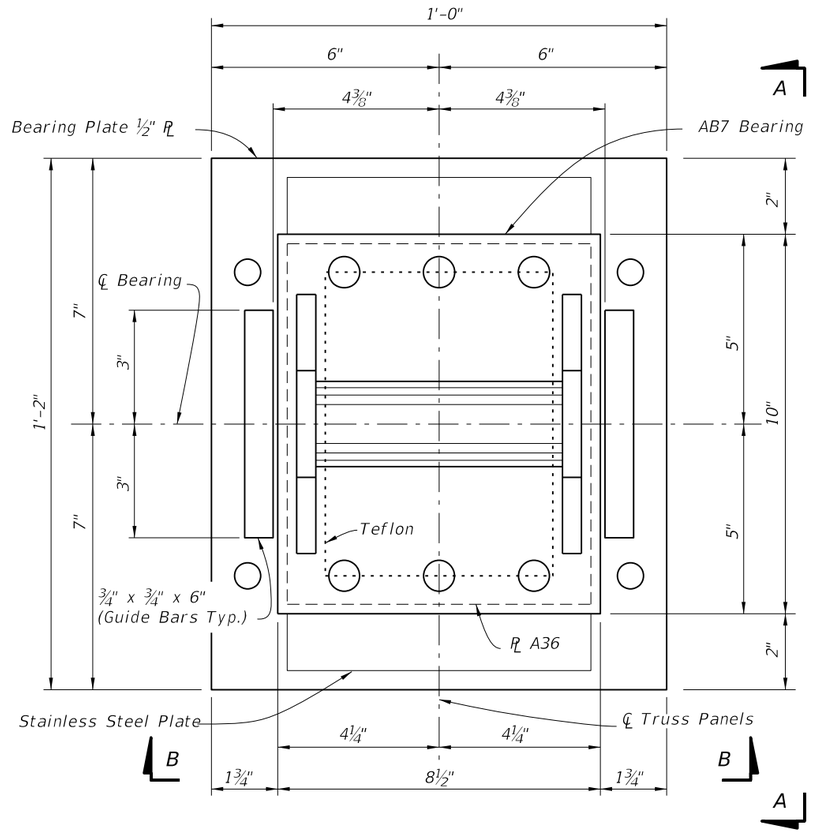

PLAN VIEW

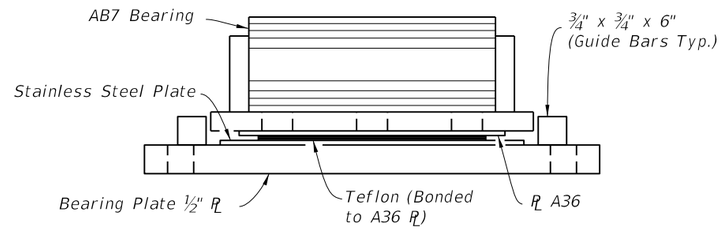

VIEW B-B

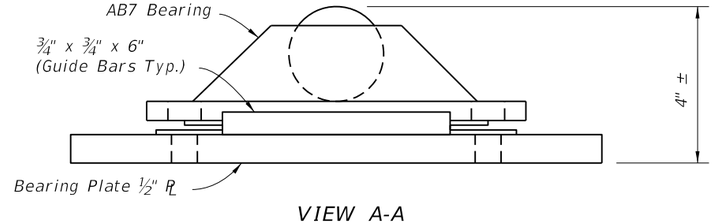

VIEW A-A

DETAILS FOR FDOT SUPPLIED EXPANSION BEARINGS

C:\d\projects\standards\structures\2013book\21600-5of7.dgn
rd960rh
2:25:22 PM
6/28/2012

LAST REVISION	REVISION	DESCRIPTION:			INDEX NO.	SHEET NO.
01/01/10			FDOT DESIGN STANDARDS 2013	TEMPORARY DETOUR BRIDGE GENERAL NOTES AND DETAILS	21600	5

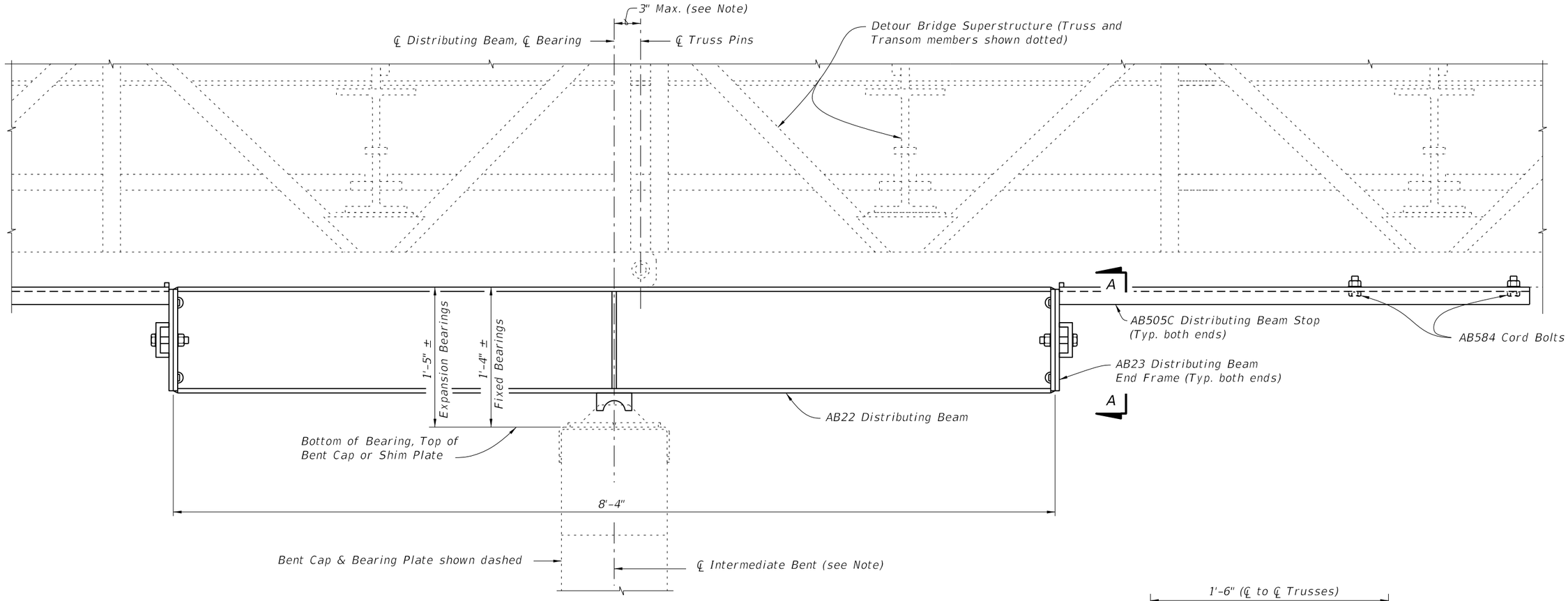

ELEVATION VIEW OF DISTRIBUTING BEAM
(FIXED BEARING SHOWN, EXPANSION BEARING SIMILAR)
(Timber Intermediate Bent shown, Steel H Pile and Steel Pipe Pile Intermediate Bents similar)

Note:
℄ Bearing may be shifted from ℄ Truss Pins as shown, ℄ Intermediate Bent may be shifted from ℄ Bearing an additional 3" to allow for pile placement tolerances.

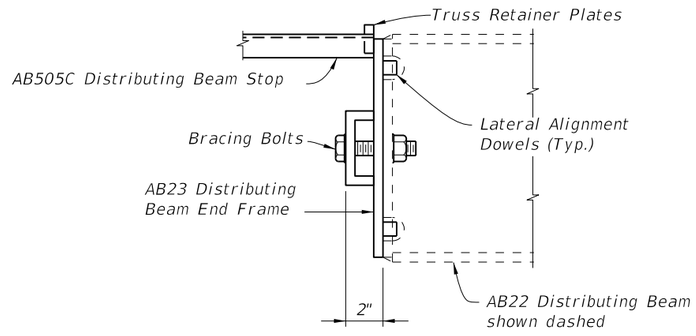

VIEW B-B

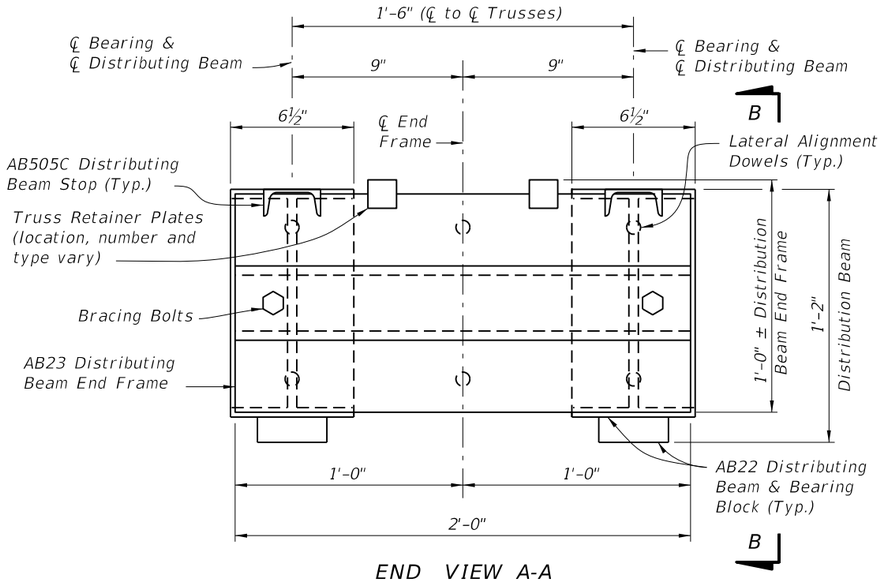

END VIEW A-A
DISTRIBUTING BEAM END FRAME DETAIL

6/28/2012 2:25:26 PM rd960rh C:\d\projects\standards\structures\2013book\21600-6of7.dgn

LAST REVISION	REVISION	DESCRIPTION:		FDOT DESIGN STANDARDS 2013	TEMPORARY DETOUR BRIDGE GENERAL NOTES AND DETAILS	INDEX NO.	SHEET NO.
07/01/06						21600	6

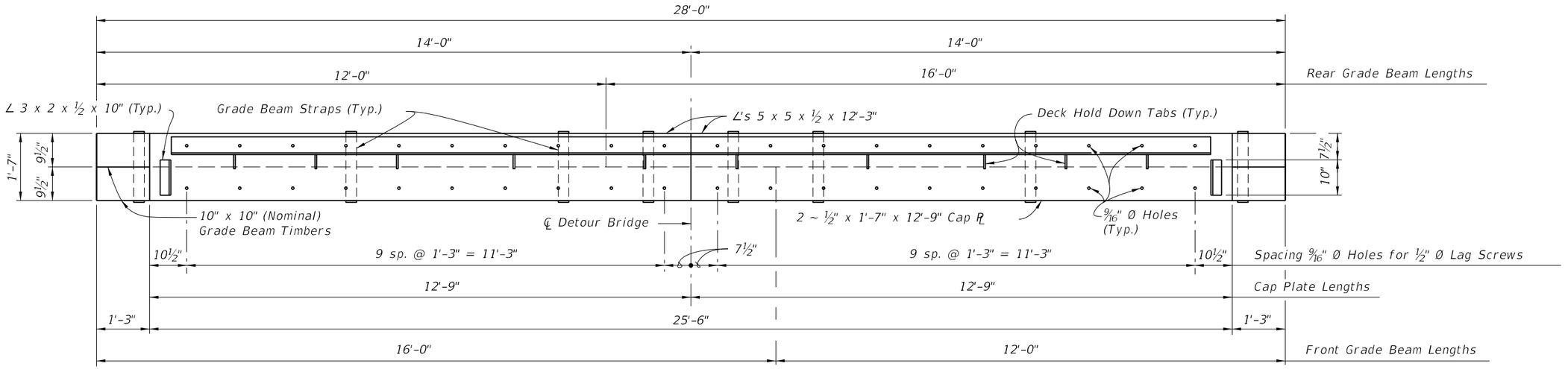

PLAN VIEW

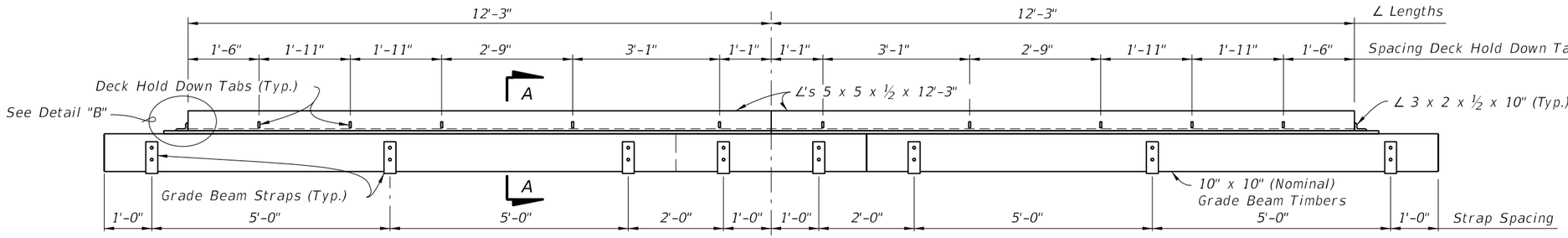

ELEVATION VIEW

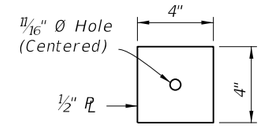

ANCHOR PLATE DETAIL

* See General Notes for setting widths other than 70° F.

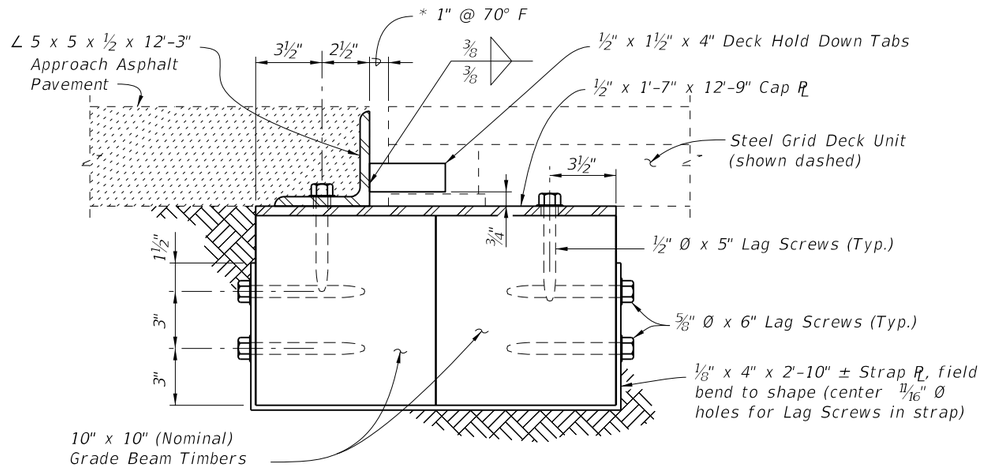

SECTION A-A

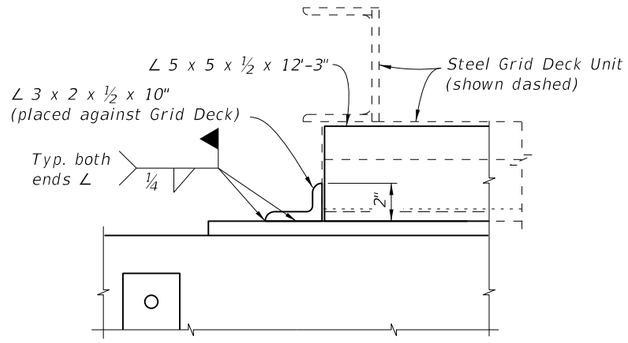

DETAIL "B"

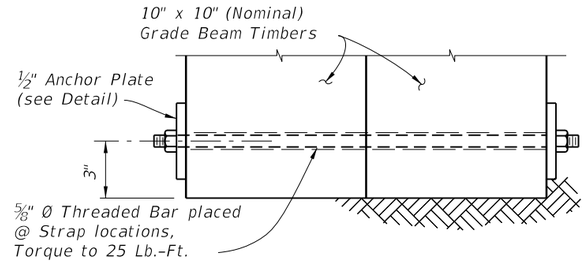

OPTIONAL THROUGH BOLT DETAIL
(MAY BE USED IN LIEU OF STRAPS)

GRADE BEAM DETAILS

LAST REVISION	REVISION	DESCRIPTION:		FDOT DESIGN STANDARDS 2013	TEMPORARY DETOUR BRIDGE GENERAL NOTES AND DETAILS	INDEX NO.	SHEET NO.
07/01/06						21600	7

6/28/2012 2:25:28 PM rd960rh C:\d\projects\standards\structures\2013book\21600-7of7.dgn

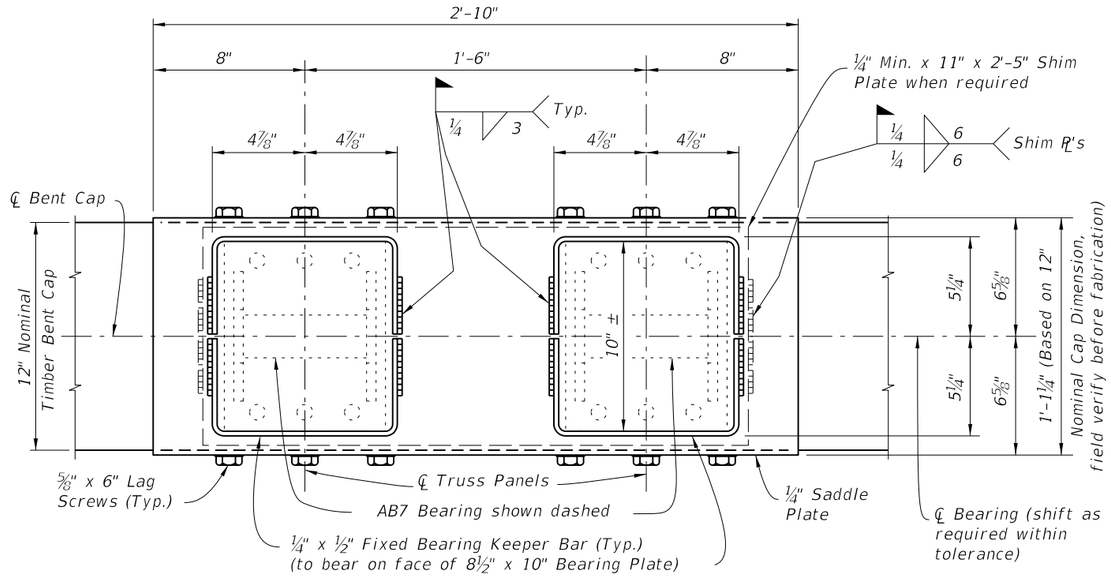

PLAN VIEW

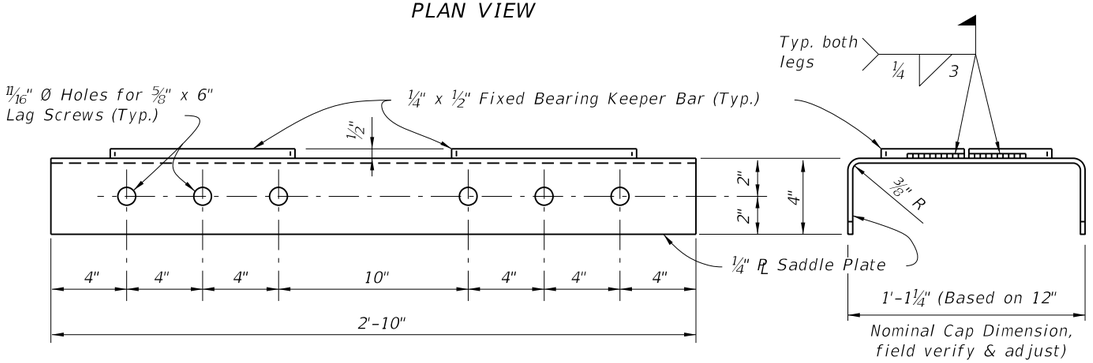

ELEVATION VIEW OF SADDLE PLATE

END VIEW

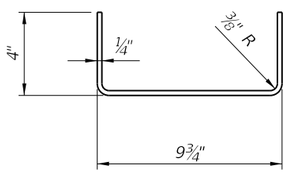

FIXED BEARING KEEPER BAR DETAIL

FIXED BEARING DETAILS

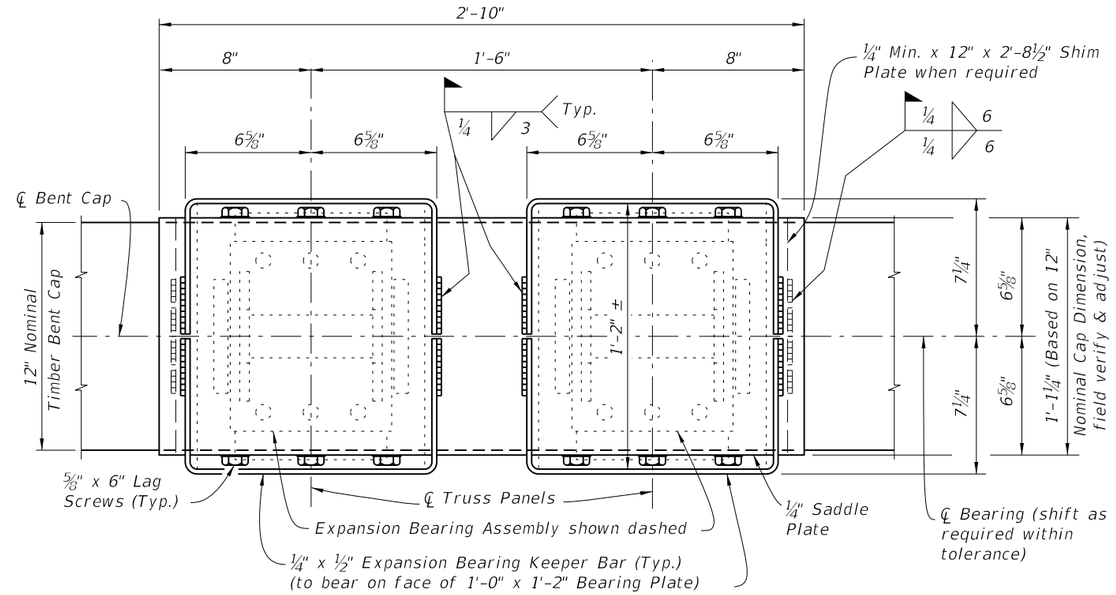

PLAN VIEW

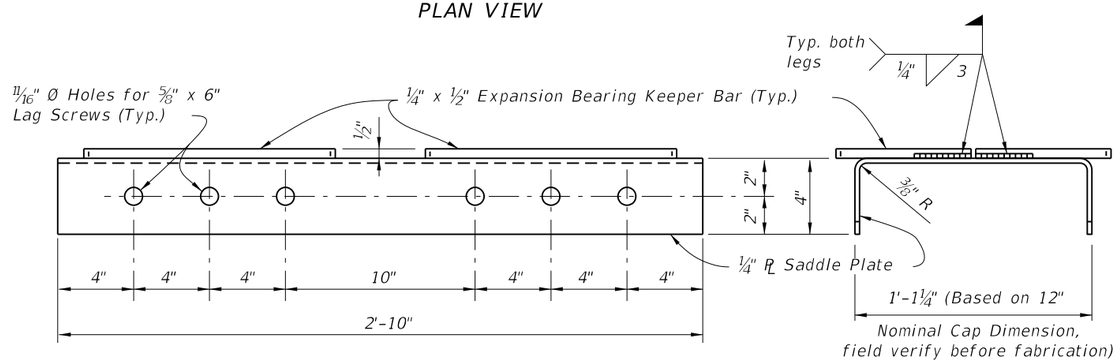

ELEVATION VIEW OF SADDLE PLATE

END VIEW

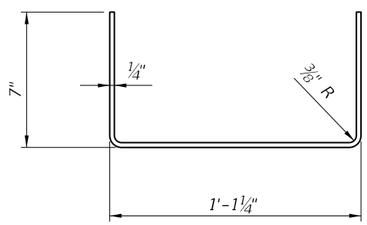

EXPANSION BEARING KEEPER BAR DETAIL

EXPANSION BEARING DETAILS

LAST REVISION	REVISION	DESCRIPTION:		FDOT DESIGN STANDARDS 2013	TEMPORARY DETOUR BRIDGE DETAILS - TIMBER PILE FOUNDATIONS	INDEX NO.	SHEET NO.
07/01/06						21610	1

6/28/2012 2:25:30 PM rd960rh C:\d\projects\standards\structures\2013book\21610-1of3.dgn

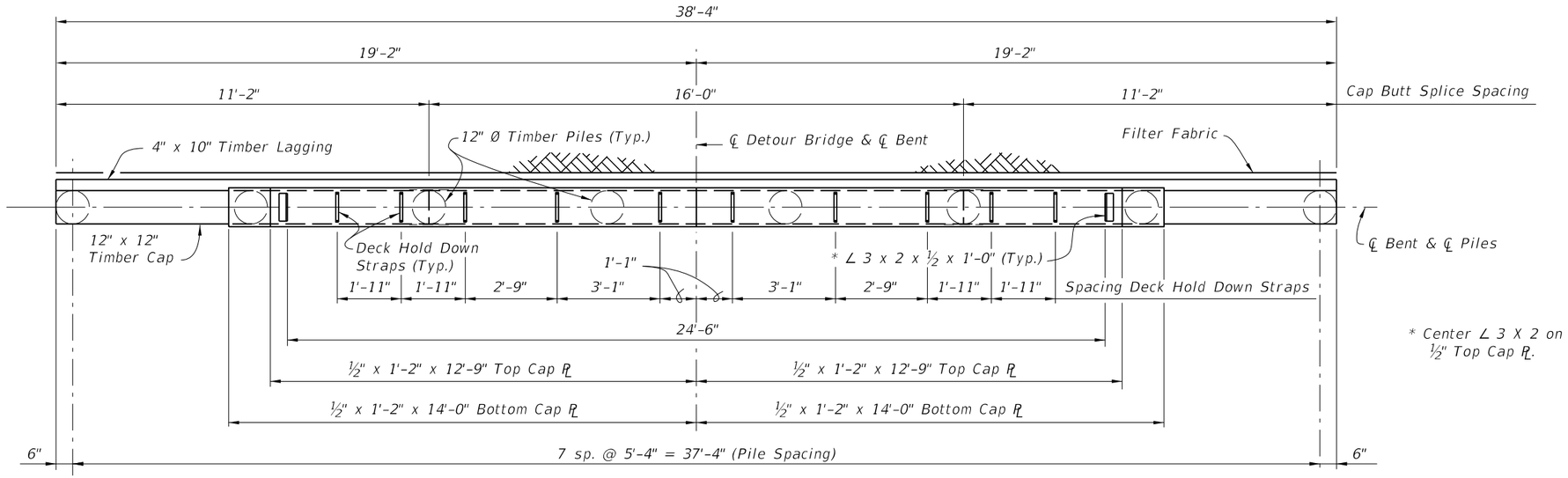

* Center ∠ 3 X 2 on ½" Top Cap Pℒ.

PLAN VIEW

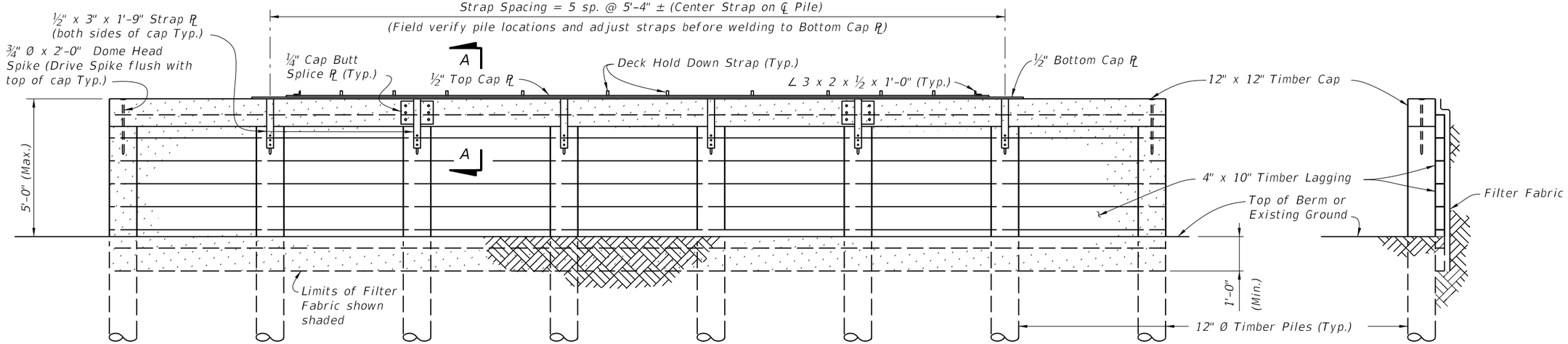

ELEVATION VIEW

END VIEW

BACKWALL BENT DETAILS

LAST REVISION	REVISION	DESCRIPTION:			INDEX NO.	SHEET NO.
07/01/06			FDOT DESIGN STANDARDS 2013	TEMPORARY DETOUR BRIDGE DETAILS - TIMBER PILE FOUNDATIONS	21610	2

6/28/2012 2:25:32 PM rd960rh C:\d\projects\standards\structures\2013book\21610-2of3.dgn

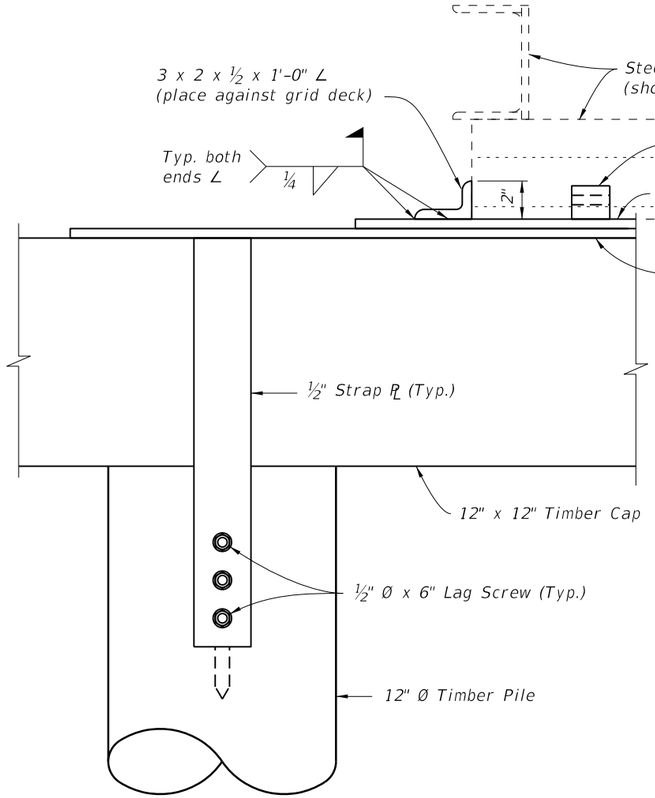

VIEW B-B
(SHOWING END OF CAP PLATES)

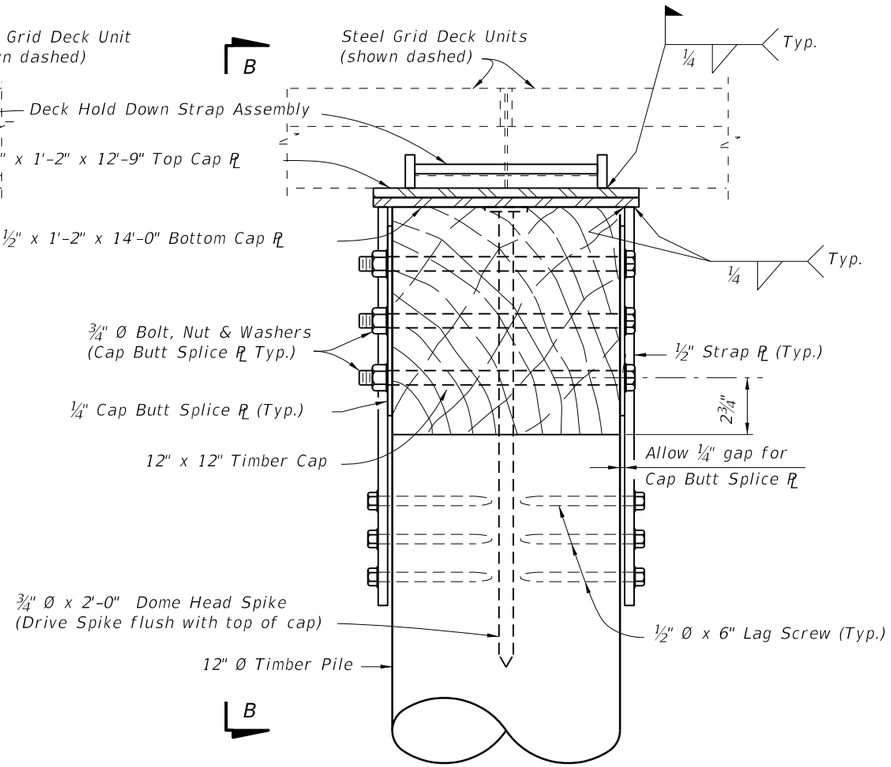

SECTION A-A

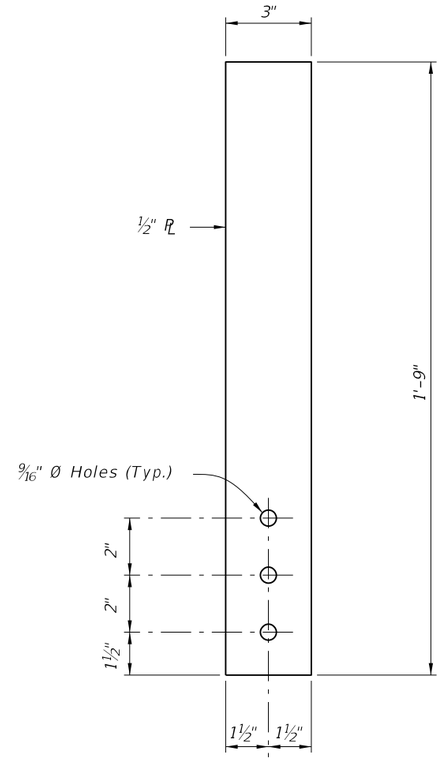

STRAP PLATE DETAIL

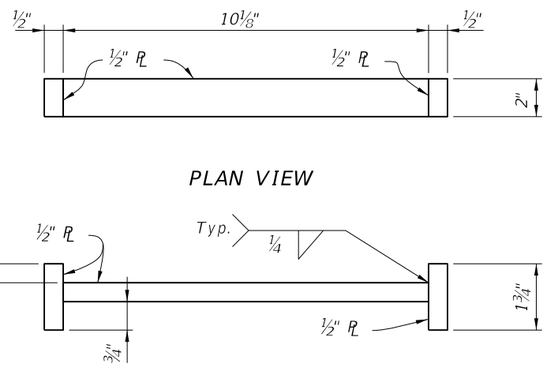

PLAN VIEW

ELEVATION VIEW

HOLD DOWN STRAP ASSEMBLY DETAIL

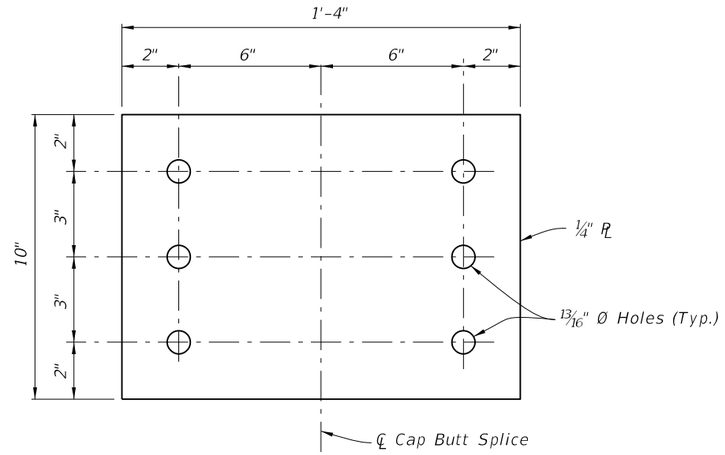

CAP BUTT SPLICE PLATE DETAIL

BACKWALL BENT DETAILS

LAST REVISION	REVISION	DESCRIPTION:				
07/01/06			FDOT DESIGN STANDARDS 2013	TEMPORARY DETOUR BRIDGE DETAILS - TIMBER PILE FOUNDATIONS	INDEX NO. 21610	SHEET NO. 3

C:\d\projects\standards\structures\2013book\21610-3of3.dgn
rd960rh
2:25:35 PM
6/28/2012

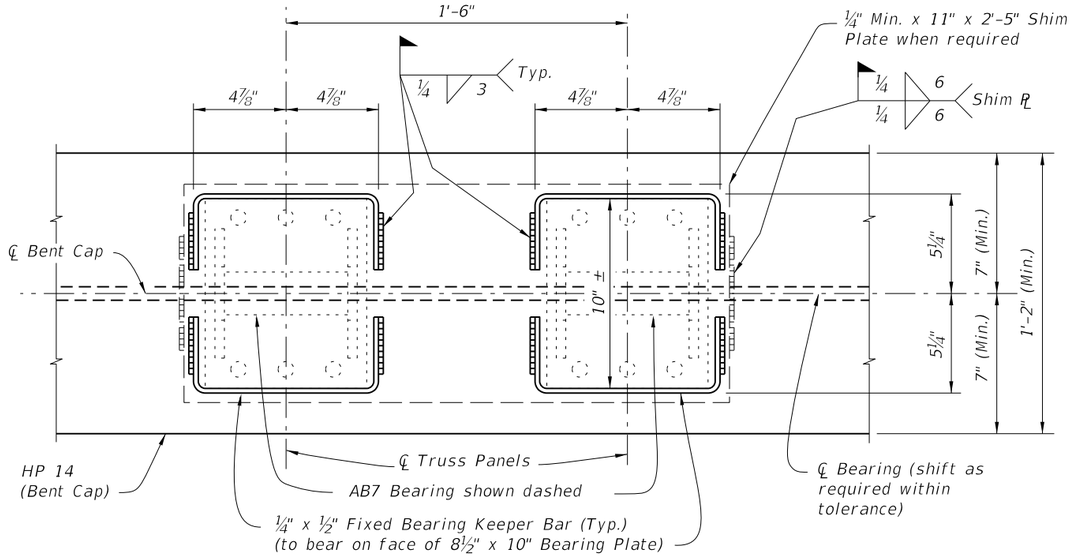

PARTIAL PLAN VIEW

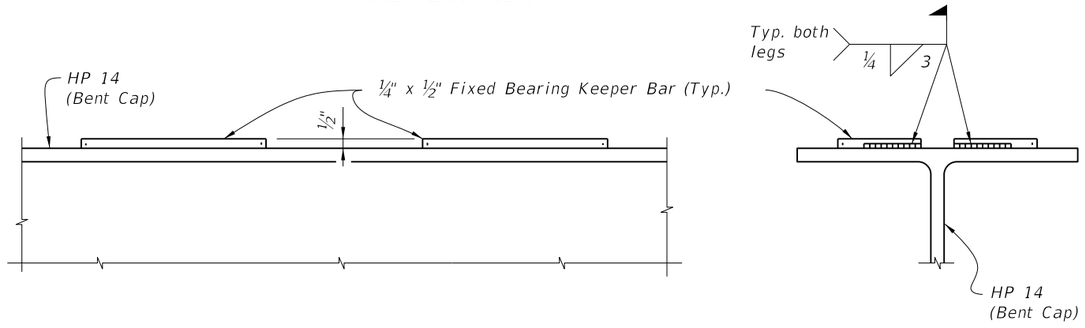

PARTIAL ELEVATION VIEW

END VIEW

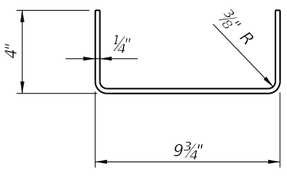

FIXED BEARING KEEPER BAR DETAIL

FIXED BEARING DETAILS

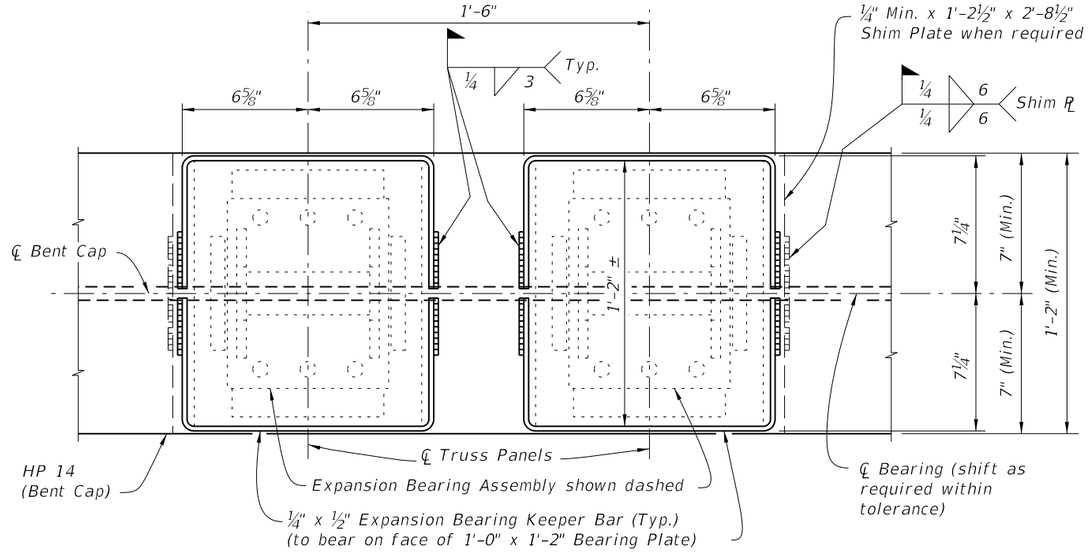

PARTIAL PLAN VIEW

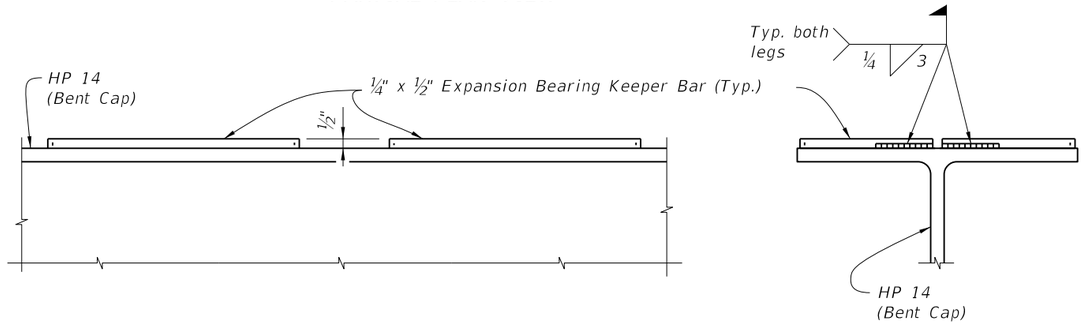

PARTIAL ELEVATION VIEW

END VIEW

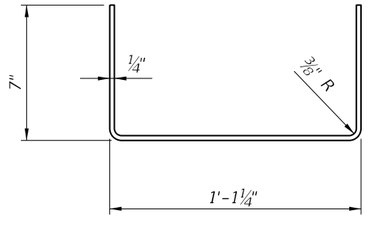

EXPANSION BEARING KEEPER BAR DETAIL

EXPANSION BEARING DETAILS

6/28/2012 2:25:37 PM rd960rh C:\d\projects\standards\structures\2013book\21620-1of2.dgn

LAST REVISION	REVISION	DESCRIPTION:		FDOT DESIGN STANDARDS 2013	TEMPORARY DETOUR BRIDGE DETAILS - STEEL H PILE FOUNDATIONS	INDEX NO.	SHEET NO.
07/01/06						21620	1

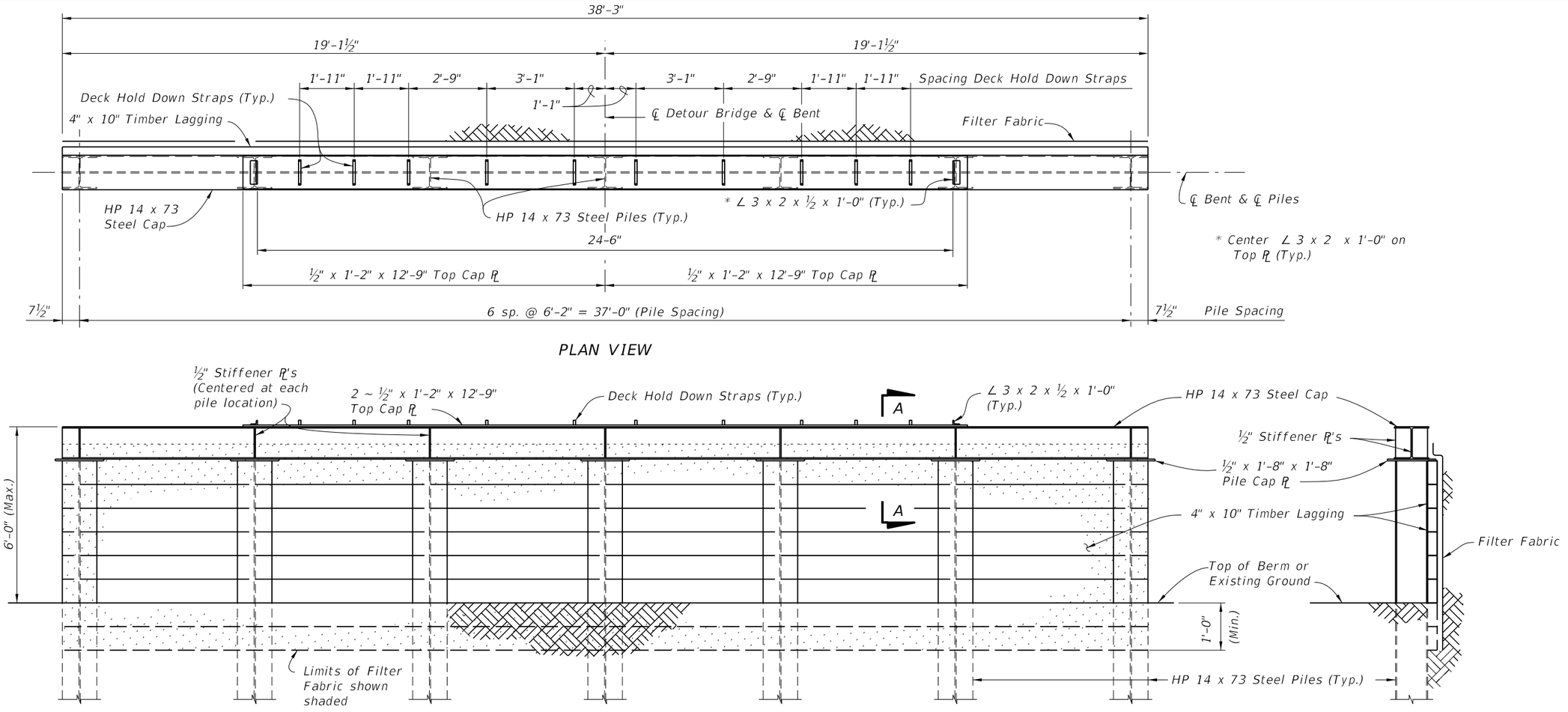

PLAN VIEW

ELEVATION VIEW

END VIEW

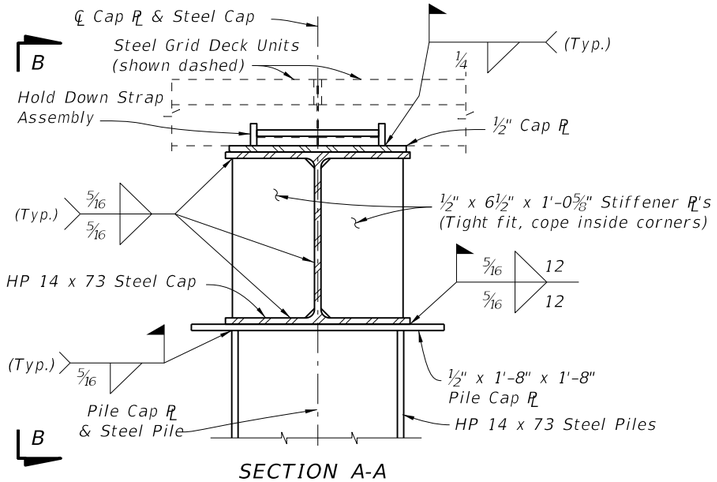

SECTION A-A
(LAGGING NOT SHOWN FOR CLARITY)

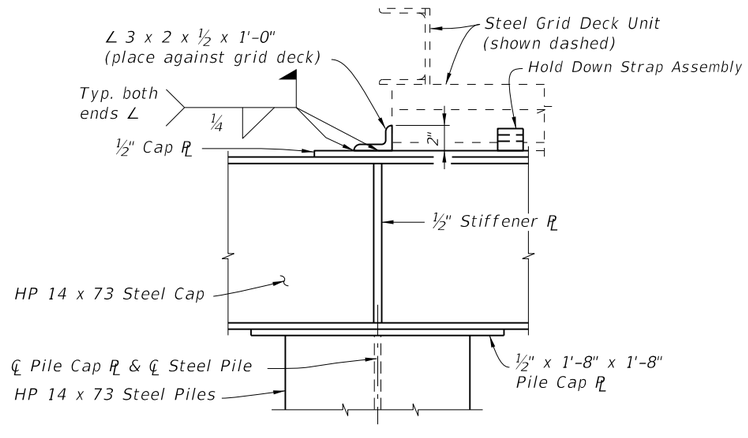

VIEW B-B

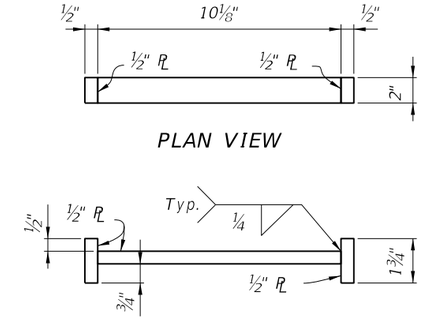

BACKWALL BENT DETAILS

LAST REVISION	REVISION	DESCRIPTION:			INDEX NO.	SHEET NO.
07/01/06			FDOT DESIGN STANDARDS 2013	TEMPORARY DETOUR BRIDGE DETAILS - STEEL H PILE FOUNDATIONS	21620	2

C:\d\projects\standards\structures\2013book\21620-2of2.dgn
rd960rh
2:25:39 PM
6/28/2012

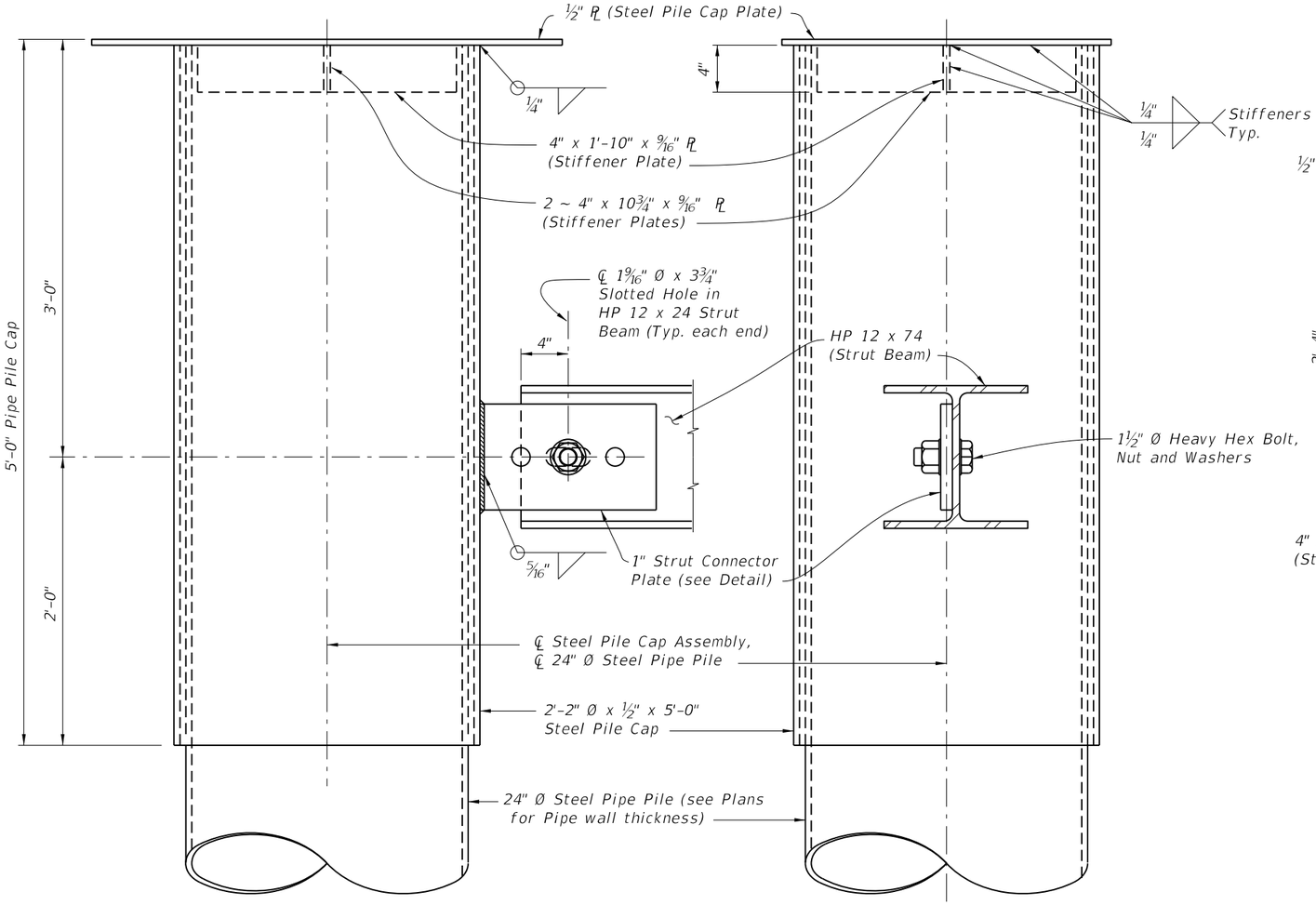

PARTIAL VIEW A-A

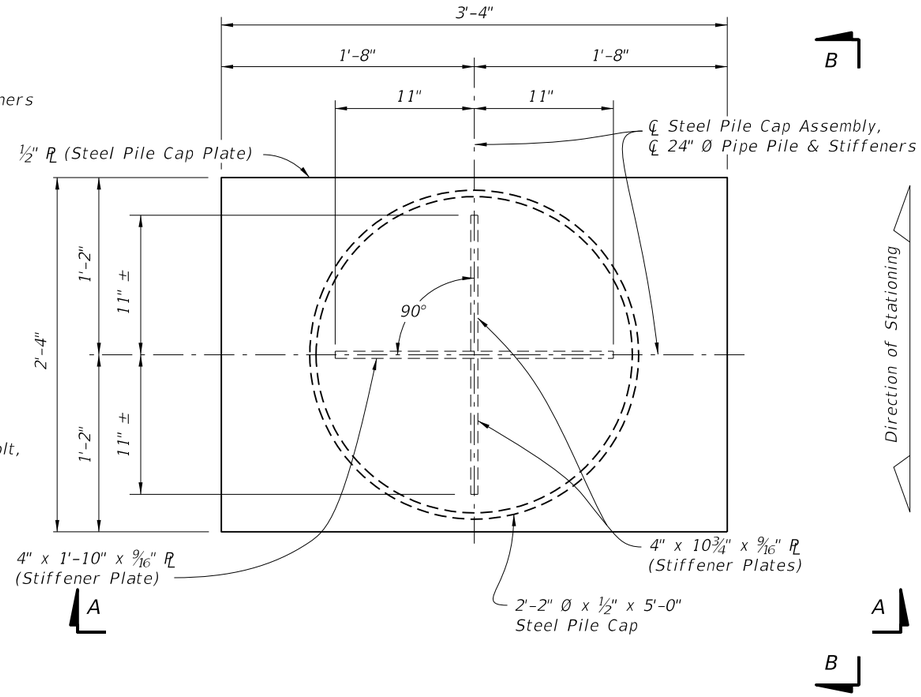

PLAN VIEW STEEL PILE CAP ASSEMBLY
(Bearing Plates and Bearing Keeper Bars not show for clarity)

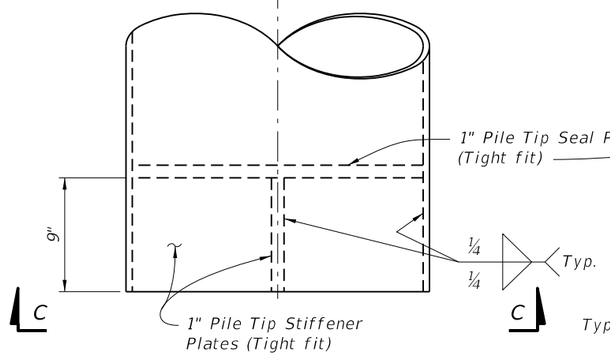

VIEW B-B

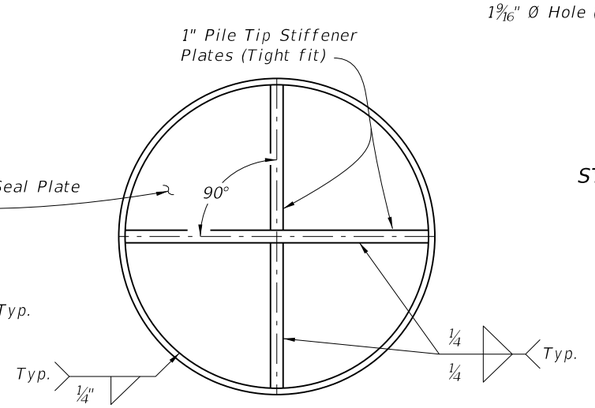

VIEW C-C
PILE TIP DETAIL

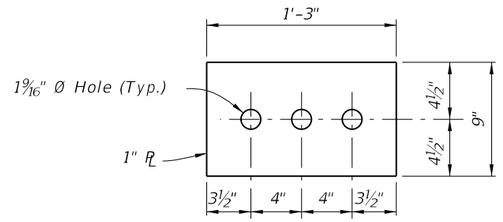

STRUT CONNECTOR PLATE DETAIL

C:\d\projects\standards\structures\2013book\21630-1of3.dgn
6/28/2012 2:25:41 PM rd960rh

LAST REVISION	REVISION	DESCRIPTION:				
07/01/06			FDOT DESIGN STANDARDS 2013	TEMPORARY DETOUR BRIDGE DETAILS - STEEL PIPE PILE FOUNDATIONS	INDEX NO. 21630	SHEET NO. 1

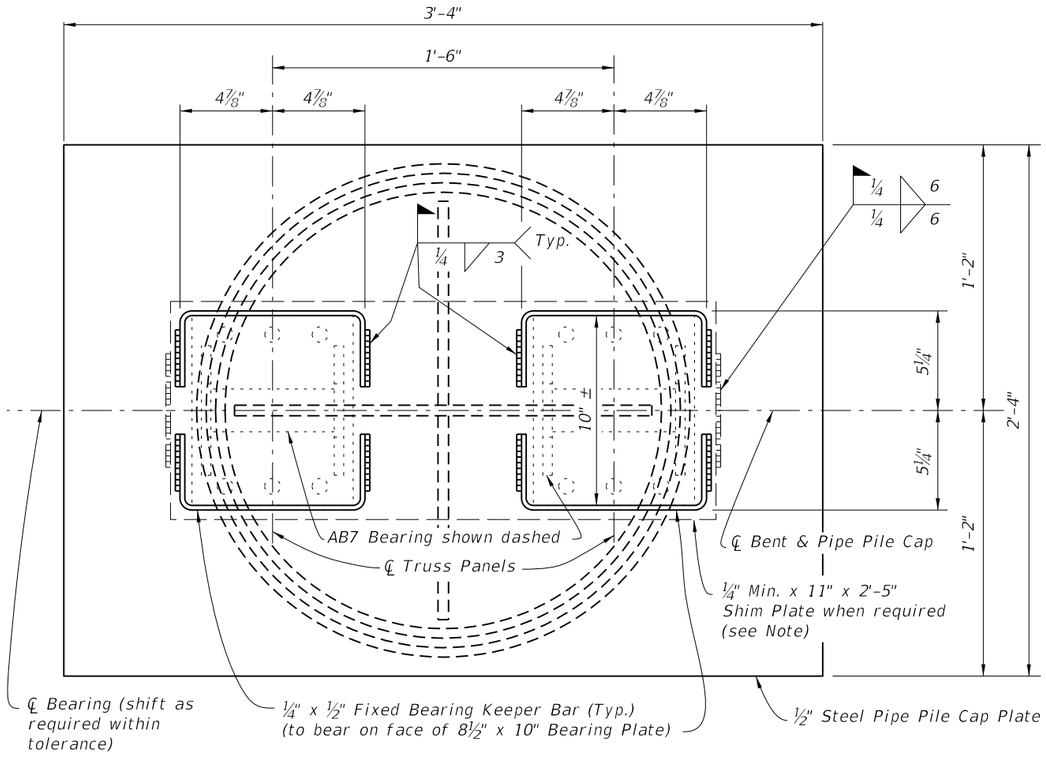

PARTIAL PLAN VIEW

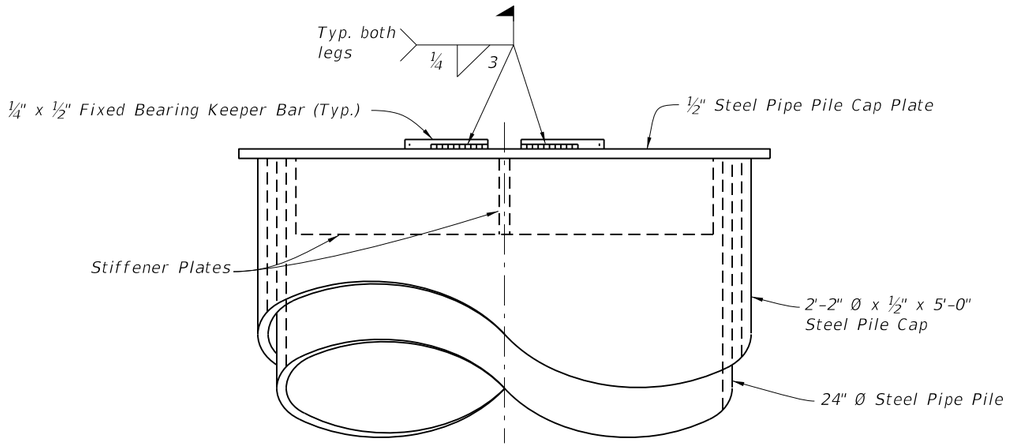

END VIEW

Note:
Use Shim Plates as required to provide equal bearing seat elevations across the bent. Vary thickness of Shim Plate across the pile cap plate to provide a level bearing area in the transverse direction.

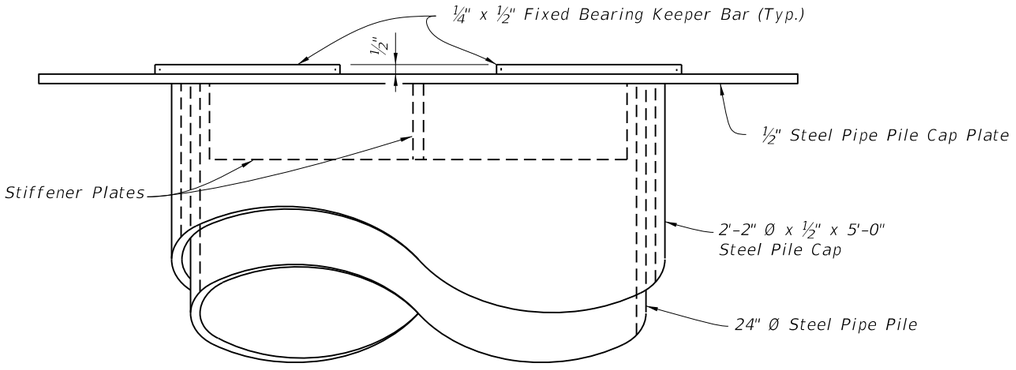

PARTIAL ELEVATION VIEW

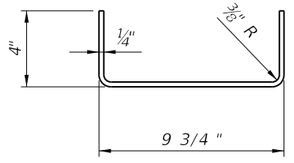

FIXED BEARING
KEEPER BAR DETAIL

FIXED BEARING DETAILS

C:\d\projects\standards\structures\2013book\21630-2of3.dgn
rd960rh
2:25:43 PM
6/28/2012

LAST REVISION	REVISION	DESCRIPTION:				
07/01/06			FDOT DESIGN STANDARDS 2013	TEMPORARY DETOUR BRIDGE DETAILS - STEEL PIPE PILE FOUNDATIONS	INDEX NO. 21630	SHEET NO. 2

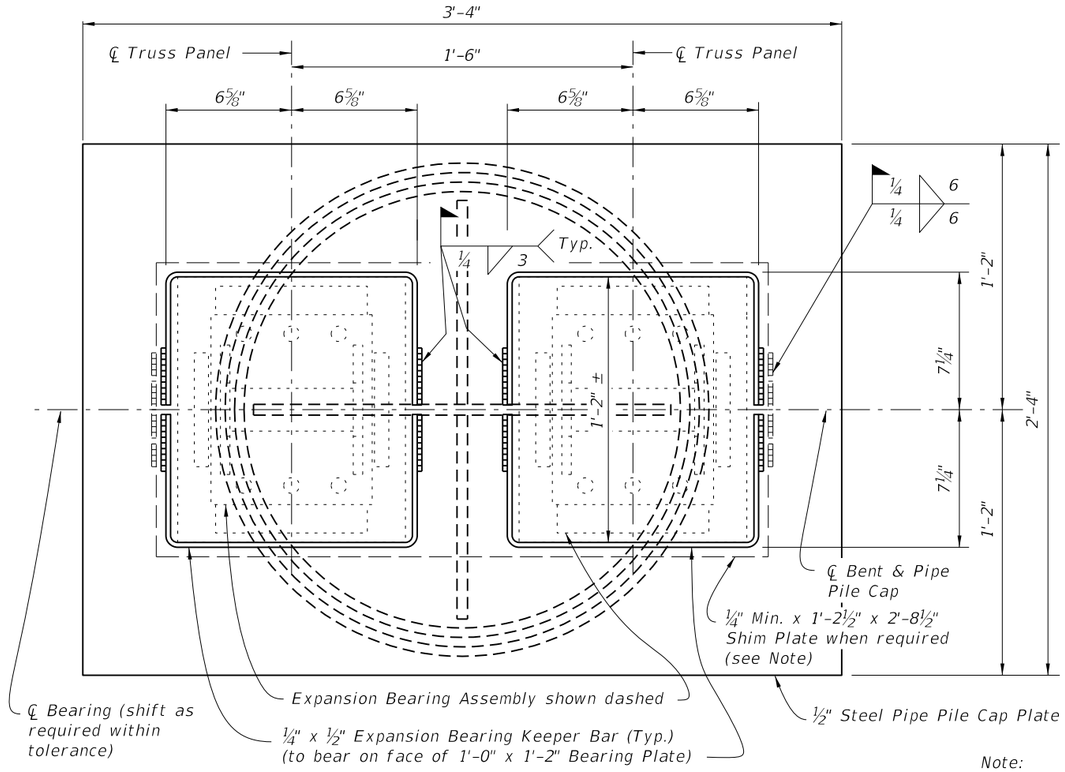

PARTIAL PLAN VIEW

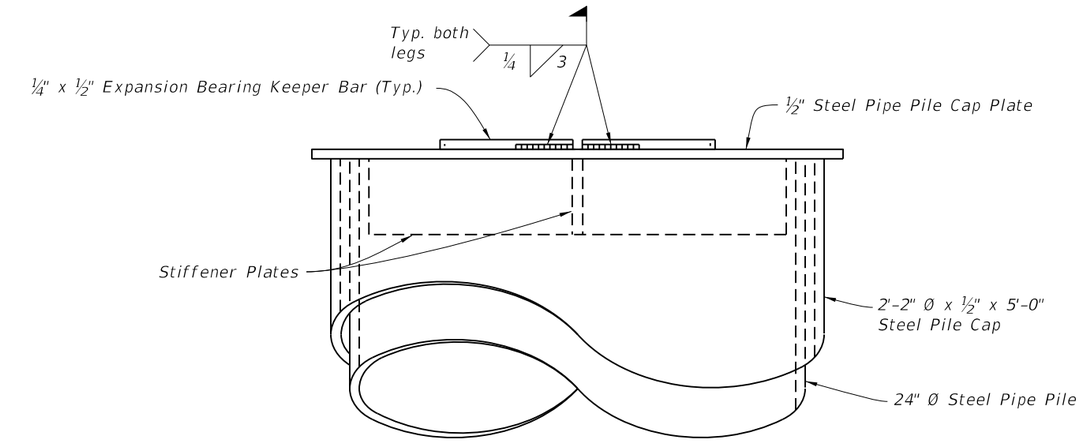

END VIEW

Note:
Use Shim Plates as required to provide equal bearing seat elevations across the bent. Vary thickness of Shim Plate across the pile cap plate to provide a level bearing area in the transverse direction.

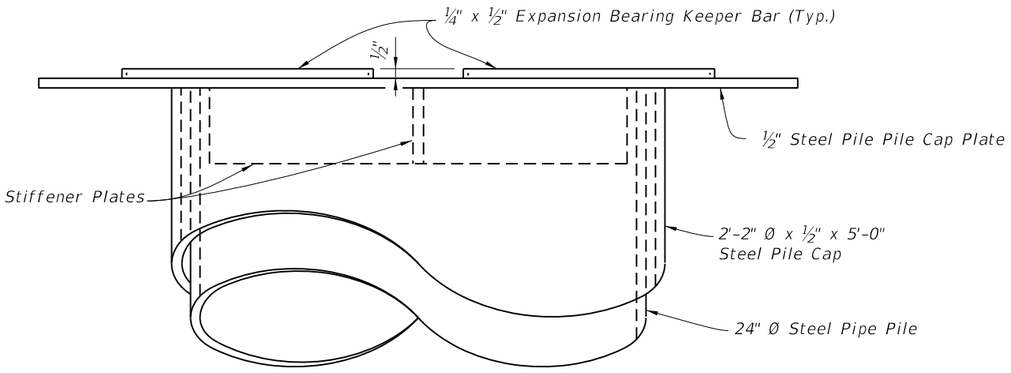

PARTIAL ELEVATION VIEW

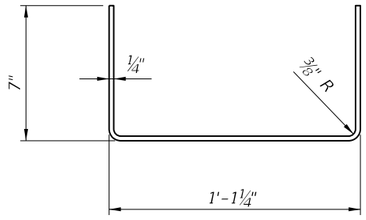

EXPANSION BEARING KEEPER BAR DETAIL

ABUTMENT AND INTERMEDIATE EXPANSION BEARING DETAILS

6/28/2012 2:25:46 PM rd960rh C:\d\projects\standards\structures\2013book\21630-3of3.dgn

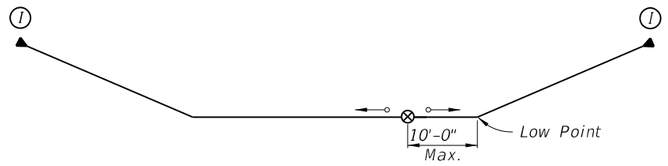

Profile 1

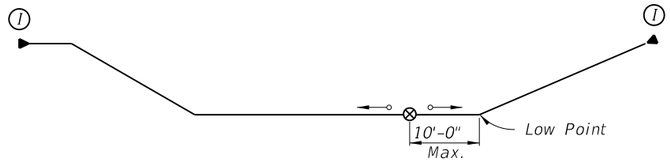

Profile 2

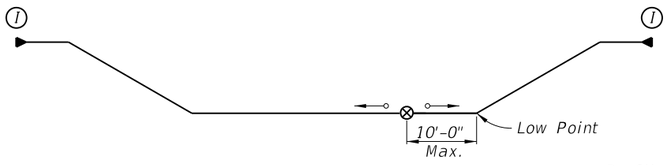

Profile 3

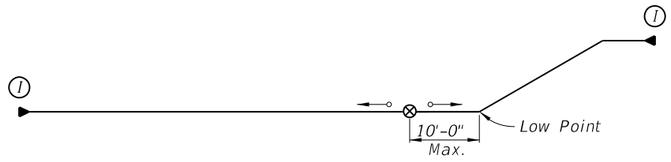

Profile 4

Profile 5

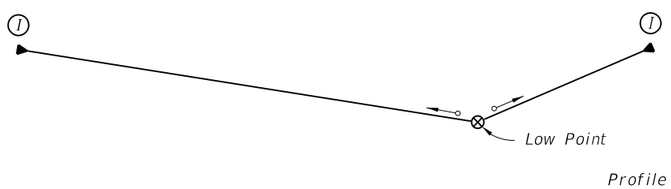

Profile 6

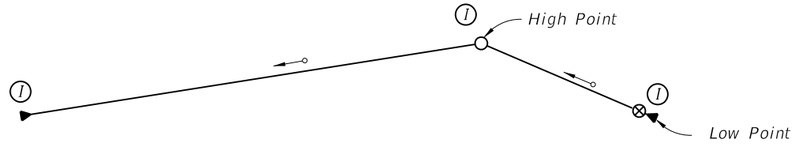

Profile 7

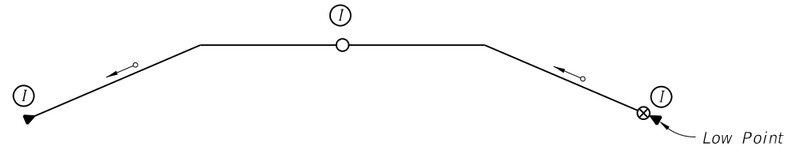

Profile 8

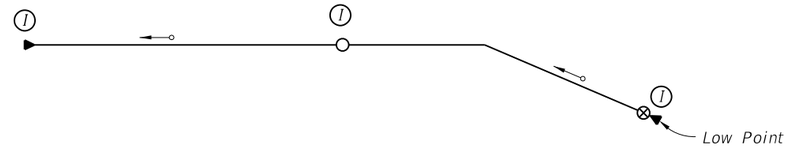

Profile 9

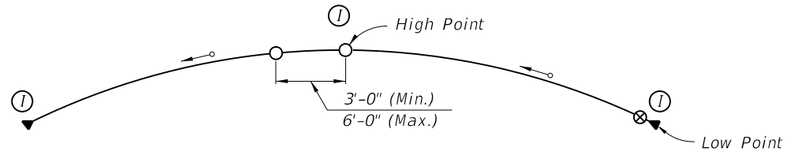

Profile 10

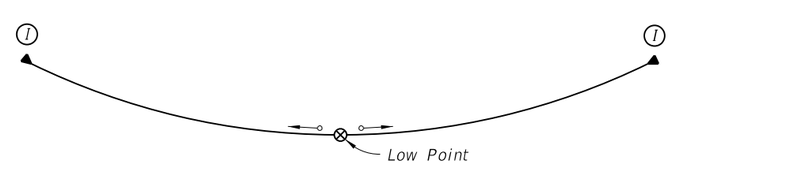

Profile 11

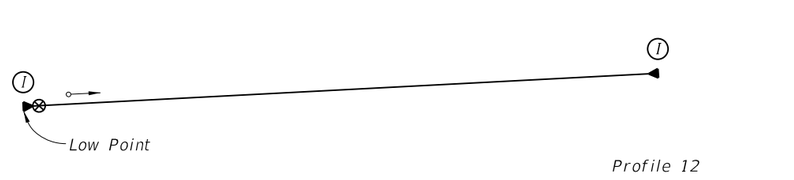

Profile 12

General Notes:

1. The details shown on Indices No. 21801, 21802, and 21803 depict the final condition of the post-tensioning system. The standards assume certain methods to obtain the required final condition. The Contractor may elect to modify these methods with the approval of the Engineer of Record provided the post-tensioning system is protected from contamination during all intermediate steps and the final condition conforms with the requirements of the Contract Documents.

2. See Specifications for grouting procedures, and post-tensioning systems.

3. See Specifications for surface preparation and other details of the epoxy grout pour-backs (Post-Tensioning).

4. See Specifications for surface preparation and other details of the elastomeric coating (Elastomeric Coating System).

5. See Specifications for surface preparation and other details of the Magnesium Ammonium Phosphate Concrete (Magnesium Ammonium Phosphate Concrete) (MAPC).

6. If deviations from these standard methods are proposed, the Contractor shall demonstrate through a mock-up or other methods that his proposed grouting plan adequately fulfills the requirement of fully grouted tendons.

7. The Contractor shall attach pressure gauges to all grout inlets during the grouting operation. Locations of all pressure gauges shall be noted on the grouting operations plan.

8. The grout outlets shown shall be adjusted to accommodate the true high point of the tendon in the completed structure.

9. All grout inlets / outlets are to be sealed using threaded plugs with the exception of inlets / outlets exiting to a vertical face or exiting from the bottom of the bottom soffit.

10. All grout inlets / outlets exiting on vertical surfaces shall be directed toward the inside face of exterior girders or toward the interior of cellular boxes.

11. See Index No. 21802 for "POST-TENSIONING ANCHORAGE PROTECTION".

12. See Index No. 21803 for "POST-TENSIONING ANCHORAGE AND GROUTING DETAILS".

Legend:

- Strand Tendon
- End Anchor with Grout Outlet
- Grout Inlet
- Grout Outlet
- Optional Grout Outlet
- Drain / Grout Inlet
- Direction of Grout Flow
- Inspection Location

C:\d\projects\standards\structures\2013book\21801-1of2.dgn rd960rh 2:25:48 PM 6/28/2012

LAST REVISION	REVISION	DESCRIPTION:				
07/01/05			FDOT DESIGN STANDARDS 2013	POST-TENSIONING VERTICAL PROFILES	INDEX NO. 21801	SHEET NO. 1

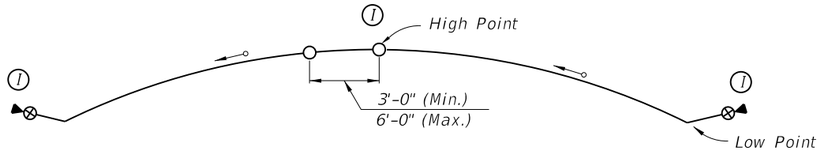

Profile 13

Post-Tensioning Vertical Profiles for Staged Grouting

(Simultaneous Low Point Grouting through a Manifold is not Permitted)

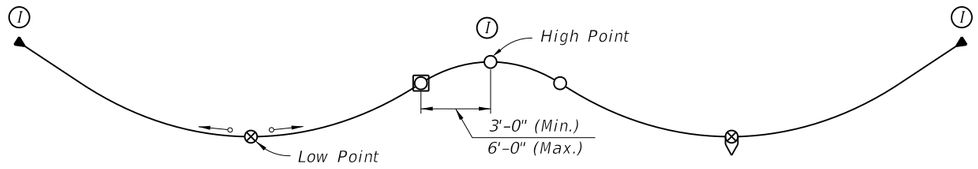

Profile 14

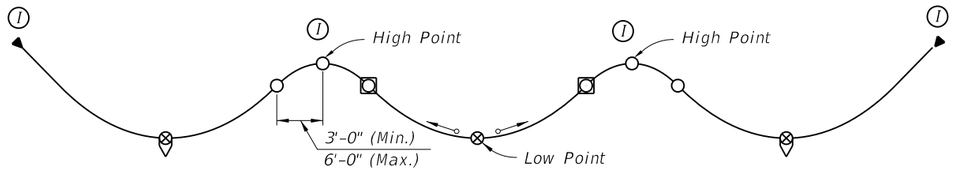

Profile 15

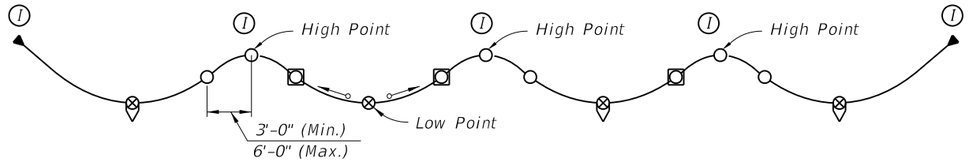

Profile 16

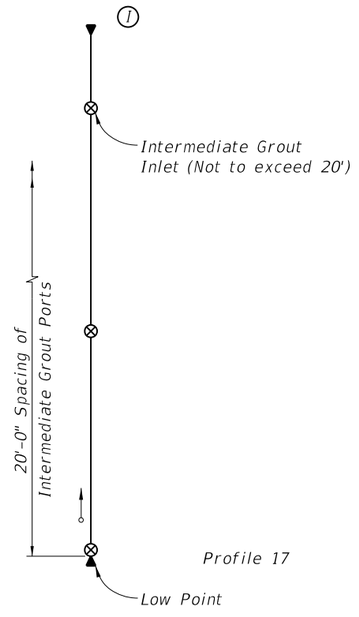

Profile 17

NOTES: Grouting Procedures

1. *Take into account longitudinal grade, if any, and establish direction of grouting.*
2. *Orient end anchors so that grout outlet is at the top.*
3. *Provide grout outlets at all anchors.*
4. *Provide grout inlet at low point of all tendon profiles.*
5. *For tendons longer than 150 feet, additional grout outlets are required.*
6. *Incorporate the information on these drawings into the grouting operations plan.*
7. *In the grouting plan, show*
   a. *Direction of grouting*
   b. *Locations of grout inlets & outlets*
   c. *Staged grouting operations*
   d. *Sequence of opening & closing vents*
   e. *Procedures for time delayed grout phasing of the tendons.*
8. *After grouting, inspect all anchors and high points for voids.*
9. *Vacuum grout voids and seal post-tensioning system in accordance with the specifications.*

Legend:

- *Strand Tendon*
- *End Anchor with Grout Outlet*
- *Grout Inlet*
- *Grout Outlet*
- *Optional Grout Outlet*
- *Drain / Optional Grout Inlet*
- *Direction of Grout Flow*
- *Inspection Location*

LAST REVISION	REVISION	DESCRIPTION:		FDOT DESIGN STANDARDS 2013	POST-TENSIONING VERTICAL PROFILES	INDEX NO.	SHEET NO.
07/01/05						21801	2

6/28/2012 2:25:50 PM rd960rh C:\d\projects\standards\structures\2013book\21801-2of2.dgn

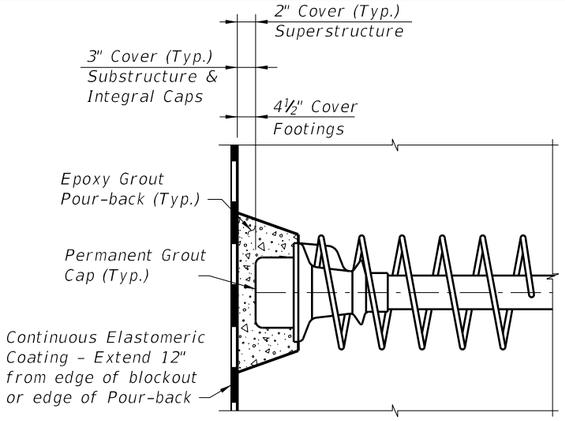

TYPE 1

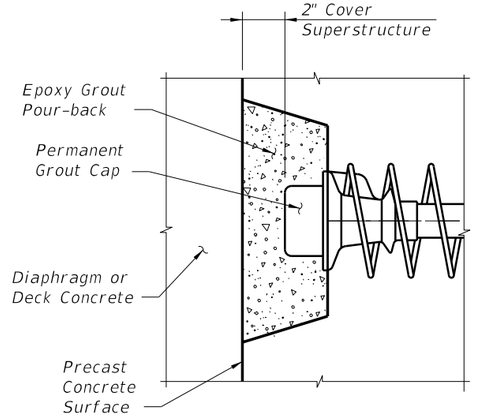

TYPE 2

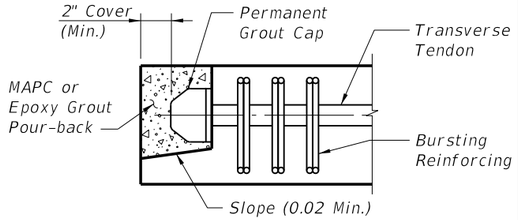

TYPE 7

Type 7 Notes:
1. Traffic or Pedestrian/Bicycle Railing not shown for Clarity.
2. Where Pour-back is not protected by Traffic or Pedestrian/Bicycle Railing, Coat Pour-back with High Molecular Weight Methacrylate.

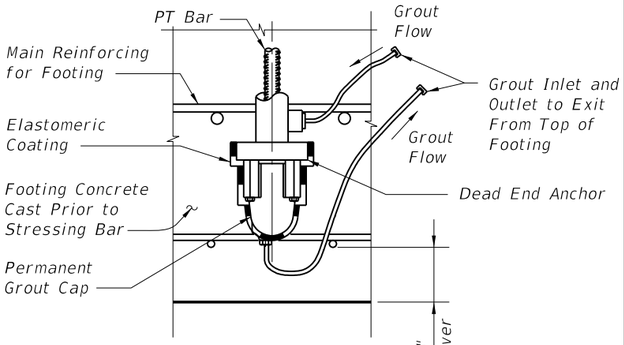

TYPE 8

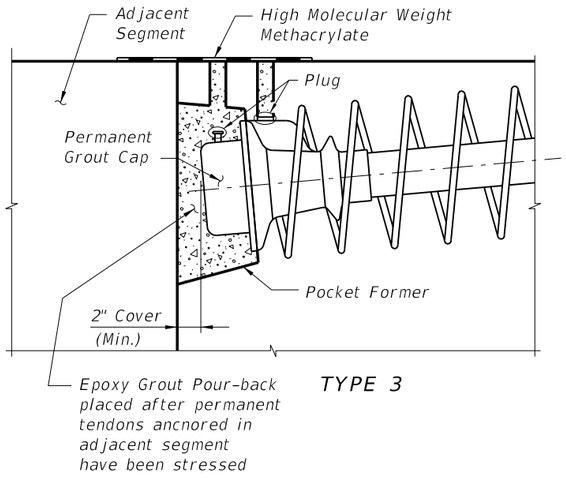

TYPE 3

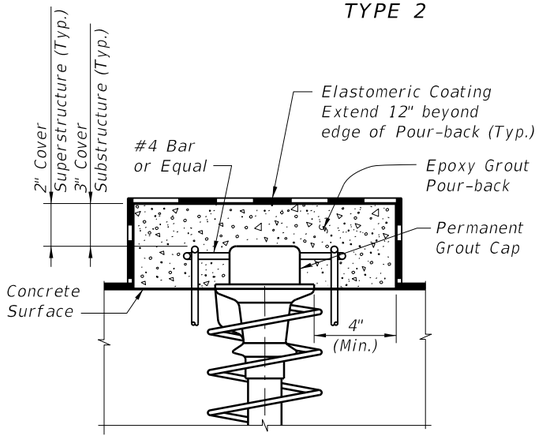

TYPE 4

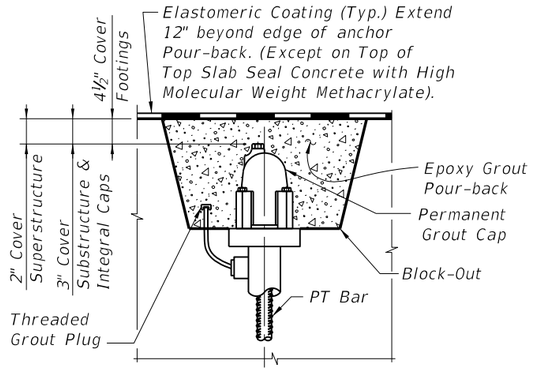

TYPE 9

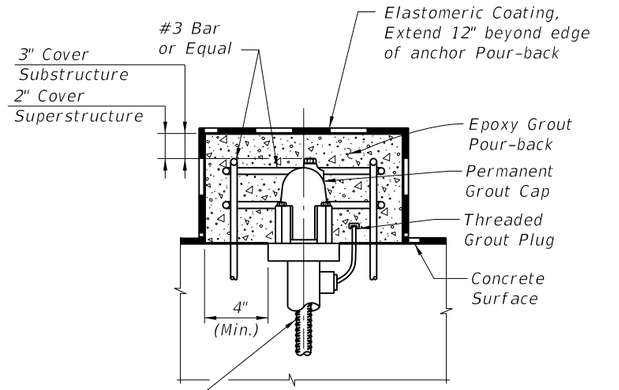

TYPE 10

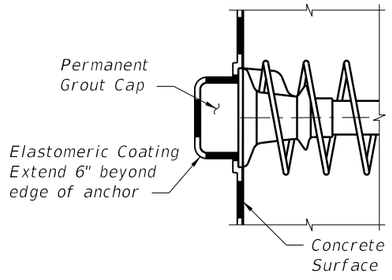

TYPE 5

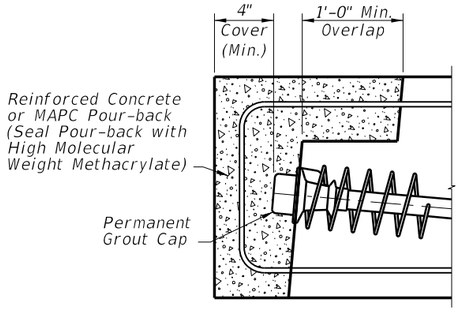

TYPE 6

ANCHOR PROTECTION FOR PT TENDONS

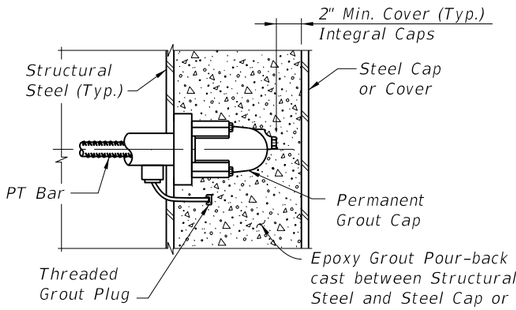

TYPE 11
(Shear Studs not Shown for Clarity)

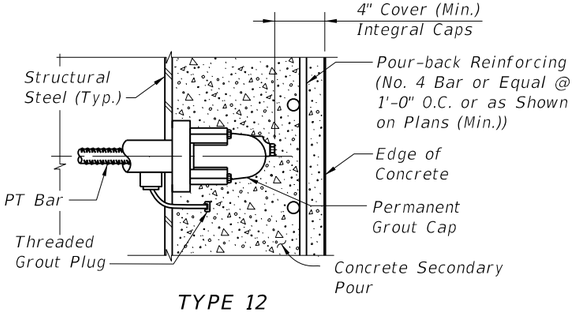

TYPE 12
(Shear Studs not Shown for Clarity)

ANCHOR PROTECTION FOR PT BARS

LAST REVISION	REVISION	DESCRIPTION:			INDEX NO.	SHEET NO.
01/01/12			FDOT DESIGN STANDARDS 2013	POST-TENSIONING ANCHORAGE PROTECTION	21802	1

C:\d\projects\standards\structures\2013book\21802-1of1.dgn rd960rh 2:25:53 PM 6/28/2012

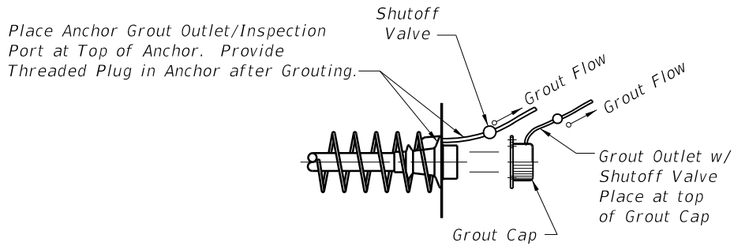

FACE INSPECTED
ANCHOR WITH GROUT OUTLET

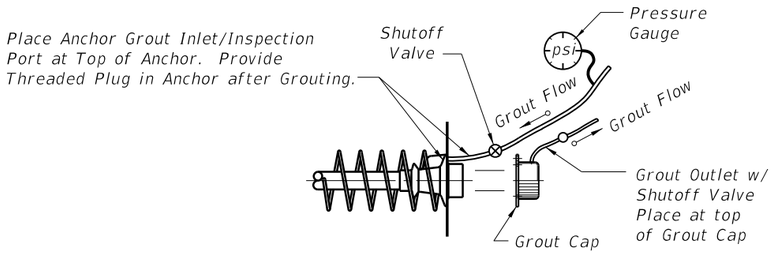

FACE INSPECTED
ANCHOR WITH GROUT INLET

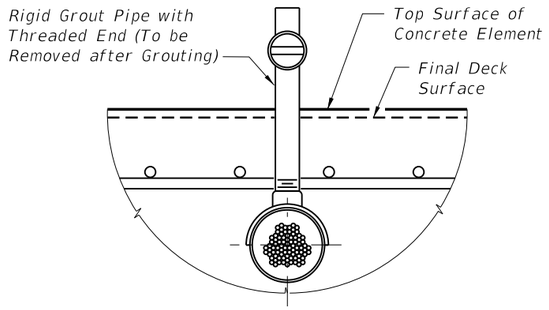

1 GROUT OUTLET CONNECTION TO TENDON

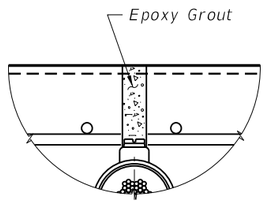

3 FILLING POCKET

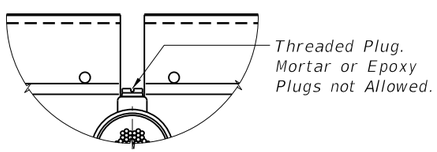

2 POCKET PREPARATION

PROCEDURE:

1. Remove Rigid Grout Pipe.
2. Inspect Tendon for Voids as Necessary.
3. Vacuum Grout as Required and Allow Grout to Cure. Remove Pipe used for Vacuum Grouting.
4. Clean Threads and Rethread as Required.
5. Install Threaded Plug into Outlet to Form a Tight Fit.
6. Over-Ream Hole (¼" Ø Over-Ream) Clean and Roughen Sides.
7. Fill Pocket with Epoxy Grout.

GROUT OUTLET DETAIL AT HORIZONTAL SURFACES

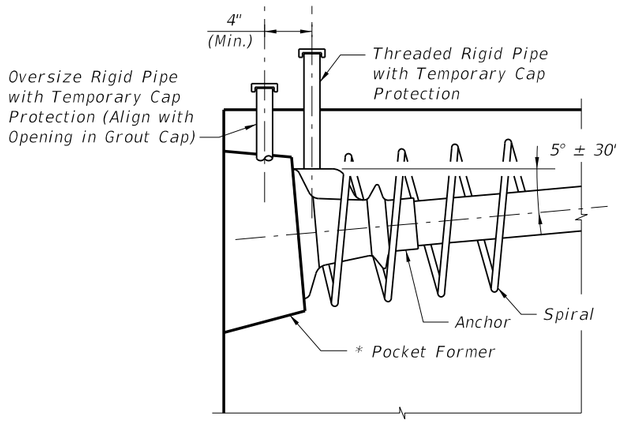

1 INSTALLATION & SHIPPING

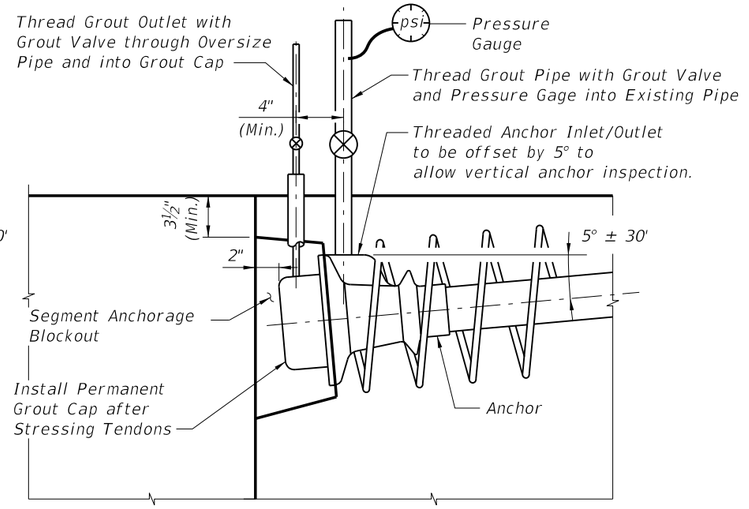

2 GROUTING

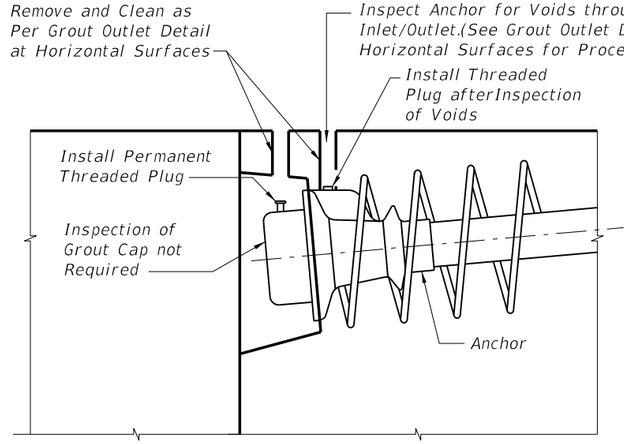

3 INSPECTION

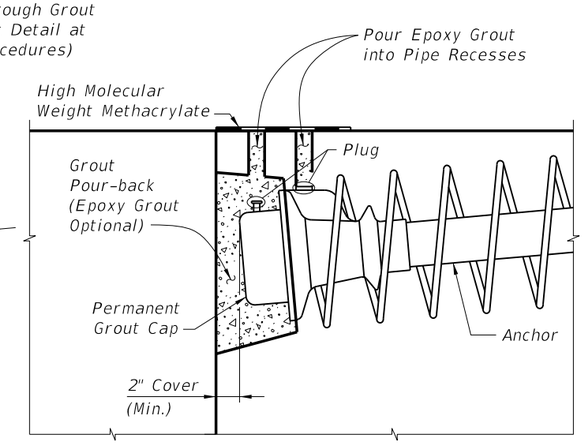

4 PROTECTION

NOTES:

1. Holes used for the Inspection and Grout Inlets/Outlets may be Formed using Tapered Pipes or Mandrels.

TOP INSPECTED ANCHOR WITH GROUT INLET
INSTALLATION, GROUTING, INSPECTION & PROTECTION

* Round ◯ Pocket Former – Gravity Fed Placement of Grout Acceptable
Modified Square ⬠ Pocket Former – Gravity Fed Placement of Grout Acceptable
Square □ Pocket Former – Vacuum Grouting Required

LAST REVISION	REVISION	DESCRIPTION:				
01/01/11			FDOT DESIGN STANDARDS 2013	POST-TENSIONING ANCHORAGE AND GROUTING DETAILS	INDEX NO. 21803	SHEET NO. 1

C:\d\projects\standards\structures\2013book\21803-1of3.dgn
rd960rh
2:25:55 PM
6/28/2012

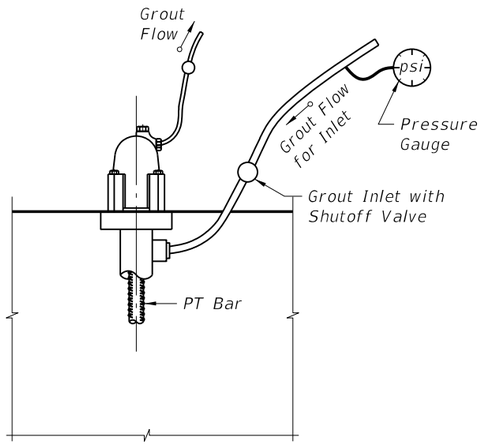

INLET END

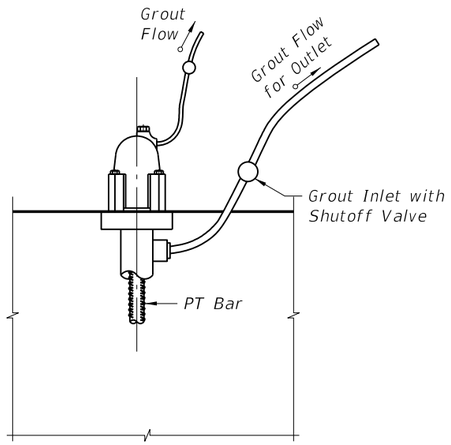

OUTLET END

NOTE:
Anchor or Nut to allow for Flow of Grout into Cap.

GROUT INLET AND OUTLET DETAILS FOR PT BARS

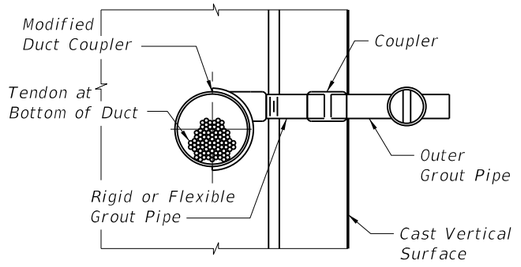

1 GROUT OUTLET CONNECTION TO TENDON

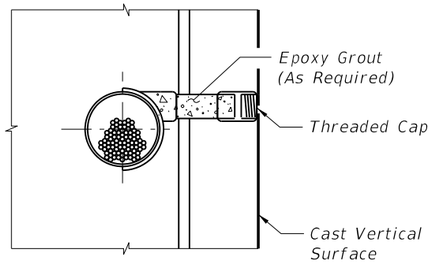

3 FILLING POCKET

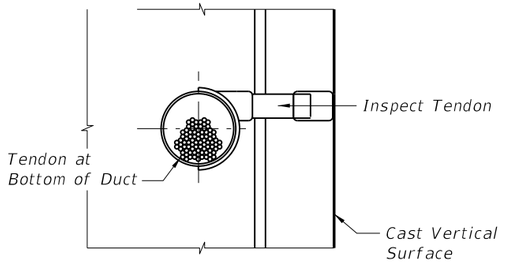

2 POCKET PREPARATION

PROCEDURE:

1. Remove Rigid Grout Pipe.
   or Drill Grout in Flexible Pipe.
2. Inspect Tendon for Voids as Necessary.
3. Vacuum Grout as Required and Allow
   Grout to Cure for 24 hr. (Min.).
   Remove Pipe used for Vacuum Grouting.
4. Plug Recess with Threaded Cap on Inside Surfaces
   of Box Sections and Inside (non-fascia) Surfaces
   of I-Girders. For all other Surfaces, Plug
   Recess with both Threaded Cap and Epoxy Grout.

GROUT OUTLET DETAIL AT VERTICAL SURFACES

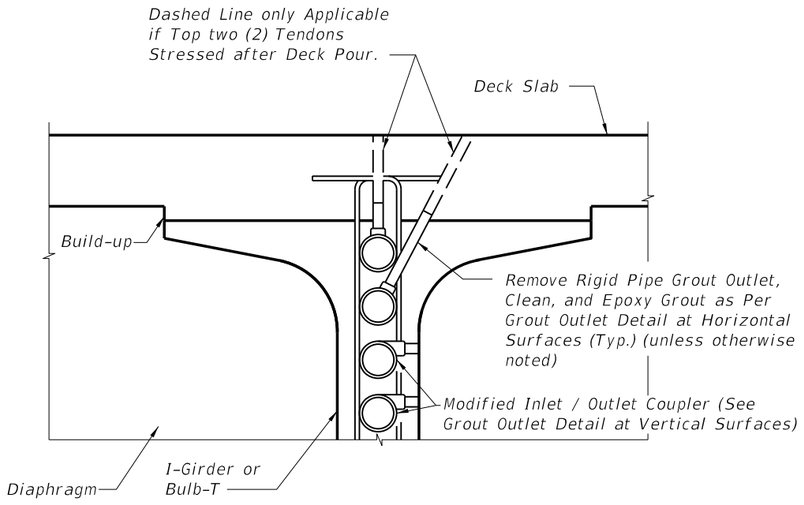

HIGH POINT INSPECTION
LOCATION AT GROUT OUTLET

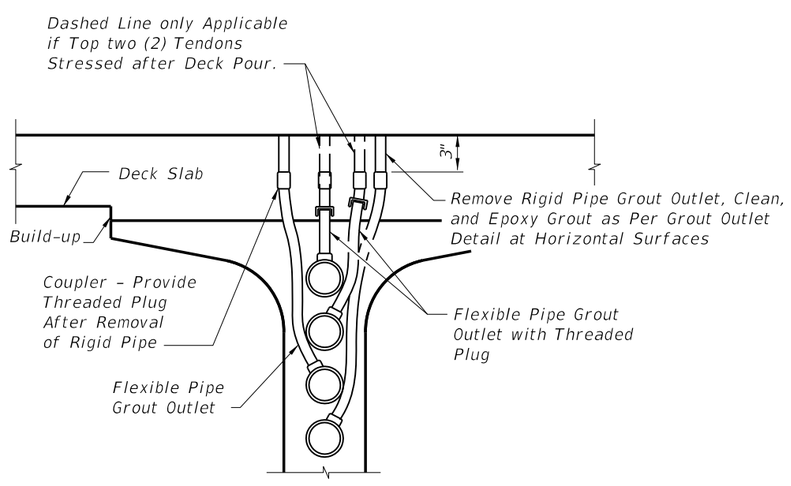

TENDONS AT 3' TO 6'
FROM HIGH POINTS (GROUT OUTLET)

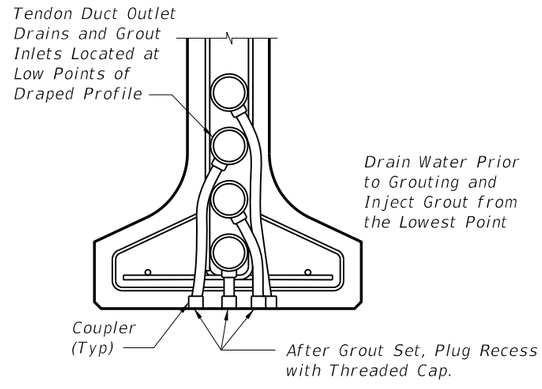

TENDONS AT LOW POINTS
(GROUT INLET / DRAIN)

GROUT INLET AND OUTLET DETAILS FOR I-GIRDERS/BULB-T'S

Details for C-I-P Boxes with Internal Tendons Similar. Web Reinforcing not Shown for Clarity.

LAST REVISION	REVISION	DESCRIPTION:				
01/01/11			FDOT DESIGN STANDARDS 2013	POST-TENSIONING ANCHORAGE AND GROUTING DETAILS	INDEX NO. 21803	SHEET NO. 2

C:\d\projects\standards\structures\2013book\21803-2of3.dgn
rd960rh
2:26:00 PM
6/28/2012

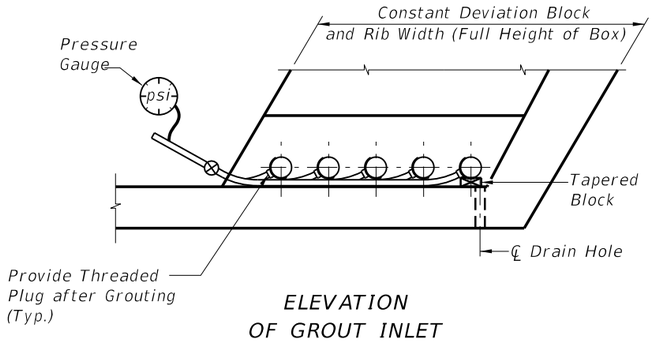

ELEVATION
OF GROUT INLET

NOTES:
Place Tapered Blocks Under Each Tendon to be Grouted to Raise Duct off Tendon Strands. Center Strands within Duct before Grouting Blocks Shall be Removed after Grout has Set. Blocks Shall not Damage or Permanently Deform Duct.

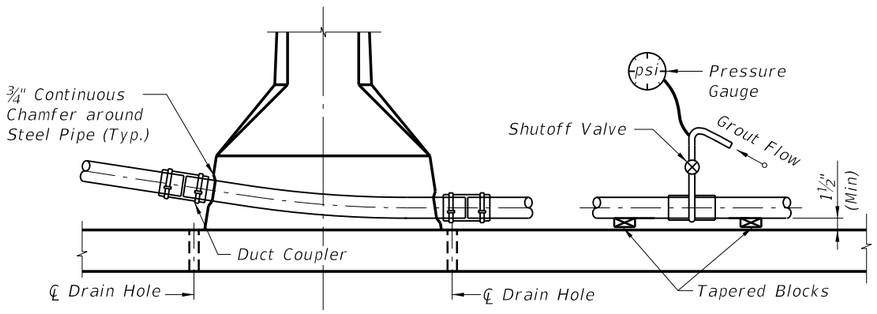

SECTION

GROUTING FOR SPAN BY SPAN CONSTRUCTION

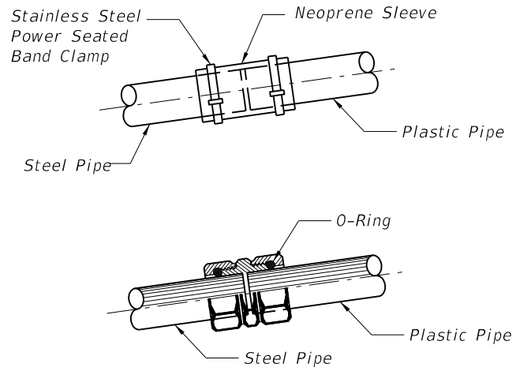

DUCT COUPLER DETAIL

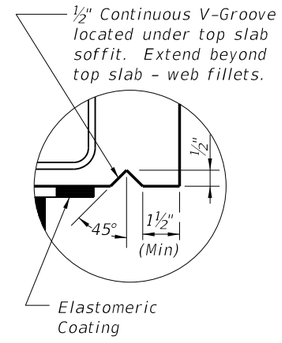

DETAIL OF DRIP
LEDGE AT ABUTMENTS AND
EXPANSION JOINTS FOR SEGMENTAL
AND CAST-IN-PLACE BOX CONSTRUCTION

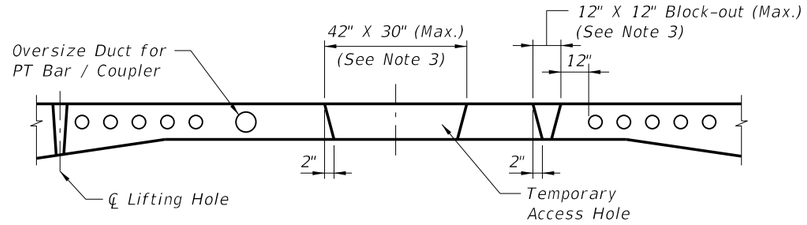

TEMPORARY ACCESS HOLES

Notes: Temporary Access Holes

1. Temporary access holes to facilitate access for erection, jacking and grouting operations inside the box during construction are allowed. The access holes shall be limited to a maximum size of 42" wide x 30" long and shall be limited to one per span.
2. Slab block-outs for temporary / permanent longitudinal post-tensioning bars are not allowed. Temporary/ permanent PT bars in the top slab shall be placed in oversized ducts in the slab to accommodate both the bar and coupler.
3. In lieu of 1 ~ 42" x 30" temporary access hole, a maximum of 2 top slab block-outs (12" x 12" (Max.)) between the webs is allowed for construction per span. Block-outs shall be a minimum of 12" from the nearest duct or anchor and shall be located as to prevent direct drip onto bottom slab anchors.

Notes: Repair of Temporary Access Holes,
Block-outs, and Lifting Holes

1. Form all large block-outs with tapered sides.
2. Immediately before casting the concrete, mechanically clean the mating concrete surfaces to remove any laitance and to expose small aggregate.
3. Repair all holes and block-outs with Magnesium Ammonium Phosphate Concrete within 24 hours of cleaning concrete.
4. After completion of the deck grooving, coat the repaired and surrounding concrete surfaces with High Molecular Weight Methacrylate.
5. Alternately, epoxy grout may be used to repair holes. High Molecular Weight Methacrylate is not required with epoxy grout.

6/28/2012 2:26:03 PM rd960rh C:\d\projects\standards\structures\2013book\21803-3of3.dgn

LAST REVISION	REVISION	DESCRIPTION:				
01/01/11			FDOT DESIGN STANDARDS 2013	POST-TENSIONING ANCHORAGE AND GROUTING DETAILS	INDEX NO. 21803	SHEET NO. 3

GENERAL NOTES:

U.S. COAST GUARD NOTIFICATION: Notify the local office of the U.S. Coast Guard at least 30 days prior to beginning of construction of the Fender System.

POLYMERIC PILES – Provide polymeric piles in accordance with Specification Section 471. Installation shall be in accordance with manufacturer's recommendations. All piles shall be plumb.

PLASTIC LUMBER AND STRUCTURAL COMPOSITE LUMBER WALES: Provide only Plastic Lumber and Structural Composite Lumber Wales in accordance with Specification Section 973. Wales shall be continuous and spliced only at locations shown on the plans.

PLASTIC LUMBER DECKING FOR CATWALKS: Provide Plastic Lumber decking for catwalks when called for in the Plans in accordance with Specification Section 973.

Install Plastic Lumber Decking according to manufacturer's recommendations using stainless steel #10 x 3" (minimum) deck screws.

FIBERGLASS OPEN GRATING FOR CATWALKS: Provide Fiberglass Open Grating for catwalks when called for in the Plans. Fiberglass Open Grating shall be a heavy duty design suitable for exterior installations. Maximum gap opening on the walkway surface shall be 1½". Design live loads and deflections shall be a 50 psf uniformly distributed load with a maximum deflection of ⅜" or L/120 at the center of a simple span and a concentrated load of 250 pounds with a maximum deflection of ¼" at the center of a simple span. Color of Fiberglass Open Grating shall be gray or black.

Install Fiberglass Open Grating according to manufacturer's recommendations using stainless steel hardware, screws, bolts, nuts and washers. Attach Fiberglass Open Grating to Wales and Deck Supports at a 2'-0" maximum spacing so as to resist pedestrian live loads and uplift forces from wind, buoyancy and wave action.

CLEARANCE GAUGE AND LIGHT: Clearance Gauge to be furnished by the FDOT and erected by the Contractor. Clearance Gauge width and numeral height is dependant on visibility distance. The required visibility distance shall be determined by the United States Coast Guard District Commander. Provide and install Clearance Gauge Light in accordance with Specification Section 510 and Index No. 21220.

NAVIGATION LIGHTS: Provide and install Navigation Lights in accordance with Specification Section 510, Index No. 21220 and/or project specific details. Provide and maintain Temporary Navigation Lights during construction until permanent Navigation Lights are operational.

BOLTS, THREADED BARS, NUTS, SCREWS AND WASHERS: Furnish stainless steel Bolts in accordance with ASTM F593 Type 316. Furnish stainless steel Threaded Bars in accordance with ASTM A193 Grade B8M. Furnish stainless steel Nuts in accordance with ASTM F594 Type 316. Furnish stainless steel Screws in accordance with ASTM F593 Type 305. Furnish stainless steel Washers compatible with Bolts, Threaded Rods and Nuts under heads and nuts. Torque Nuts on 1" diameter Bolts and Threaded Bars to 150 lb-ft. Keep threads on Bolts, Threaded Bars and Nuts free from dirt, coarse grime and sand to prevent galling and seizing during tightening.

SPLICE PLATES: Furnish Splice Plates in accordance with ASTM A240 Type 316.

GENERAL NOTES

6/28/2012 2:26:05 PM rd960rh C:\d\projects\standards\structures\2013book\21900-1of7.dgn

LAST REVISION	REVISION	DESCRIPTION:		FDOT DESIGN STANDARDS 2013	FENDER SYSTEM -POLYMERIC PILES	INDEX NO.	SHEET NO.
01/01/12						21900	1

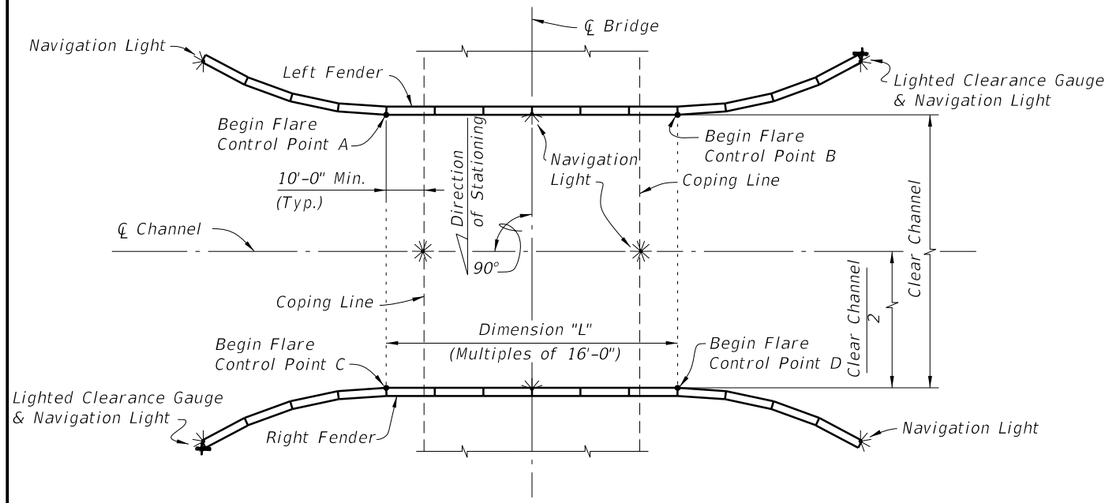

SCHEMATIC OF FENDER SYSTEM SHOWING TREATMENT OF SINGLE FIXED BRIDGE WITH NONSKEWED CHANNEL

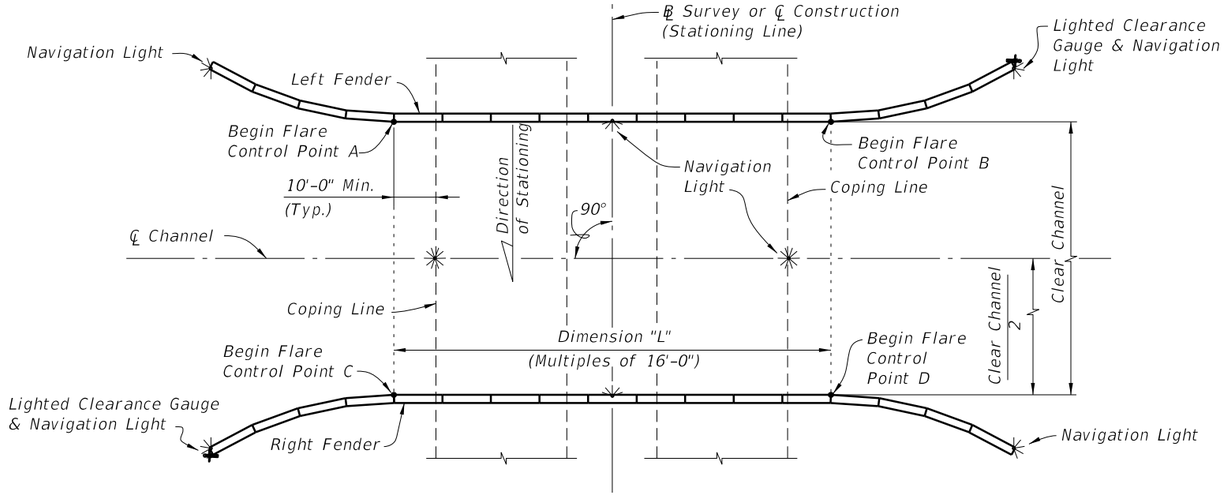

SCHEMATIC OF FENDER SYSTEM SHOWING TREATMENT OF DUAL FIXED BRIDGES WITH NONSKEWED CHANNEL (PARALLEL DUAL FIXED BRIDGES SHOWN, NONPARALLEL DUAL FIXED BRIDGES SIMILAR)

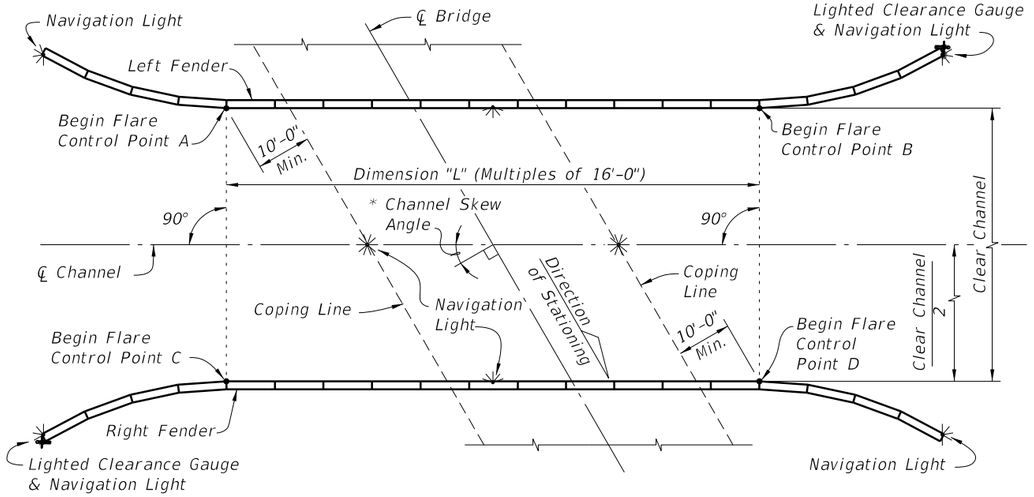

SCHEMATIC OF FENDER SYSTEM SHOWING TREATMENT OF SINGLE FIXED BRIDGE WITH SKEWED CHANNEL

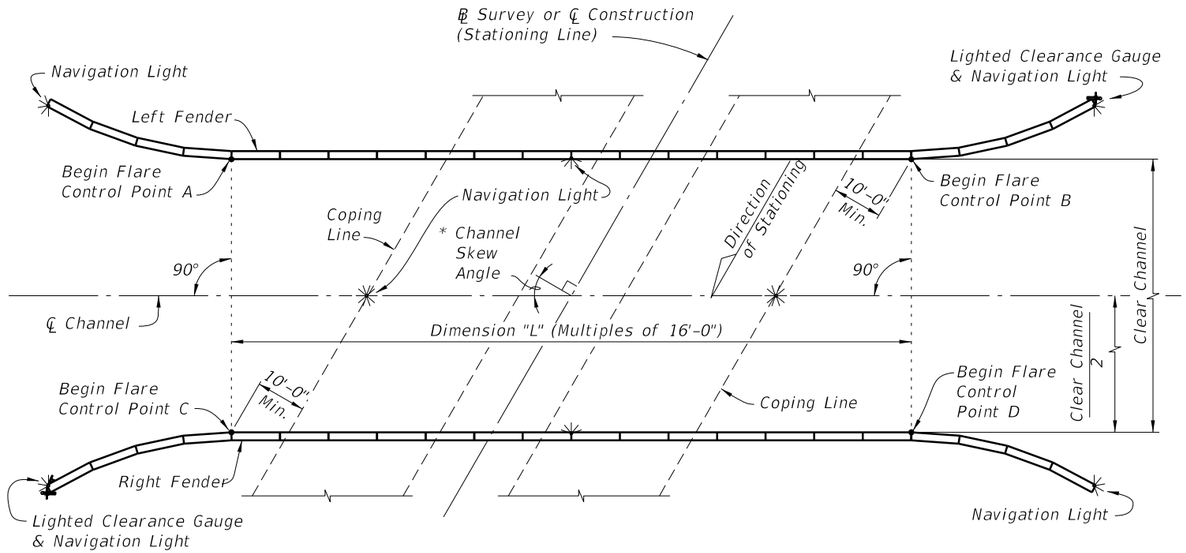

SCHEMATIC OF FENDER SYSTEM SHOWING TREATMENT OF DUAL FIXED BRIDGES WITH SKEWED CHANNEL (PARALLEL DUAL FIXED BRIDGES SHOWN, NONPARALLEL DUAL FIXED BRIDGES SIMILAR)

* See Structures Plans, Plan and Elevation and Foundation Layout Sheets for magnitude and orientation of Channel Skew Angle.

CROSS REFERENCES:
For Stations and Offsets of referenced Control Points A, B, C and D, Dimension "L" and Clear Channel Width see Fender System Table of Variables in Structures Plans.
For Navigation Light Details see Design Standards Index 21220.

LAYOUT GEOMETRY

C:\d\projects\standards\structures\2013book\21900-2of7.dgn
rd960rh
2:26:08 PM
6/28/2012

LAST REVISION	REVISION	DESCRIPTION:				
01/01/12			FDOT DESIGN STANDARDS 2013	FENDER SYSTEM -POLYMERIC PILES	INDEX NO. 21900	SHEET NO. 2

CROSS REFERENCES:

For Sections A–A and B–B see Sheet 4.

For View F–F see Sheet 5.

NOTES:

1. Plastic Lumber and Composite Lumber Dimensions shown are based on Nominal Lumber Dimensions and may vary depending on Actual Lumber Dimension.
2. Pile configuration shown is for example only.
3. Three (3) piles per cluster maximum.
4. Two (2) pile per cluster minimum at 16ft. Panel Joints.
5. Two (2) pile cluster shown, one (1) pile or three (3) pile cluster similar.

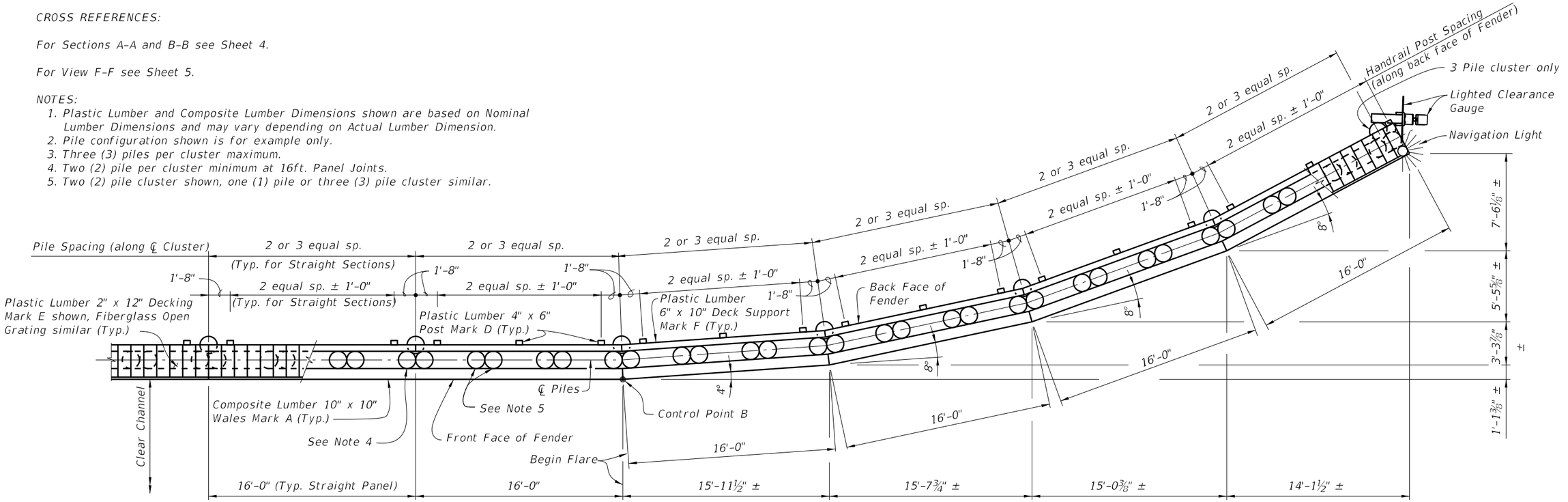

PARTIAL PLAN VIEW (TYPICAL FLARE)
(FLARE AT CONTROL POINT B SHOWN, CONTROL POINTS A, C & D SIMILAR)
(HANDRAIL NOT SHOWN FOR CLARITY)

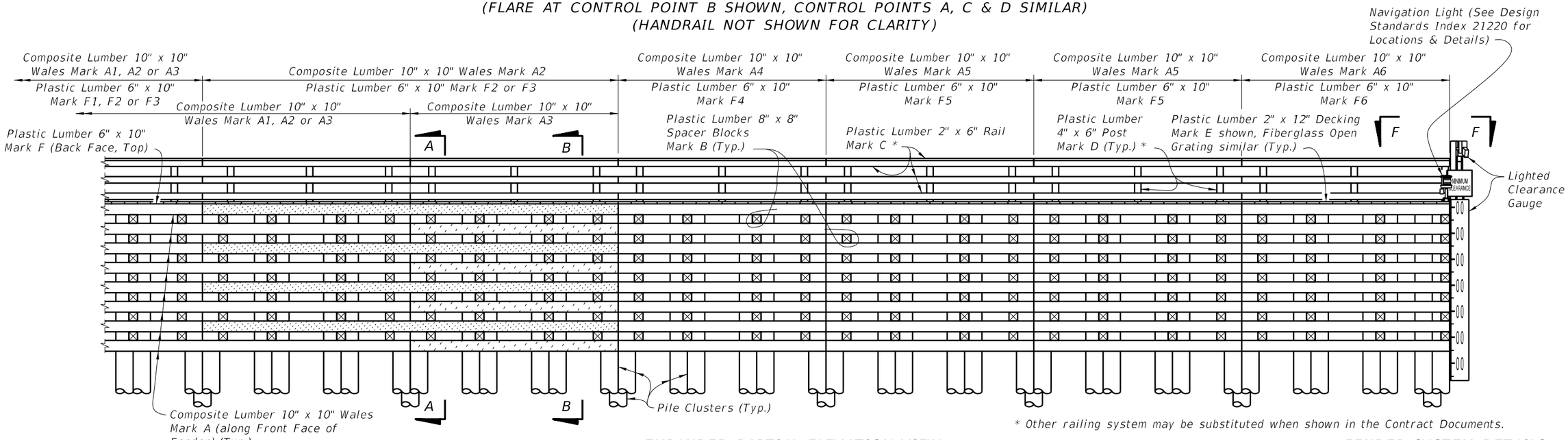

* Other railing system may be substituted when shown in the Contract Documents.

EXPANDED PARTIAL ELEVATION VIEW

FENDER SYSTEM DETAILS

LAST REVISION	REVISION	DESCRIPTION:		FDOT DESIGN STANDARDS 2013	FENDER SYSTEM -POLYMERIC PILES	INDEX NO.	SHEET NO.
01/01/12						21900	3

6/28/2012 2:26:10 PM rd960rh C:\d\projects\standards\structures\2013book\21900-3of7.dgn

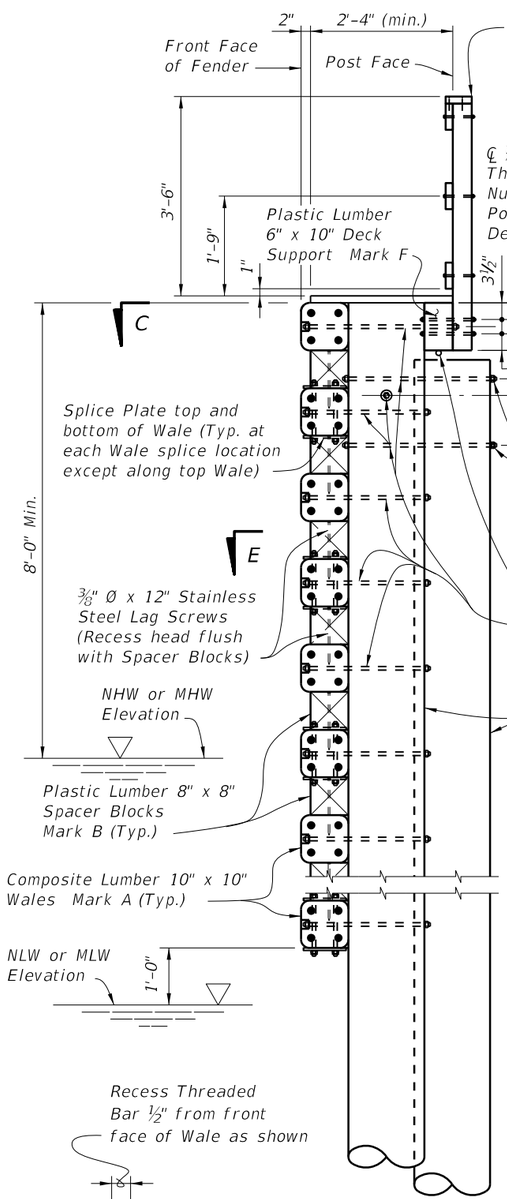

SECTION A-A

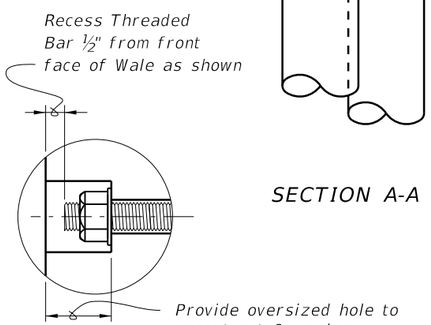

DETAIL "A"

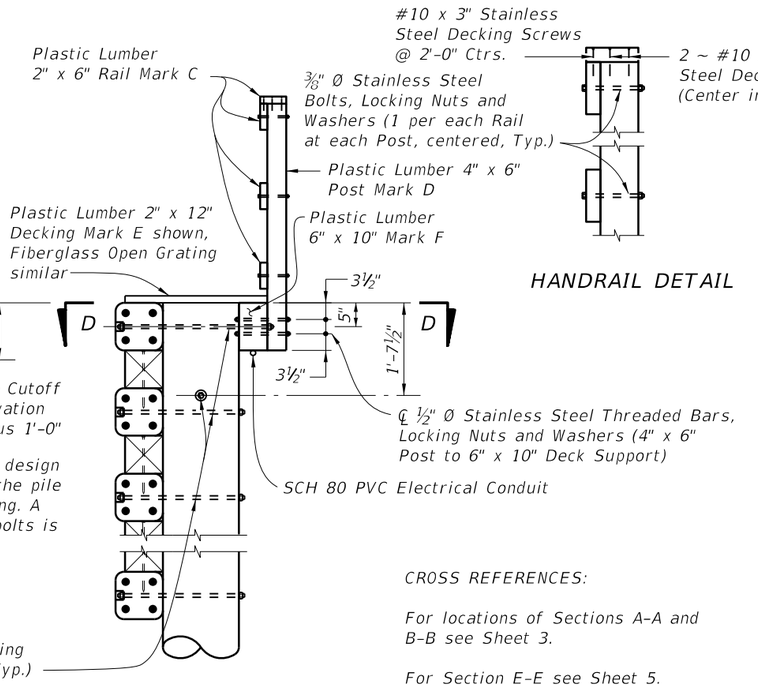

SECTION B-B

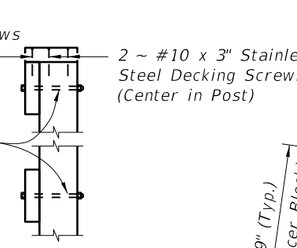

HANDRAIL DETAIL

CROSS REFERENCES:

For locations of Sections A-A and B-B see Sheet 3.

For Section E-E see Sheet 5.

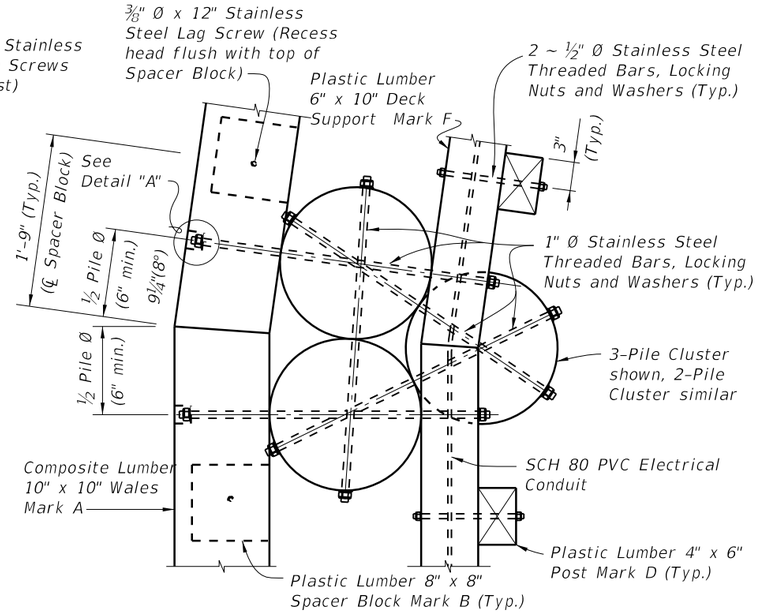

SECTION C-C
TYPICAL FLARED SECTION
(8° TURN SHOWN, 4° TURN SIMILAR)

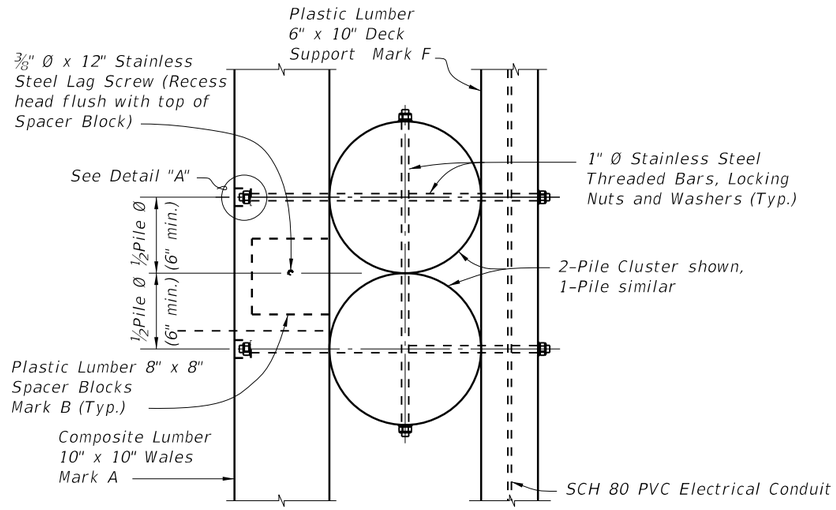

SECTION D-D
TYPICAL AT INTERMEDIATE PILES

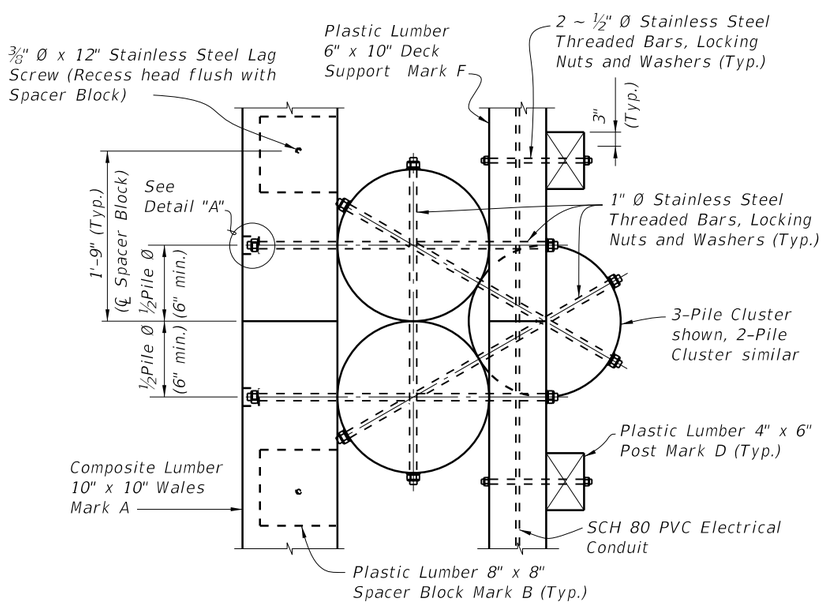

SECTION C-C
TYPICAL STRAIGHT SECTION

FENDER SYSTEM DETAILS

C:\d\projects\standards\structures\2013book\21900-4of7.dgn
rd960rh
2:26:13 PM
6/28/2012

LAST REVISION	REVISION	DESCRIPTION:				
01/01/12			FDOT DESIGN STANDARDS 2013	FENDER SYSTEM -POLYMERIC PILES	INDEX NO. 21900	SHEET NO. 4

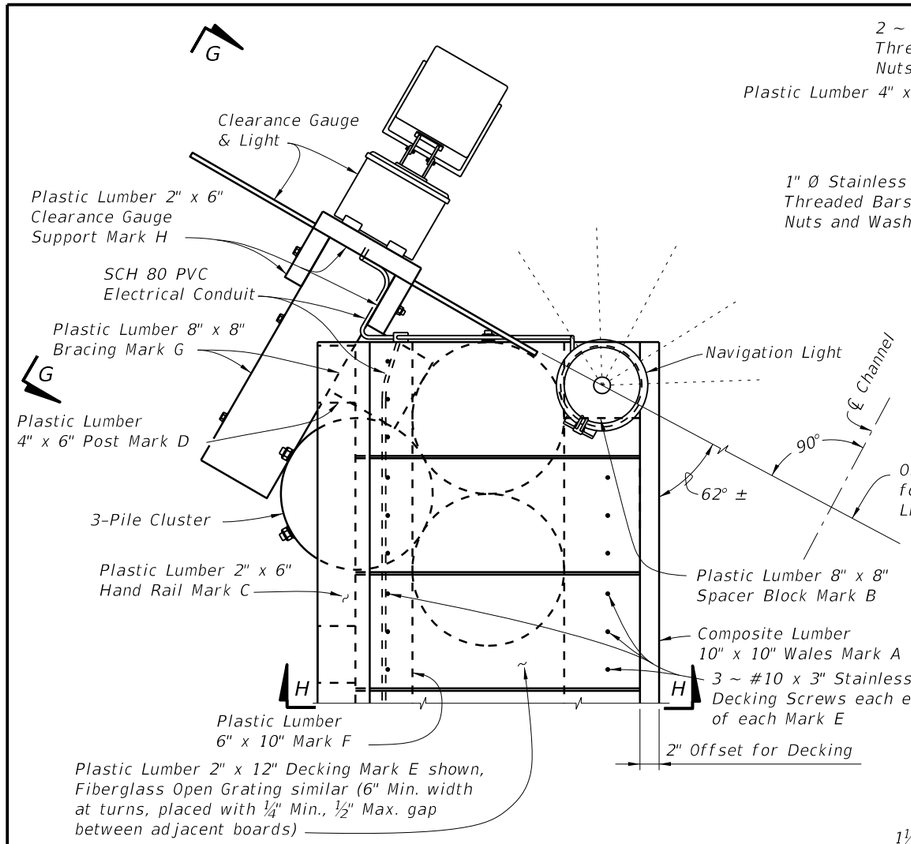

VIEW F-F
(SHOWING FENDER END WITH CLEARANCE GAUGE; FENDER END WITHOUT CLEARANCE GAUGE SIMILAR)

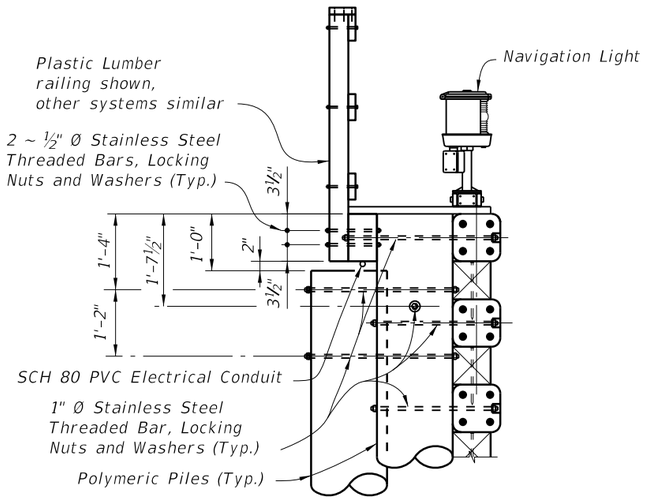

SECTION H-H
(CLEARANCE GAUGE NOT SHOWN FOR CLARITY)

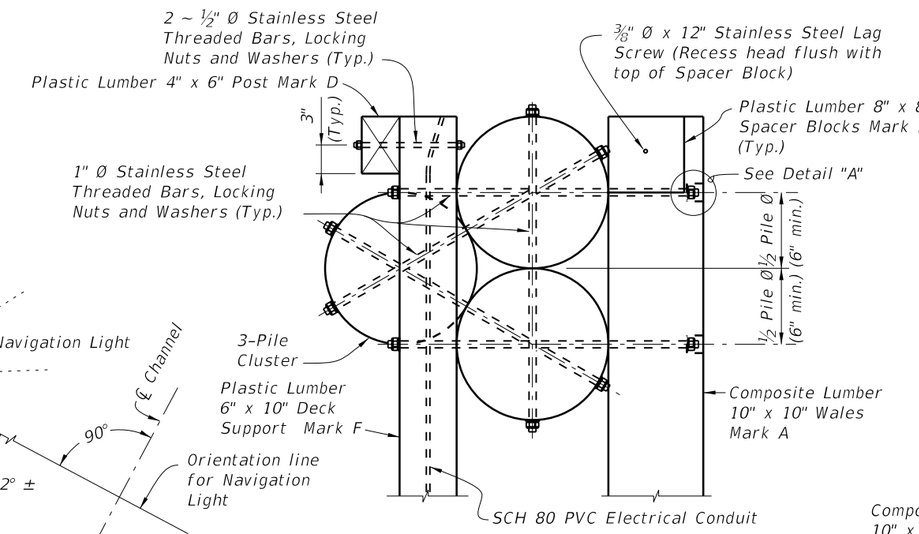

VIEW F-F
(SHOWING FENDER END; DECKING, HANDRAIL AND CLEARANCE GAUGE NOT SHOWN FOR CLARITY)

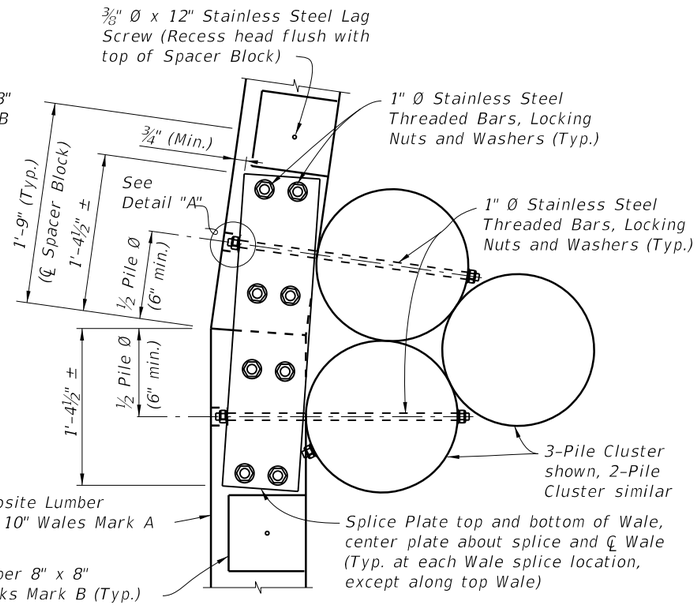

SECTION E-E
TYPICAL FLARED SECTION
(8° TURN SHOWN, 4° TURN SIMILAR)

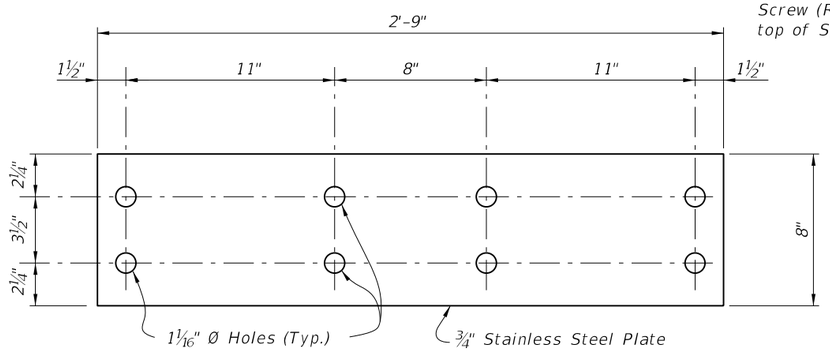

SPLICE PLATE DETAIL

CROSS REFERENCES:

For Navigation Lights and SCH 80 PVC Electrical Conduit Details see Design Standard Index 21220.

For Clearance Gauge Details and View G-G see Sheet 6.

For location of View F-F see Sheet 3.

For location of Section E-E see Sheet 4.

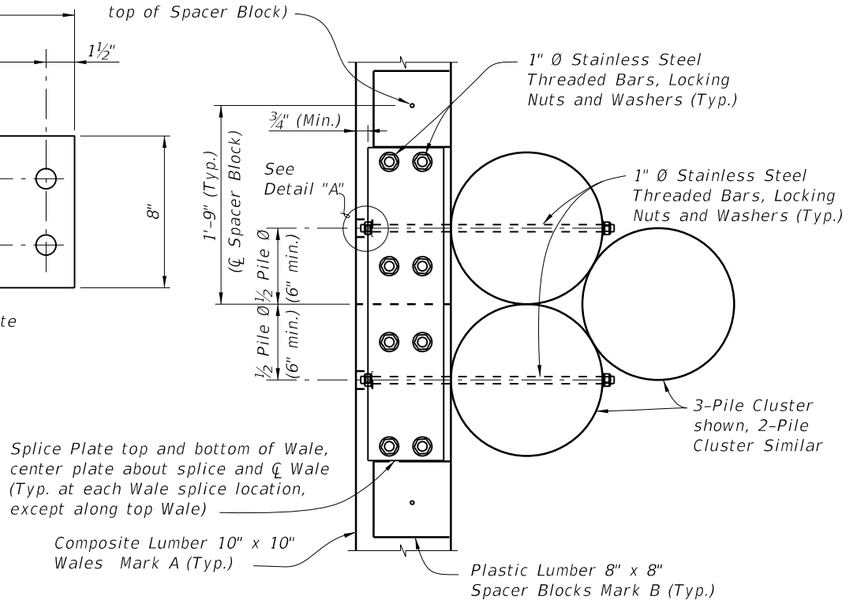

SECTION E-E
TYPICAL STRAIGHT SECTION

FENDER SYSTEM DETAILS

C:\d\projects\standards\structures\2013book\21900-5of7.dgn
rd960rh
2:26:15 PM
6/28/2012

LAST REVISION	REVISION	DESCRIPTION:				
07/01/11			FDOT DESIGN STANDARDS 2013	FENDER SYSTEM -POLYMERIC PILES	INDEX NO. 21900	SHEET NO. 5

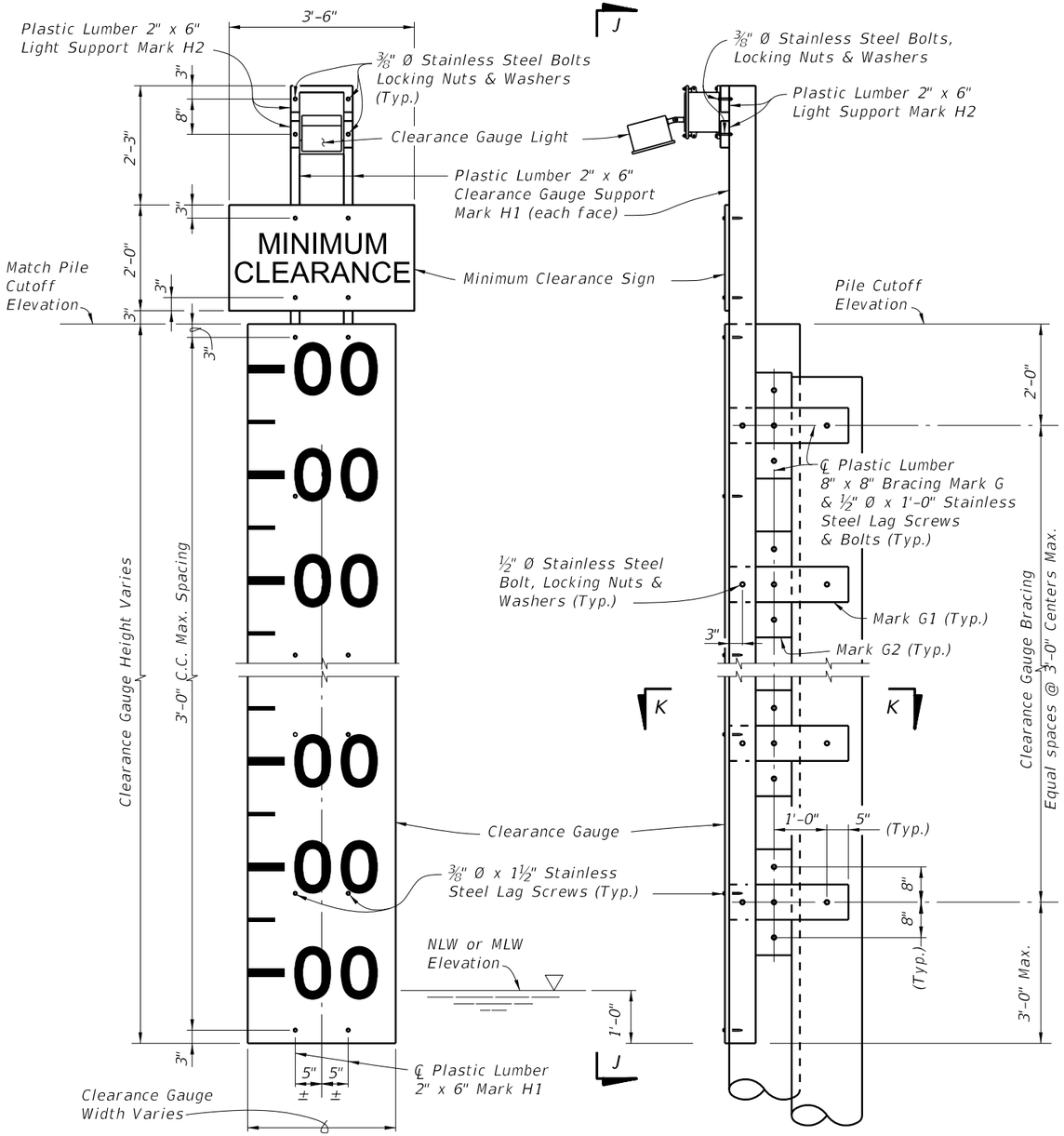

VIEW J-J
(WALES, PILES AND BRACING NOT SHOW FOR CLARITY)

VIEW G-G
(WALES, DECKING AND HANDRAIL NOT SHOWN FOR CLARITY)

CLEARANCE GAUGE DETAILS

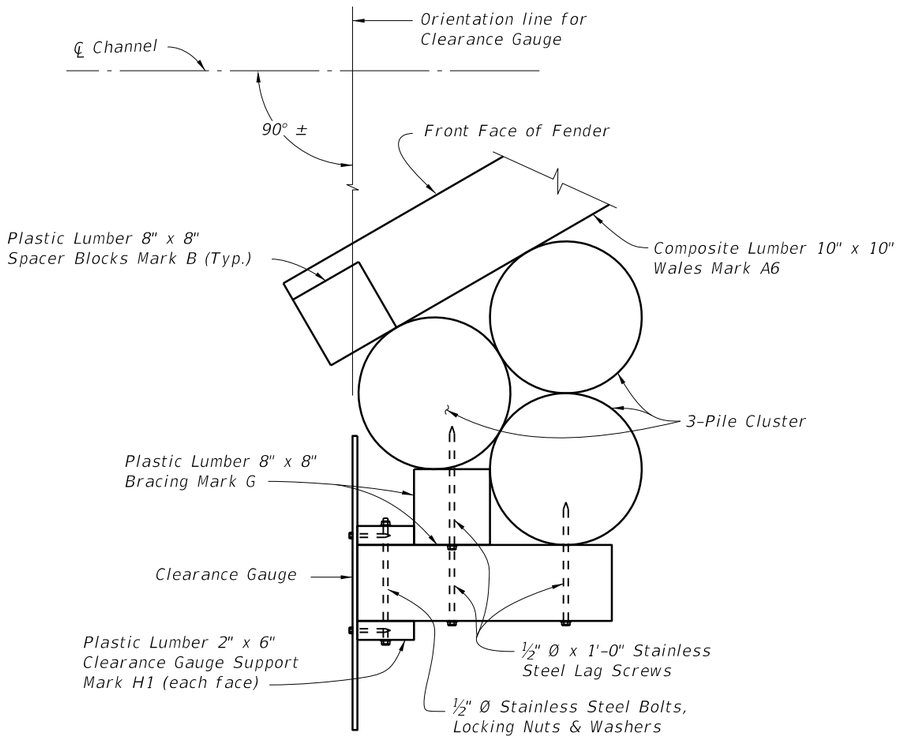

SECTION K-K

CROSS REFERENCES:

For Structural Composite and Plastic Lumber Bill of Materials Quantities and Fender System Table of Variables see Structures Plans.

For location of View G-G see Sheet 5.

FENDER SYSTEM DETAILS

LAST REVISION	REVISION	DESCRIPTION:			INDEX NO.	SHEET NO.
01/01/12			FDOT DESIGN STANDARDS 2013	FENDER SYSTEM -POLYMERIC PILES	21900	6

6/28/2012 2:26:18 PM rd960rh C:\d\projects\standards\structures\2013book\21900-6of7.dgn

* STRUCTURAL COMPOSITE LUMBER BILL OF MATERIALS

MARK	SIZE (NOMINAL)	DIMENSIONS	BOARD FT. PER EACH	NO. REQD.	QUANTITY
A1	10" X 10" COMPOSITE LUMBER	32'-0" (STRAIGHT)	266.6	See Estimated Structural Composite and Plastic Lumber Bill of Materials Table in Structures Plans	
A2	10" X 10" COMPOSITE LUMBER	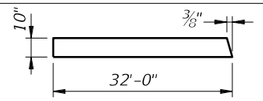	266.6		
A3	10" X 10" COMPOSITE LUMBER	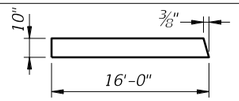	133.3		
A4	10" X 10" COMPOSITE LUMBER	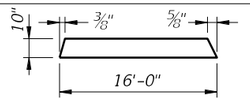	133.3		
A5	10" X 10" COMPOSITE LUMBER	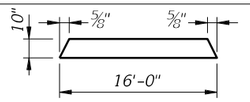	133.3		
A6	10" X 10" COMPOSITE LUMBER	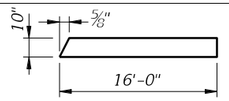	133.3		

* All Plastic Lumber and Composite Lumber Dimensions and Quantities shown are based on Nominal Lumber Dimensions and may vary depending on Actual Lumber Dimension.

** Provide Fiberglass Open Grating in lieu of 2" X 12" Plastic Lumber when called for in the Plans. Mounting hardware shall be Stainless Steel, install per Manufacturer's recommendations. See Structures Plans for Notes and Details.

* PLASTIC LUMBER BILL OF MATERIALS

MARK	SIZE (NOMINAL)	DIMENSIONS	BOARD FT. PER EACH	NO. REQD.	QUANTITY
B	8" X 8" PLASTIC LUMBER	8" (STRAIGHT)	3.6	See Estimated Structural Composite and Plastic Lumber Bill of Materials Table in Structures Plans	
C	2" X 6" PLASTIC LUMBER	16'-0" (STRAIGHT) (Trim & Miter Ends as required)	16.0		
D	4" X 6" PLASTIC LUMBER	4'-4" (STRAIGHT)	8.7		
** E	2" X 12" PLASTIC LUMBER	2'-6" (STRAIGHT) (Miter as required)	5.0		
F1	6" X 10" PLASTIC LUMBER	32'-0" (STRAIGHT)	160.0		
F2	6" X 10" PLASTIC LUMBER	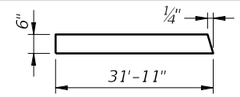	159.6		
F3	6" X 10" PLASTIC LUMBER	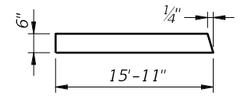	79.6		
F4	6" X 10" PLASTIC LUMBER	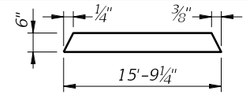	78.8		
F5	6" X 10" PLASTIC LUMBER	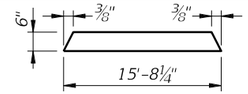	78.4		
F6	6" X 10" PLASTIC LUMBER	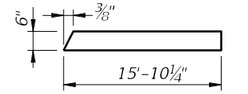	79.2		
G1	8" X 8" PLASTIC LUMBER	2'-3" (STRAIGHT)	12.0		
G2	8" X 8" PLASTIC LUMBER	2'-0" (STRAIGHT)	10.7		
H1	2" X 6" PLASTIC LUMBER	PILE CUTOFF ELEV. MINUS NLW OR MLW ELEV. PLUS 5'-6" (STRAIGHT)	1.0 PER LF EACH		
H2	2" X 6" PLASTIC LUMBER	1'-0" (STRAIGHT)	1.0		

6/28/2012 2:26:20 PM rd960rh C:\d\projects\standards\structures\2013book\21900-7of7.dgn

GENERAL NOTES:

U.S. COAST GUARD NOTIFICATION: Notify the local office of the U.S. Coast Guard at least 30 days prior to beginning of construction of the Fender System.

14" SQUARE PRESTRESSED CONCRETE PILES – Provide 14" Square Prestressed Concrete Piles of sufficient length to achieve a minimum embedment of 20' into soil having a blow count greater than or equal to 6 (N ≥ 6). Pile splices and build-ups are not permitted. Use only 14" Square Prestressed Concrete Piles with 8 – ½" diameter Low Relaxation Strands fabricated in accordance with Index No. 20614.

PLASTIC LUMBER AND STRUCTURAL COMPOSITE LUMBER WALES: Provide only Plastic Lumber and Structural Composite Lumber Wales in accordance with Specification Section 973. Wales shall be continuous and spliced only at locations shown on the plans.

PLASTIC LUMBER DECKING FOR CATWALKS: Provide Plastic Lumber decking for catwalks when called for in the Plans in accordance with Specification Section 973.

Install Plastic Lumber Decking according to manufacturer's recommendations using stainless steel #10 x 3" (minimum) deck screws.

FIBERGLASS OPEN GRATING FOR CATWALKS: Provide Fiberglass Open Grating for catwalks when called for in the Plans. Fiberglass Open Grating shall be a heavy duty design suitable for exterior installations. Maximum gap opening on the walkway surface shall be 1½". Design live loads and deflections shall be a 50 psf uniformly distributed load with a maximum deflection of ⅜" or L/120 at the center of a simple span and a concentrated load of 250 pounds with a maximum deflection of ¼" at the center of a simple span. Color of Fiberglass Open Grating shall be gray or black.

Install Fiberglass Open Grating according to manufacturer's recommendations using stainless steel hardware, screws, bolts, nuts and washers. Attach Fiberglass Open Grating to Wales and Deck Supports at a 2'-0" maximum spacing so as to resist pedestrian live loads and uplift forces from wind, buoyancy and wave action.

CLEARANCE GAUGE AND LIGHT: Clearance Gauge to be furnished by the FDOT and erected by the Contractor. Clearance Gauge width and numeral height is dependant on visibility distance. The required visibility distance shall be determined by the United States Coast Guard District Commander. Provide and install Clearance Gauge Light in accordance with Specification Section 510 and Index No. 21220.

NAVIGATION LIGHTS: Provide and install Navigation Lights in accordance with Specification Section 510, Index No. 21220 and/or project specific details. Provide and maintain Temporary Navigation Lights during construction until permanent Navigation Lights are operational.

BOLTS, THREADED BARS, NUTS, SCREWS AND WASHERS: Furnish stainless steel Bolts in accordance with ASTM F593 Type 316. Furnish stainless steel Threaded Bars in accordance with ASTM A193 Grade B8M. Furnish stainless steel Nuts in accordance with ASTM F594 Type 316. Furnish stainless steel Screws in accordance with ASTM F593 Type 305. Furnish stainless steel Washers compatible with Bolts, Threaded Rods and Nuts under heads and nuts. Torque Nuts on 1" diameter Bolts and Threaded Bars to 150 lb-ft. Keep threads on Bolts, Threaded Bars and Nuts free from dirt, coarse grime and sand to prevent galling and seizing during tightening.

SPLICE PLATES: Furnish Splice Plates in accordance with ASTM A240 Type 316.

WIRE ROPE: Provide wire rope meeting one of the following requirements:

1. ½" diameter 6x19, 6x25 or 6x37 class IWRC Type 316 stainless steel wire rope with a minimum breaking strength of 18,000 lbs.

2. ½" diameter 6x19 galvanized wire rope with ultraviolet ray resistant polypropylene impregnation having an outside diameter of 5/8" with a minimum breaking strength of 22,000 lbs. Protect all ends with heat shrinkable end caps compatible with the rope's polypropylene that provide an effective water-tight seal.

FENDER SYSTEM ENERGY CAPACITY:
Energy Capacity = 38 ft-k

GENERAL NOTES

6/28/2012 2:26:22 PM rd960rh C:\d\projects\standards\structures\2013book\21930-1of7.dgn

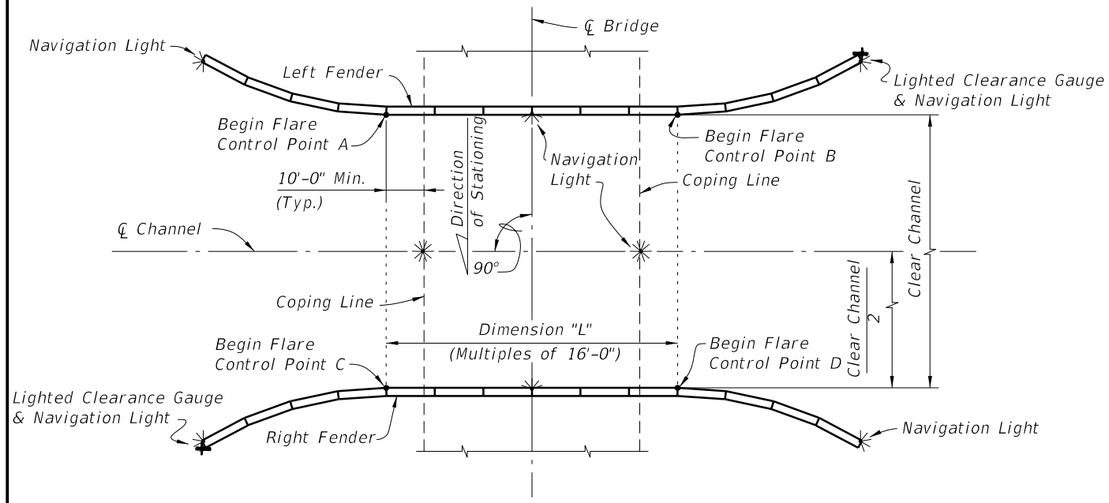

SCHEMATIC OF FENDER SYSTEM SHOWING TREATMENT OF SINGLE FIXED BRIDGE WITH NONSKEWED CHANNEL

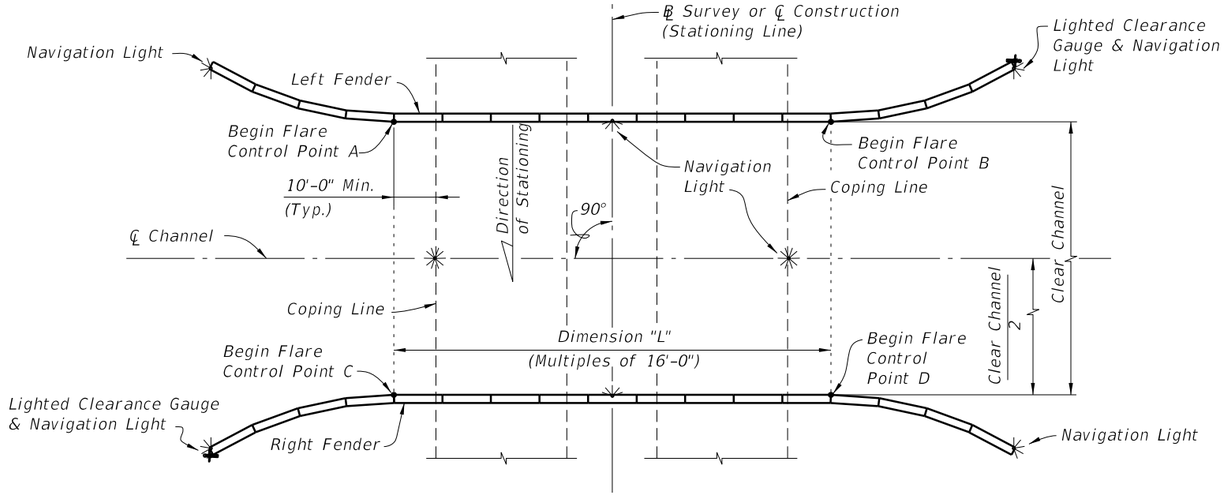

SCHEMATIC OF FENDER SYSTEM SHOWING TREATMENT OF DUAL FIXED BRIDGES WITH NONSKEWED CHANNEL (PARALLEL DUAL FIXED BRIDGES SHOWN, NONPARALLEL DUAL FIXED BRIDGES SIMILAR)

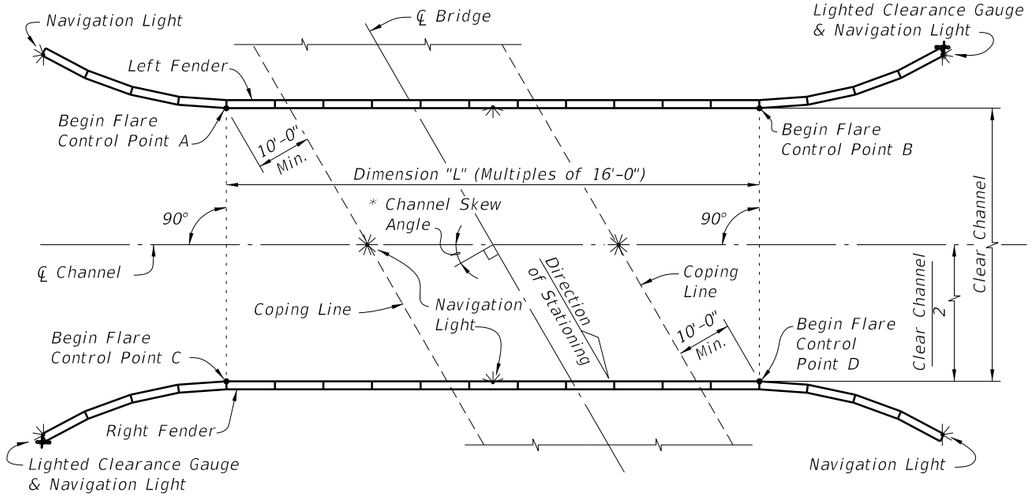

SCHEMATIC OF FENDER SYSTEM SHOWING TREATMENT OF SINGLE FIXED BRIDGE WITH SKEWED CHANNEL

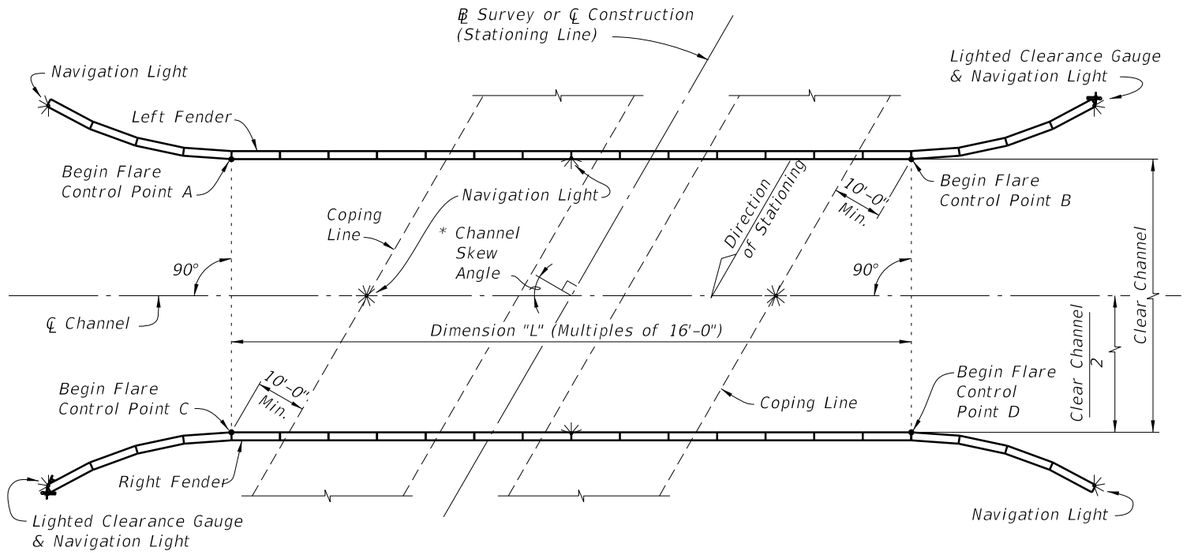

SCHEMATIC OF FENDER SYSTEM SHOWING TREATMENT OF DUAL FIXED BRIDGES WITH SKEWED CHANNEL (PARALLEL DUAL FIXED BRIDGES SHOWN, NONPARALLEL DUAL FIXED BRIDGES SIMILAR)

* See Structures Plans, Plan and Elevation and Foundation Layout Sheets for magnitude and orientation of Channel Skew Angle.

CROSS REFERENCES:
For Stations and Offsets of referenced Control Points A, B, C and D, Dimension "L" and Clear Channel Width see Fender System Table of Variables in Structures Plans.
For Navigation Light Details see Design Standards Index 21220.

LAYOUT GEOMETRY

C:\d\projects\standards\structures\2013book\21930-2of7.dgn
rd960rh
2:26:25 PM
6/28/2012

LAST REVISION	REVISION	DESCRIPTION:			INDEX NO.	SHEET NO.
07/01/11			FDOT DESIGN STANDARDS 2013	FENDER SYSTEM - PRESTRESSED CONCRETE PILES	21930	2

CROSS REFERENCES:

For Sections A–A and B–B see Sheet 4.

For View F–F see Sheet 5.

NOTE:
Plastic Lumber and Composite Lumber Dimensions shown are based on Nominal Lumber Dimensions and may vary depending on Actual Lumber Dimension.

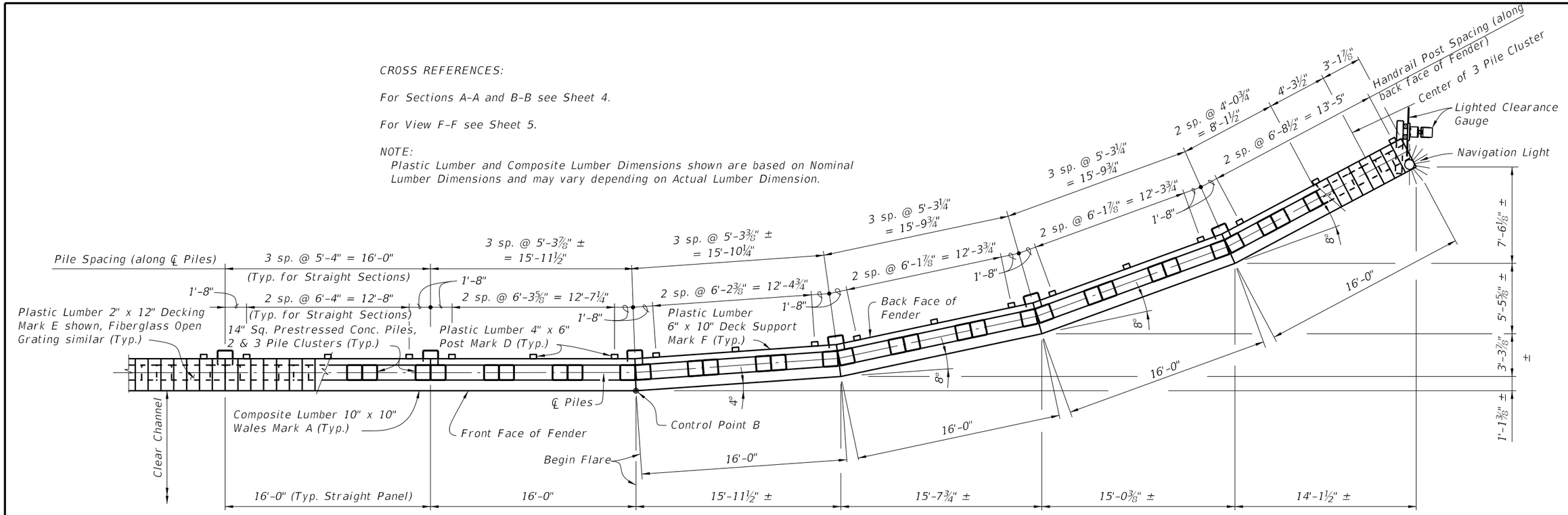

PARTIAL PLAN VIEW (TYPICAL FLARE)
(FLARE AT CONTROL POINT B SHOWN, CONTROL POINTS A, C & D SIMILAR)
(HANDRAIL NOT SHOWN FOR CLARITY)

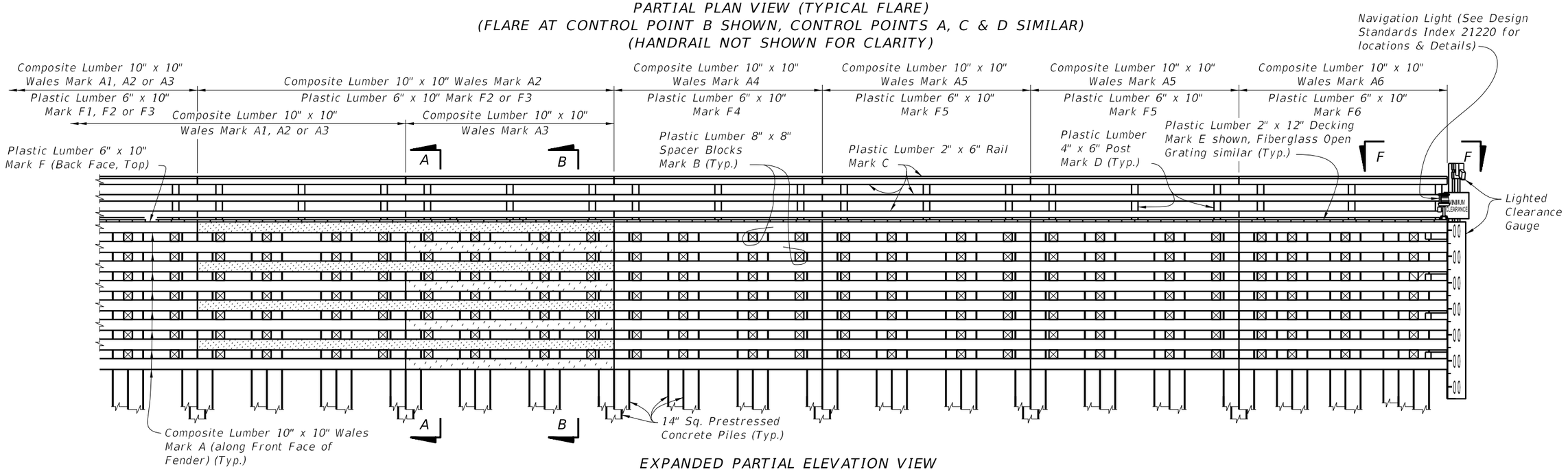

EXPANDED PARTIAL ELEVATION VIEW

C:\d\projects\standards\structures\2013book\21930-3of7.dgn
rd960rh
2:26:27 PM
6/28/2012

LAST REVISION	REVISION	DESCRIPTION:		FDOT DESIGN STANDARDS 2013	FENDER SYSTEM - PRESTRESSED CONCRETE PILES	INDEX NO.	SHEET NO.
01/01/12						21930	3

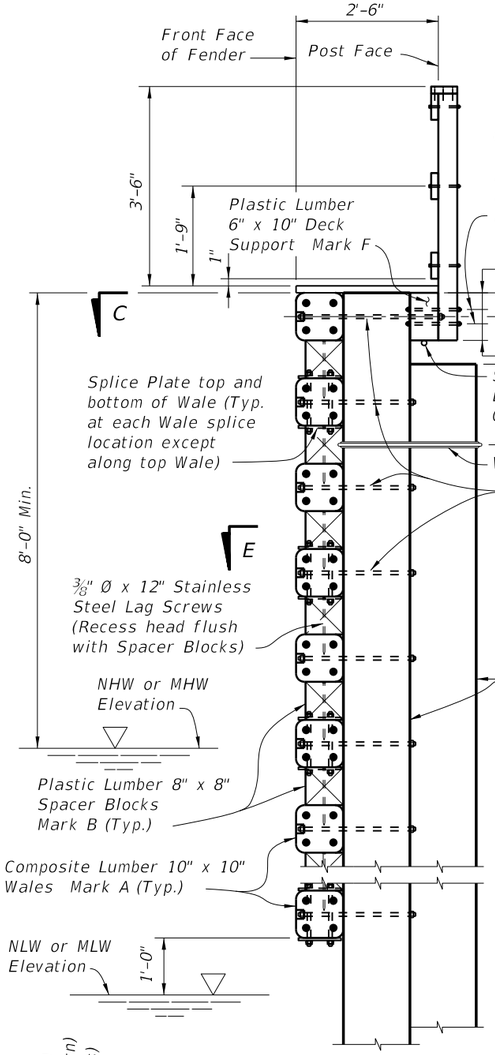

SECTION A-A

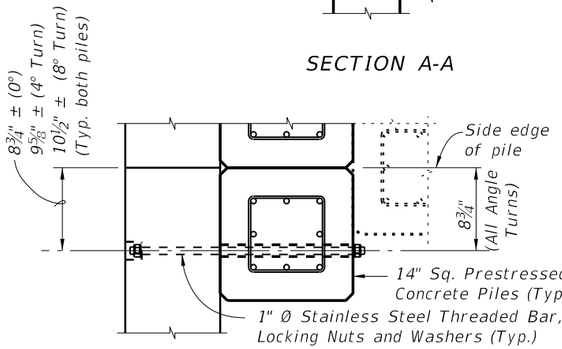

DETAIL "B" (SHOWING THREADED BAR LOCATION/RELATIONSHIP TO PILE PRESTRESSING STRANDS)

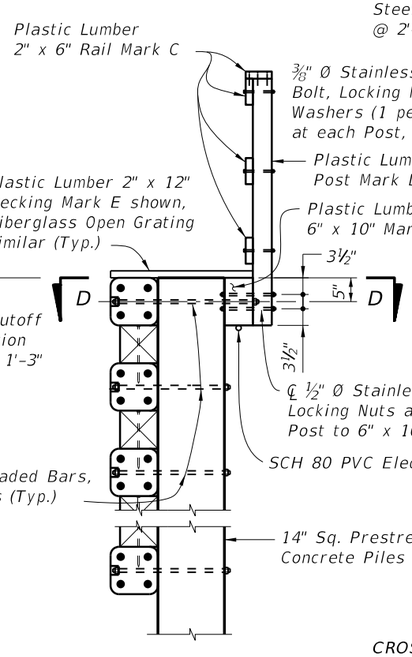

SECTION B-B

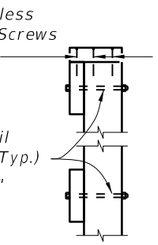

HANDRAIL DETAIL

CROSS REFERENCES:
For location of Sections A-A and B-B see Sheet 3.

For Section E-E and Detail "A" see Sheet 5.

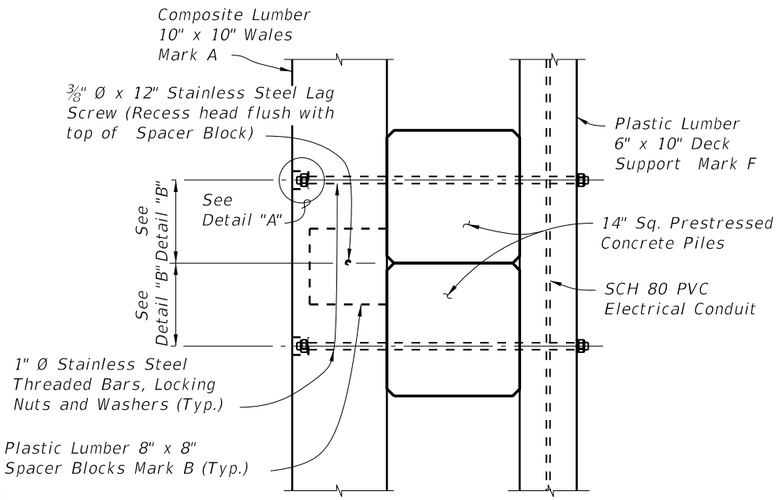

SECTION D-D
TYPICAL AT INTERMEDIATE PILES

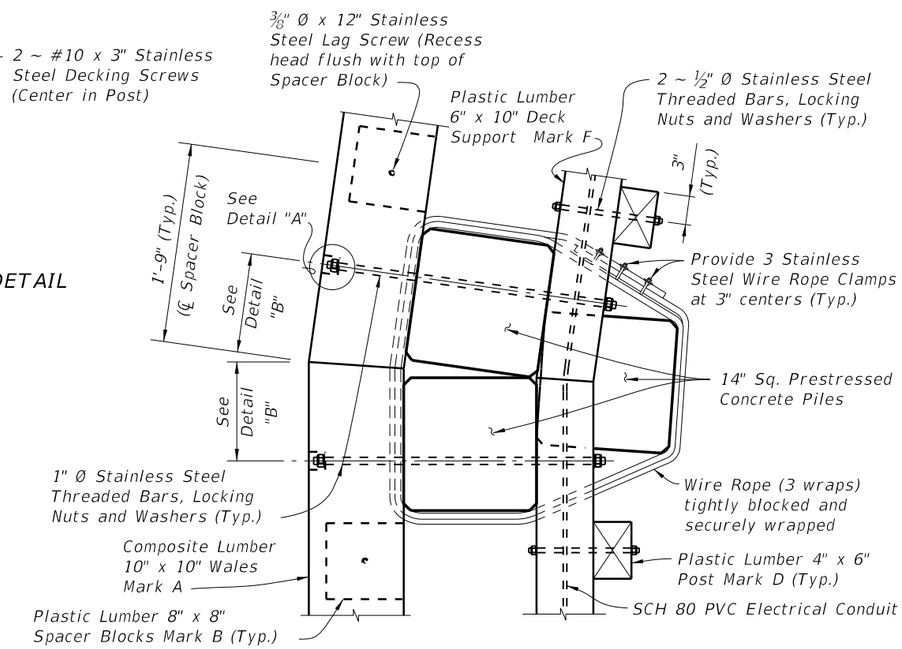

SECTION C-C
TYPICAL FLARED SECTION
(8° TURN SHOWN, 4° TURN SIMILAR)

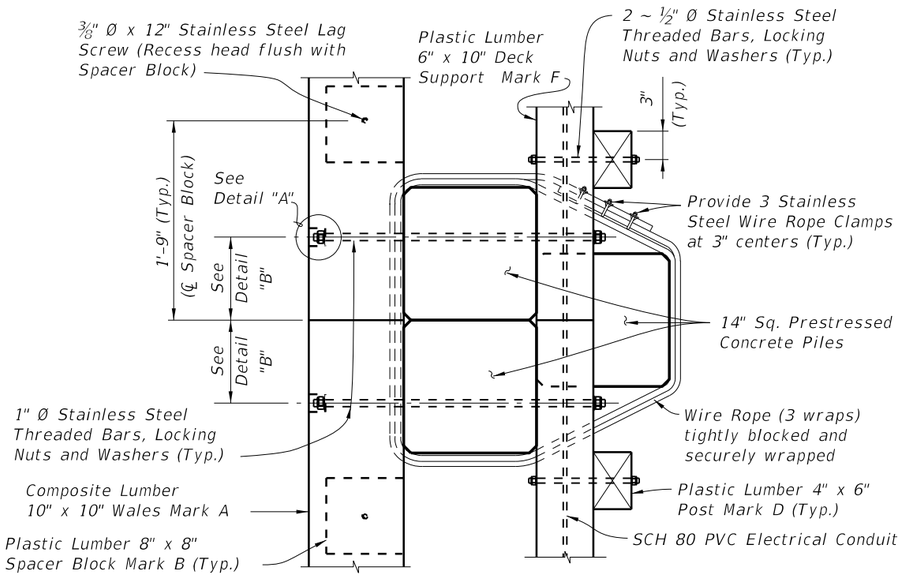

SECTION C-C
TYPICAL STRAIGHT SECTION

C:\d\projects\standards\structures\2013book\21930-4of7.dgn
rd960rh
2:26:30 PM
6/28/2012

LAST REVISION	REVISION	DESCRIPTION:				
01/01/12			FDOT DESIGN STANDARDS 2013	FENDER SYSTEM - PRESTRESSED CONCRETE PILES	INDEX NO. 21930	SHEET NO. 4

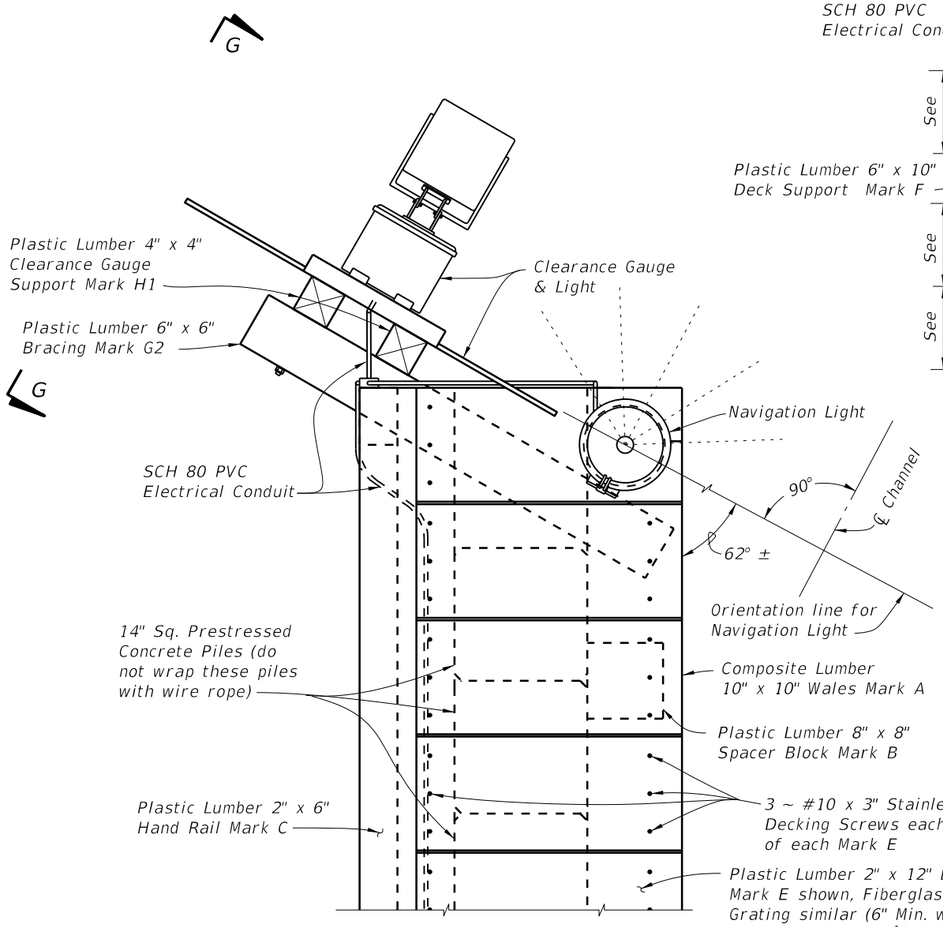

VIEW F-F
(SHOWING FENDER END WITH CLEARANCE GAUGE)

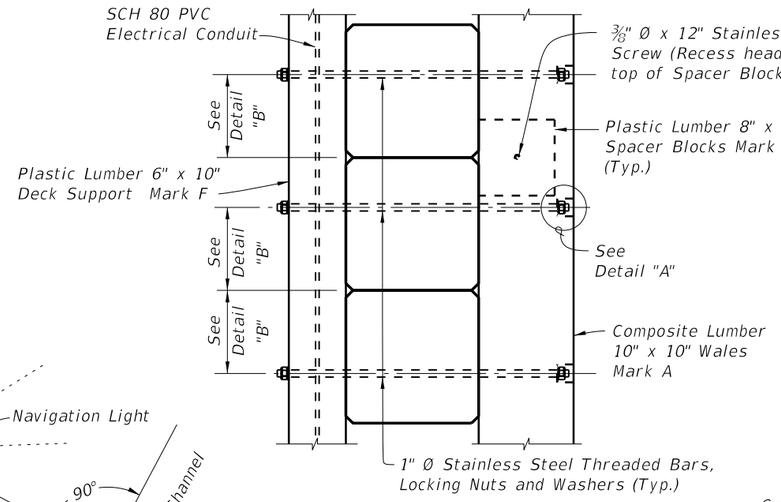

PARTIAL VIEW F-F
(SHOWING FENDER END; DECKING
AND HANDRAIL NOT SHOWN
FOR CLARITY)

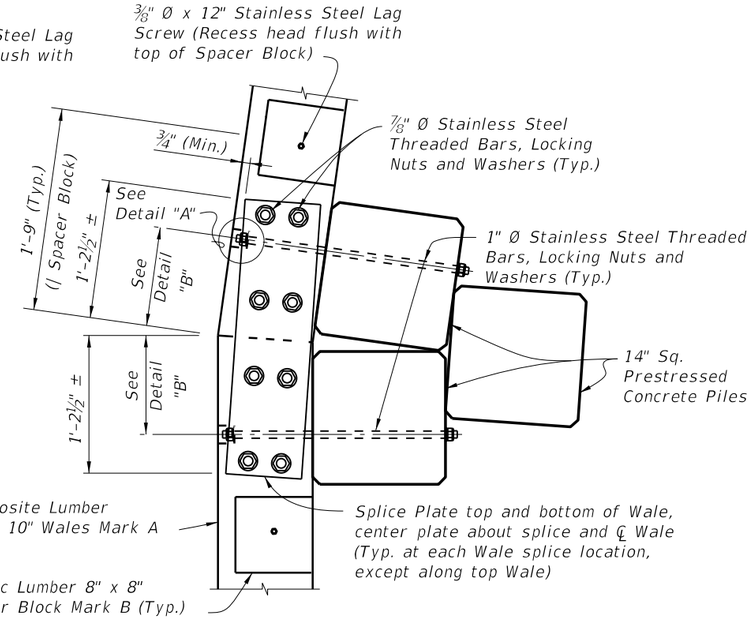

SECTION E-E
TYPICAL FLARED SECTION
(8° TURN SHOWN, 4° TURN SIMILAR)

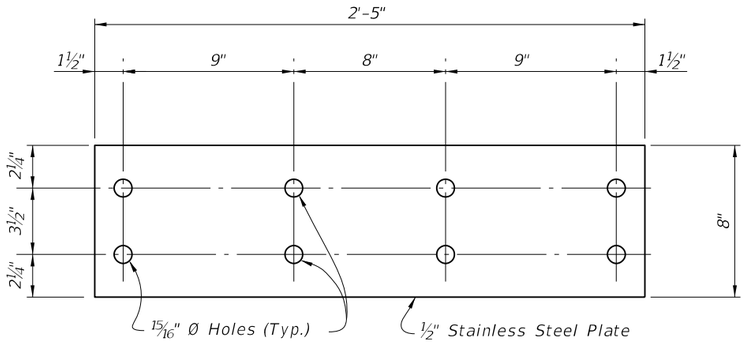

SPLICE PLATE DETAIL

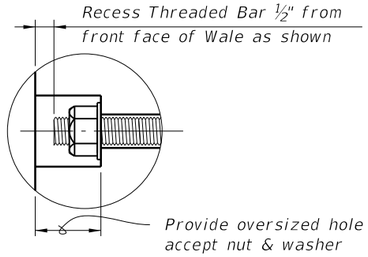

DETAIL "A"

CROSS REFERENCES:

For Navigation Lights and SCH 80 PVC Electrical Conduit Details see Design Standard Index 21220.

For View G-G and Clearance Gauge Details see Sheet 4.

For Detail "B" and location of Section E-E see Sheet 2.

For location of View F-F see Sheet 1.

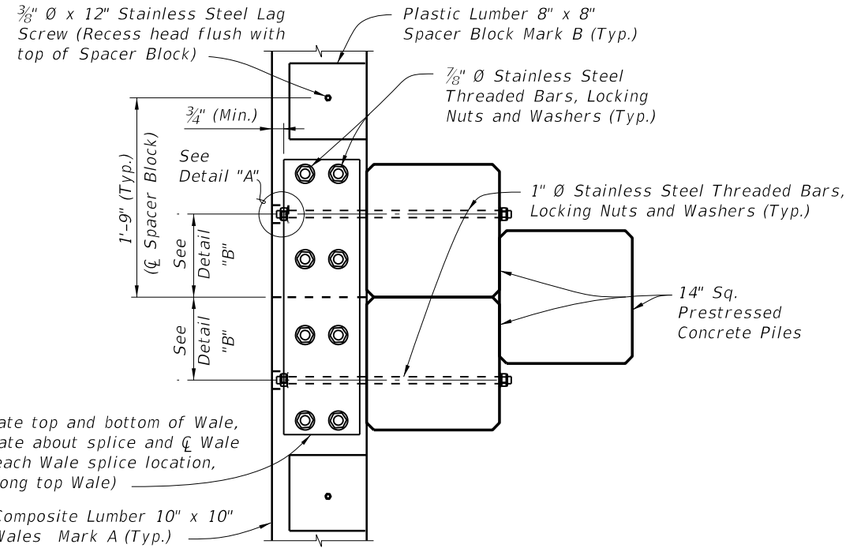

SECTION E-E
TYPICAL STRAIGHT SECTION

C:\d\projects\standards\structures\2013book\21930-5of7.dgn rd960rh 2:26:35 PM 6/28/2012

LAST REVISION	REVISION	DESCRIPTION:				
07/01/11			FDOT DESIGN STANDARDS 2013	FENDER SYSTEM - PRESTRESSED CONCRETE PILES	INDEX NO. 21930	SHEET NO. 5

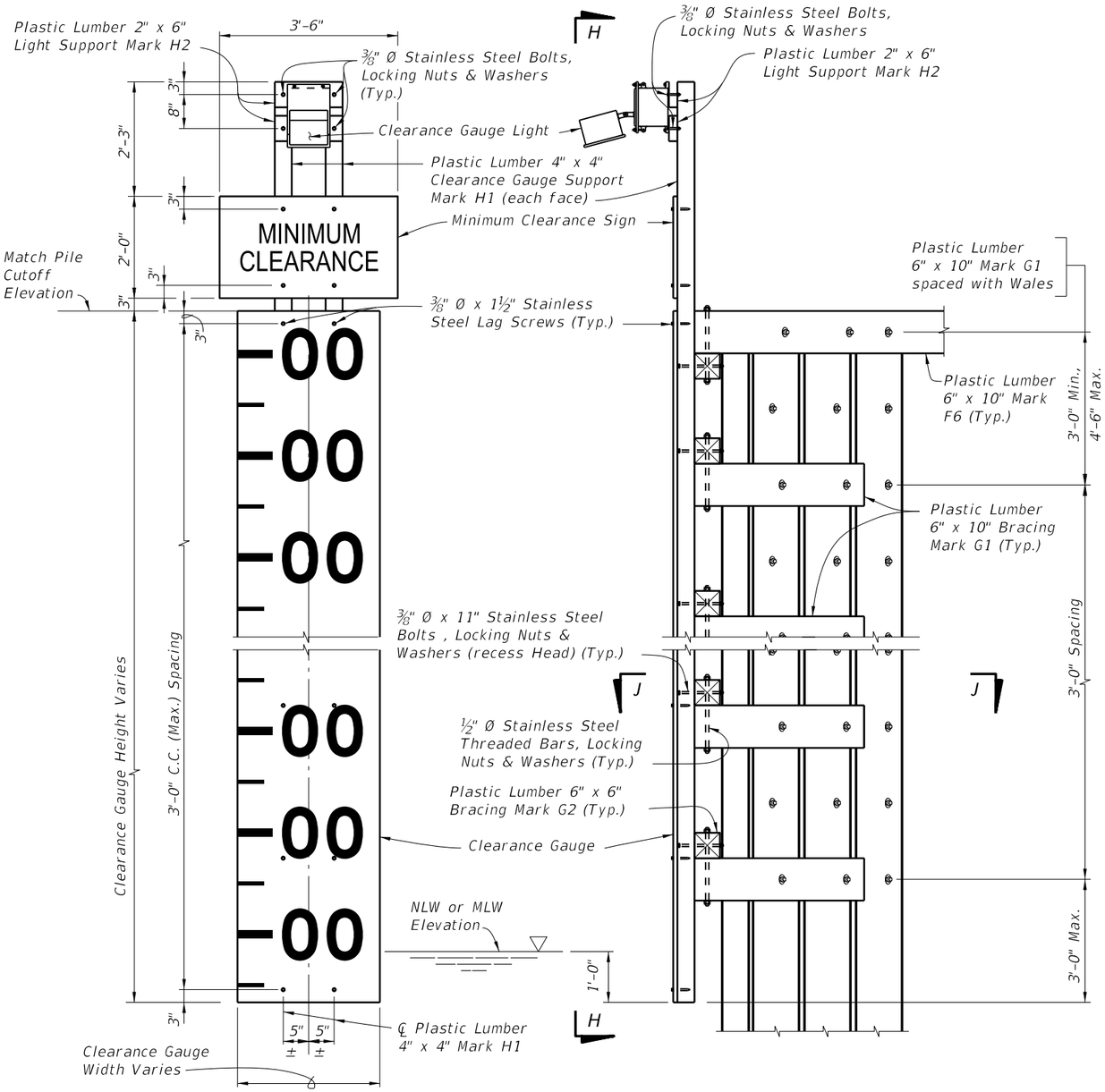

VIEW H-H
(WALES, PILES AND BRACING
NOT SHOWN FOR CLARITY)

VIEW G-G
(WALES, DECKING AND HANDRAIL
NOT SHOWN FOR CLARITY)

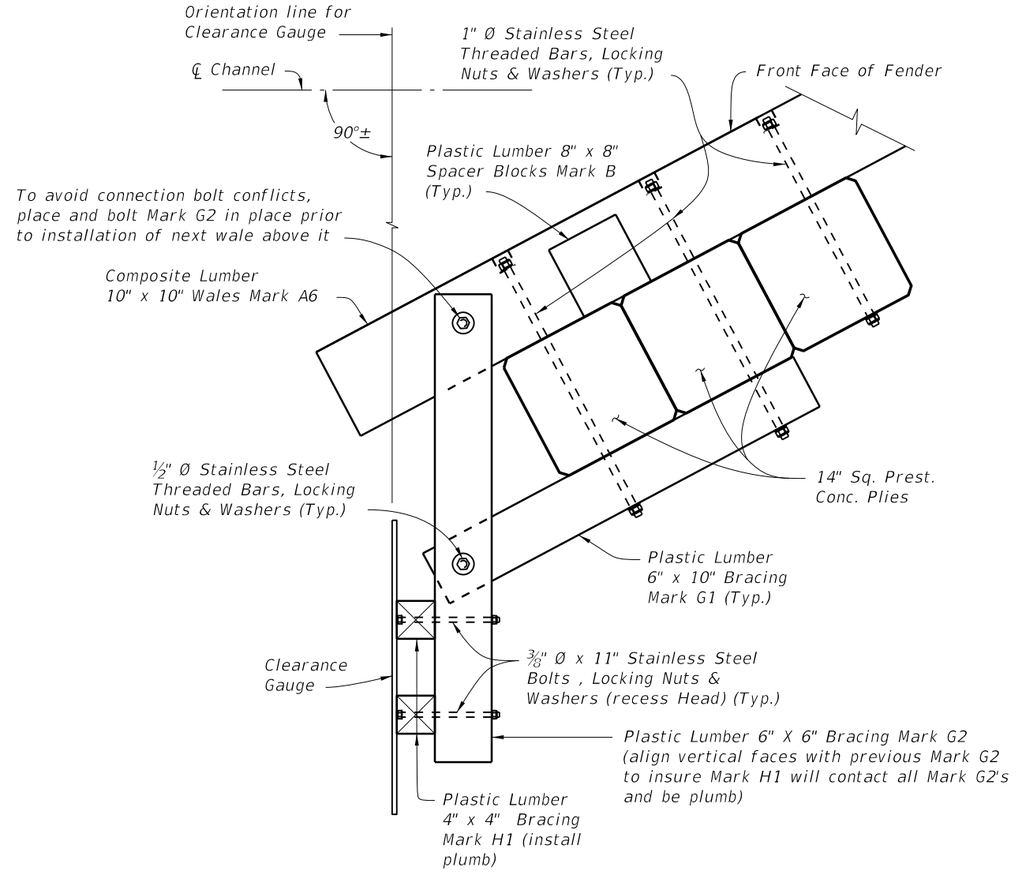

SECTION J-J

CROSS REFERENCES:

For Estimated Structural Composite and Plastic Lumber Bill of Materials Quantities and Fender System Table of Variables see Structures Plans.

For location of View G-G see Sheet 5.

CLEARANCE GAUGE DETAILS

C:\d\projects\standards\structures\2013book\21930-6of7.dgn
rd960rh
2:26:37 PM
6/28/2012

LAST REVISION	REVISION	DESCRIPTION:			INDEX NO.	SHEET NO.
01/01/12			FDOT DESIGN STANDARDS 2013	FENDER SYSTEM - PRESTRESSED CONCRETE PILES	21930	6

* STRUCTURAL COMPOSITE LUMBER BILL OF MATERIALS

MARK	SIZE (NOMINAL)	DIMENSIONS	BOARD FT. PER EACH	NO. REQD.	QUANTITY
A1	10" X 10" COMPOSITE LUMBER	32'-0" (STRAIGHT)	266.6	See Estimated Structural Composite and Plastic Lumber Bill of Materials Table in Structures Plans	
A2	10" X 10" COMPOSITE LUMBER	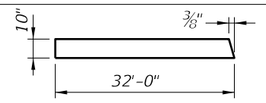	266.6		
A3	10" X 10" COMPOSITE LUMBER	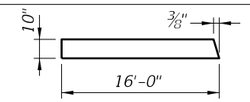	133.3		
A4	10" X 10" COMPOSITE LUMBER	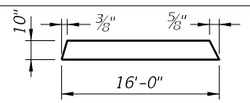	133.3		
A5	10" X 10" COMPOSITE LUMBER	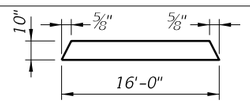	133.3		
A6	10" X 10" COMPOSITE LUMBER	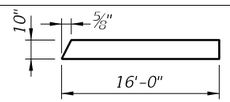	133.3		

* All Plastic Lumber and Composite Lumber Dimensions and Quantities shown are based on Nominal Lumber Dimensions and may vary depending on Actual Lumber Dimension.

** Provide Fiberglass Open Grating in lieu of 2" X 12" Plastic Lumber when called for in the Plans. Mounting hardware shall be Stainless Steel, install per Manufacturer's recommendations. See Structures Plans for Notes and Details.

* PLASTIC LUMBER BILL OF MATERIALS

MARK	SIZE (NOMINAL)	DIMENSIONS	BOARD FT. PER EACH	NO. REQD.	QUANTITY
B	8" X 8" PLASTIC LUMBER	8" (STRAIGHT)	3.6	See Estimated Structural Composite and Plastic Lumber Bill of Materials Table in Structures Plans	
C	2" X 6" PLASTIC LUMBER	16'-0" (STRAIGHT) (Trim & Miter Ends as required)	16.0		
D	4" X 6" PLASTIC LUMBER	4'-4" (STRAIGHT)	8.7		
** E	2" X 12" PLASTIC LUMBER	2'-6" (STRAIGHT) (Miter as required, 6" Min. width)	5.0		
F1	6" X 10" PLASTIC LUMBER	32'-0" (STRAIGHT)	160.0		
F2	6" X 10" PLASTIC LUMBER	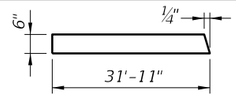	159.6		
F3	6" X 10" PLASTIC LUMBER	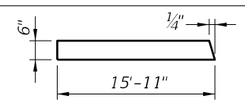	79.6		
F4	6" X 10" PLASTIC LUMBER	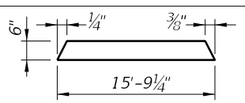	78.8		
F5	6" X 10" PLASTIC LUMBER	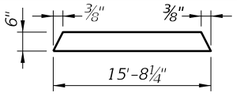	78.4		
F6	6" X 10" PLASTIC LUMBER	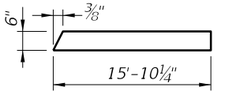	79.3		
G1	6" X 10" PLASTIC LUMBER	3'-8" (STRAIGHT)	18.3		
G2	6" X 6" PLASTIC LUMBER	4'-1" (STRAIGHT)	12.3		
H1	4" X 4" PLASTIC LUMBER	PILE CUTOFF ELEV. MINUS NLW OR MLW ELEV. PLUS 5'-6" (STRAIGHT)	1.3 PER LF EACH		
H2	2" X 6" PLASTIC LUMBER	1'-2" (STRAIGHT)	1.2		

6/28/2012 2:26:39 PM rd960rh C:\d\projects\standards\structures\2013book\21930-7of7.dgn