CROSS REFERENCES:
For Dimensions L and X see Sheet
Pile Wall Data Table in Structures Plans.

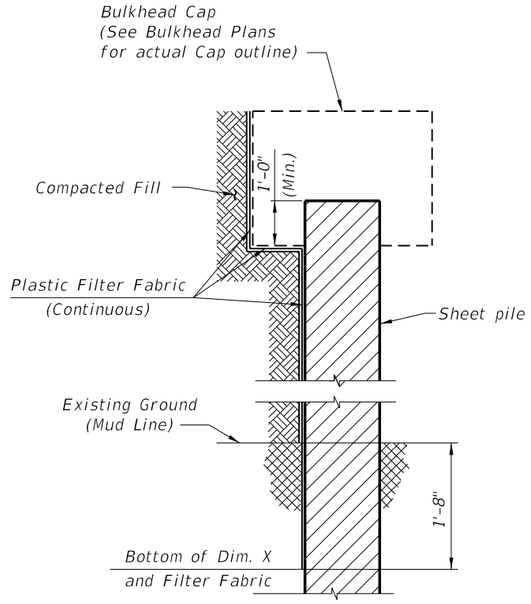

SECTION THRU BULKHEAD
(Showing Plastic Filter Fabric)

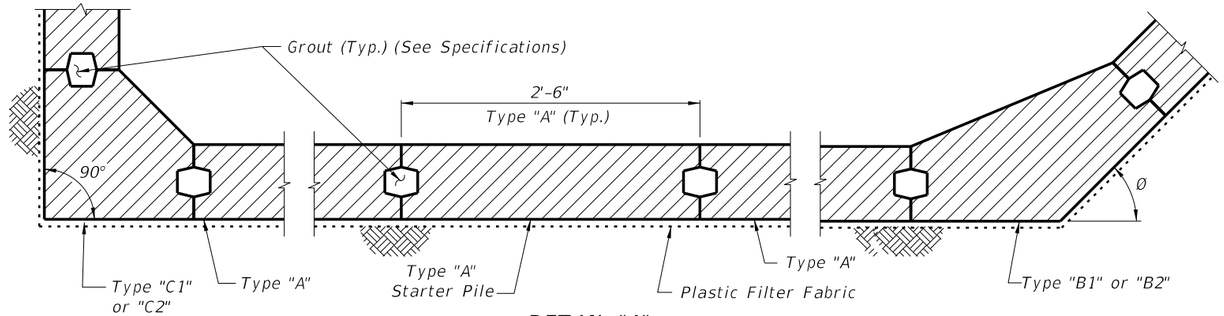

DETAIL "A"
(Cap and Anchoring System Not Shown)
(Section Taken Above Dimension X)

NOTE: Detail "A" shows a Part-Plan View of an assumed bulkhead.
See Bulkhead plans for actual Plan View.

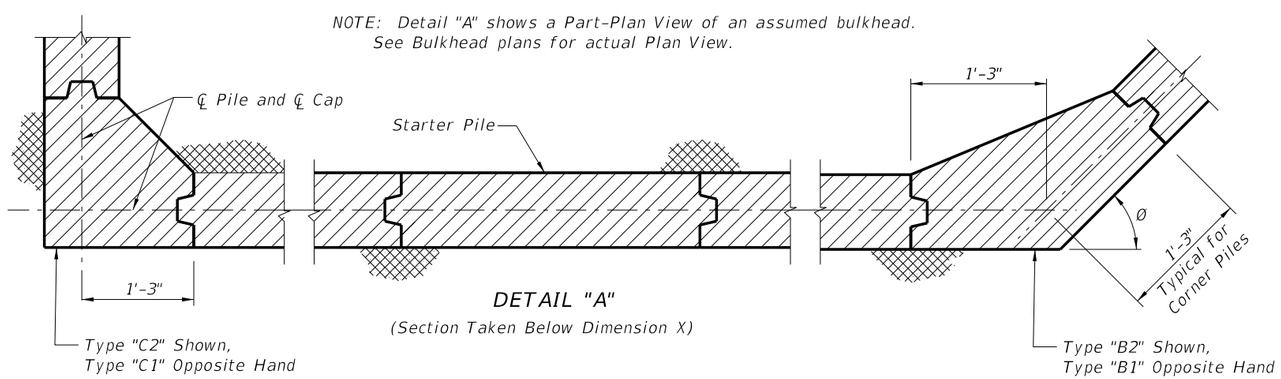

DETAIL "A"
(Section Taken Below Dimension X)

SHEET PILE DESIGN CRITERIA AND NOTES

DESCRIPTION:
This Design Standard includes details for five types of piles with two thicknesses. Types "B1", "B2", "C1" and "C2" piles (corner piles) are of reinforced concrete construction, and Type "A" is of prestressed concrete construction. The piles shall be manufactured, cured and installed in accordance with the requirements of the contract documents.

MATERIALS: (for materials not listed refer to the Specifications)
CONCRETE

Class:	V (Special) for slightly and moderately aggressive environments V (Special w/ Silica Fume) for extremely aggressive environment
Unit weight:	150 pcf
Modulus of Elasticity:	Based on the use of Florida limerock concrete

REINFORCING STEEL
ASTM A615 Grade 60

PRESTRESSING STEEL
ASTM A416 Grade 270 (Low-Relaxation Strand)

DESIGN PARAMETERS:
Type "A"

Concrete Compressive Strength at release of prestressing:	4000 psi minimum
Uniform compression after prestressing losses:	1000 psi minimum
Pick-up, Storage and Transportation:	0.0 psi tension with 1.5 times pile self weight

Types "B1", "B2", "C1" & "C2"
Pick-up, Storage and Transportation: Minimum compressive strength f'ci ≥ 4000 psi required.

ENVIRONMENT:
The pile designs are applicable to all Environments.

PLASTIC FILTER FABRIC:
The plastic filter fabric shall extend to the bottom of the "X" dimension.

PILE PICK-UP AND HANDLING:
Type "A"
Pick-up of pile may be either a single point pick-up or a two point pick-up as shown below.
Types "B1", "B2", "C1" & "C2"
Two point pick-up for lifting out of forms & two point support for storage & transportation.
Single point pick-up for installation only.

PILE FIT-UP:
The 2'-6" Sheet Pile dimension is nominal. This dimension may be shortened by the Manufacturer up to ½" to allow for Sheet Pile fit-up in its final position. Minimum Sheet Pile width is 2'-5½". No changes shall be made to the tongues or grooves.

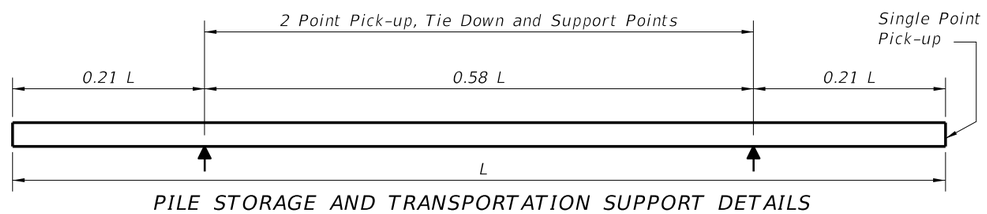

PILE STORAGE AND TRANSPORTATION SUPPORT DETAILS

NOTES AND DETAILS

LAST REVISION	REVISION	DESCRIPTION:			INDEX NO.	SHEET NO.
07/01/12			FDOT DESIGN STANDARDS 2013	PRECAST CONCRETE SHEET PILE WALL	6040	1

C:\d\projects\standards\structures\2013book\06040-1of4.dgn rd960rh 11:48:40 AM 6/28/2012

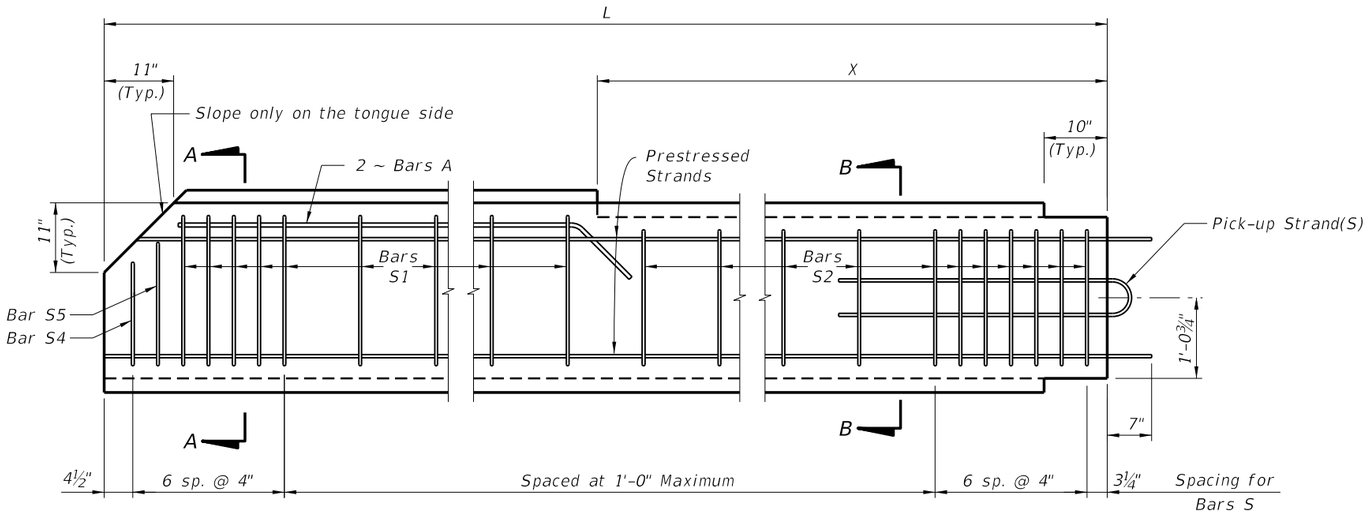

TYPICAL PILE

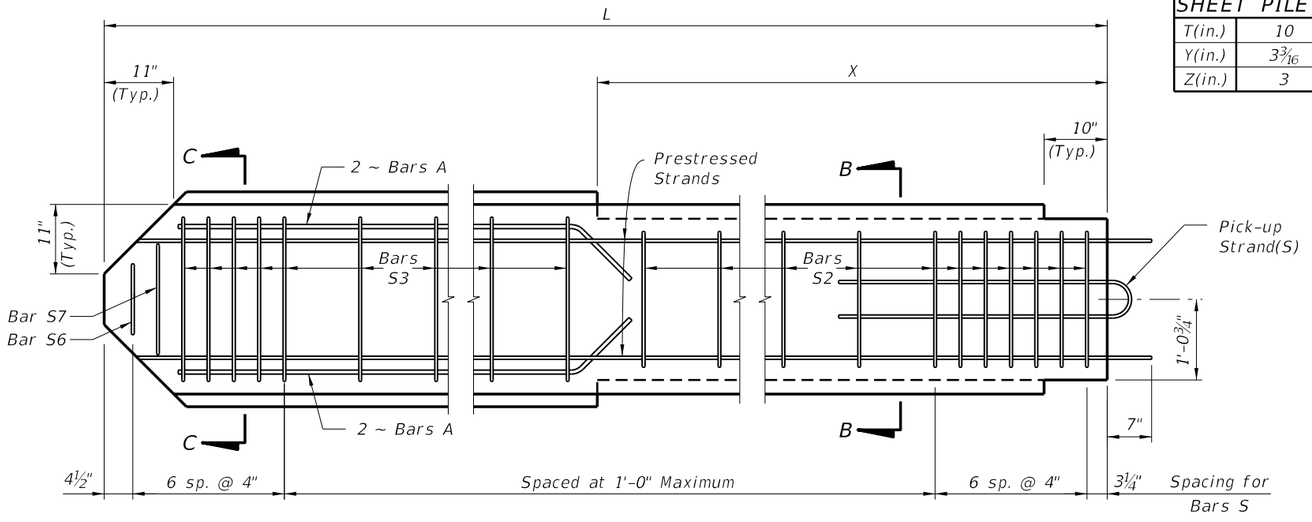

STARTER PILE

Wall Thickness	STRAND DIA. (in.)	MAXIMUM L	n	D (in.)	TOTAL # OF STRANDS	SECTION MODULUS (in.³)	* STRESS (psi)
T=10 in.	0.5	28'-0"	6	3¼	14	500	1150
	0.6	27'-0"	4	5	10	500	1160
T=12 in.	0.5	31'-0"	7	2⅞	16	720	1100
	0.6	30'-0"	5	4	12	720	1160

* Unit Prestress after losses.

SHEET PILE DIMENSIONS		
T(in.)	10	12
Y(in.)	3 3/16	4 3/16
Z(in.)	3	4

BAR BENDING DIAGRAMS

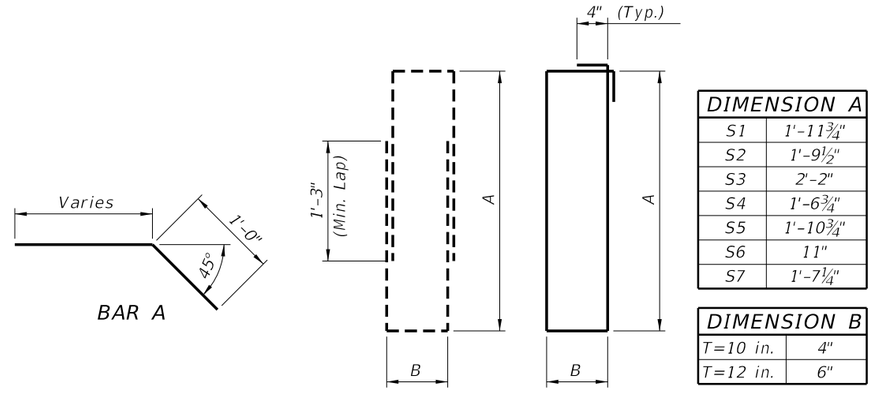

DIMENSION A	
S1	1'-11¾"
S2	1'-9½"
S3	2'-2"
S4	1'-6¾"
S5	1'-10¾"
S6	11"
S7	1'-7¼"

DIMENSION B	
T=10 in.	4"
T=12 in.	6"

NOTES:
1. Intermediate Prestress Strands not shown in Elevations and Sections.
2. All bar dimensions are out-to-out.
3. Bars A are #5 and Bars S are #4.
4. At the Contractor's option Bars S may be fabricated as a two piece bar as shown in the Bar Bending Diagram.
5. The Contractor may use Deformed Welded Wire Reinforcement conforming to specification ASTM A497 in lieu of Bars A and Bars S if the wire size and spacing provide the same area of reinforcing steel per foot as the Bars shown.
6. For Dimensions L and X see Sheet Pile Data Table in Structures Plans.

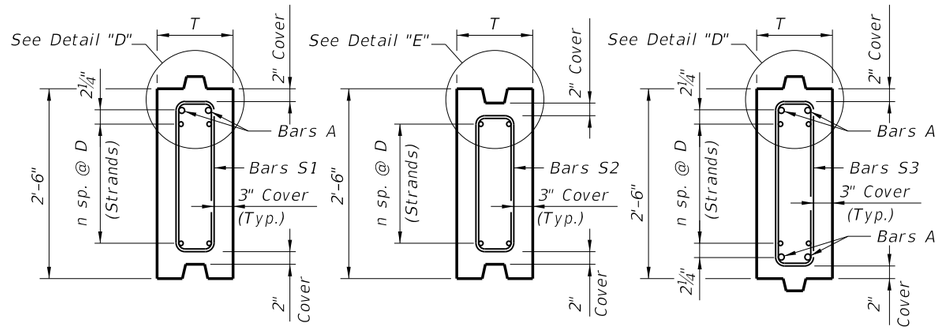

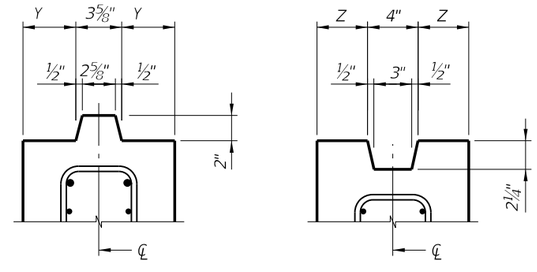

TYPE "A" STANDARD SECTION

C:\d\projects\standards\structures\2013book\06040-2of4.dgn 11:48:42 AM rd960rh 6/28/2012

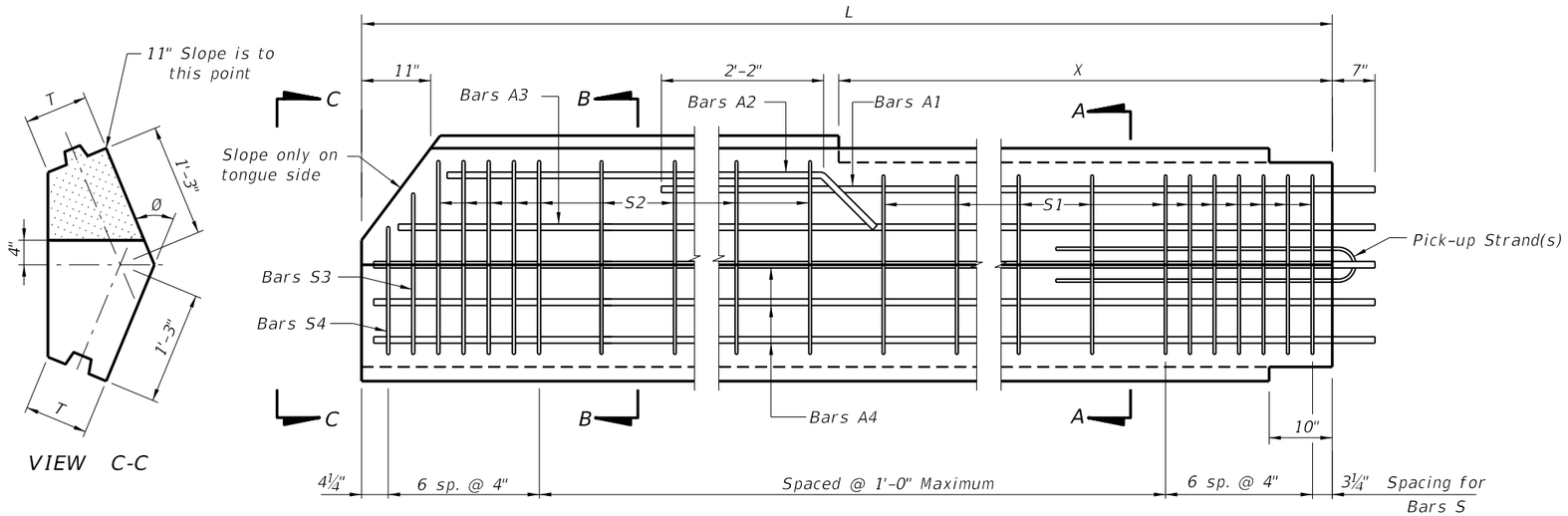

VIEW C-C

ELEVATION
(TYPE "B1" PILE SHOWN, TYPE "B2" PILE OPPOSITE HAND)

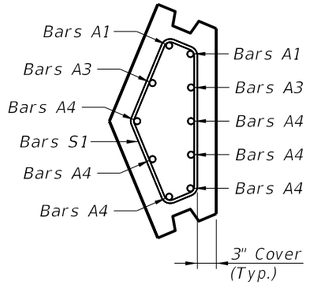

SECTION A-A

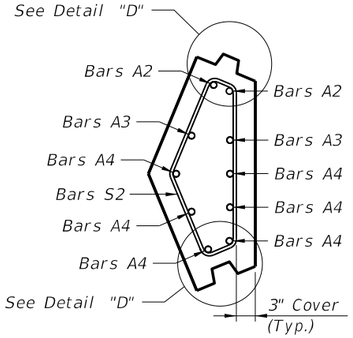

SECTION B-B

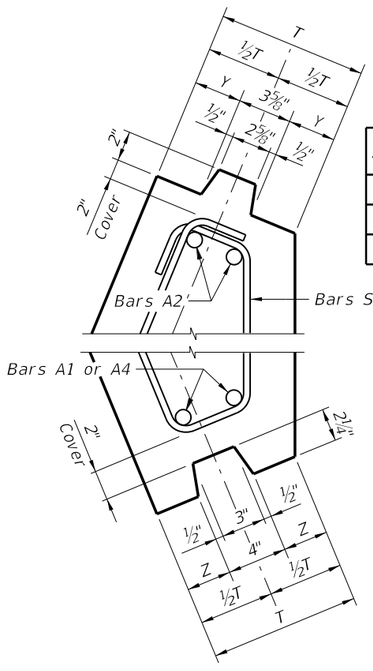

DETAIL "D"
(TYPE "B1" PILE SHOWN, TYPE "B2" PILE OPPOSITE HAND)

SHEET PILE DIMENSIONS		
T (in.)	10	12
Y (in.)	3 3/16	4 3/16
Z (in.)	3	4

BAR BENDING DIAGRAMS

STIRRUP DIMENSIONS (T = 10")

Ø	BAR MARK	R1	R2	R3	R4	R5	R6	R7	R8
30°	S1	11¼"	9¾"	1'-6½"	2½"	5"	4¾"	5½"	4¼"
	S2	1'-1½"	9¾"	1'-8¾"	2½"	4½"	5½"	5¾"	4¼"
	S3	11¼"	8"	1'-6"	1¼"	5"	4½"	4½"	5"
	S4	11¼"	4¼"	1'-1¾"	1¾"	5"	3¾"	2½"	6¼"
45°	S1	11½"	8"	1'-4"	4"	5½"	6½"	8"	4"
	S2	1'-1¾"	8"	1'-5¾"	4"	4½"	7½"	8"	4"
	S3	11½"	6¾"	1'-4"	2¼"	5½"	6¾"	6¾"	5½"
	S4	11½"	3½"	1'-0"	3"	5½"	5"	3½"	7"
60°	S1	1'-0"	6"	1'-0¾"	5¼"	6"	7¼"	10¼"	3"
	S2	1'-2"	6"	1'-2¾"	5¼"	4¾"	8¾"	10½"	3"
	S3	1'-0"	4¾"	1'-1½"	3¼"	6"	8"	8¾"	5¼"
	S4	1'-0"	2½"	10"	4½"	6"	5¾"	4"	7½"

STIRRUP DIMENSIONS (T = 12")

Ø	BAR MARK	R1	R2	R3	R4	R5	R6	R7	R8
30°	S1	11½"	10"	1'-6"	3½"	7"	4¾"	5¾"	6"
	S2	1'-1¾"	10"	1'-8¼"	3½"	6½"	5¼"	5¾"	6"
	S3	11½"	8¼"	1'-5¾"	2"	7"	4¾"	4½"	7¼"
	S4	11½"	4"	1'-1¼"	2¼"	7"	3¾"	2½"	8¼"
45°	S1	1'-0"	8½"	1'-3¼"	5¼"	7½"	6¼"	8½"	5¼"
	S2	1'-2¼"	8½"	1'-5½"	5¼"	6½"	7¼"	8½"	5¼"
	S3	1'-0"	7"	1'-4"	3"	7½"	6¾"	7"	7¼"
	S4	1'-0"	3½"	11¾"	3¾"	7½"	5"	3½"	9"
60°	S1	1'-0½"	6¼"	11¾"	7"	8"	6¾"	10¾"	4"
	S2	1'-2¾"	6¼"	1'-2"	7"	6¾"	8"	10¾"	4"
	S3	1'-0½"	5"	1'-1½"	4"	8"	8"	9"	7"
	S4	1'-0½"	2½"	9½"	5½"	8"	5½"	4¼"	9¼"

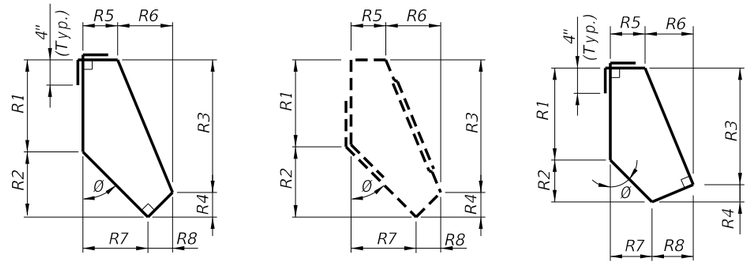

1 - PIECE

2 - PIECE

BARS S1 & S2

BARS S3 & S4

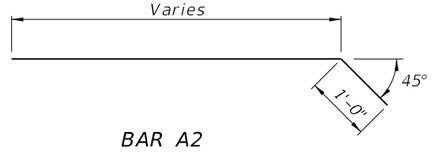

BAR A2

NOTES:
1. This drawing includes details for precast concrete corner piles for 10" and 12" thick sheet pile systems. The details apply equally to both thicknesses.
2. The bar configurations shown in Sections A-A and B-B shall be used for Ø angles between 15° and 75°. For Ø angles not shown, the reinforcing bar dimensions may be interpolated or extrapolated from the stirrup dimensions shown.
3. All bar dimensions are out-to-out.
4. Bars A are #8 and Bars S are #4.
5. Values for Stirrup Dimensions are shown for Ø equal to 30°, 45° & 60° only.
6. At the Contractor's option Bars S may be fabricated as a 2 piece bar with a minimum lap length of 1'-6", as shown in Bar Bending Diagrams.
7. If Type "B1" or "B2" pile is used as a Starter Pile show tongue on both sides of pile from Dim. X down. Show dimensions for Bars S2, S3 & S4 in shop drawings.
8. If tongue must be on the opposite side from that shown all dimensions and Bars A, S2, S3 and S4 will be the same but opposite hand.
9. For Dimensions L, X and Angle Ø, see Sheet Pile Data Table in Structures Plans.

TYPE "B1" AND "B2" - VARIABLE ANGLE CORNER PILE

C:\d\projects\standards\structures\2013book\06040-3of4.dgn
rd960rh
11:48:45 AM
6/28/2012

LAST REVISION	REVISION	DESCRIPTION:	FDOT DESIGN STANDARDS 2013	PRECAST CONCRETE SHEET PILE WALL	INDEX NO.	SHEET NO.
07/01/12					6040	3

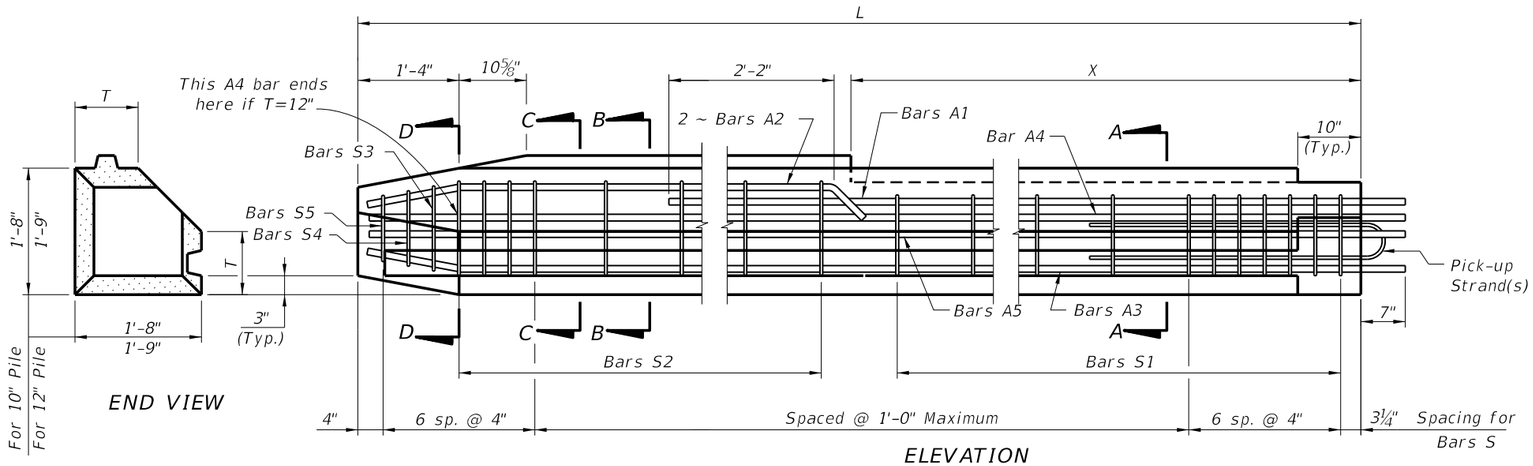

END VIEW

ELEVATION
(TYPE "C1" PILE SHOWN, TYPE "C2" PILE OPPOSITE HAND)

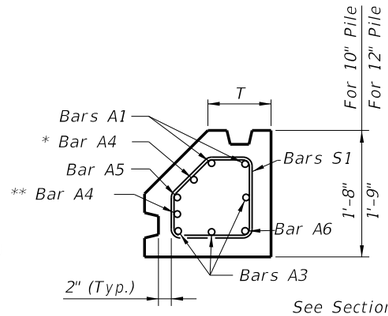

SECTION A-A

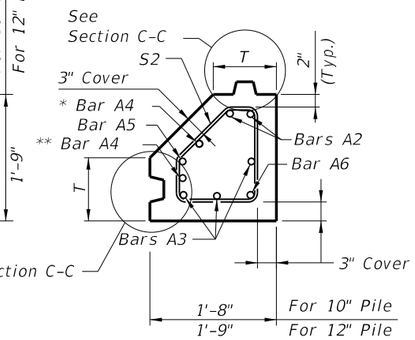

SECTION B-B

* This Bar A4 shall be 1'-2" shorter than other A4 bars for T = 12".

** This Bar A4 (not shown in elevation) is included only if T = 12".

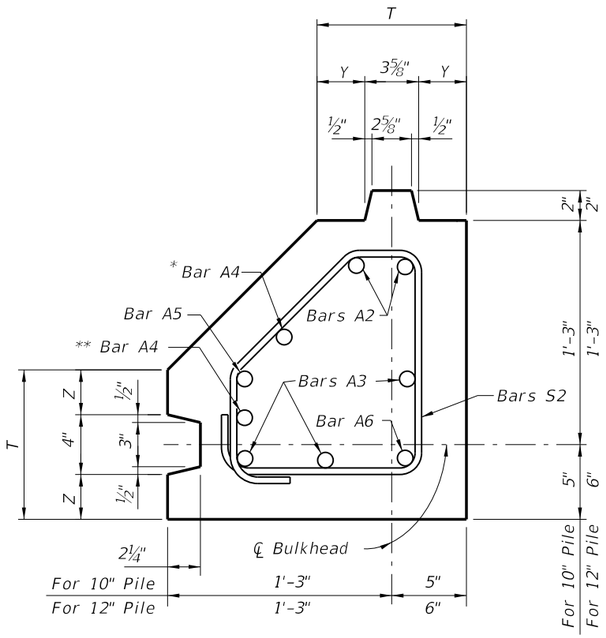

SECTION C-C (T=10" or 12")

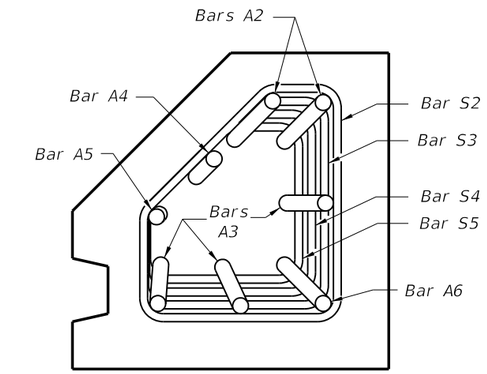

SECTION D-D (T=10")

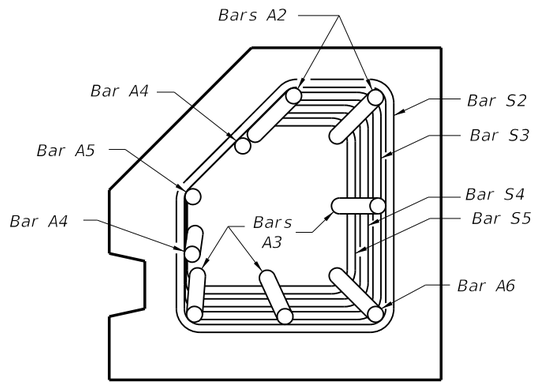

SECTION D-D (T=12")

STIRRUP DIMENSIONS					
θ	T (in.)	BAR MARK	R1	R2	R3
90°	10	S1	7"	5¾"	7"
		S2	7"	8"	4¾"
		S3	6¼"	7¼"	4¾"
		S4	5½"	6½"	4¾"
		S5	4¾"	5¾"	4¾"
	12	S1	9"	4¾"	9"
		S2	9"	7"	6¾"
		S3	8¼"	6¼"	6¾"
		S4	7½"	5½"	6¾"
		S5	6¾"	4¾"	6¾"

SHEET PILE DIMENSIONS		
T (in.)	10	12
Y (in.)	3 3/16	4 3/16
Z (in.)	3	4

BAR BENDING DIAGRAMS

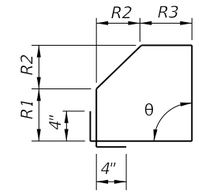

STIRRUPS S

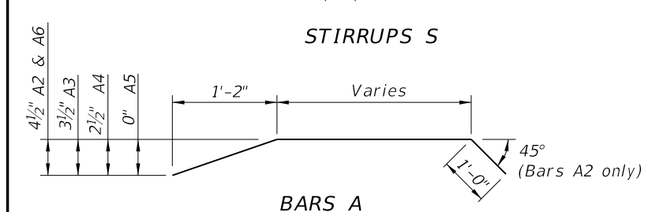

BARS A

Note: All Bar dimensions are out-to-out.

NOTES:
1. All bar dimensions are out-to-out.
2. Bars A are #8 and Bars S are #4.
3. This drawing includes information for precast Corner Piles for 10" and 12" thick Sheet Pile systems. The details apply to both thicknesses but the bar configurations change slightly according to the thickness values used.
4. If Type "C1" or "C2" pile is used as a Starter Pile show tongue on both sides of pile from Dim. X down. Show dimensions for Bars S2, S3, S4 & S5 in shop drawings.
5. If tongue must be on opposite side (Groove Side) from that shown, all dimensions and reinforcement shall follow the corresponding Tongue or Groove side.
6. For Dimensions L and X see Sheet Pile Data Table in Structures Plans.

TYPE "C1" AND "C2" - RIGHT ANGLE CORNER PILE

LAST REVISION	REVISION	DESCRIPTION:			INDEX NO.	SHEET NO.
07/01/12			FDOT DESIGN STANDARDS 2013	PRECAST CONCRETE SHEET PILE WALL	6040	4

6/28/2012 11:48:47 AM rd960rh C:\d\projects\standards\structures\2013book\06040-4of4.dgn