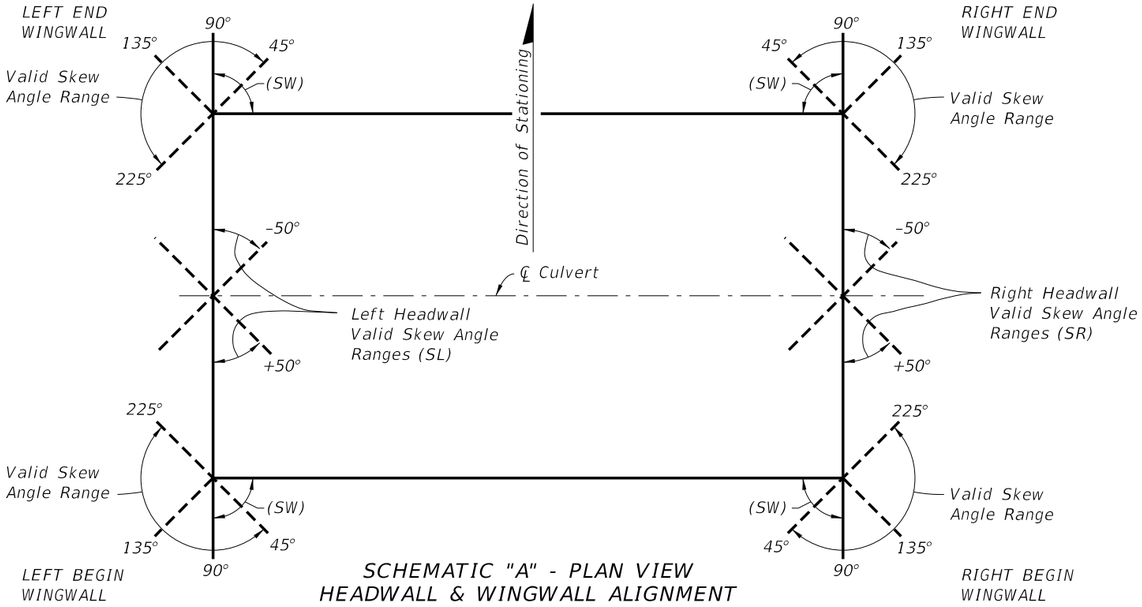

SCHEMATIC "A" - PLAN VIEW
HEADWALL & WINGWALL ALIGNMENT

NOTE: All headwall and culvert skew angles are measured in degrees from a line perpendicular to the centerline of culvert (counter-clockwise positive), see Schematic "B".

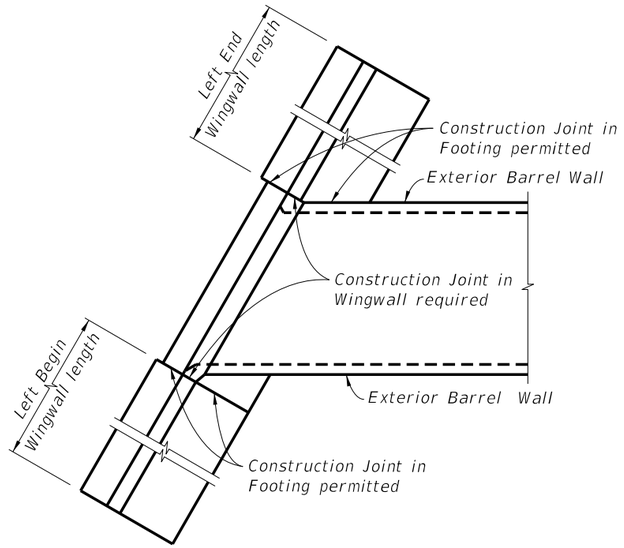

PART PLAN SHOWING PARALLEL WINGWALLS
AND LOCATION OF CONSTRUCTION JOINTS

NOTE:
Construction Joints in wingwalls and footings are located as follows: For non-skewed wingwalls they are located adjacent to the exterior face of the exterior barrel wall; when the ℄ of wingwall and ℄ of exterior barrel wall results in an acute angle see Left End Wingwall above, and when the angle is obtuse see Left Begin Wingwall above and Detail C (Sheet 5).

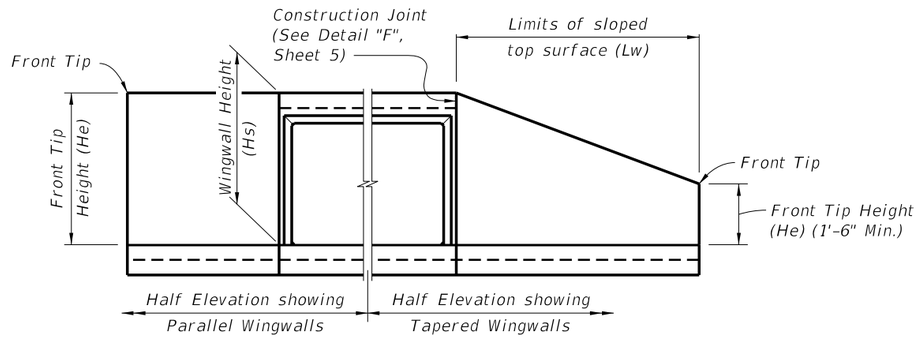

END ELEVATION
OF CULVERT

GENERAL NOTES:

LIVE LOAD: HL-93.

CONSTRUCTION LOADING: It is the construction Contractor's responsibility to provide for supporting construction loads that exceed AASHTO HL-93, and any construction load applied prior to 2 feet of compacted fill placed above the top slab.

SURFACE FINISH: All concrete surfaces shall receive a general surface finish.

SKEWED CONSTRUCTION JOINTS: Construction joints in barrels of culverts with skewed wingwalls may be placed parallel to the headwalls and the reinforcing steel, and the slabs may be cut provided that the cut reinforcing steel extends beyond the construction joint enough for splices to be made in accordance with Table 1 on this sheet. The cost of construction joints and additional reinforcing shall be at the expense of the Contractor.

CULVERT EXTENSIONS: For cut backs and ties into existing concrete box culverts see Sheet 6 of 7.

REINFORCING STEEL: See the "Box Culvert Data Tables" in the Contract Plans for grade and bar spacing. See the Reinforcing Bar List in the Contract Plans for bar sizes and bar bending details.

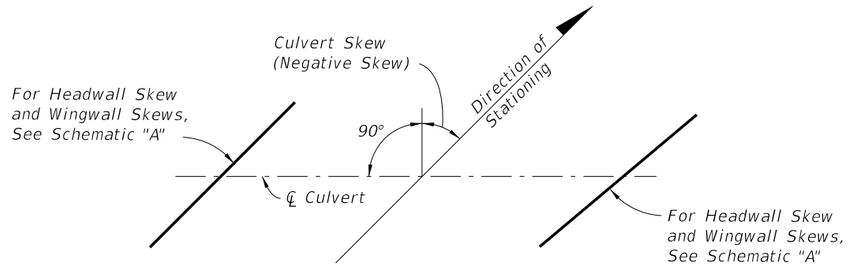

SCHEMATIC "B" - PLAN VIEW
CULVERT ALIGNMENT

NOTE: For Culvert Skew see Contract Plans.

TABLE 1 - MINIMUM BAR SPLICE LENGTHS FOR LONGITUDINAL REINFORCING

BAR SIZE	SPLICE (CLASS B)		BAR SIZE	SPLICE (CLASS B)	
	CLASS II (3400 psi)	CLASS IV (5500 psi)		CLASS II (3400 psi)	CLASS IV (5500 psi)
#3	1'-0"	1'-0"	#8	3'-6"	2'-9"
#4	1'-4"	1'-4"	#9	4'-5"	3'-6"
#5	1'-8"	1'-8"	#10	6'-7"	4'-5"
#6	1'-11"	1'-11"	#11	7'-10"	6'-5"
#7	2'-8"	2'-3"			

TABLE 1 NOTE: Splice lengths are based on an AASHTO Class B tension lap splice for the Specification Section 346 concrete class shown.

C:\d\projects\standards\structures\2013book\00289-1of8.dgn
rd960rh
9:31:44 AM
6/28/2012

LAST REVISION	REVISION	DESCRIPTION:		FDOT DESIGN STANDARDS 2013	CONCRETE BOX CULVERT DETAILS (LRFD)	INDEX NO.	SHEET NO.
01/01/11						289	1

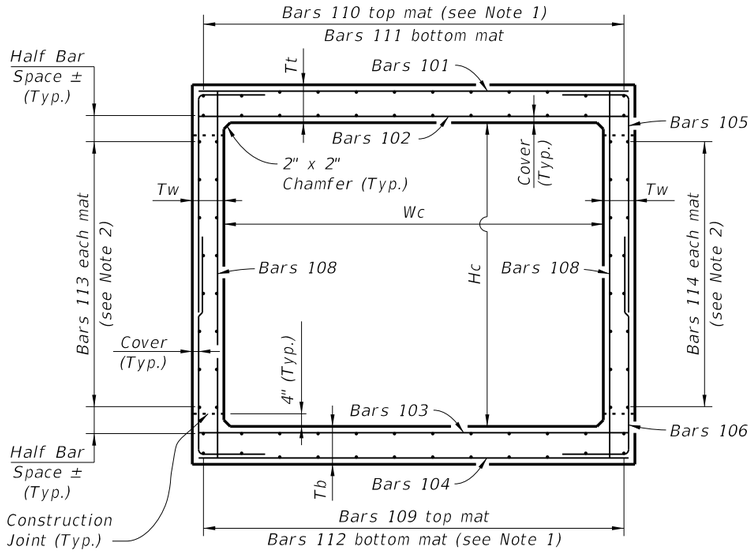

TYPICAL SECTION THRU SINGLE BARREL CULVERT

CULVERT BARREL NOTES:

1. *Space Bars 110 and 112 with a bar in each corner, and at the ℄ of interior walls (for multiple barrel culverts only), and the remaining bars placed at equal spacing shown in the Contract Plans. Adjust last bar spacing when required.*
2. *Place Bars 113 and 114 at spacing shown in the Contract Plans evenly between Bars 109 and 111.*
3. *Locate the first transverse bar from the ends of the culvert at one half the bar spacing, but provide the minimum reinforcement cover and not greater than 4" clear.*

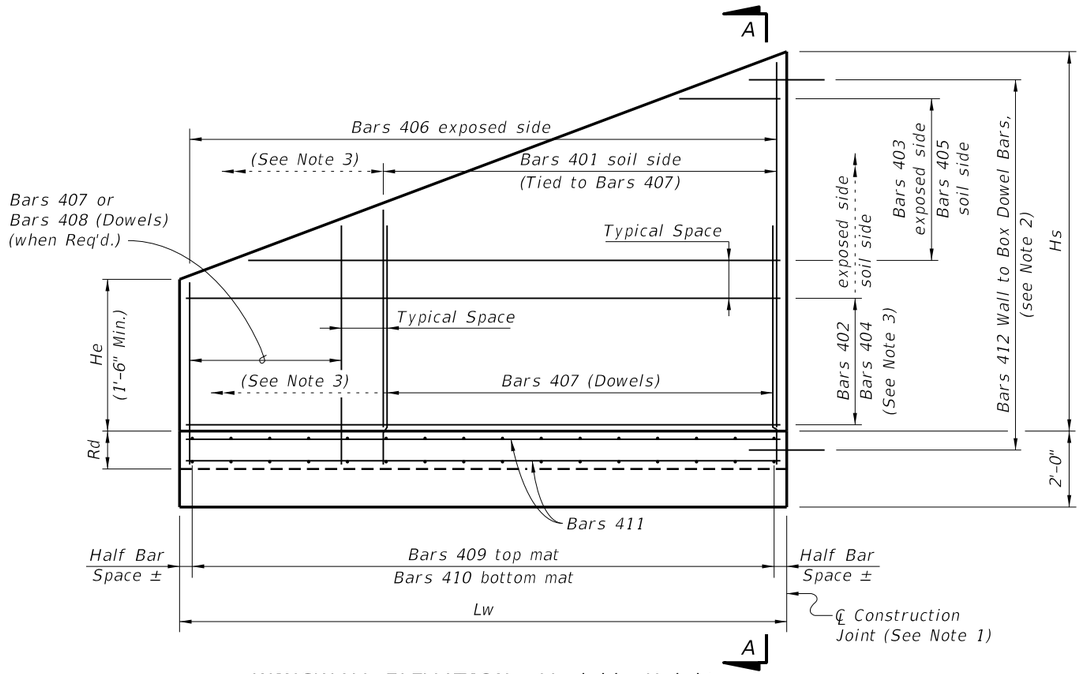

WINGWALL ELEVATION - Variable Height (Left End shown - other corners similar)

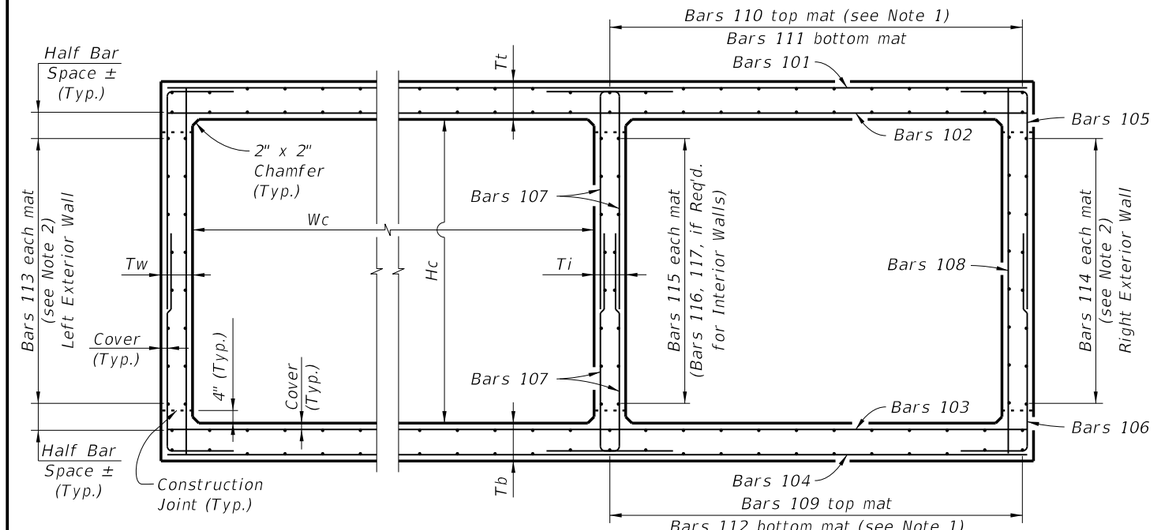

TYPICAL SECTION THRU MULTIPLE BARREL CULVERT

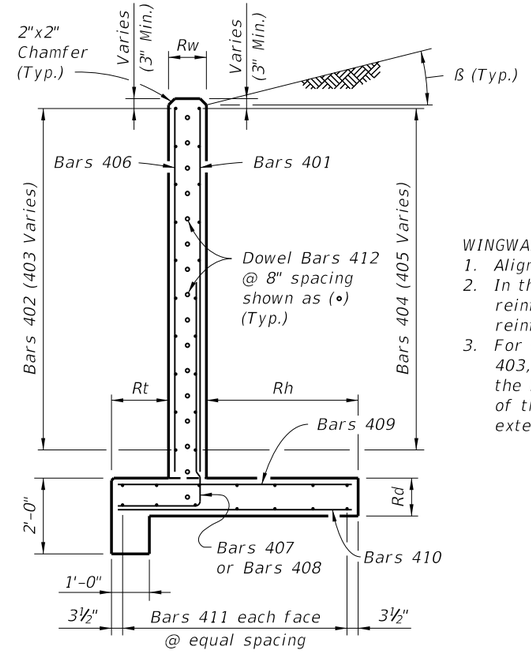

WINGWALL NOTES:

1. *Align construction joint perpendicular to wingwall.*
2. *In the vicinity of the construction joint, field bend reinforcement as necessary to maintain minimum reinforcement cover.*
3. *For constant height wingwalls, variable length Bars 403, 405 & 408 are not required, and as such the limits of Bars 401 & 407 extend the full length of the wingwall, and the limits of Bars 402 & 404 extend to the full height of the wingwall.*

WINGWALL SECTION A-A

C:\d\projects\standards\structures\2013book\00289-2of8.dgn
rd960rh
9:31:47 AM
6/28/2012

LAST REVISION	REVISION	DESCRIPTION:				
01/01/07			FDOT DESIGN STANDARDS 2013	CONCRETE BOX CULVERT DETAILS (LRFD)	INDEX NO. 289	SHEET NO. 2

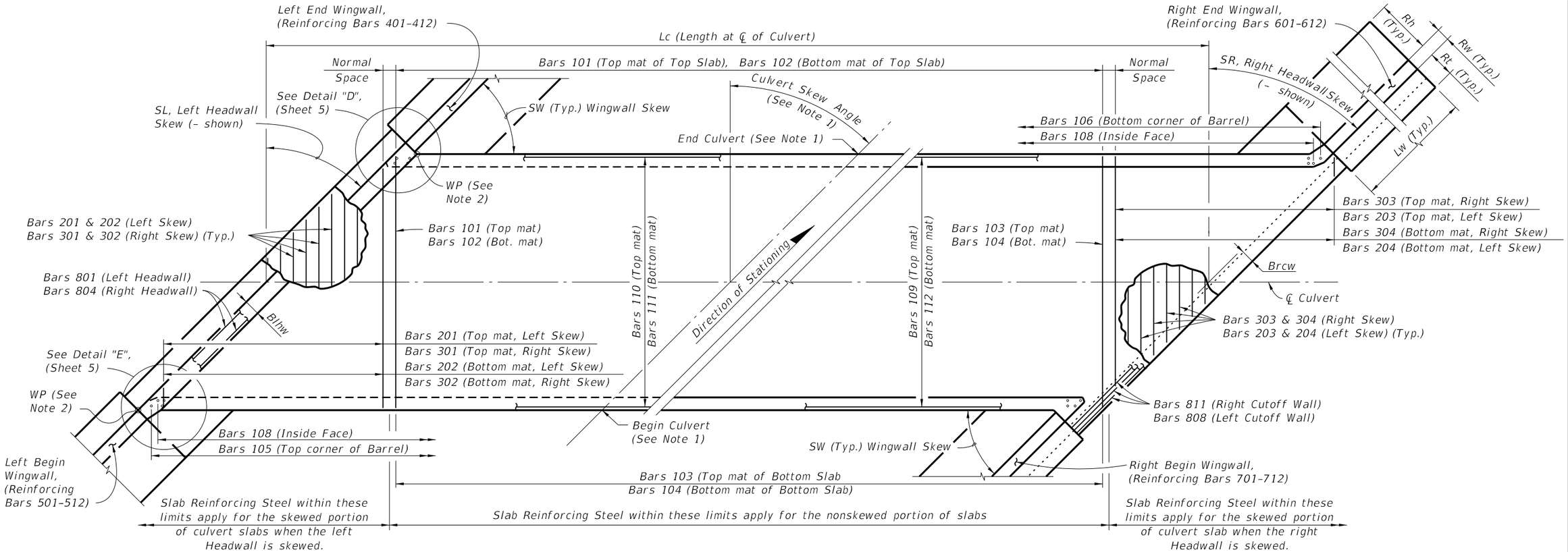

PARTIAL PLAN TOP SLAB
(Left Side, Left Skew)

PARTIAL PLAN BOTTOM SLAB
(Right Side, Right Skew)

NOTES:
1. See Contract Plans for Culvert location, Culvert Skew Angle and Roadway Cross Section.
2. WP = Working Point, used for wingwall layout and location of construction joint. See Detail "C" (Sheet 5).

SINGLE BARREL BOX CULVERT
(Skewed Culvert With Parallel Wingwalls Shown)

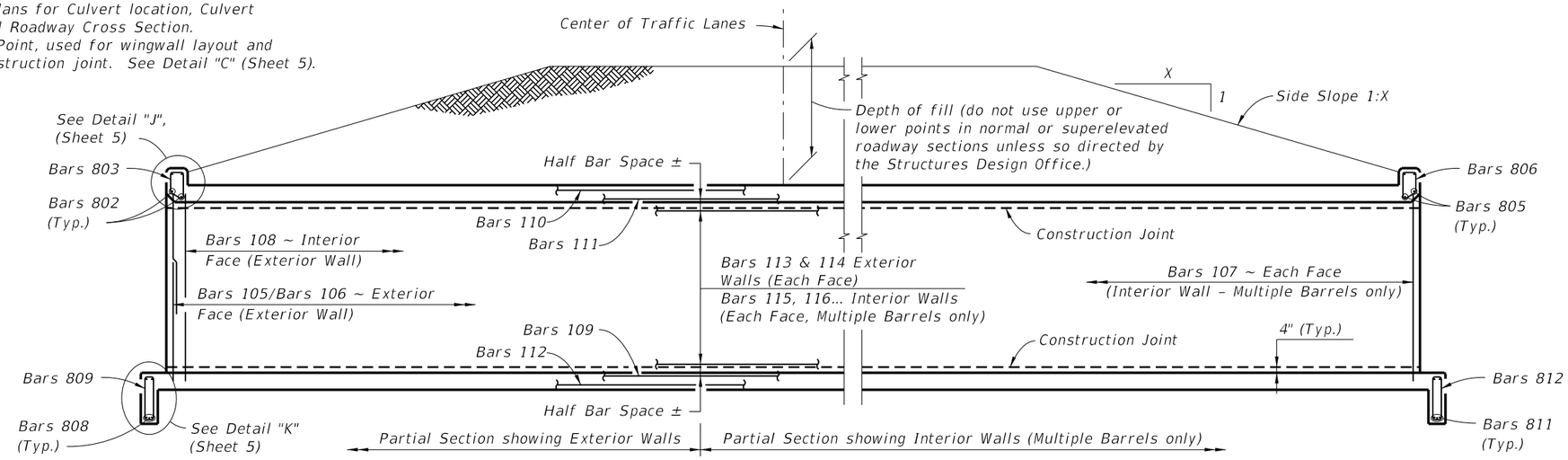

LONGITUDINAL SECTION THRU CULVERT
(Transverse Top & Bottom Slab Reinforcing Not Shown For Clarity)

C:\d\projects\standards\structures\2013book\00289-3of8.dgn
rd960rh
9:31:49 AM
6/28/2012

LAST REVISION	REVISION	DESCRIPTION:				
01/01/07			FDOT DESIGN STANDARDS 2013	CONCRETE BOX CULVERT DETAILS (LRFD)	INDEX NO. 289	SHEET NO. 3

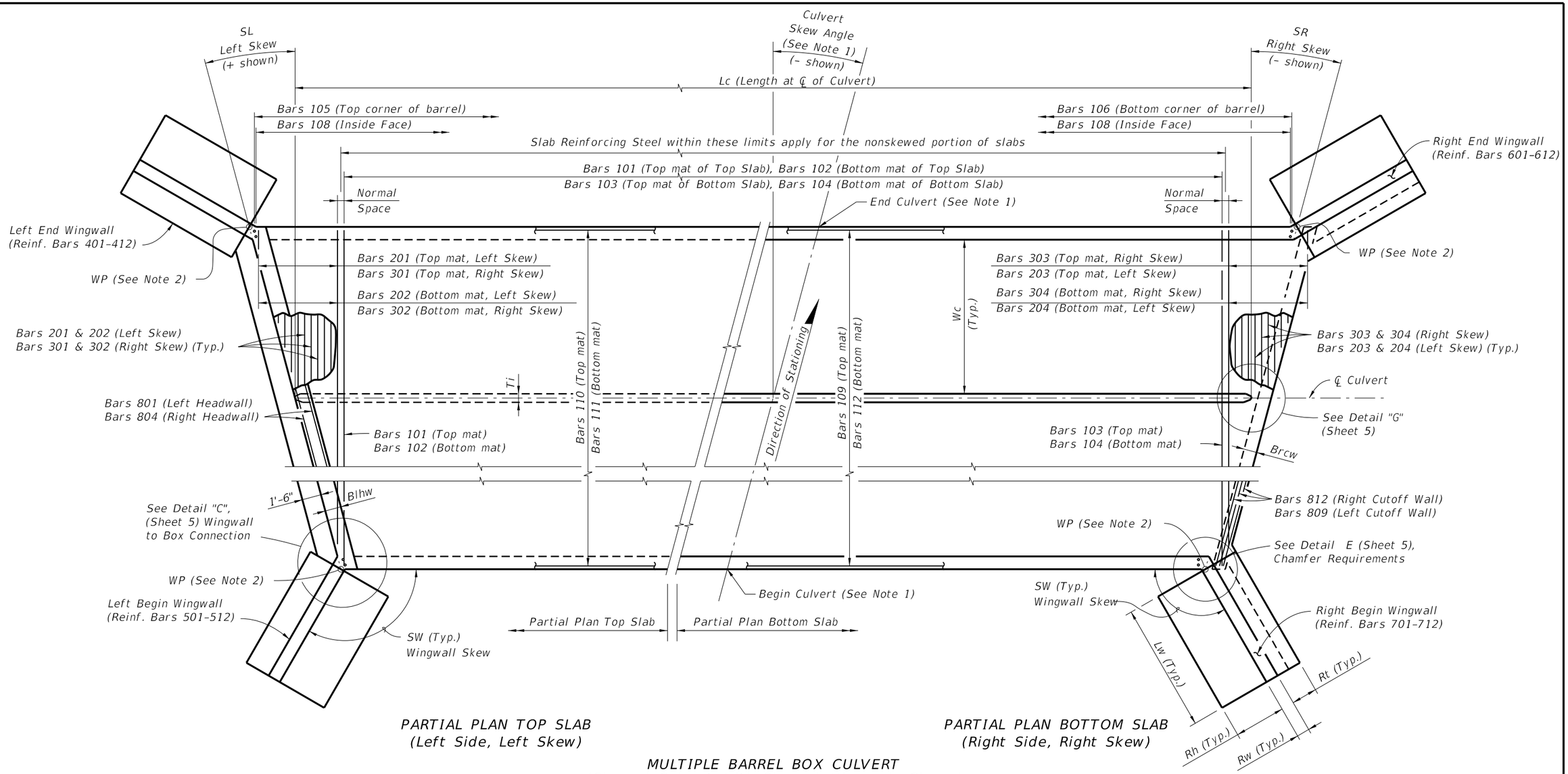

PARTIAL PLAN TOP SLAB
(Left Side, Left Skew)

PARTIAL PLAN BOTTOM SLAB
(Right Side, Right Skew)

MULTIPLE BARREL BOX CULVERT
(Skewed Culvert With Skewed Wingwalls Shown)

NOTES:
1. See Contract Plans for Culvert Location, Culvert Skew Angle and Roadway Cross Section.
2. WP = Working Point, used for wingwall layout and location of construction joint. See Detail C (Sheet 5).

C:\d\projects\standards\structures\2013book\00289-4of8.dgn rd960rh 9:31:51 AM 6/28/2012

LAST REVISION	REVISION	DESCRIPTION:				
01/01/07			FDOT DESIGN STANDARDS 2013	CONCRETE BOX CULVERT DETAILS (LRFD)	INDEX NO. 289	SHEET NO. 4

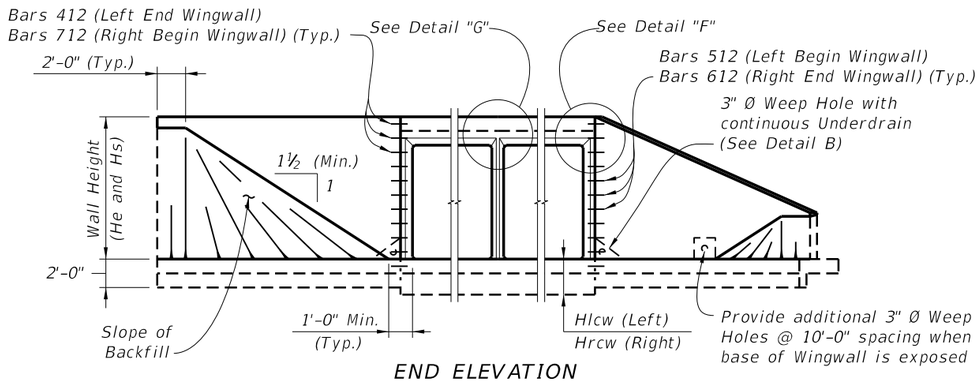

END ELEVATION
(Showing Constant Height And Variable Height Wingwalls)

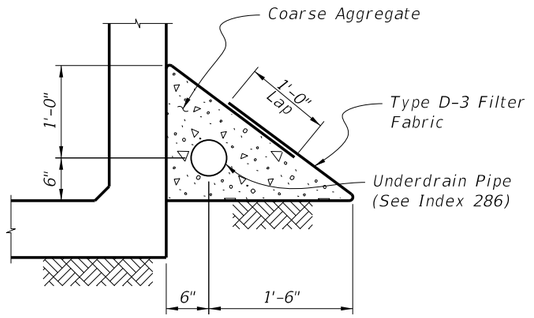

DETAIL "B"
UNDERDRAIN DETAIL
(Similar to Type II ~ Index 286)

NOTES:
1. For small angles, the Contractor may elect to fill the area between the box and the wingwall footing with unreinforced concrete. For wingwall skew angles less then 90 degrees, field bend wingwall reinforcement as necessary while maintaining cover. No additional payment will be made for this work.
2. Location of Construction Joint determined by WP at theoretical intersection of:
   – Soil side face of Headwall and outside face of Box Exterior Wall, for SW≤90°;
   – Outside face of Wingwall and outside face of Box Exterior Wall, for SW>90°.
3. Provide 6" chamfer when angle 'A' is greater than 45°. Maintain minimum wall thickness. Field adjust reinforcing to maintain cover.
4. Wingwall Skew Angles (SW) are measured from the adjacent box exterior wall to the wingwall.
5. Turn or extend Wingwall Cutoff Wall as necessary to meet Box Cutoff Wall.
6. Provide additional reinforcement in the top of the top slab below traffic railings to ensure a minimum area of 0.80 sq. in./ft. transverse reinforcing.

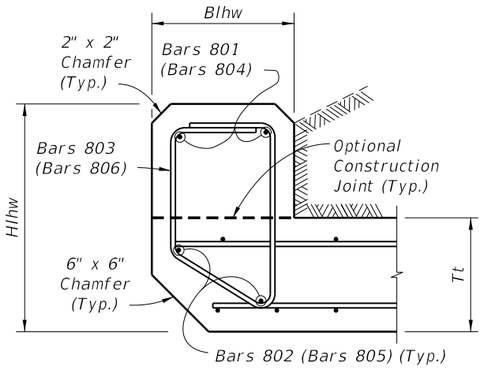

DETAIL "J"
LEFT HEADWALL SECTION
(Right Headwall similar)

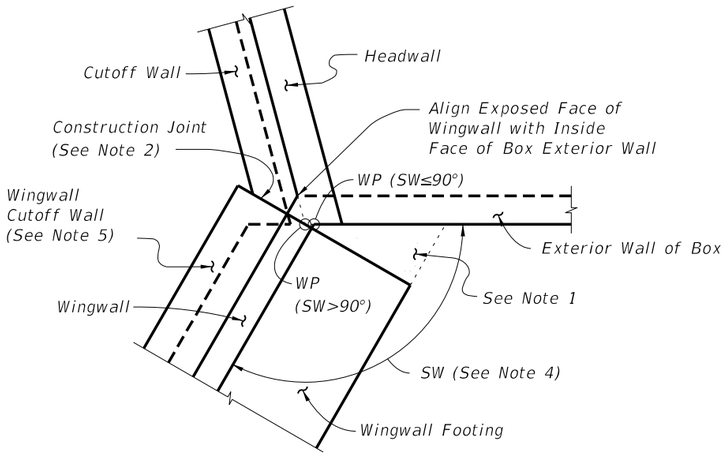

DETAIL "C" - PLAN VIEW
WINGWALL TO BOX CONNECTION
(Left Begin Corner Shown, Other Corners Similar)

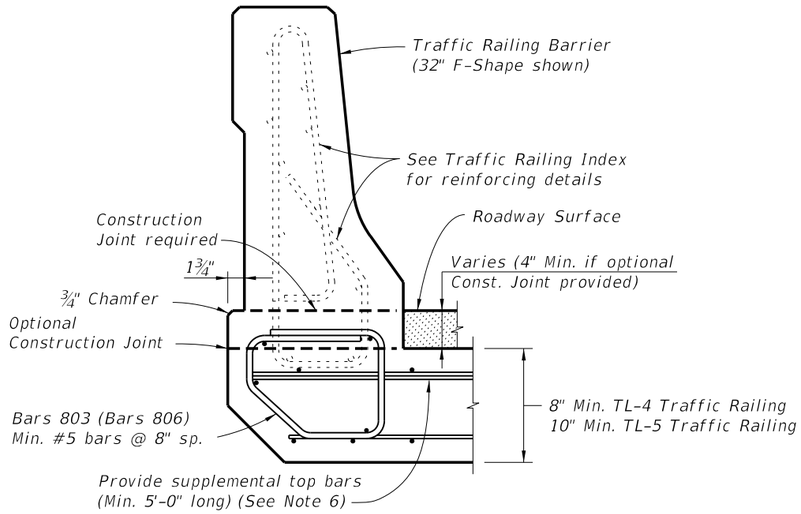

DETAIL "I"
TRAFFIC RAILING ATTACHMENT TO HEADWALL

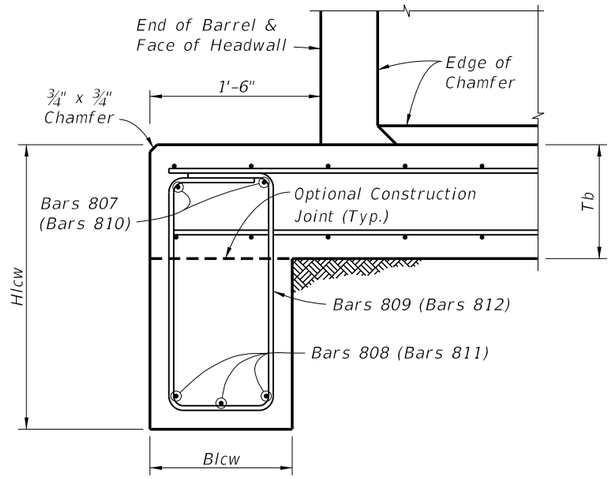

DETAIL "K"
LEFT CUTOFF WALL SECTION
(Right Cutoff Wall similar)

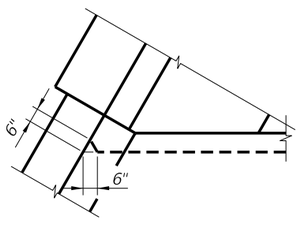

DETAIL "D"

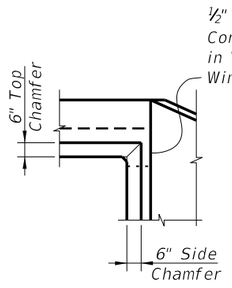

DETAIL "F"

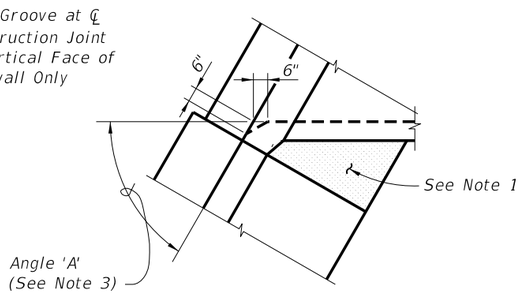

DETAIL "E"

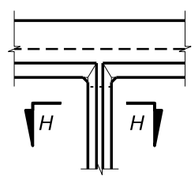

DETAIL "G"

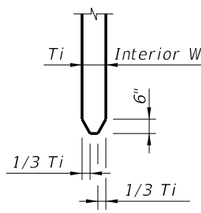

SECTION H-H

CROSS REFERENCE:
See Sheet 3 for locations of Details "D", "E", "J" & "K".
See Sheet 4 for locations of Detail "C".

LAST REVISION	REVISION	DESCRIPTION:				
01/01/10			FDOT DESIGN STANDARDS 2013	CONCRETE BOX CULVERT DETAILS (LRFD)	INDEX NO. 289	SHEET NO. 5

6/28/2012 9:31:53 AM rd960rh C:\d\projects\standards\structures\2013book\00289-5of8.dgn

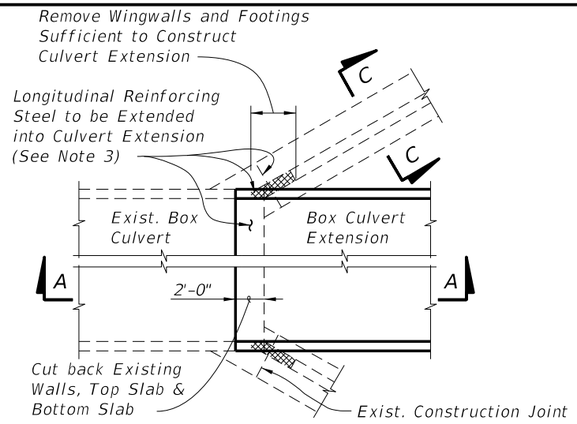

OUTSIDE WALLS OF BOXES

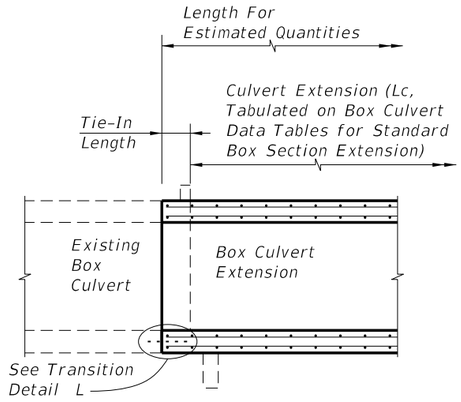

SECTION A-A

FLARED WINGWALL

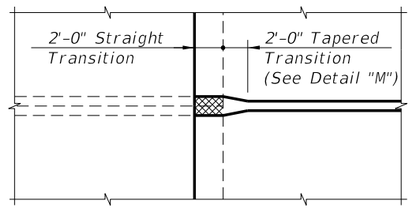

INTERIOR DOUBLE WALLS OF BOXES

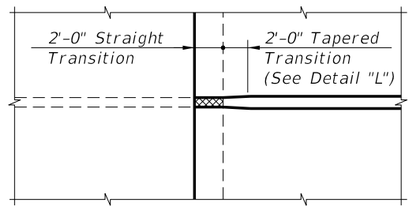

INTERIOR SINGLE WALLS OF BOXES

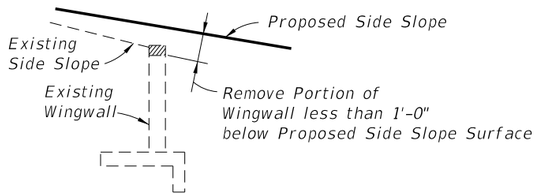

SECTION C-C

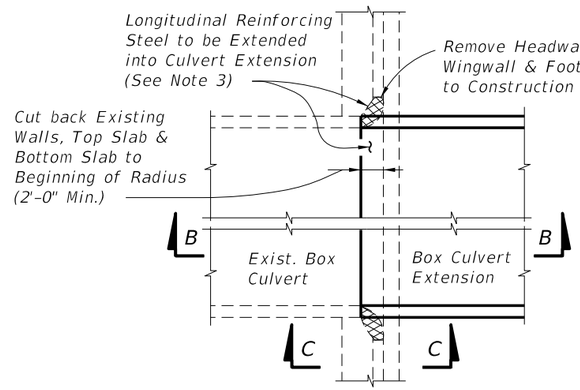

OUTSIDE WALLS OF BOXES

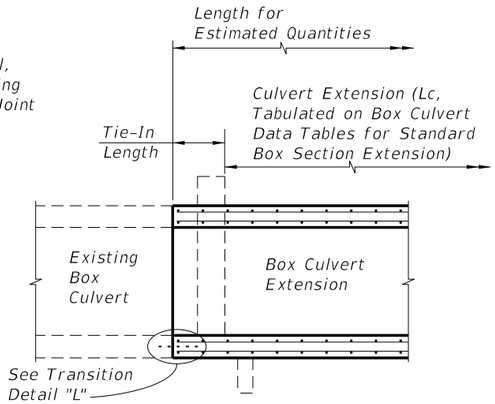

SECTION B-B

STRAIGHT WINGWALL

NOTES:

1. The Box Culvert Data Tables and Reinforcing Bar List do not include the additional quantities needed for dowel connections or transitions from double walls of existing concrete box culverts; the cost for additional reinforcement and the thickened concrete wall in the transitional area shall be included in the costs for concrete and steel in the culvert extension.
2. Cost for removal and disposal of material from existing headwalls, wingwalls and box, and cost of cleaning, straightening and extending or doweling longitudinal reinforcing steel shall be included in the cost for concrete and steel of the culvert extension.
3. Remove existing concrete while avoiding damage to existing reinforcement. Clean and straighten existing reinforcement, lap and tie onto extension reinforcement.
4. Dowel in #4 Bars @ 1'-0" max. spacing into wall/slab when there is a single mat of existing reinforcing steel, otherwise splice 1'-6" as shown for inside reinforcement. Use an Adhesive Bonding Material System in accordance with Specifications Section 416 & 937.
5. Provide additional transverse bars for top and bottom slab, parallel and full width of any skewed joint connection when shown in the Plans.
6. See Box Culvert Data Table notes in Plans for Connection Types allowed.

PLAN VIEWS

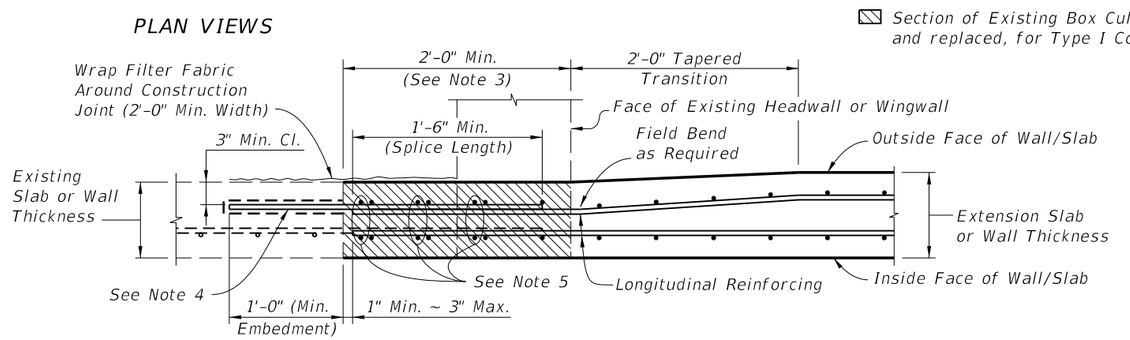

DETAIL "L" - TRANSITION FOR EXTERIOR WALL/SLAB EXTENSION
(Interior Single Walls Similar)

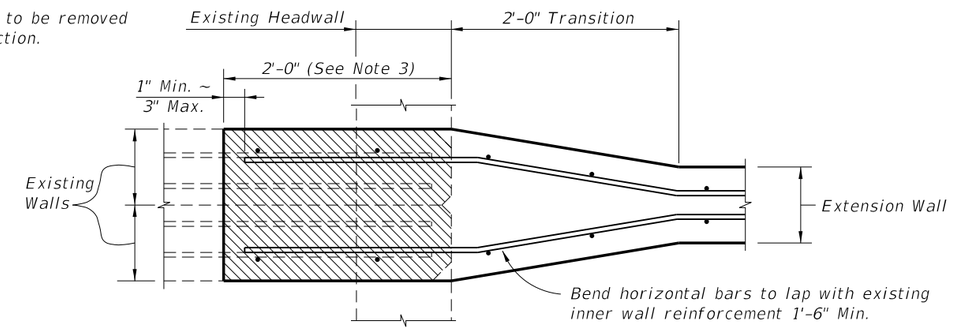

DETAIL "M" - TRANSITION FOR INTERIOR DOUBLE WALLS OF BOX CULVERTS

TYPE I CONNECTION DETAILS FOR CONCRETE BOX CULVERT EXTENSIONS (CUT BACK EXISTING CONCRETE)

LAST REVISION	REVISION	DESCRIPTION:				
01/01/12			FDOT DESIGN STANDARDS 2013	CONCRETE BOX CULVERT DETAILS (LRFD)	INDEX NO. 289	SHEET NO. 6

C:\d\projects\standards\structures\2013book\00289-6of8.dgn
rd960rh
9:31:56 AM
6/28/2012

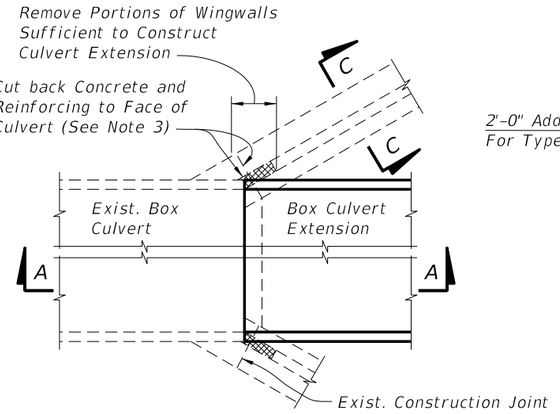

OUTSIDE WALLS OF BOXES

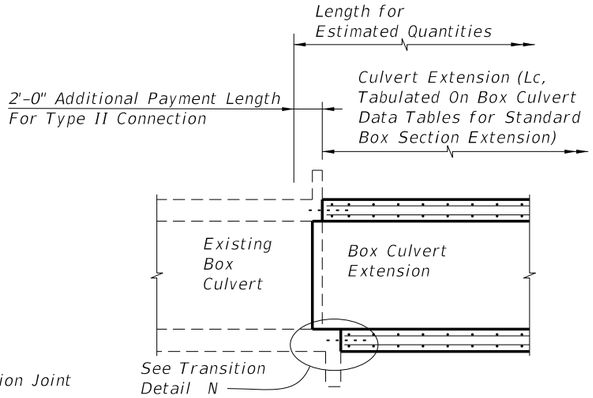

SECTION A-A

FLARED WINGWALL

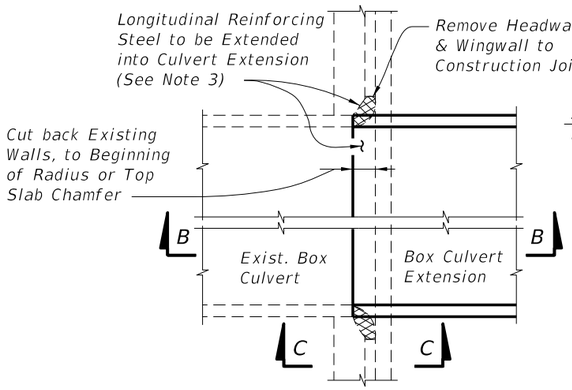

OUTSIDE WALLS OF BOXES

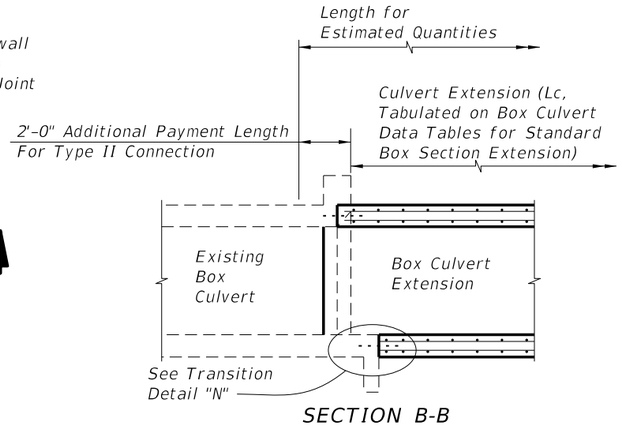

SECTION B-B

STRAIGHT WINGWALL

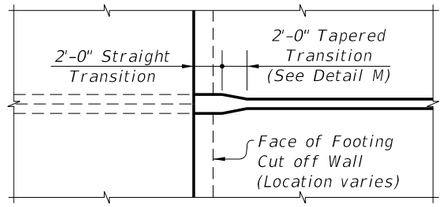

INTERIOR DOUBLE WALLS OF BOXES

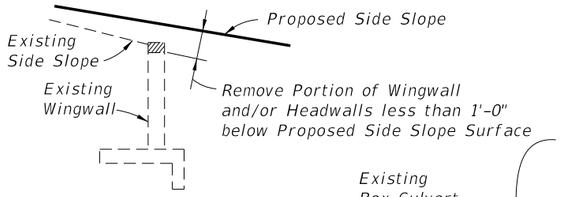

SECTION C-C

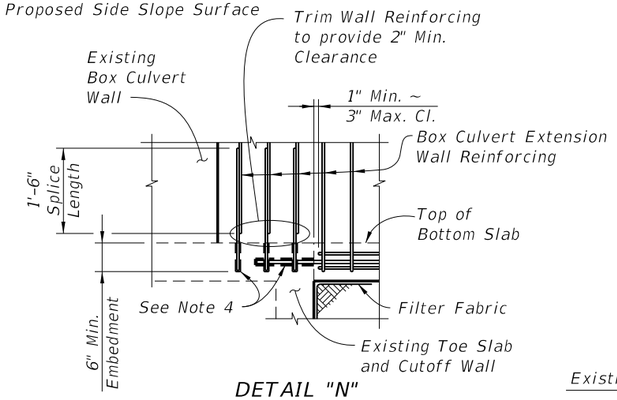

DETAIL "N"

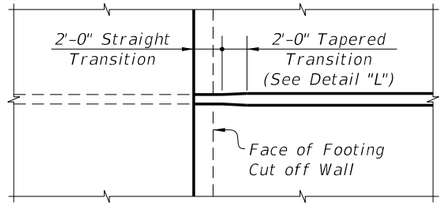

INTERIOR SINGLE WALLS OF BOXES

PLAN VIEWS

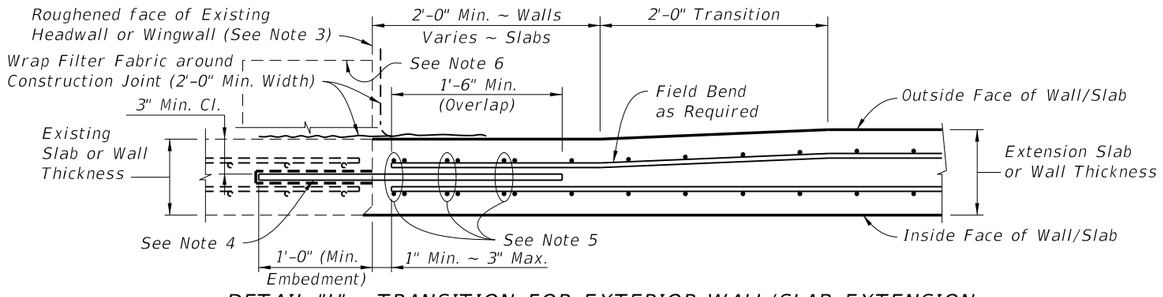

DETAIL "L" - TRANSITION FOR EXTERIOR WALL/SLAB EXTENSION
(Interior Single Walls Similar)

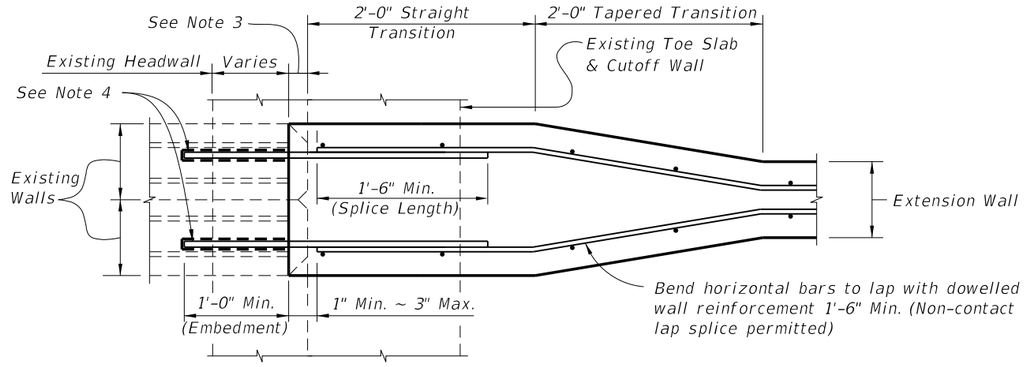

DETAIL "M" - TRANSITION FOR INTERIOR DOUBLE WALLS OF BOX CULVERTS

NOTES:

1. The Box Culvert Data Tables and Reinforcing Bar List do not include the additional quantities needed for dowel connections or transitions from double walls of existing concrete box culverts; the cost for additional reinforcement and the thickened concrete wall in the transitional area shall be included in the costs for concrete and steel in the culvert extension.
2. Cost for roughening and cleaning existing headwalls, wingwalls and box, and cost of doweling longitudinal reinforcing steel shall be included in the cost for concrete and steel of the culvert extension.
3. Remove existing concrete and reinforcing back to edge of any chamfers exceeding 1". Roughen and clean existing or exposed surface and coat with a Type A epoxy bonding compound in accordance with the manufacturer's recommendations.
4. Dowel in #5 Bars @ 1'-0" max. spacing horizontally into center of wall/slab. Provide vertical dowels in footing to match size, alignment and spacing of outside vertical wall reinforcing. Use an Adhesive Bonding Material System in accordance with Specifications Section 416 & 937.
5. Provide additional transverse bars for top and bottom slab, parallel and full width of any skewed joint connection when shown in the Plans.
6. Remove top of existing headwall when necessary to provide 1'-0" clearance below finished grade. Saw cut full width and seal with Type F-2 epoxy compound to protect exposed reinforcing.
7. See Box Culvert Data Table notes in Plans for Connection Types allowed.

TYPE II CONNECTION DETAILS FOR CONCRETE BOX CULVERT EXTENSIONS
(ADHESIVE DOWEL TO EXISTING CONCRETE)

LAST REVISION	REVISION	DESCRIPTION:				
07/01/12			FDOT DESIGN STANDARDS 2013	CONCRETE BOX CULVERT DETAILS (LRFD)	INDEX NO. 289	SHEET NO. 7

C:\dv\projects\standards\structures\2013book\00289-7of8.dgn
rd960rh
9:31:58 AM
6/28/2012

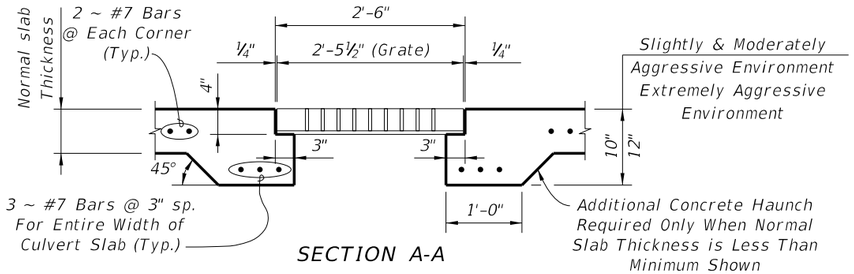

SECTION A-A

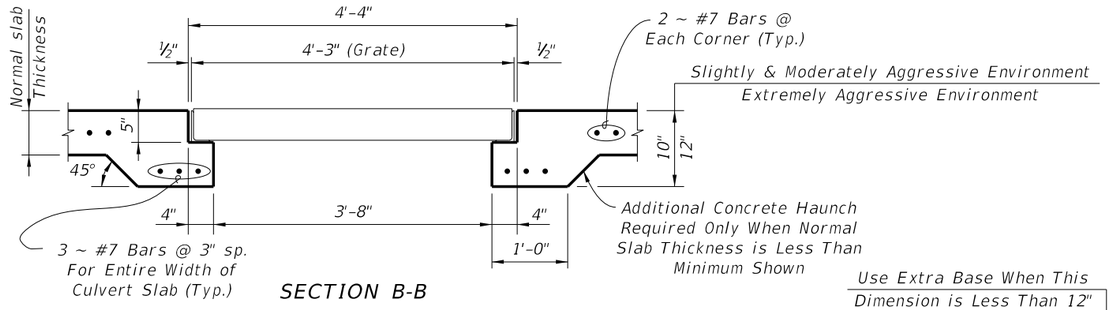

SECTION B-B

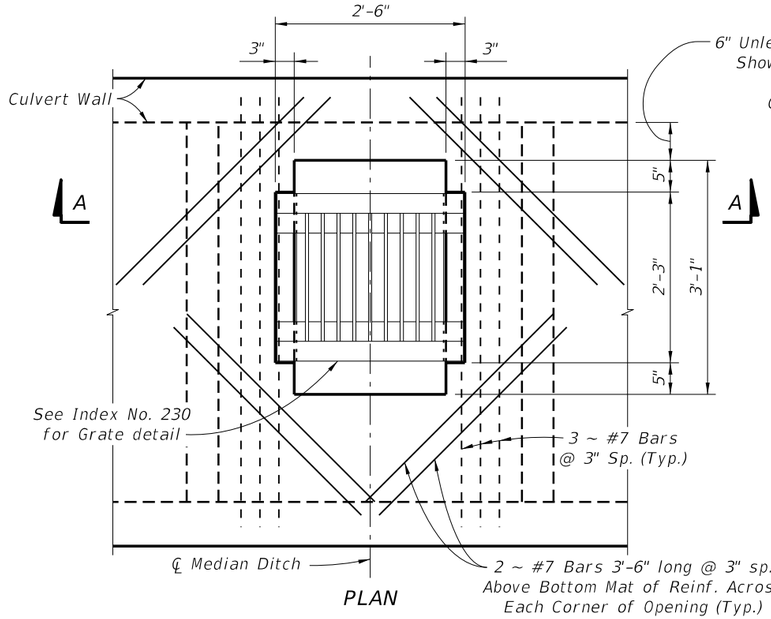

PLAN

INLET TYPE A GRATE

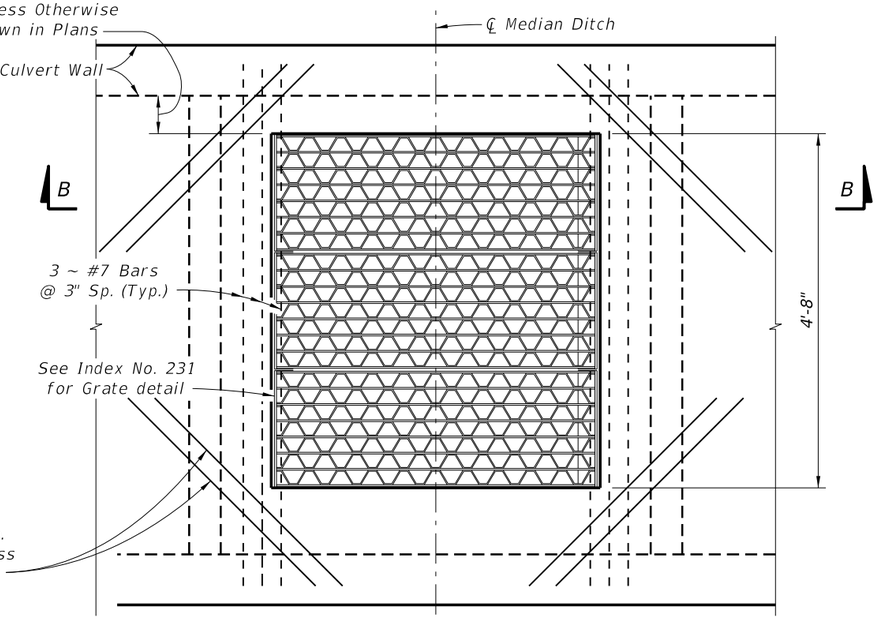

PLAN

INLET TYPE B GRATE

NOTES:
1. Cost of Steel Grating to be included in cost of Box Culvert.
2. All reinforcing shall be 2" clear for Slightly and Moderately Aggressive Environments, and 3" clear for Extremely Aggressive Environments.

INLET IN TOP OF BOX CULVERT

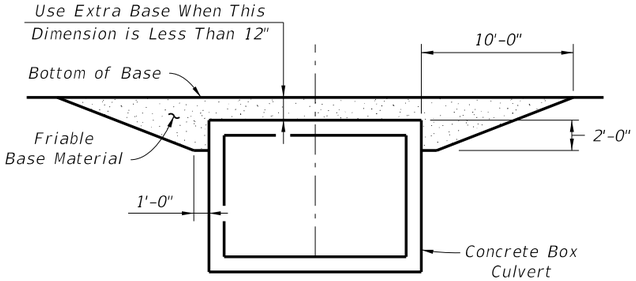

The cost of furnishing and installing extra friable base material shall be included in the cost of the Box Culvert.

FRIABLE BASE

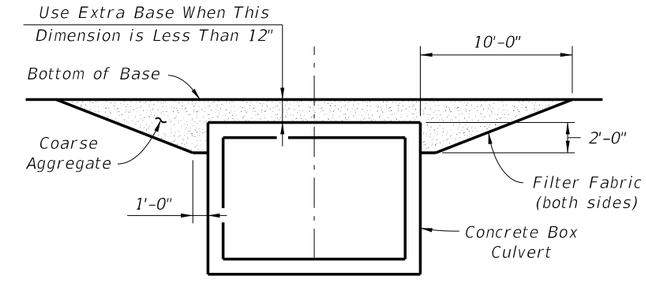

Place coarse aggregate in 6 inch lifts and compact sufficiently as to be firm and unyielding. Provide coarse aggregate gravel or stone meeting the requirements of Specification Section 901-2 or 901-3 respectively. Meet the gradation requirements of Specification Section 901-6, Grades 4, 467, 5, 56 or 57 unless restricted in the plans. Provide Type D-3 filter fabric (see Index No. 199). The cost of furnishing and installing the coarse aggregate and filter fabric shall be included in the cost of the Box Culvert.

ASPHALTIC CONCRETE BASE

NOTE: Extra base is required when cross box culverts are located on facilities subject to high speed traffic (>45 mph) or high traffic volumes (>1600 ADT) and the cover is within the range specified in the notation above.

EXTRA BASE FOR BOX CULVERTS CROSSING UNDER FLEXIBLE PAVEMENT

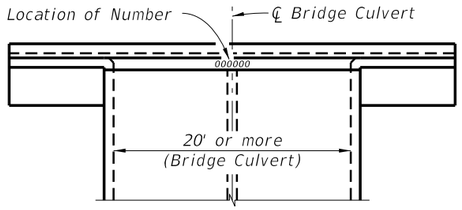

The number is to be placed in the center of the top surface of all bridge culvert headwalls. For Bridge Number see Plan-Profile sheet(s).

TOP VIEW OF HEADWALL

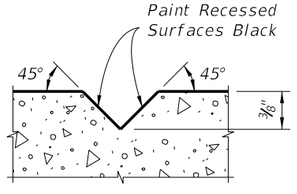

SECTION THRU RECESSED V-GROOVE TO FORM INSCRIBED FIGURES

Black Plastic Figures 3" in height as approved by the Engineer may be used in lieu of numbers formed by ⅜" V-Grooves. V-Grooves shall be formed by preformed figures.

BRIDGE CULVERT NUMBER LOCATION

C:\d\projects\standards\structures\2013book\00289-8of8.dgn rd960rh 9:32:00 AM 6/28/2012

LAST REVISION	REVISION	DESCRIPTION:				INDEX NO.	SHEET NO.
01/01/07				FDOT DESIGN STANDARDS 2013	CONCRETE BOX CULVERT DETAILS (LRFD)	289	8