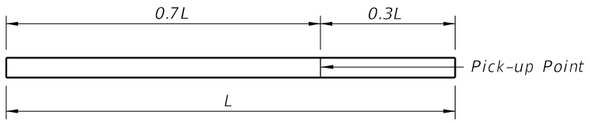

1-POINT PICK-UP

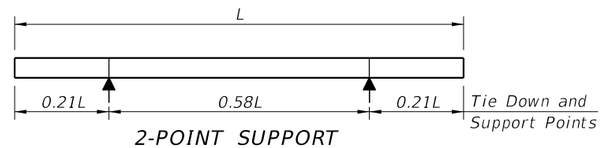

2-POINT SUPPORT

2-POINT PICK-UP

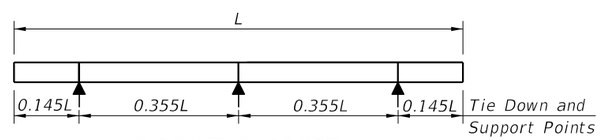

3-POINT SUPPORT

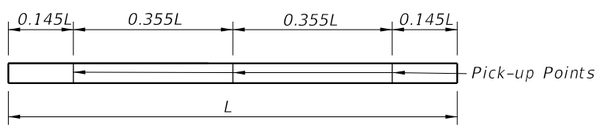

3-POINT PICK-UP

PILE PICK-UP DETAILS

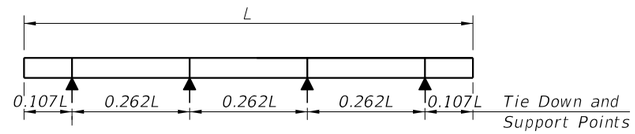

4-POINT SUPPORT

STORAGE AND TRANSPORTATION SUPPORT DETAILS

TABLE OF MAXIMUM PILE PICK-UP AND SUPPORT LENGTHS								
	D = Square Pile Size (inches)						Required Storage and Transportation Detail	Pick-Up Detail
	12	14	18	20	24	30		
Maximum Pile Length (Feet)	48	52	59	62	68	87	2, 3, or 4 point	1 Point
	69	75	85	89	98	124	2, 3, or 4 point	2 Point
	99	107	121	128	140	178	3 or 4 point	3 Point

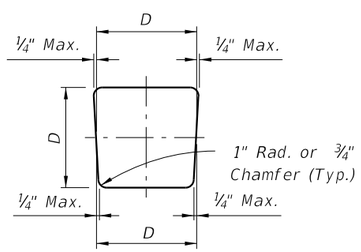

TYPICAL PILE SHAPE
FOR MOLD FORMS

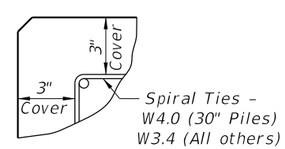

DETAIL SHOWING
TYPICAL COVER

PRESTRESSED CONCRETE PILE NOTES:

DESIGN SPECIFICATIONS:
Florida Department of Transportation (FDOT) "Structures Design Guidelines", current edition.

American Association of State Highway and Transportation Officials (AASHTO) "LRFD Bridge Design Specifications", current edition.

SPIRAL TIES:
Each wrap of spirals shall be tied to at least two corner strands. One turn required for spiral splices.

CONCRETE CLASS:
Concrete for all piles shall be Class V (Special) except designated High Moment Capacity Piles (Index 20631) shall be Class VI.

Concrete for the High Capacity Collar Splice shall be Class V (Special).

See "GENERAL NOTES" in Structures Plans for any specific locations where the use of Silica Fume is required.

CONCRETE STRENGTH:
The pile cylinder strength shall be 6,000 psi minimum at 28 days and 4,000 psi minimum at time of transfer of the Prestressing Force. The cylinder strength for designated High Moment Capacity Piles (Index 20631) shall be 8,500 psi minimum at 28 days and 6,500 psi minimum at time of transfer of the Prestressing Force.

SPLICE BONDING MATERIAL:
The material to fill dowel holes and form the joint between pile sections shall be a Type B Epoxy Compound in accordance with Specification Section 926 and shall be contained on the Qualified Products List (QPL). Use Epoxy Bonding Compound or Epoxy Mortar as recommended by the Manufacturer. For Epoxy Mortar only use sand or other filler material supplied by the manufacturer and in the proportions recommended.

PICK-UP POINTS:
Piles shall be marked at the pick-up points to indicate proper points for attaching handling lines.

REINFORCING STEEL:
All reinforcing steel shall be Grade 60, except that spiral ties shall be manufactured from cold-drawn steel wire meeting the requirements of ASTM A82.

PRESTRESSING STEEL:
Prestressing steel shall be seven-wire strand, Grade 270, Low-Relaxation Strand (LRS).

CORROSION PROTECTION OF EXPOSED STRANDS:
For all piles having ends exposed to the environment and not embedded under final conditions, protect the strands as follows: Prior to shipment, cut strands at appropiate end(s) back to a minmum depth of 1 inch below the concrete surface and patch with a Type F epoxy compound meeting the requirements of Specification Section 926.

NOTES:

1. For Sections D-D, E-E, & F-F see Index Nos. 20612, 20614, 20618, 20620, 20624 or 20630 for applicable concrete pile size and Pile Splice Reinforcement Details.

2. Prestressing strands, spiral ties and/or reinforcement are not shown for clarity.

3. In cases where pile splices are desired due to length limitations in shipping and/or handling, the "Drivable Preplanned Prestressed Precast Splice Detail" shall be used. Mechanical Pile Splices contained on the Qualified Products List (QPL) may also be used.

4. When preformed dowel holes are utilized, the 1" spiral tie pitch shall be continued to 4'-0" below the head of the pile, See Index Nos. 20618, 20620 & 20624. Preformed holes shall utilize either removable preforming material or stay-in-place corrugated galvanized steel ducts. Stay-in-place ducts shall be fabricated from galvanized sheet steel meeting the requirements of ASTM A653, Coating Designation G90, 26 gauge. Ducts shall be 2" diameter with a minimum corrugation (rib) height of 0.12 in. Ducts shall be fabricated with either welded or interlocked seams. Galvanizing of welded seams will not be required.

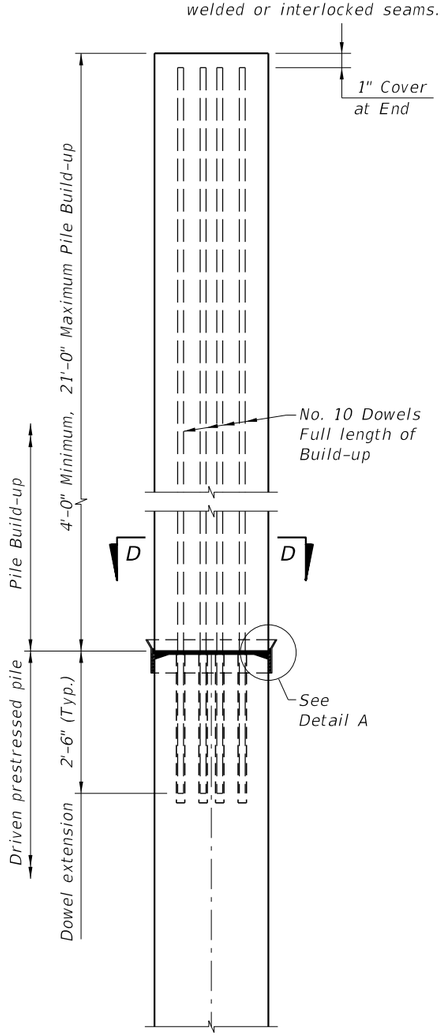

NONDRIVABLE UNFORESEEN REINFORCED PRECAST PILE BUILD-UP DETAIL

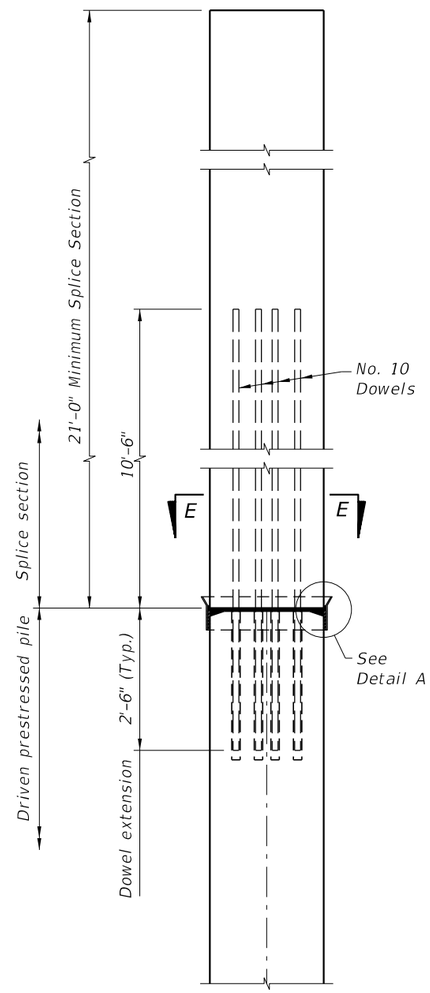

DRIVABLE UNFORESEEN PRESTRESSED PRECAST PILE SPLICE DETAIL

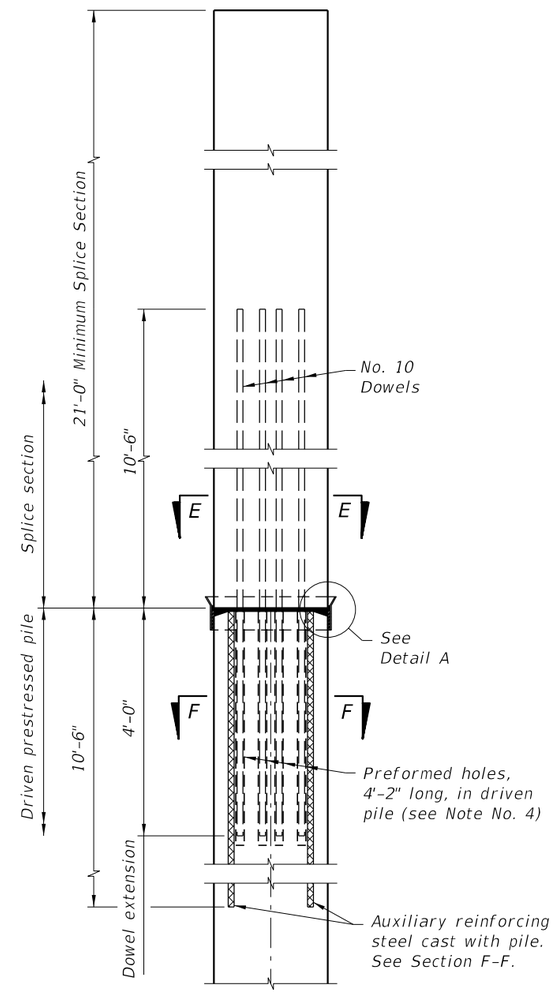

DRIVABLE PREPLANNED PRESTRESSED PRECAST PILE SPLICE DETAIL

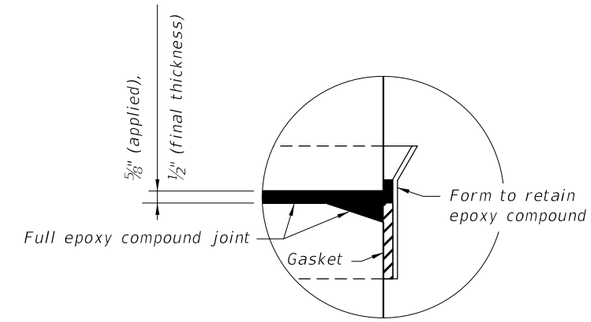

DETAIL A

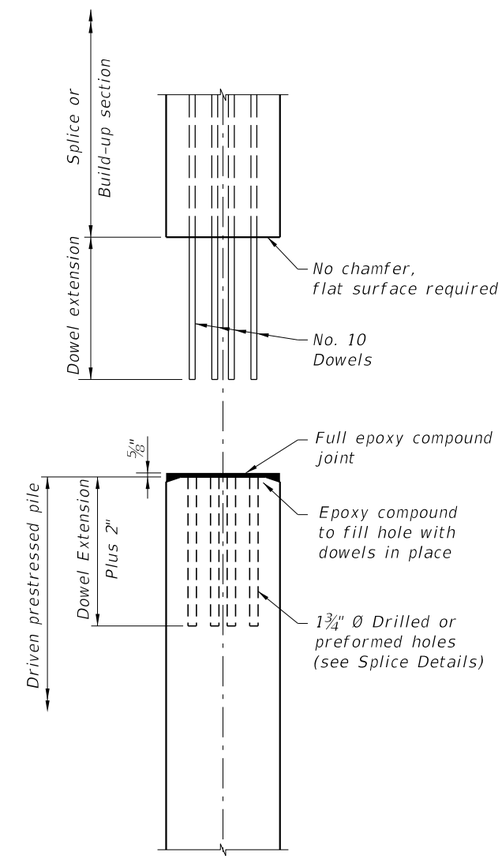

TYPICAL SPLICE BEFORE BONDING

LAST REVISION	REVISION	DESCRIPTION:			INDEX NO.	SHEET NO.
01/01/12			FDOT DESIGN STANDARDS FY 2012/2013	SQUARE PRESTRESSED CONCRETE PILE SPLICES	20601	1

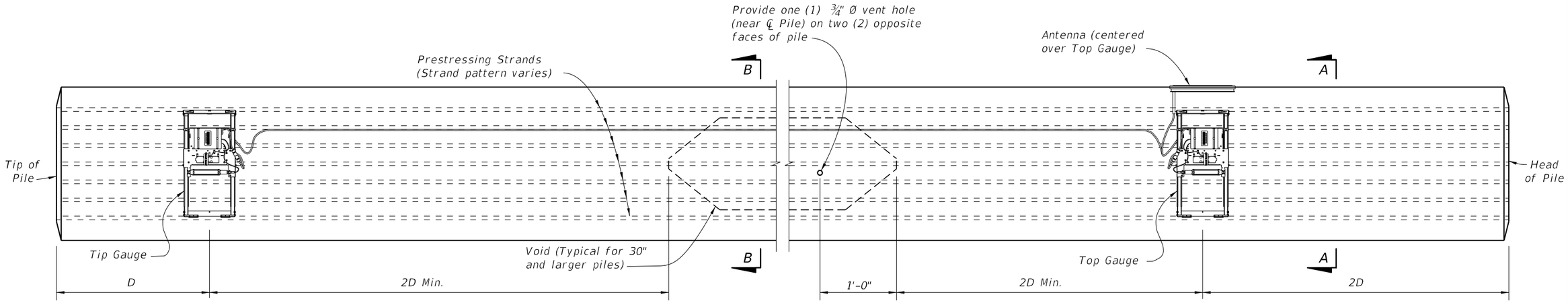

ELEVATION

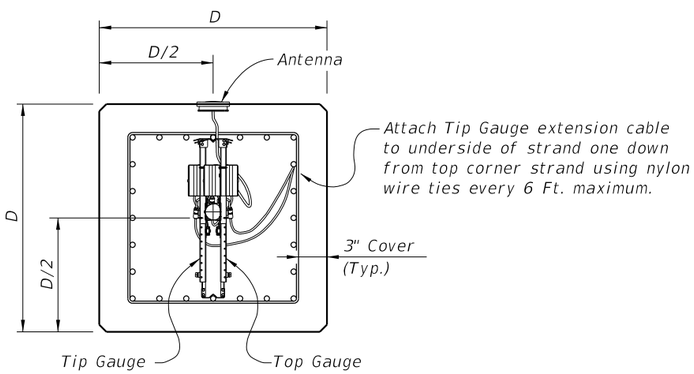

SECTION A-A
(Strand Pattern with odd number of strands per face)

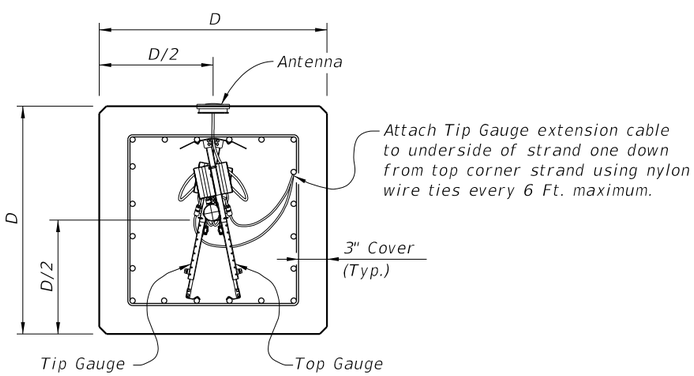

SECTION A-A
(Strand Pattern with even number of strands per face)

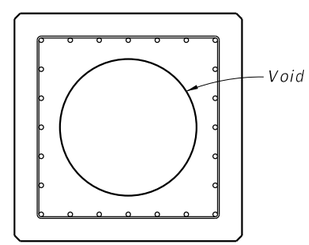

SECTION B-B
(Showing Voided Pile, Solid Pile Similar)

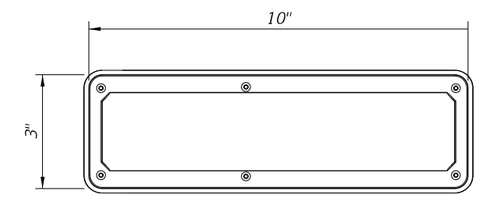

ANTENNA TOP VIEW

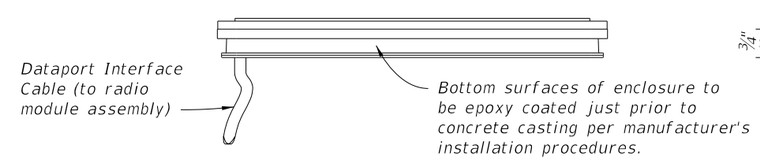

ANTENNA SIDE VIEW

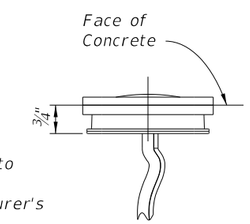

ANTENNA END VIEW

NOTE:
Provide EDC Instrumentation in square prestressed concrete piles (18" and larger) in accordance with Specification Section 455 for bridge foundations.

LAST REVISION	REVISION	DESCRIPTION:			INDEX NO.	SHEET NO.
01/01/12			FDOT DESIGN STANDARDS FY 2012/2013	EDC INSTRUMENTATION FOR SQUARE PRESTRESSED CONCRETE PILES	20602	1

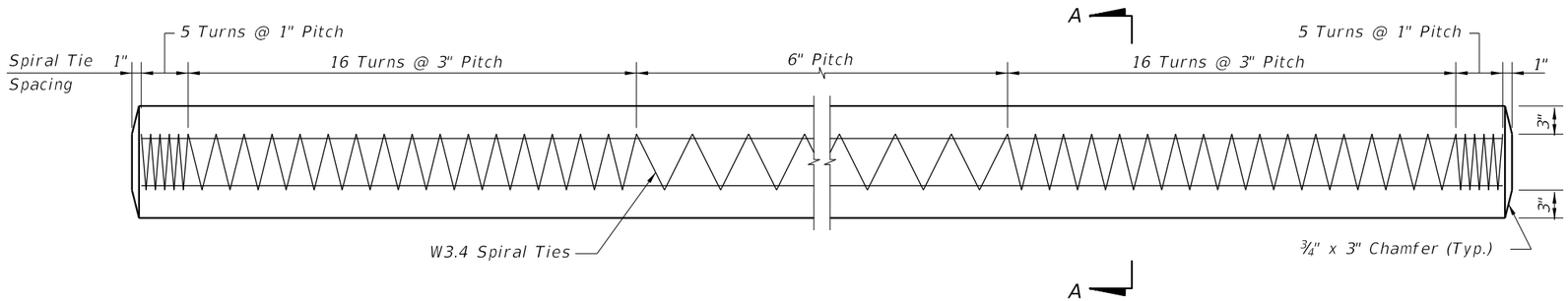

ELEVATION

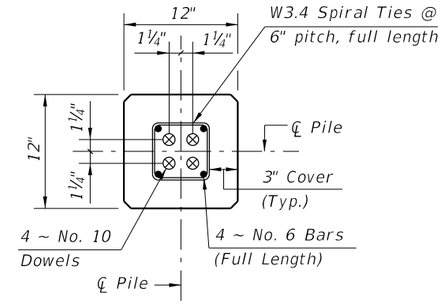

SECTION D-D

(See Nondrivable Unforeseen Reinforced Precast Pile Splice Detail)

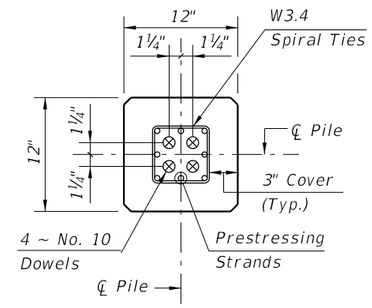

SECTION E-E

(See Drivable Unforeseen Prestressed Precast Pile Splice Detail)

PILE SPLICE REINFORCEMENT DETAILS

ALTERNATE STRAND PATTERNS

4 ~ 0.6" Ø, Grade 270 LRS, at 44 kips
8 ~ ½" Ø (Special), Grade 270 LRS, at 25 kips
8 ~ ½" Ø, Grade 270 LRS, at 24 kips
8 ~ 7/16" Ø, Grade 270 LRS, at 23 kips
12 ~ ⅜" Ø, Grade 270 LRS, at 16 kips

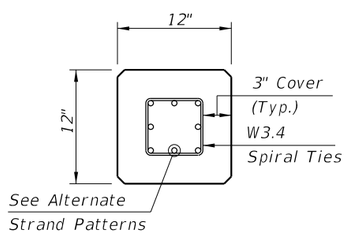

SECTION A-A

NOTES:

1. Work this Index with Index No. 20600 - Notes and Details for Square Prestressed Concrete Piles and Index No. 20601 - Square Prestressed Concrete Pile Splices.
2. Any of the given Alternate Strand Patterns may be utilized. The strands shall be located as follows:
   Place one strand at each corner and place the remaining strands equally spaced between the corner strands.
   The total strand pattern shall be concentric with the nominal concrete section of the pile.

LAST REVISION	REVISION	DESCRIPTION:				INDEX NO.	SHEET NO.
01/01/12			FDOT DESIGN STANDARDS FY 2012/2013	12" SQUARE PRESTRESSED CONCRETE PILE		20612	1

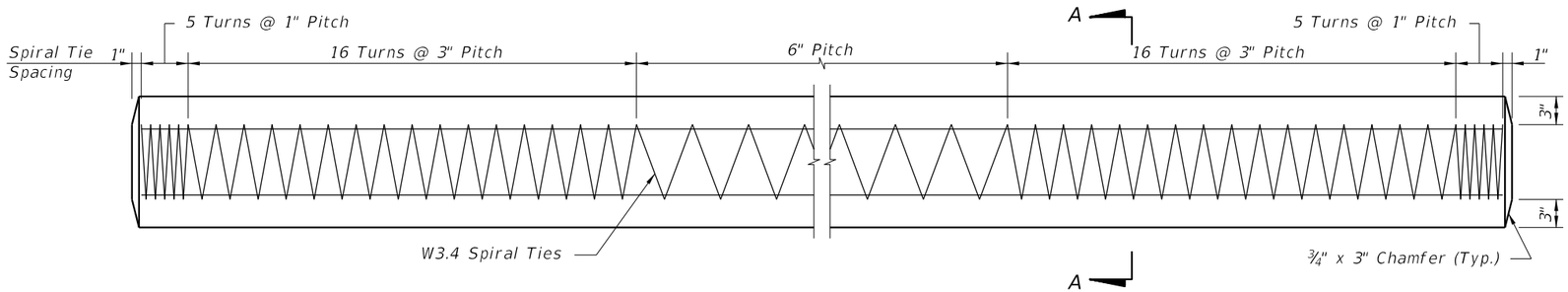

ELEVATION

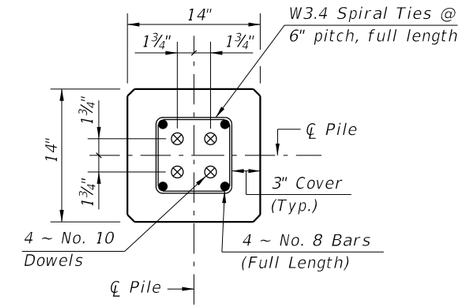

SECTION D-D

(See Nondrivable Unforeseen Reinforced Precast Splice Detail)

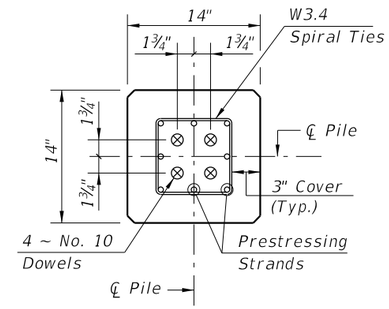

SECTION E-E

(See Drivable Unforeseen Prestressed Precast Splice Detail)

PILE SPLICE REINFORCEMENT DETAILS

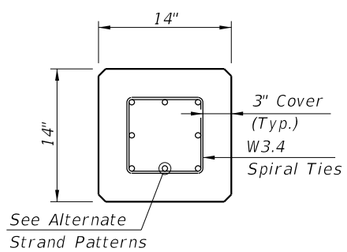

SECTION A-A

ALTERNATE STRAND PATTERNS

8 ~ 0.6" Ø, Grade 270 LRS, at 33 kips
8 ~ ½" Ø (Special), Grade 270 LRS, at 31 kips
8 ~ ½" Ø, Grade 270 LRS, at 31 kips
12 ~ 7/16" Ø, Grade 270 LRS, at 21 kips
16 ~ ⅜" Ø, Grade 270 LRS, at 16 kips

NOTES:

1. Work this Index with Index No. 20600 – Notes and Details for Square Prestressed Concrete Piles and Index No. 20601 – Square Prestressed Concrete Pile Splices.
2. Any of the given Alternate Strand Patterns may be utilized. The strands shall be located as follows:
   Place one strand at each corner and place the remaining strands equally spaced between the corner strands.
   The total strand pattern shall be concentric with the nominal concrete section of the pile.

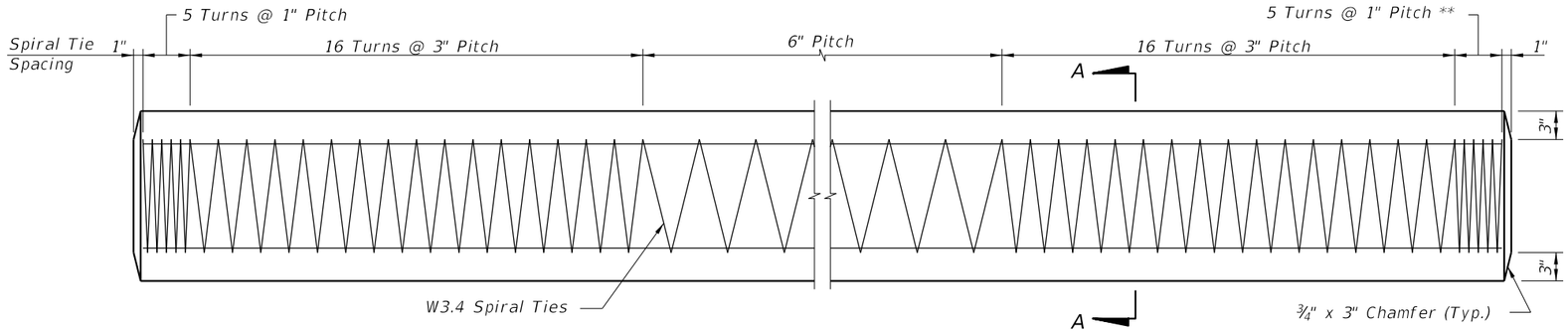

ELEVATION

** See Note No. 4 on Index No. 20601

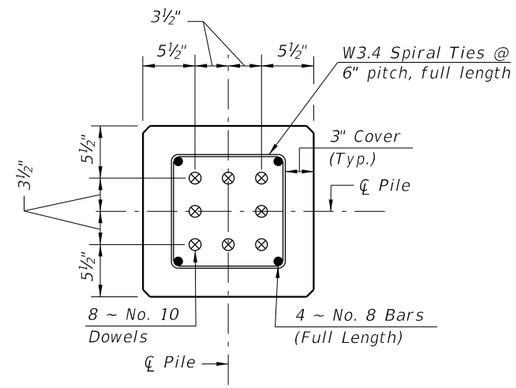

SECTION D-D

(See Nondrivable Unforeseen Reinforced Precast Splice Detail)

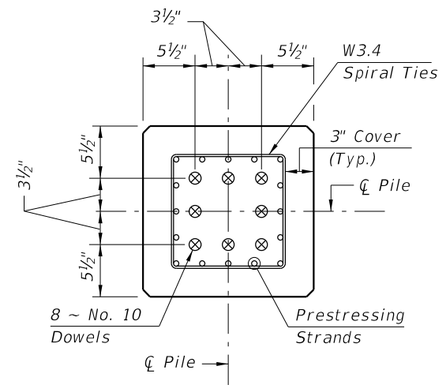

SECTION E-E

(See Drivable Prestressed Precast Splice Detail)

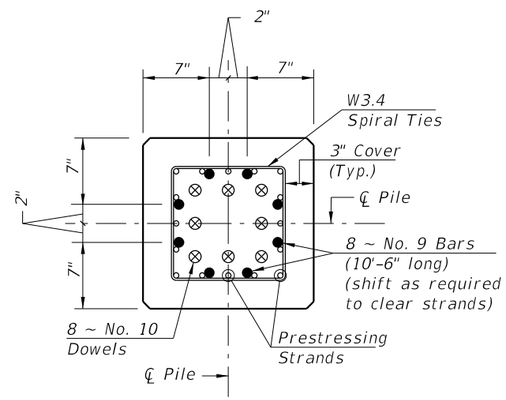

SECTION F-F

(See Drivable Preplanned Splice Detail)

PILE SPLICE REINFORCEMENT DETAILS

ALTERNATE STRAND PATTERNS

12 ~ 0.6" Ø, Grade 270 LRS, at 35 kips
12 ~ ½" Ø (Special), Grade 270 LRS, at 34 kips
16 ~ ½" Ø, Grade 270 LRS, at 26 kips
20 ~ 7/16" Ø, Grade 270 LRS, at 21 kips
24 ~ ⅜" Ø, Grade 270 LRS, at 17 kips

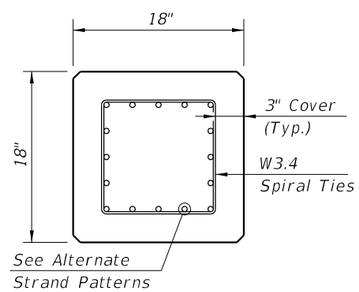

SECTION A-A

NOTES:

1. Work this Index with Index No. 20600 - Notes and Details for Square Prestressed Concrete Piles and Index No. 20601 - Square Prestressed Concrete Pile Splices.
2. Any of the given Alternate Strand Patterns may be utilized. The strands shall be located as follows:
   Place one strand at each corner and place the remaining strands equally spaced between the corner strands.
   The total strand pattern shall be concentric with the nominal concrete section of the pile.

LAST REVISION	REVISION	DESCRIPTION:				INDEX NO.	SHEET NO.
01/01/12			STATE OF FLORIDA DEPARTMENT OF TRANSPORTATION	FDOT DESIGN STANDARDS FY 2012/2013	18" SQUARE PRESTRESSED CONCRETE PILE	20618	1

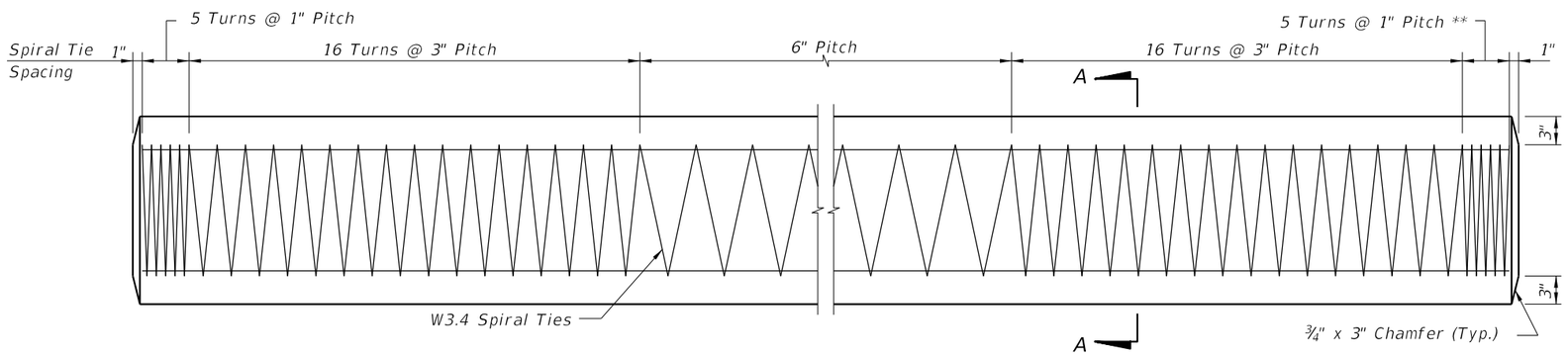

ELEVATION

** See Note No. 4 on Index No. 20601

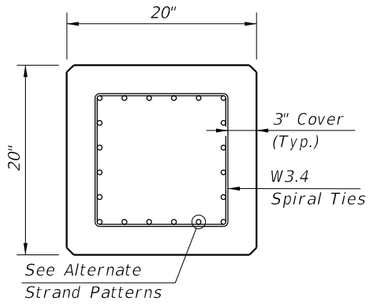

SECTION A-A

ALTERNATE STRAND PATTERNS

12 ~ 0.6" Ø, Grade 270 LRS, at 42 kips
16 ~ ½" Ø (Special), Grade 270 LRS, at 31 kips
16 ~ ½" Ø, Grade 270 LRS, at 31 kips
24 ~ 7/16" Ø, Grade 270 LRS, at 21 kips

NOTES:

1. Work this Index with Index No. 20600 – Notes and Details for Square Prestressed Concrete Piles and Index No. 20601 – Square Prestressed Concrete Pile Splices.
2. Any of the given Alternate Strand Patterns may be utilized. The strands shall be located as follows:
   Place one strand at each corner and place the remaining strands equally spaced between the corner strands.
   The total strand pattern shall be concentric with the nominal concrete section of the pile.

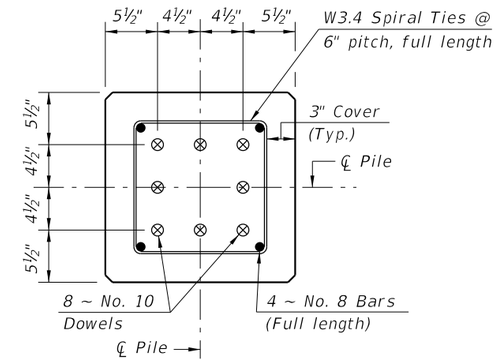

SECTION D-D

(See Nondrivable Unforeseen Reinforced Precast Pile Splice Detail)

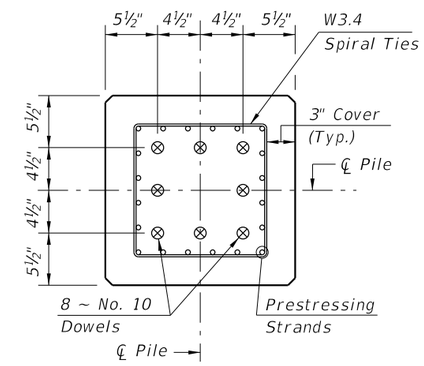

SECTION E-E

(See Drivable Prestressed Precast Pile Splice Detail)

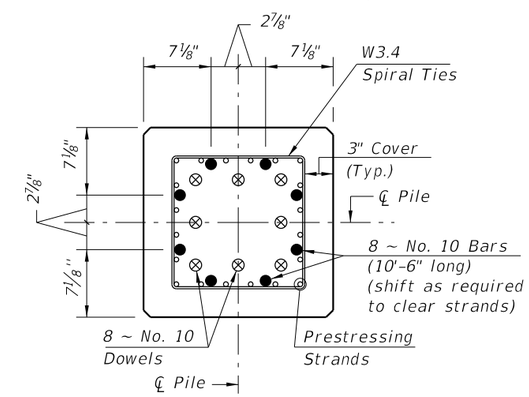

SECTION F-F

(See Drivable Preplanned Pile Splice Detail)

PILE SPLICE REINFORCEMENT DETAILS

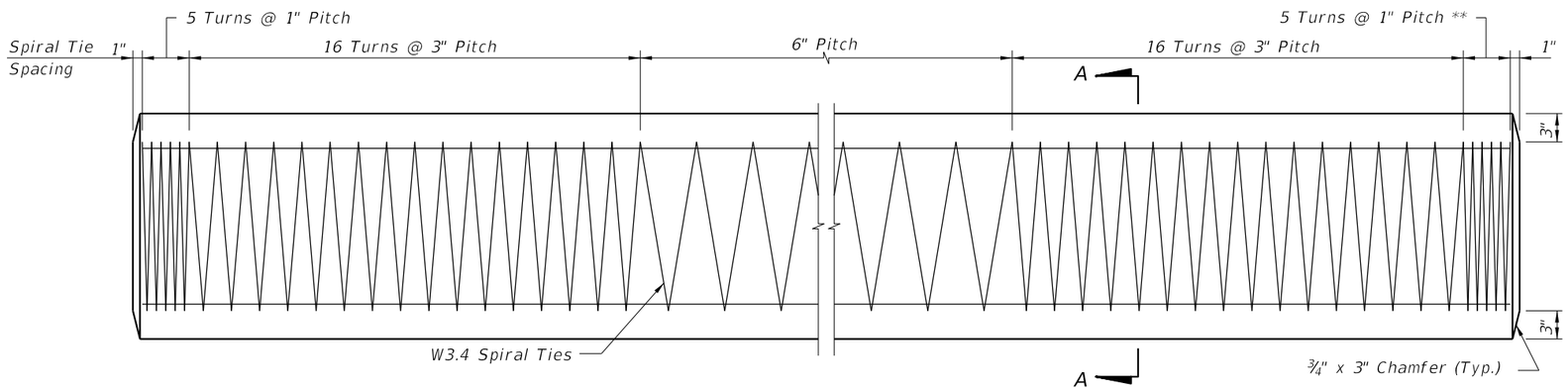

ELEVATION

** See Note No. 4 on Index No. 20601

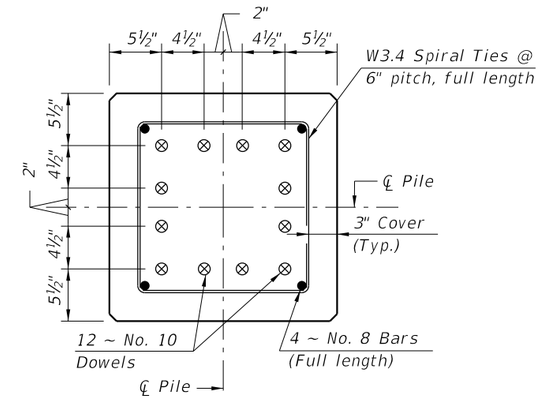

SECTION D-D

(See Nondrivable Unforeseen Reinforced Precast Pile Splice Detail)

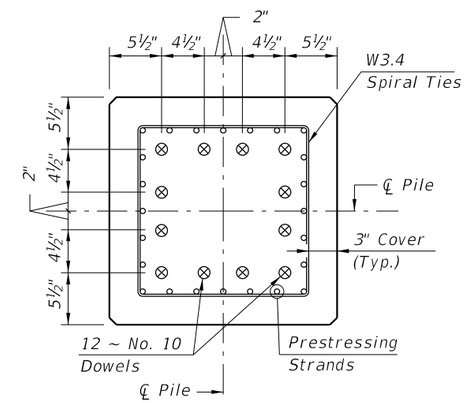

SECTION E-E

(See Drivable Prestressed Precast Pile Splice Detail)

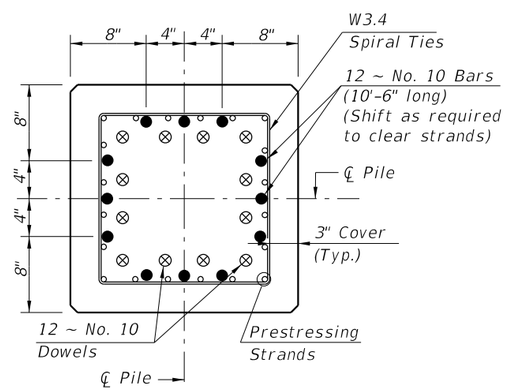

SECTION F-F

(See Drivable Preplanned Pile Splice Detail)

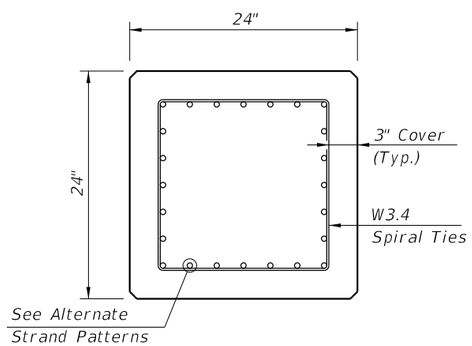

SECTION A-A

ALTERNATE STRAND PATTERNS

16 ~ 0.6" Ø, Grade 270 LRS, at 44 kips
20 ~ ½" Ø (Special), Grade 270 LRS, at 34 kips
24 ~ ½" Ø, Grade 270 LRS, at 31 kips

NOTES:

1. Work this Index with Index No. 20600 - Notes and Details for Square Prestressed Concrete Piles and Index No. 20601 - Square Prestressed Concrete Pile Splices.
2. Any of the given Alternate Strand Patterns may be utilized. The strands shall be located as follows:
   Place one strand at each corner and place the remaining strands equally spaced between the corner strands.
   The total strand pattern shall be concentric with the nominal concrete section of the pile.

LAST REVISION	REVISION	DESCRIPTION:			INDEX NO.	SHEET NO.
01/01/12			FDOT DESIGN STANDARDS FY 2012/2013	24" SQUARE PRESTRESSED CONCRETE PILE	20624	1

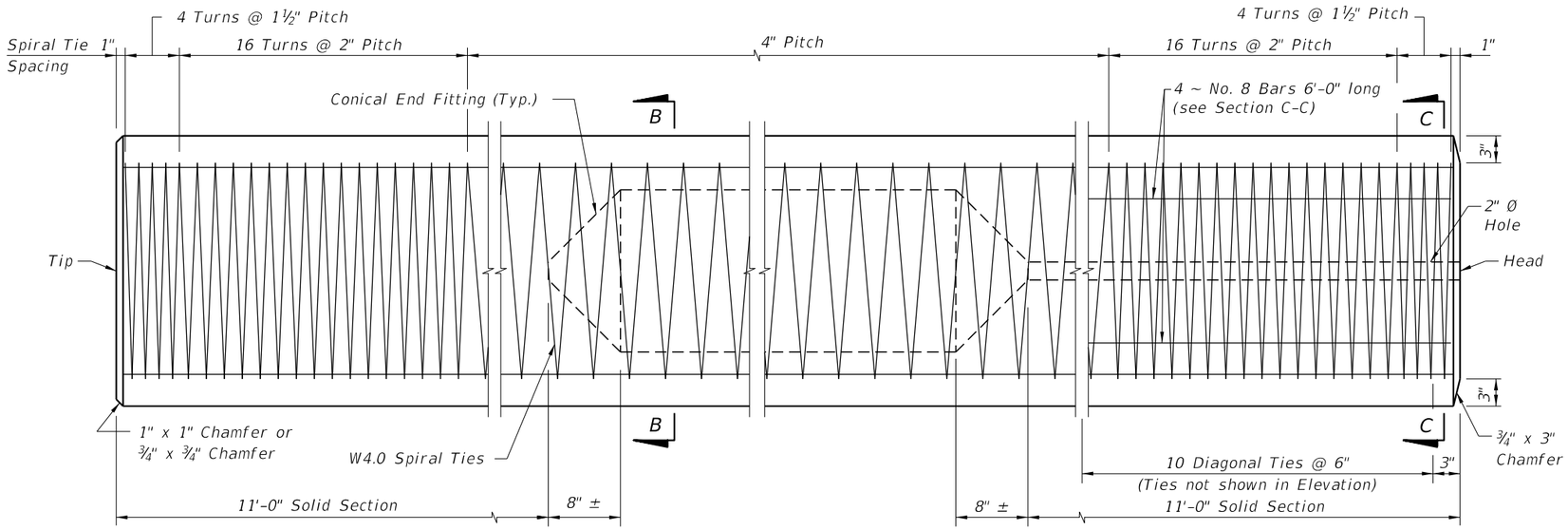

ELEVATION

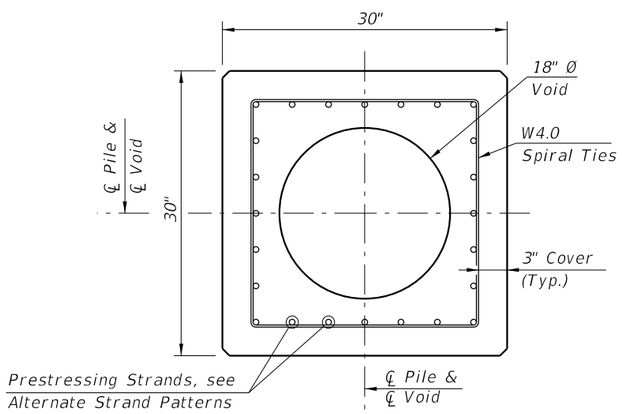

SECTION B-B
(See Pile Splice Reinforcement Details)

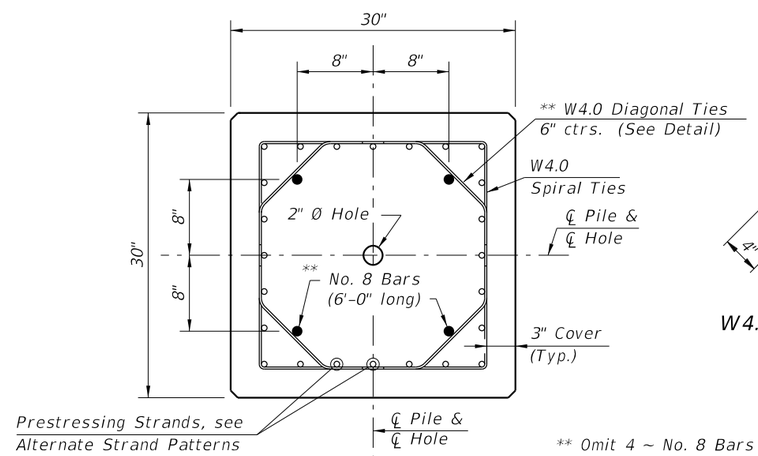

SECTION C-C
(See Pile Splice Reinforcement Details)

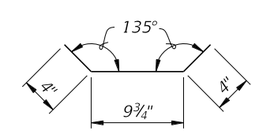

W4.0 DIAGONAL TIE DETAIL

** Omit 4 ~ No. 8 Bars and Diagonal Ties in pre-planned mechanical splice.

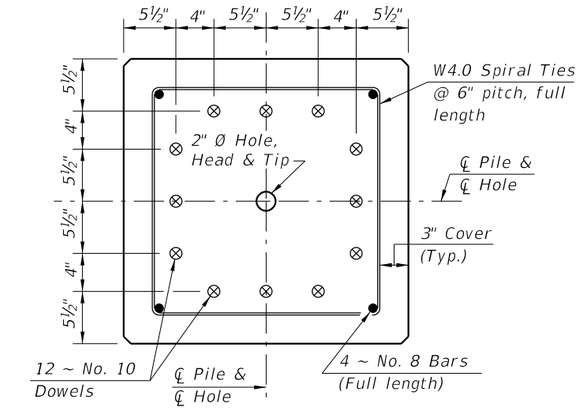

SECTION D-D
(See Nondrivable Unforeseen Reinforced Precast Pile Splice Detail)

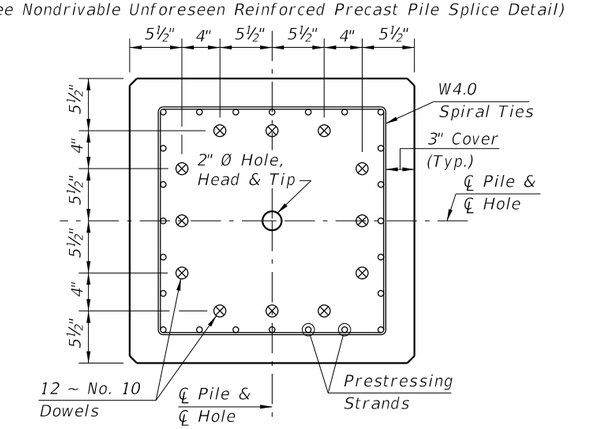

SECTION E-E
(See Drivable Prestressed Precast Pile Splice Detail)

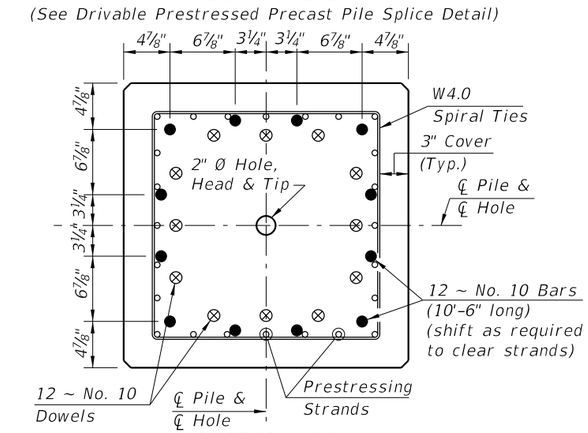

SECTION F-F
(See Drivable Preplanned Pile Splice Detail)

PILE SPLICE DETAILS

ALTERNATE STRAND PATTERNS

20 ~ 0.6" Ø, Grade 270 LRS, at 41 kips
24 ~ ½" Ø (Special), Grade 270 LRS, at 34 kips
28 ~ ½" Ø, Grade 270 LRS, at 29 kips

NOTES:
1. Venting shall be provided by the use of a 1" Ø PVC conduit through a substructure cap or column. Voids between segments of spliced piles shall be connected by 2" Ø hole(s).
2. Any of the given Alternate Strand Patterns may be utilized. The strands shall be located as follows: Place one strand at each corner and place the remaining strands equally spaced between the corner strands. The total strand pattern shall be concentric with the nominal concrete section of the pile.
3. CONTRACTOR OPTION: The 30" pile may be cast SOLID by omitting the 18" Ø void and the 2" Ø vent hole. In this event, the Contractor shall submit calculations for approval and a proposed strand configuration that provide net prestressing after losses equal to 1000 psi. Alternate configurations for the Diagonal Ties, to maintain the position of the 4 ~ No. 8 Bars, may be approved by the Engineer.
4. Work this Index with Index No. 20600 - Notes and Details for Square Prestressed Concrete Piles and Index No. 20601 - Square Prestressed Concrete Pile Splices.

LAST REVISION	REVISION	DESCRIPTION:			INDEX NO.	SHEET NO.
01/01/12			FDOT DESIGN STANDARDS FY 2012/2013	30" SQUARE PRESTRESSED CONCRETE PILE	20630	1

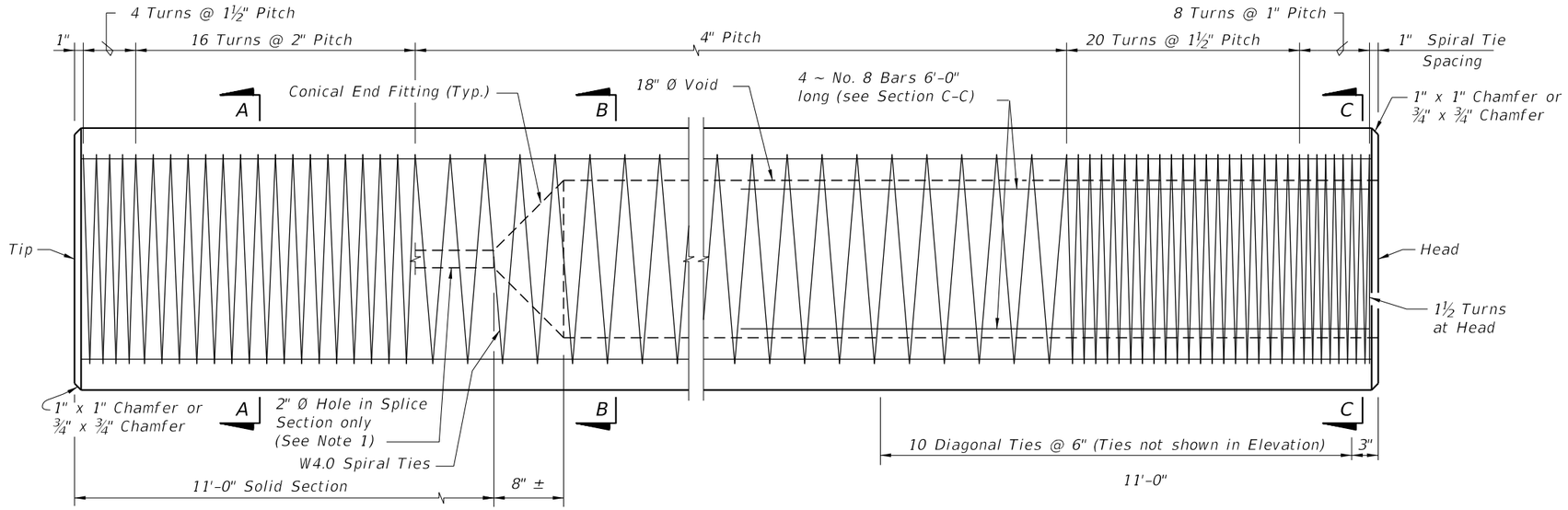

ELEVATION

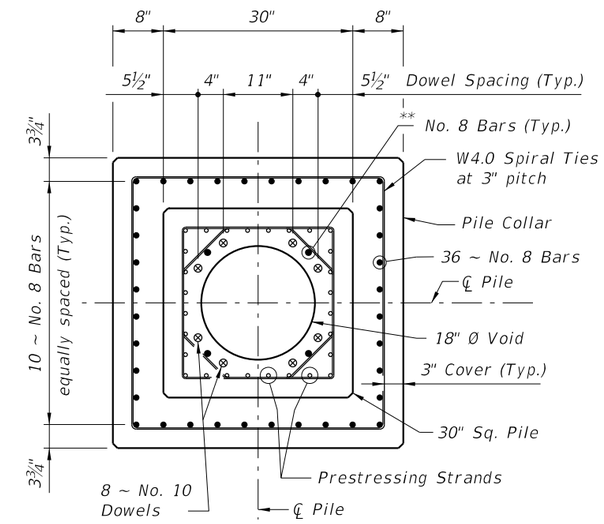

SECTION D-D
SECTION THRU PILE COLLAR

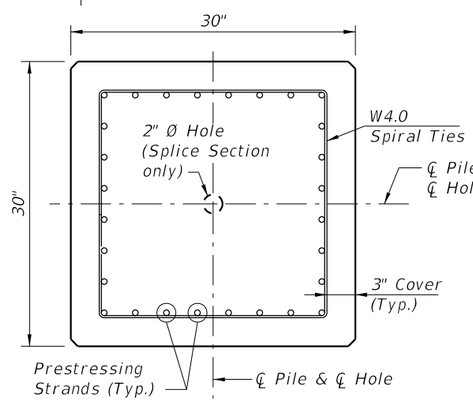

SECTION A-A

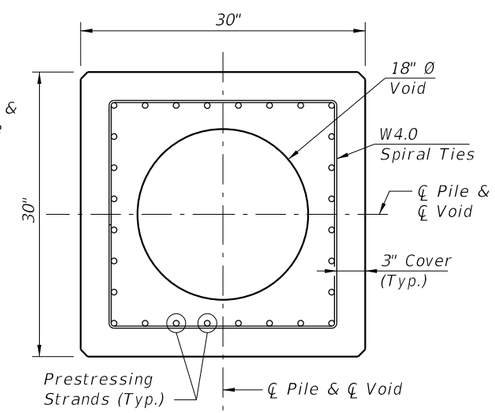

SECTION B-B

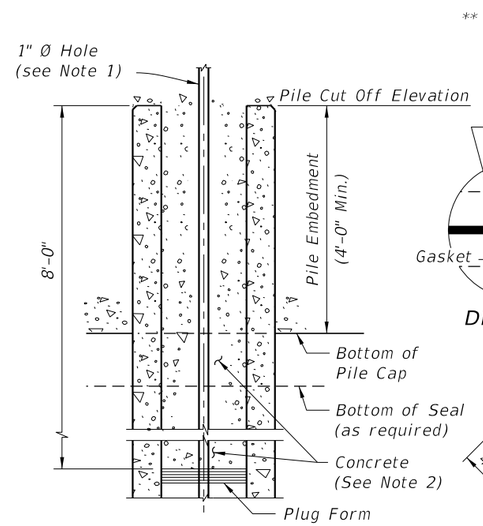

SECTION THROUGH PILE AT PILE CAP

** Omit 4 ~ No. 8 Bars and Diagonal Ties in pre-planned mechanical splice.

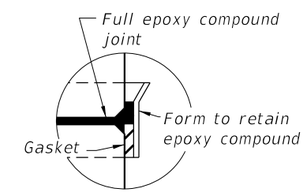

DETAIL A

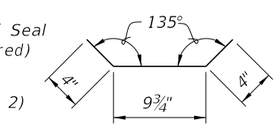

W4.0 DIAGONAL TIE DETAIL

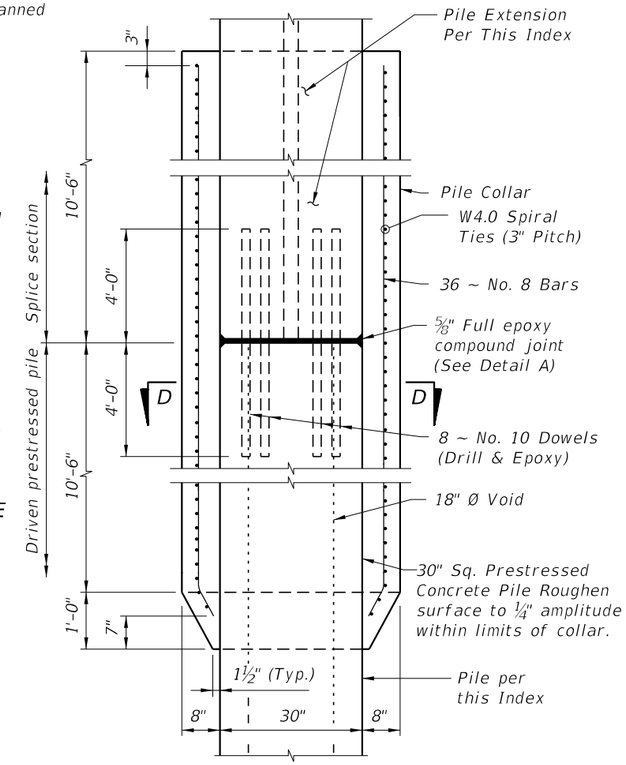

DETAIL OF PILE COLLAR FOR HIGH MOMENT CAPACITY 30" SQUARE PRESTRESSED PILE
-PILE SPLICE DETAIL-

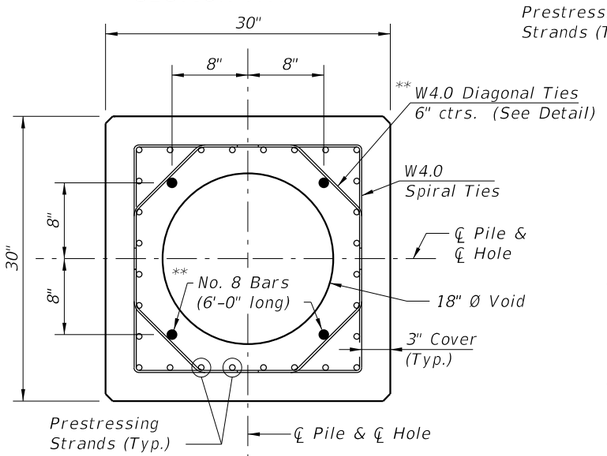

SECTION C-C

STRAND PATTERN

28 ~ 0.6" Ø, Grade 270 LRS, at 29.5 kips

NOTES:

1. Venting shall be provided by the use of a 1" Ø PVC conduit through a substructure cap or column. Voids between segments of spliced piles shall be connected by 2" Ø hole(s).
2. After the pile is driven and cut to grade, the top 8'-0" of the 18" Ø Void shall be filled with concrete. Prior to filling the top 8'-0" of the 18" Ø Void with concrete, strip the cardboard form material from the void. A stay-in-place corrugated thin wall galvanized pipe may be used to form the void in lieu of the cardboard form material. The concrete fill material shall be of the same type and strength as called for in the pile cap and paid for as substructure concrete.
3. Collar concrete shall reach a strength of 6,000 psi before pile driving is resumed.
4. Work this Index with Index No. 20600 - Notes and Details for Square Prestressed Concrete Piles.

LAST REVISION	REVISION	DESCRIPTION:			INDEX NO.	SHEET NO.
01/01/12			FDOT DESIGN STANDARDS FY 2012/2013	HIGH MOMENT CAPACITY 30" SQUARE PRESTRESSED CONCRETE PILE	20631	1

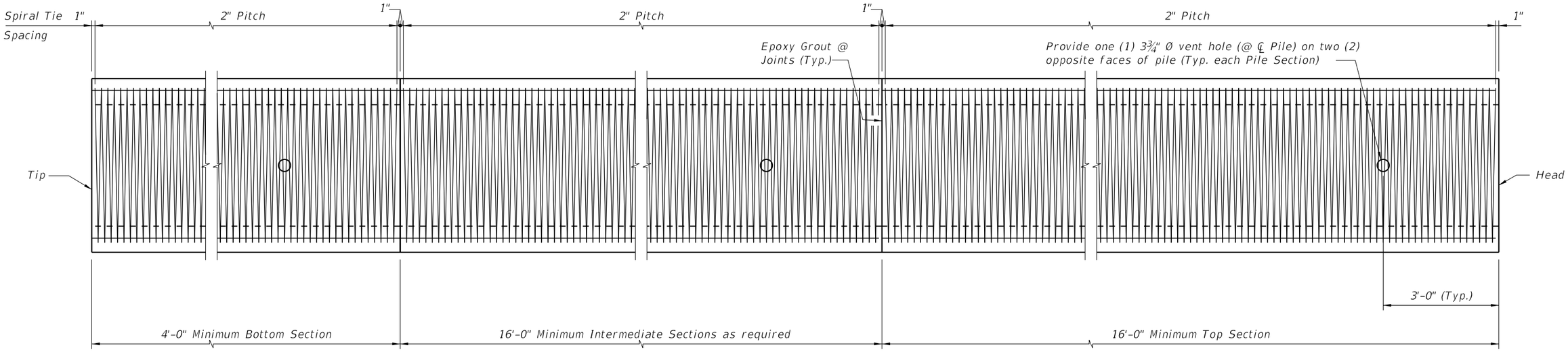

ELEVATION

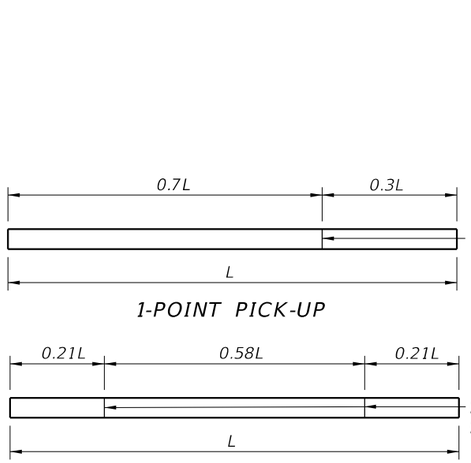

PILE PICK-UP DETAILS

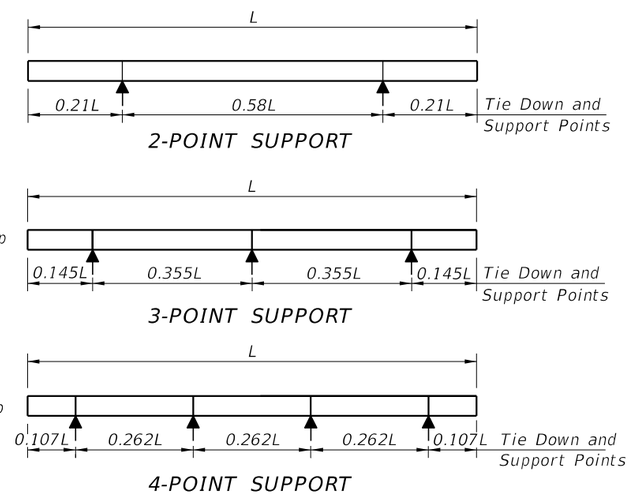

STORAGE AND TRANSPORTATION SUPPORT DETAILS

TABLE OF MAXIMUM PILE PICK-UP AND SUPPORT LENGTHS		
Maximum Pile Length (Feet)	Required Storage and Transportation Detail	Pick-Up Detail
119	2, 3, or 4 point	1 Point
170	2, 3, or 4 point	2 Point

NOTES

DESIGN SPECIFICATIONS:
Florida Department of Transportation (FDOT) "Structures Design Guidelines", Current Edition.
American Association of State Highway and Transportation Officials (AASHTO) "LRFD Bridge Design Specifications", Current Edition.

SPIRAL TIES:
One full wrap of spirals is required at both the head and tip of pile. One half turn required for spiral splices.

CONCRETE CLASS:
Concrete for all piles shall be Class V (Special). Concrete for pile splices shall be Class IV. See "GENERAL NOTES" in Structures Plans for any specific locations where the use of Silica Fume is required.

CONCRETE STRENGTH:
The cylinder strength shall be 6,000 psi minimum at time of transfer of the Prestressing Force.

SPLICE BONDING MATERIAL:
The material to form the joint between pile sections shall be a Type B Epoxy Compound in accordance with Section 926 of the Specifications. The bonding agent used on internal pile surfaces shall be a Type A Epoxy Compound in accordance with Section 926 of the Specifications. Epoxy Compounds used shall be contained on the Qualified Products List (QPL). Use Epoxy Bonding Compound or Epoxy Mortar as recommended by the Manufacturer. For Epoxy Mortar only use sand or other filler material supplied by the manufacturer and in the proportions recommended.

PICK-UP POINTS:
Piles shall be marked at the pick-up points to indicate proper points for attaching handling lines.

REINFORCING STEEL:
All reinforcing steel shall be Grade 60, except that smooth steel wire (W11 spiral ties and longitudinal spacers and W20 ties) shall be manufactured from cold drawn steel wire meeting the requirements of ASTM A82.

PRESTRESSING STEEL:
Prestressing tendons shall be made up of two seven-wire strands. Prestressing strands shall be ½" Ø (Special), Grade 270 low relaxation, at 33.8 kips.

PILE DRIVING AFTER SPLICING:
Pile splices shall reach a minimum strength of 5500 psi before driving is resumed.

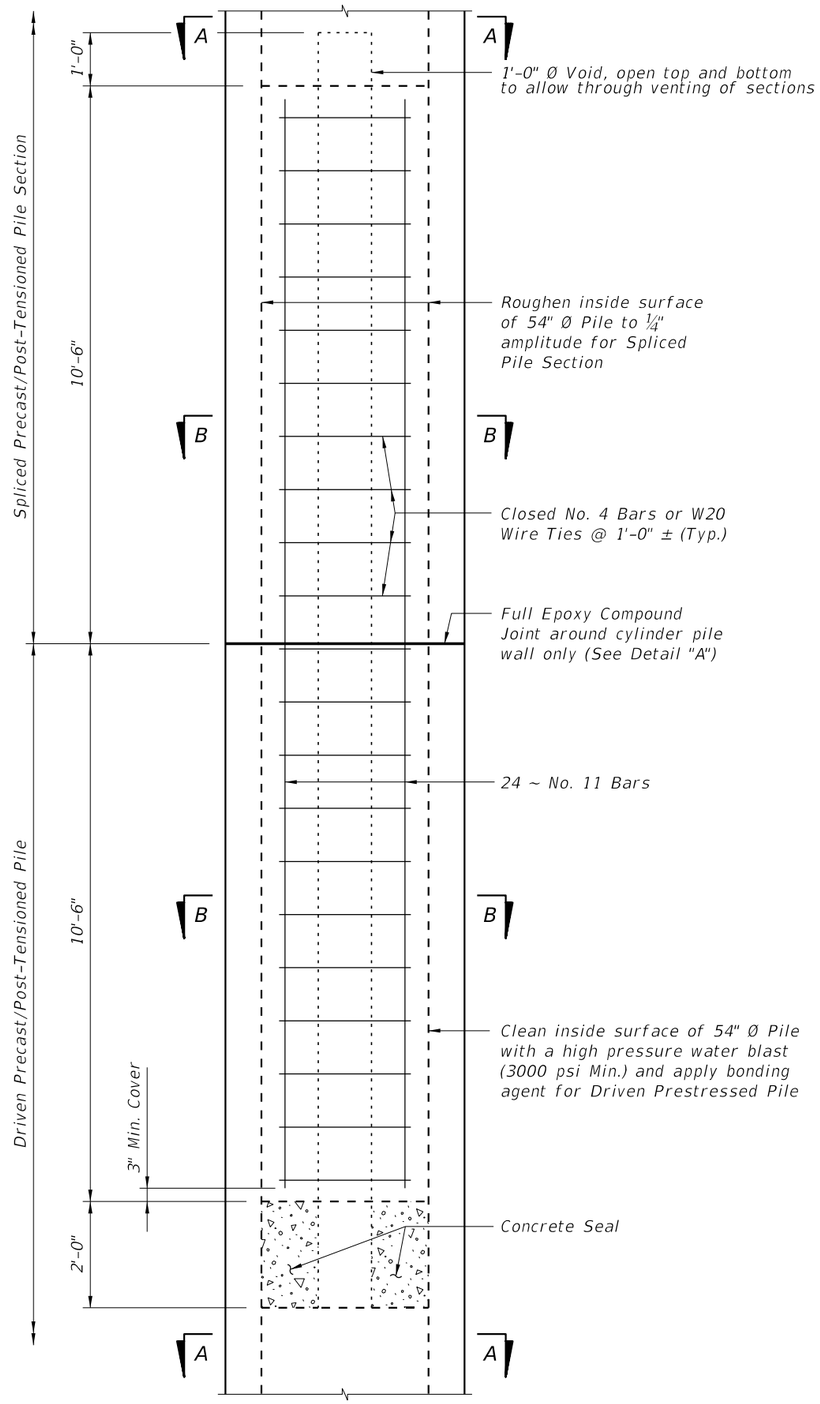

DRIVABLE UNFORESEEN FIELD SPLICE DETAIL
(Cast-In-Place Plug)

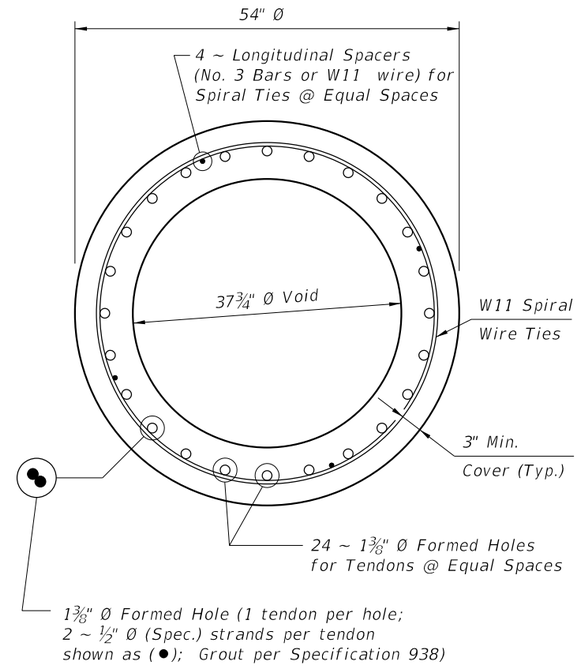

SECTION A-A

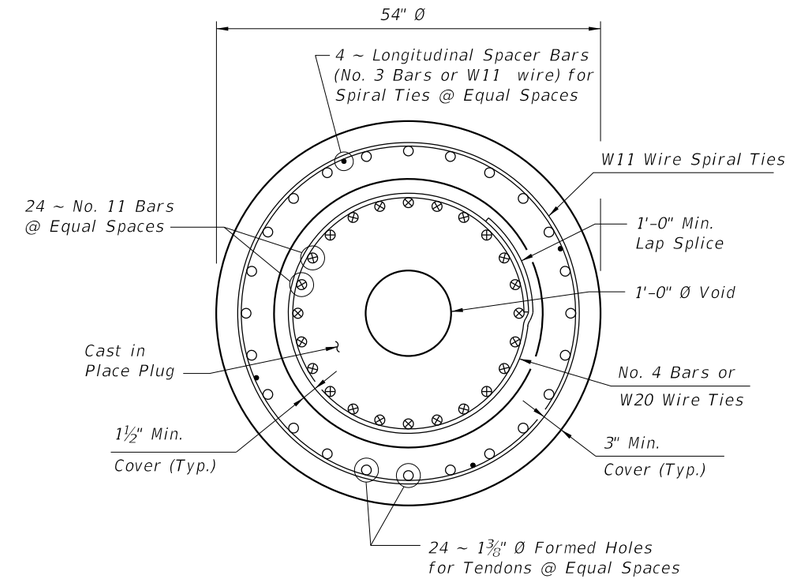

SECTION B-B

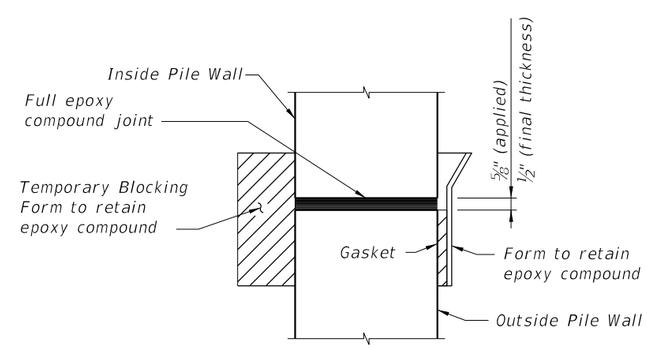

DETAIL "A"

LAST REVISION	REVISION	DESCRIPTION:				INDEX NO.	SHEET NO.
01/01/12			FDOT DESIGN STANDARDS FY 2012/2013	54" PRECAST/POST-TENSIONED CONCRETE CYLINDER PILE		20654	2

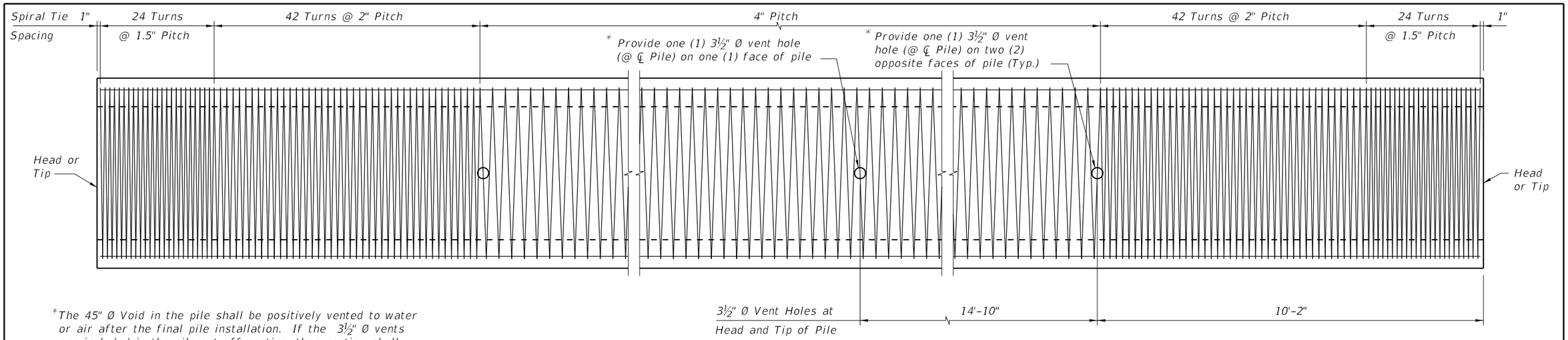

*The 45" Ø Void in the pile shall be positively vented to water or air after the final pile installation. If the 3½" Ø vents are included in the pile cut-off section, then venting shall be provided by the use of a 1" Ø PVC conduit through the substructure cap or column.

ELEVATION

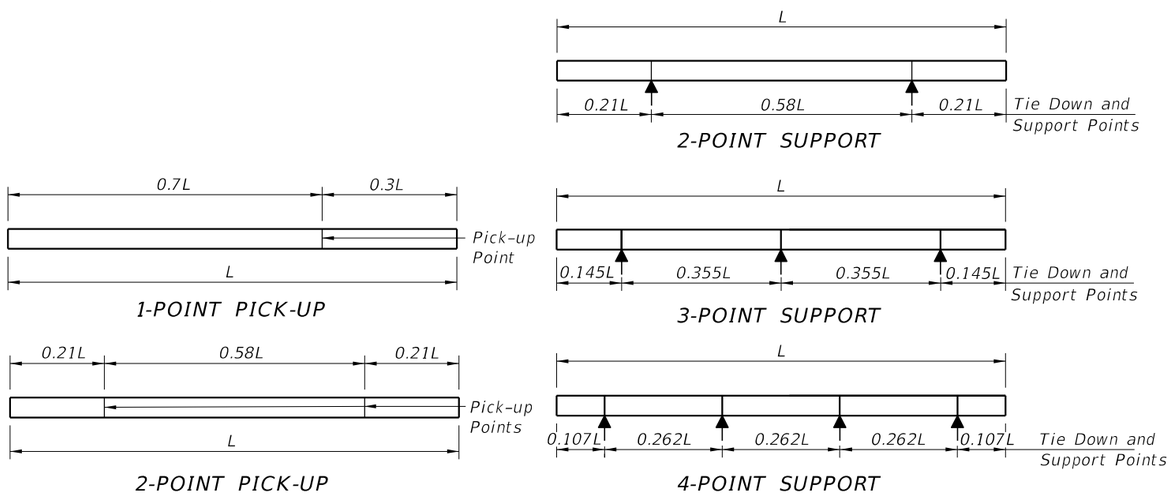

PILE PICK-UP DETAILS

STORAGE AND TRANSPORTATION SUPPORT DETAILS

TABLE OF MAXIMUM PILE PICK-UP AND SUPPORT LENGTHS		
Maximum Pile Length (Feet)	Required Storage and Transportation Detail	Pick-Up Detail
122	2, 3, or 4 point	1 Point
174	2, 3, or 4 point	2 Point

NOTES

DESIGN SPECIFICATIONS:
Florida Department of Transportation (FDOT) "Structures Design Guidelines", Current Edition.
American Association of State Highway and Transportation Officials (AASHTO) "LRFD Bridge Design Specifications", Current Edition.

SPIRAL TIES:
One full wrap of spirals is required at both the head and tip of pile. One half turn required for spiral splices.

CONCRETE CLASS:
Concrete for all piles shall be Class V (Special). Concrete for pile splices shall be Class IV. See "GENERAL NOTES" in Structures Plans for any specific locations where the use of Silica Fume is required.

CONCRETE STRENGTH:
The cylinder strength shall be 4,000 psi minimum at time of transfer of the Prestressing Force.

SPLICE BONDING MATERIAL:
The material to form the joint between pile sections shall be a Type B Epoxy Compound in accordance with Specification Section 926. The bonding agent used on internal pile surfaces shall be a Type A Epoxy Compound in accordance with Specification Section 926. Epoxy Compounds used shall be contained on the Qualified Products List (QPL). Use Epoxy Bonding Compound or Epoxy Mortar as recommended by the Manufacturer. For Epoxy Mortar only use sand or other filler material supplied by the manufacturer and in the proportions recommended.

PICK-UP POINTS:
Piles shall be marked at the pick-up points to indicate proper points for attaching handling lines.

REINFORCING STEEL:
All reinforcing steel shall be Grade 60, except that smooth steel wire (W11 spiral ties and W20 ties) shall be manufactured from cold drawn steel wire meeting the requirements of ASTM A82.

PRESTRESSING STEEL:
Prestressing steel shall be 0.6" Ø seven-wire strand, Grade 270 low relaxation, at 44.0 kips.

PILE DRIVING AFTER SPLICING:
Pile splices shall reach a minimum strength of 5500 psi before driving is resumed.

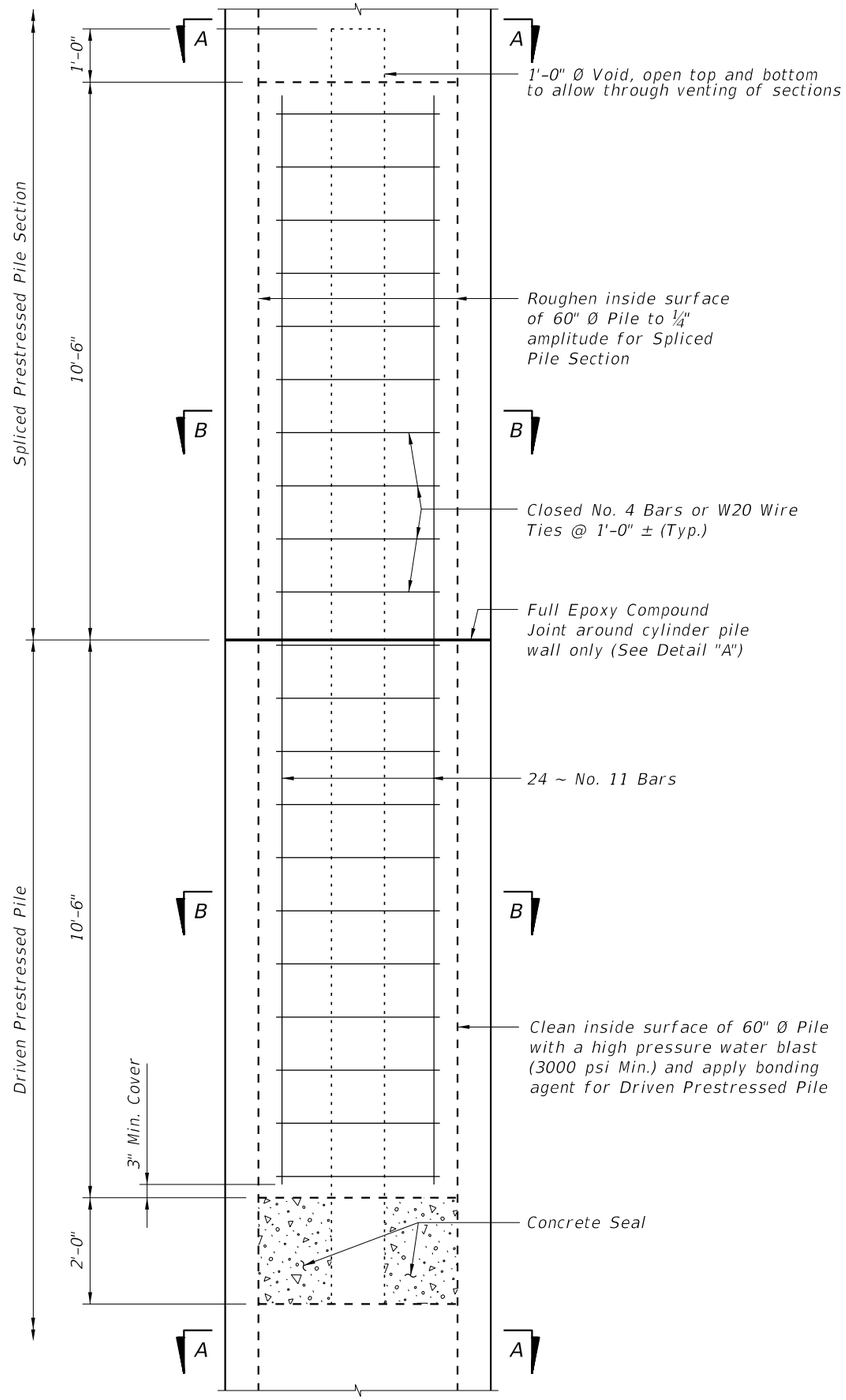

DRIVABLE UNFORESEEN FIELD SPLICE DETAIL
(Cast in Place Plug)

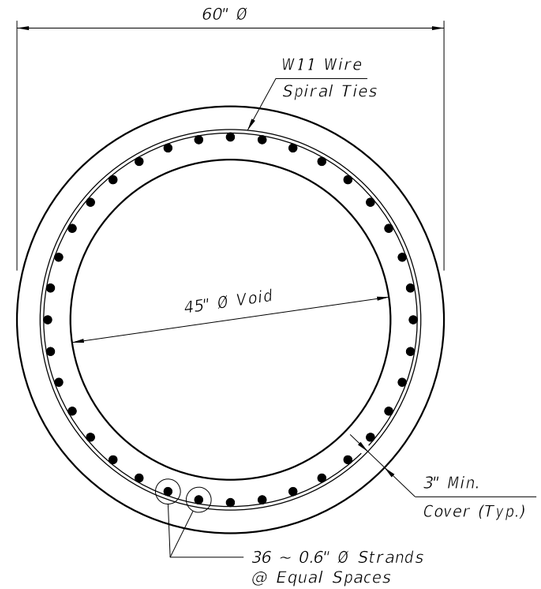

SECTION A-A

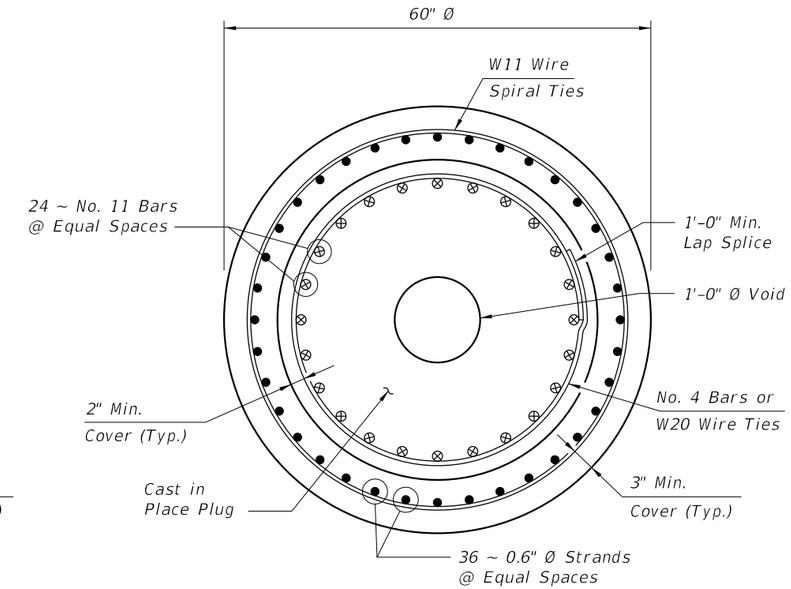

SECTION B-B

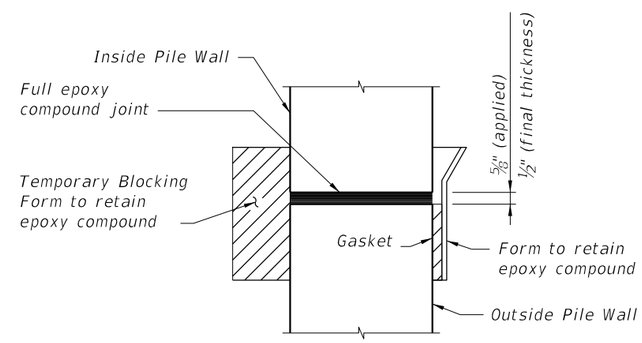

DETAIL "A"