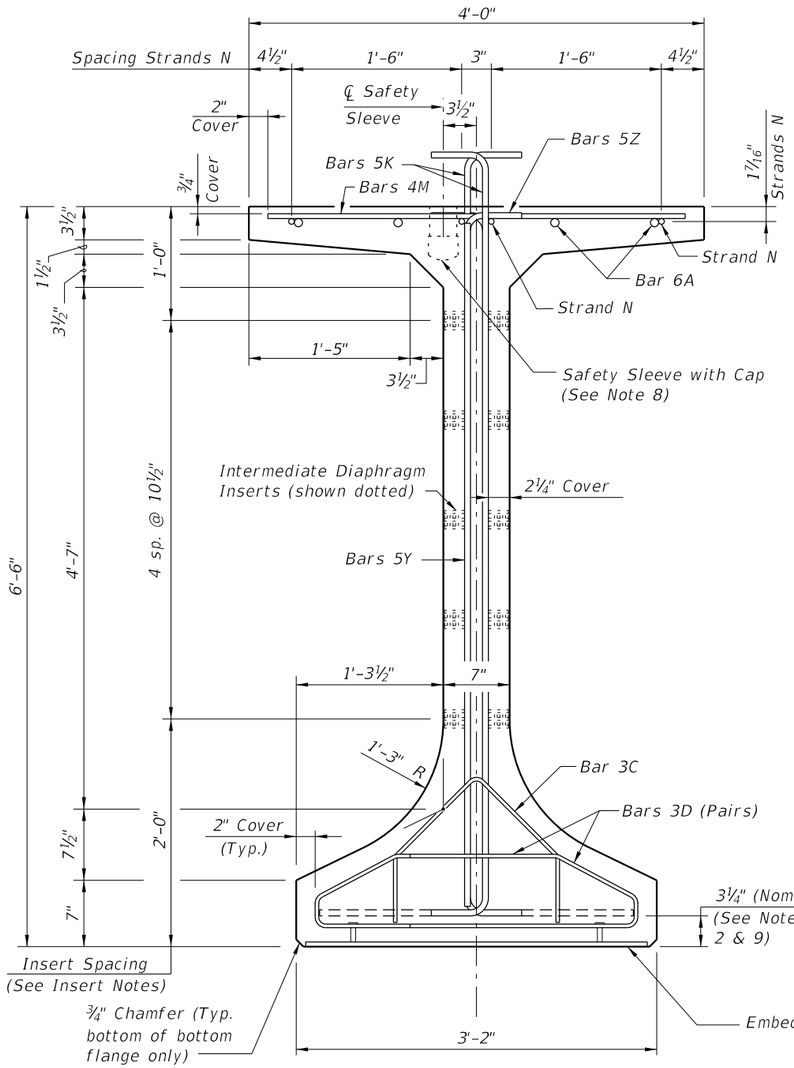

END VIEW

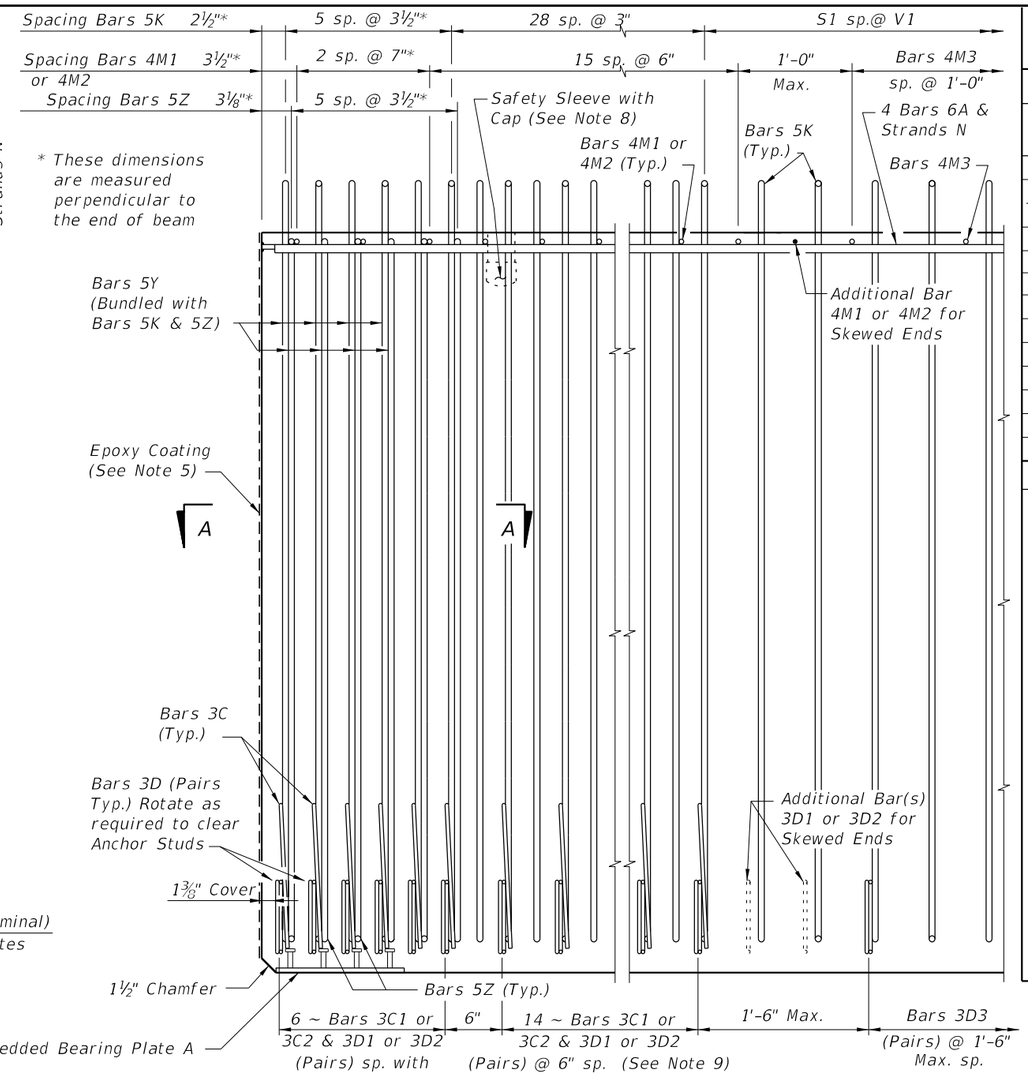

ELEVATION AT END OF BEAM
(Flanges Not Shown For Clarity)
(End 1 Shown, End 2 Similar)

CONVENTIONAL REINFORCING BAR BENDING DETAILS

BILL OF REINFORCING STEEL

MARK	NOTE NUMBERS	SIZE	NUMBER REQUIRED	LENGTH (NOTE 1)
A	—	6	8	28'-0"
C1	9, 10 & 11	3	20 (End 1)	Varies
C2	9, 10 & 11	3	20 (End 2)	Varies
D1	9, 10, 11 & 14	3	40 (End 1)	Varies
D2	9, 10, 11 & 14	3	40 (End 2)	Varies
D3	9 & 14	3	See Table	4'-3"
K	2, 9, 11 & 13	5	See Table	7'-8"
M1	9 & 10	4	18 (End 1)	Varies
M2	9 & 10	4	18 (End 2)	Varies
M3	9	4	See Table	3'-8"
N	3 & 4	⅜" Ø Strand	4	Dim. L
Y	9 & 11	5	16	6'-0"
Z	2, 9, 11 & 13	5	12	7'-2"

BENDING DIAGRAMS (See Note 1)

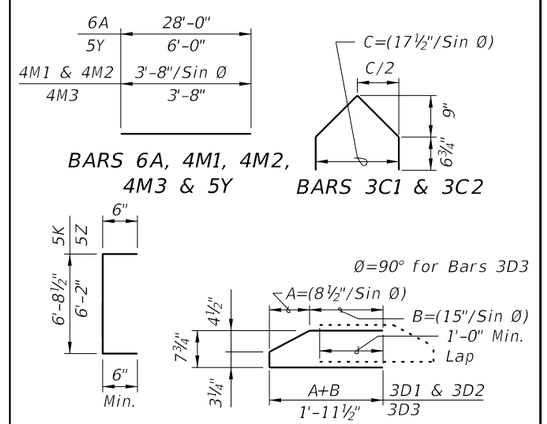

NOTES:

A. Work this Index with Index No. 20010 - Typical Florida-I Beam Details and Notes and the Florida-I Beam - Table of Beam Variables in Structures Plans.

B. For referenced notes, see Index No. 20010.

C. For Dimensions A, B, C, D, L, R & V1 and number of spaces S1 thru S4, see Florida-I Beam - Table of Beam Variables in Structures Plans.

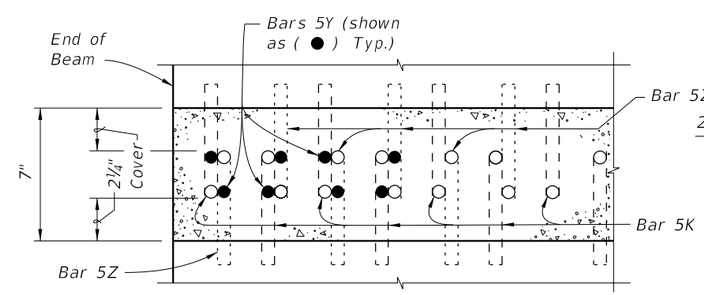

SECTION A-A FOR CONVENTIONAL REINFORCING
(Showing Bars 5K, 5Y & 5Z Only)

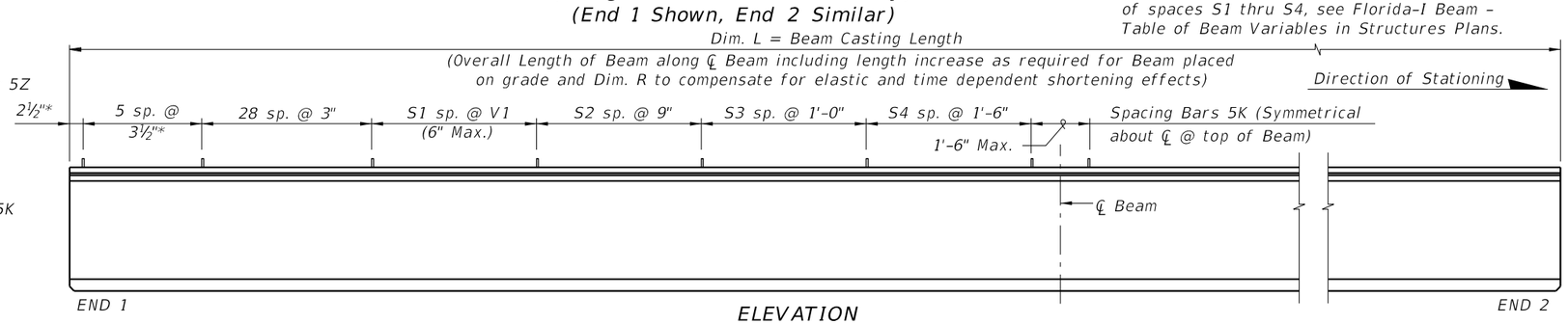

ELEVATION

LAST REVISION	REVISION	DESCRIPTION:			INDEX NO.	SHEET NO.
01/01/12			FDOT DESIGN STANDARDS FY 2012/2013	FLORIDA-I 78 BEAM - STANDARD DETAILS	20078	1

12/30/2011 11:50:26 AM rd960rh C:\d\projects\standards\structures\current\readyrelease\2012book_draft\20078-1of2.dgn

ALTERNATE REINFORCING STEEL (WELDED WIRE REINFORCEMENT) DETAILS

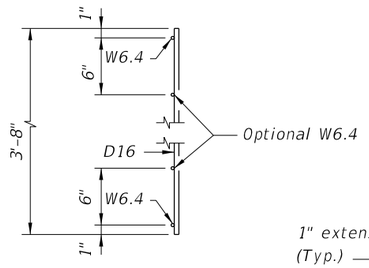

PIECES M
END VIEW

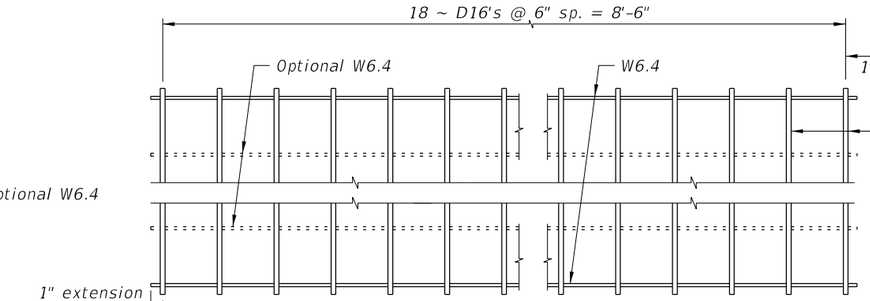

PLAN VIEW
PIECE M-1
(2 Required)

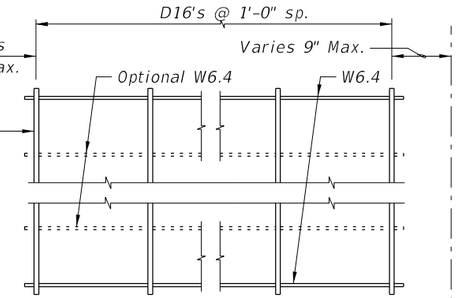

PLAN VIEW
PIECE M-3
(2 Required)

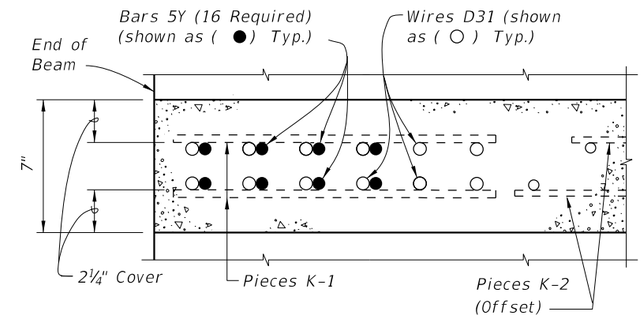

SECTION A-A
FOR WELDED WIRE REINFORCEMENT

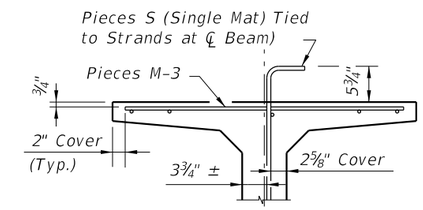

PARTIAL SECTION AT CENTER BEAM

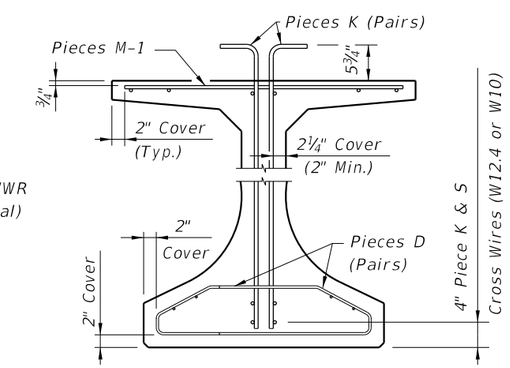

PARTIAL BEAM END VIEW
(Conventional Reinforcing Bars A, C, Y
and Strands N not Shown for Clarity)

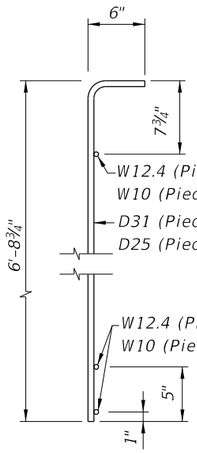

PIECES K & S
END VIEW

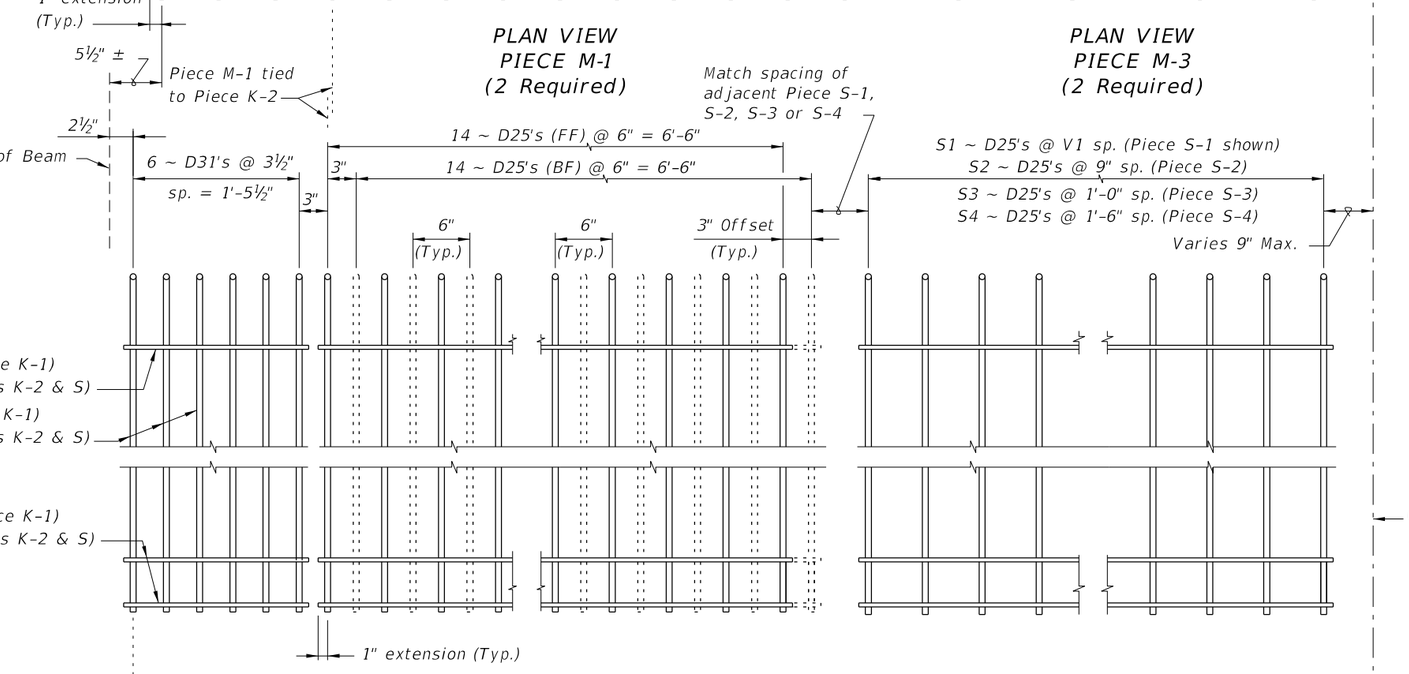

PIECE K-1
(Aligned EF)
(4 Required
~ 2 Pairs)

PIECE K-2
(FF Shown Solid, BF Shown Dashed)
(4 Required)

PIECE S-1, S-2, S-3 or S-4
(2 Required ~ Each Piece)

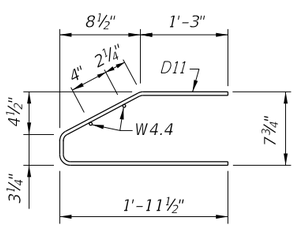

PIECES D
END VIEW

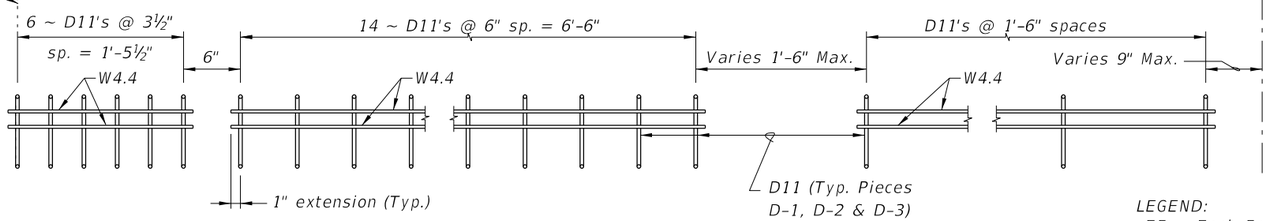

PIECE D-1
(4 Required ~ 2 Pairs)

PIECE D-2
(4 Required ~ 2 Pairs)

PIECE D-3
(4 Required ~ 2 Pairs)

LEGEND:
EF = Each Face
FF = Front Face
BF = Back Face

NOTES:

a. See Sheet 1 for placement details & Table of Beam Variables in Structures Plans for variables S1, S2, S3, S4 & V1.
b. Place Conventional Reinforcement Bars 6A & 3C as shown on Sheet 1. Place additional Bars 5Y as shown in Section A-A for Welded Wire Reinforcement. Bars 5Z will not be used with the WWR Option.
c. Pieces may be fabricated in multiple length sections.
d. For beams with skewed end conditions, Pieces D-1, D-2 & M-1 shall not be used; Conventional Reinforcement Bars D1, D2, C1, C2, M1 & M2 shall be used. See Index No. 20010 Skew Details and Note 9 for placement details. Shift Pieces K & Bars 5Y to accommodate skewed end conditions and align with Bars C and D.