REINFORCING STEEL BENDING DIAGRAMS

BILL OF REINFORCING STEEL		
MARK	SIZE	LENGTH
A (8'-0" SW)	5	6'-1"
A (14'-0" SW)	5	8'-1"
B	5	AS REQD.
T	5	4'-3"
V	5	3'-10"
DOWEL	1" Ø Smooth Bar	2'-0"

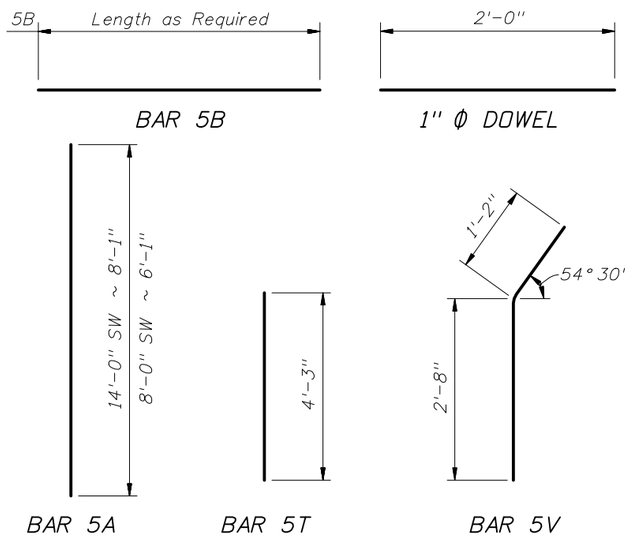

REINFORCING STEEL NOTES:

1. All bar dimensions in the bending diagrams are out to out.
2. All reinforcing steel at the open joints will have a 2" minimum cover.
3. Lap splices for Bars 5B will be a minimum of 2'-2".
4. Lap splices Bars 5T and 5V with 5U1 will be a minimum of 2'-2".
5. The Contractor may use Welded Wire Fabric when approved by the Engineer. Welded Wire Fabric will conform to ASTM A 497.

NOTES

1. CONSTRUCTION REQUIREMENTS: Construct the Trench Footing and expansion joints plumb; do not construct the Trench Footing perpendicular to the roadway surface. Slip forming is not permitted.
2. CONCRETE: Use Class II concrete for slightly aggressive environments. Use Class VI concrete for moderately or extremely aggressive environments. Concrete will be in accordance with Specification Section 346.
3. REINFORCING STEEL: Provide Grade 60 reinforcing steel in accordance with Specification Section 931. Dowel Load Transfer Devices will be ASTM A 36 smooth round bar and hot-dip galvanized in accordance with Specification Section 962. Install Dowel Load Transfer Devices in accordance with Specification Section 350.
4. Construct ¾" Expansion Joints plumb and perpendicular or radial to Gutter Line. Provide at 90'-0" maximum intervals as shown.
5. Provide and install Preformed Expansion Joint Filler in accordance with Specification Section 932.
6. Construct ½" V-Grooves plumb and provide at 30'-0" maximum intervals as shown. Space V-Grooves equally between ¾" Expansion Joints and/or Begin or End Trench Footing. V-Groove locations are to coincide with V-Groove locations in the Railing/Sound Barrier.
7. FILL REQUIREMENTS: Fill is required a distance of 4'-0" on both sides for the entire depth of the trench footing. See Typical Section for details.
8. Match Cross Slope of Travel Lane or Shoulder.
9. Spacing shown is along the Gutter Line.
10. Work this Standard Drawing with one or both of the following:
    a. Index No. 5210 - Traffic Railing/Sound Barrier (8'-0").
    b. Index No. 5211 - Traffic Railing/Sound Barrier (14'-0").

LEGEND: SW = Traffic Railing Barrier/Soundwall

ESTIMATED TRENCH FOOTING QUANTITIES			
ITEM	UNIT	QUANTITY	
		8'-0" SW	14'-0" SW
Concrete (Footing)	CY/FT	0.336	0.439
Reinforcing Steel (Typical)	LB/FT	56.84	69.36
Additional Reinf. @ Expansion Joint	LB	32.04	42.72

(Subtract 12.69 lb/ft from typical reinforcing steel quantity shown on Index No. 5210 to account for the absence of Stirrup Bars 5V and 5S1 in Trench Footings.)

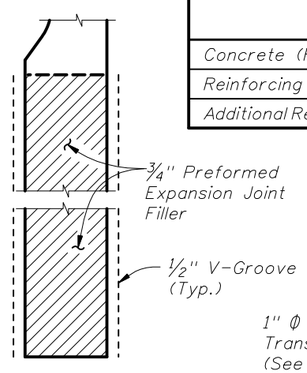

DETAIL "A"

(Showing Locations of ½" V-Grooves and ¾" Preformed Expansion Joint Filler)

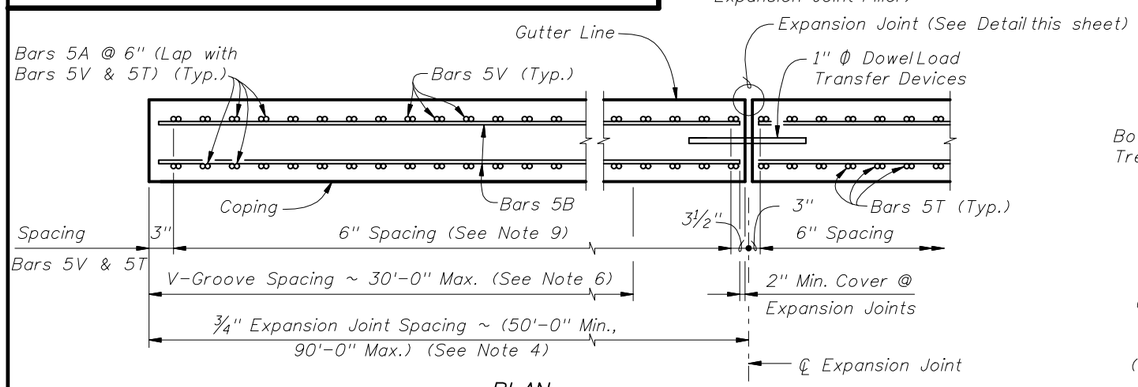

PLAN

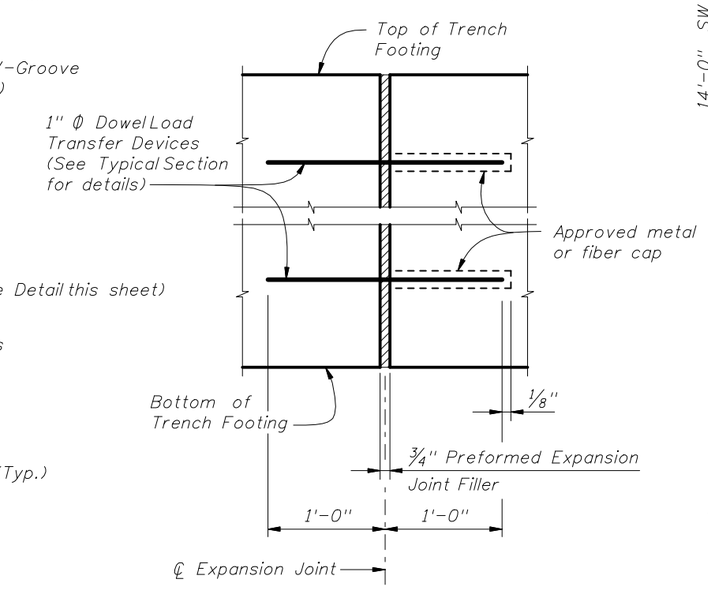

EXPANSION JOINT DETAIL

(Trench Footing expansion joints are required at ¾" open joints in Traffic Railing/Sound Barrier)

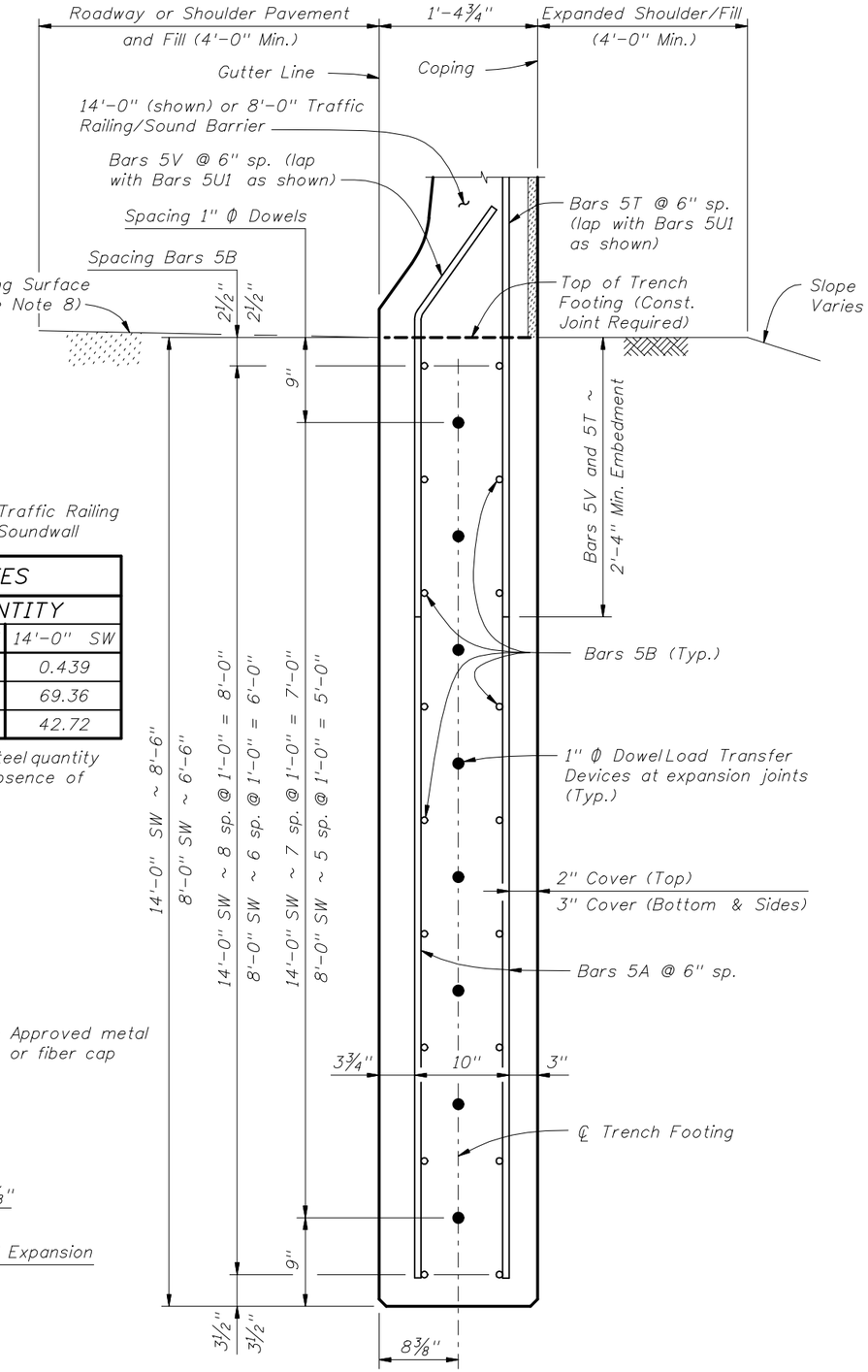

TYPICAL SECTION THRU TRENCH FOOTING
(Bars 5P, 5R and 5S1 in Traffic Railing Barrier/Soundwall not shown for clarity)

2010 FDOT Design Standards

TRAFFIC RAILING/SOUND BARRIER TRENCH FOOTING

Last Revision	Sheet No.
07/01/05	1 of 1

Index No. 5215