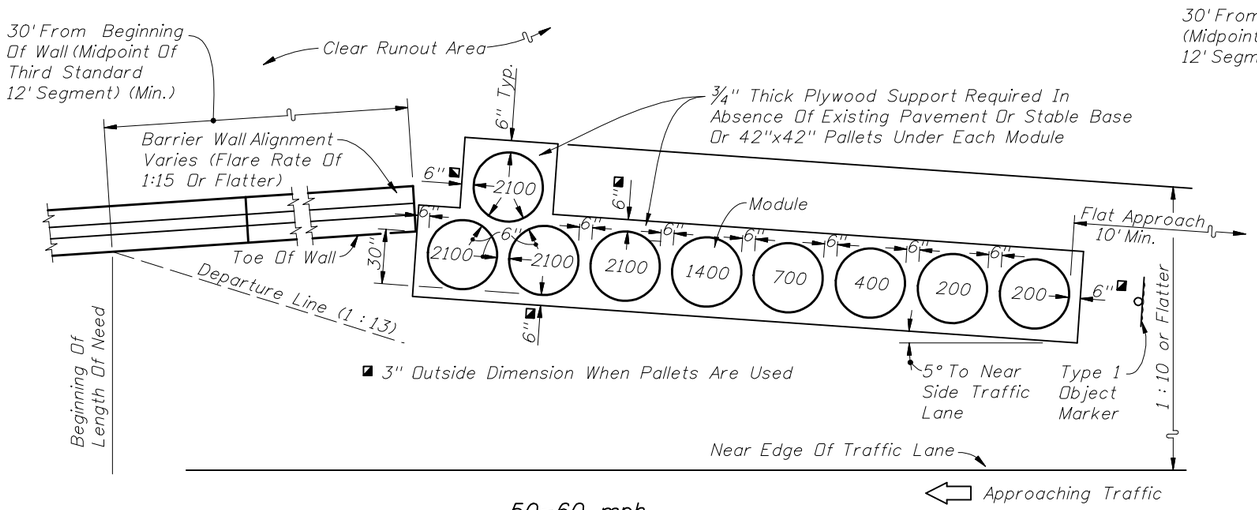

50-60 mph
PLAN

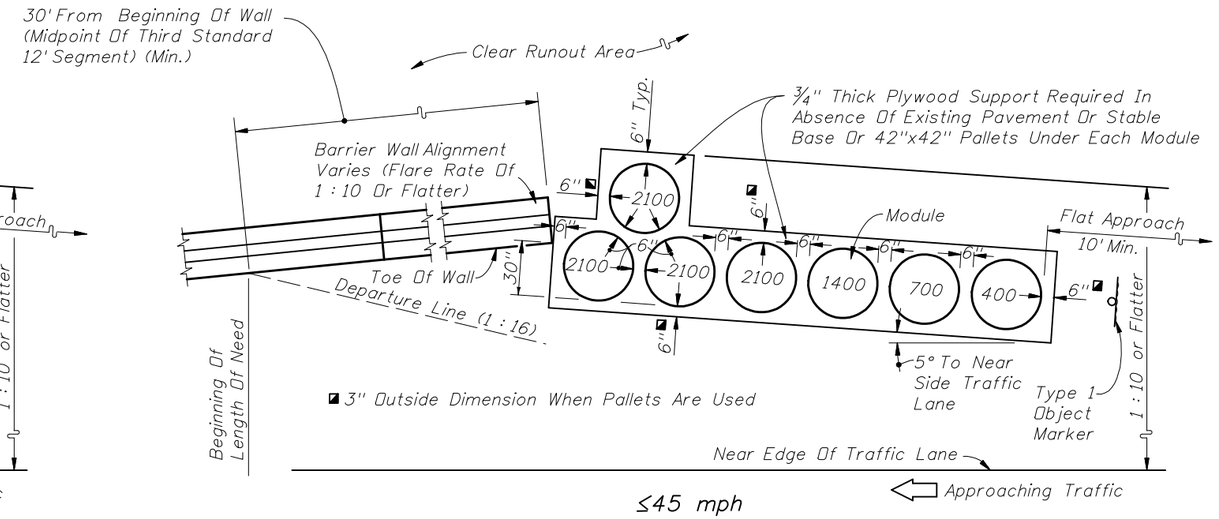

≤45 mph
PLAN

Note: Numbers shown inside modules indicate mass in pounds of sand. All modules are approximately 3' in diameter with heights ranging from 3' to 3'-9".

INERTIAL CRASH CUSHION ARRAYS

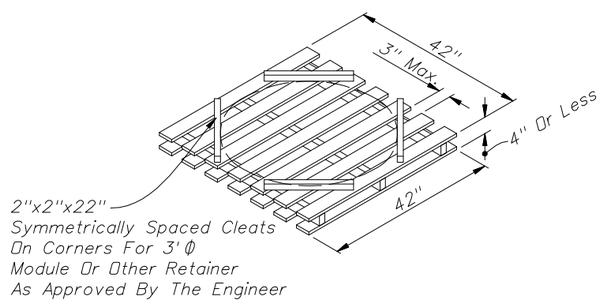

Pallet Shall Be Constructed Of Wood Or Other Frangible Or Resilient Materials Other Than Metals, And, Shall Be Sufficiently Durable To Support Modules For Their Expected Period Of Use; Wood Pallet Detail Shown.

INERTIAL MODULE PALLET

NOTES FOR TEMPORARY GATING CRASH CUSHIONS

1. The crash cushion arrays shown on this Index can be used on the State Highway System only when all of the following conditions are met:
   (a) Use is limited to shielding temporary concrete barrier wall approach ends.
   (b) Used only when a temporary gating crash cushion or inertial crash cushion is specifically called for in the plans.
   (c) Use is limited to installations that will not exceed 30 calendar days in duration, unless otherwise called for in the plans.

   When the plans do not specifically call for a temporary gating crash cushion, and/or when the installation will exceed 30 days in duration, a redirective crash cushion system in accordance with Index No. 415 is required.

2. Inertial crash cushions are gating type crash cushions, and a clear runout area back of the array must be provided. The arrays shown can be used for outer roadway applications, exclusive of gore areas, and for median applications where the median width is sufficient to provide clear zone width between the back side module and the near lane of the opposing traffic.

3. Inertial crash cushion modules shall be installed in accordance with the manufacturer's specifications and recommendations, and can be constructed of either new or functionally sound used modules.

4. Anchorage of barrier wall end segment is not required.

5. A yellow post mounted Type I Object Marker shall be centered 3' in front of the nose of all crash cushion arrays. Mounting hardware shall be in accordance with Index Nos. 11860 and 11865. The cost of the Object Marker shall be included in the cost of the crash cushion.

6. Temporary gating crash cushion systems listed on the Department's Qualified Products List (QPL) may be substituted for the crash cushion arrays shown in this Index, provided a configuration using the system for this substitution has been detailed in the approved QPL drawings. Manufacturers seeking approval of temporary gating crash cushions for inclusion on the QPL must submit application along with design documentation showing the crash cushion system is crash tested to NCHRP Report 350 Test Level 3 criteria, is accepted by FHWA and is compatible with FDOT temporary barrier wall systems. System approvals will be contingent on FDOT's evaluation of crash test performance results for consistency with FDOT temporary barrier wall end shielding applications and uses. If approved, installation drawings signed and sealed by a professional engineer licensed in the State of Florida will be required.

7. Temporary crash cushions (gating) are to be paid for, per array, under the contract unit price for Vehicular Impact Attenuator/Crash Cushion (Gating) (Temporary), LO.

TEMPORARY INERTIAL CRASH CUSHIONS FOR SHIELDING ENDS OF TEMPORARY CONCRETE BARRIER WALL