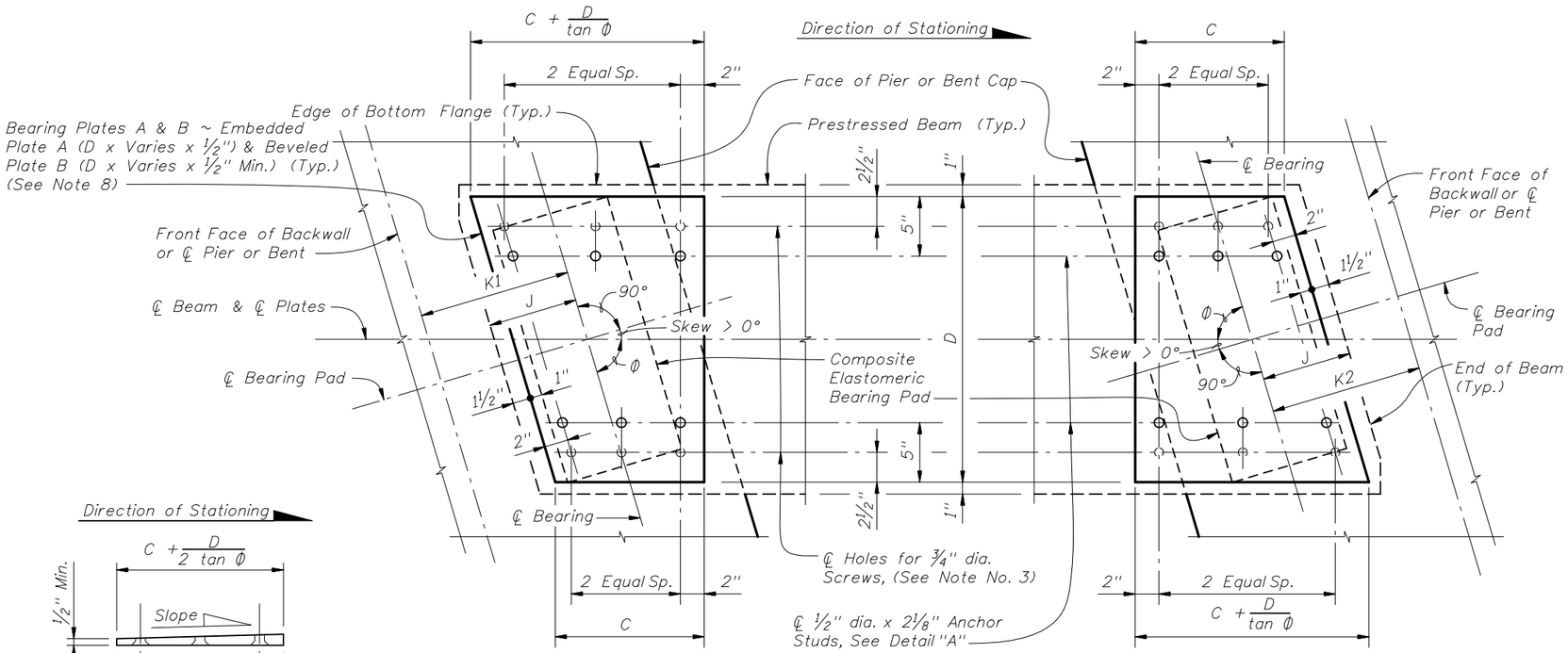

PLAN
(0° < Skew ≤ 30° shown, Skew = 0° Similar)

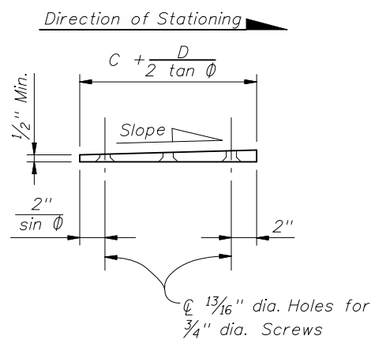

BEVELED BEARING PLATE B
(Along ℄ Beam)
(Positive Slope, Begin Bearing shown; Negative Slope, End Bearing similar)

NOTES:

1. Work this sheet with the following drawings: Index No. 20500 - Composite Elastomeric Bearing Pads.

2. Embedded Bearing Plates A are required for all AASHTO Type V, VI and Florida Bulb-T beams. Beveled Bearing Plates B with Embedded Bearing Plates A are required for beams only as scheduled in the 'TABLE OF BEAM VARIABLES' on Beam Sheets.

3. Hot-dip galvanized Bearing Plates A & B after fabrication except that Galvanized Caps may be welded in place after hot-dip galvanizing. Drill Bearing Plates A and B as an assembled unit, thread Bearing Plate A only. Holes are not required in Plate A when Plate B is not required. Drill and thread holes perpendicular to the bottom of Plate B and prior to plates being galvanized (ASTM A 123).

4. Provide Electro-plated, Countersunk Flat Head Machine Screws in accordance with ASTM A 449, Type 1. Provide screws long enough to maintain a 3/4" minimum embedment into Embedded Bearing Plate A and Galvanized Cap. Provide steel Galvanized Caps with 1/2" min. to 1 1/2" max. height and nominal 1" inside diameter.

5. Include the cost of Beveled Bearing Plates in the pay item for Prestressed Concrete Beams.

6. For Dimensions C and D, see 'BEARING PLATE DIMENSIONS' on Index No. 20500 and the 'BEVELED BEARING PLATE DATA TABLE' in the Structures Plans. For Dimensions J, K1 and K2, see 'TABLE OF BEAM VARIABLES' on Beam Sheets.

7. All details and dimensions shown are along ℄ Beam, except for dimensions to 3/4" dia. Screws and 1/2" dia. x 2 1/8" Anchor Studs, which are along ℄ Screws or ℄ Anchor Studs. Positive Slope shown, Negative Slope similar.

8. When Skew = 0°, dimensions for Embedded Bearing Plate A are D x C x 1/2" and for Beveled Plate B are D x C x 1/2" Min.

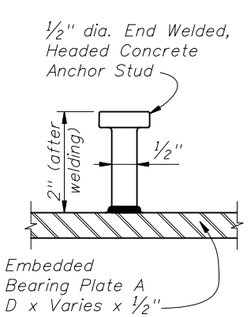

DETAIL "A"

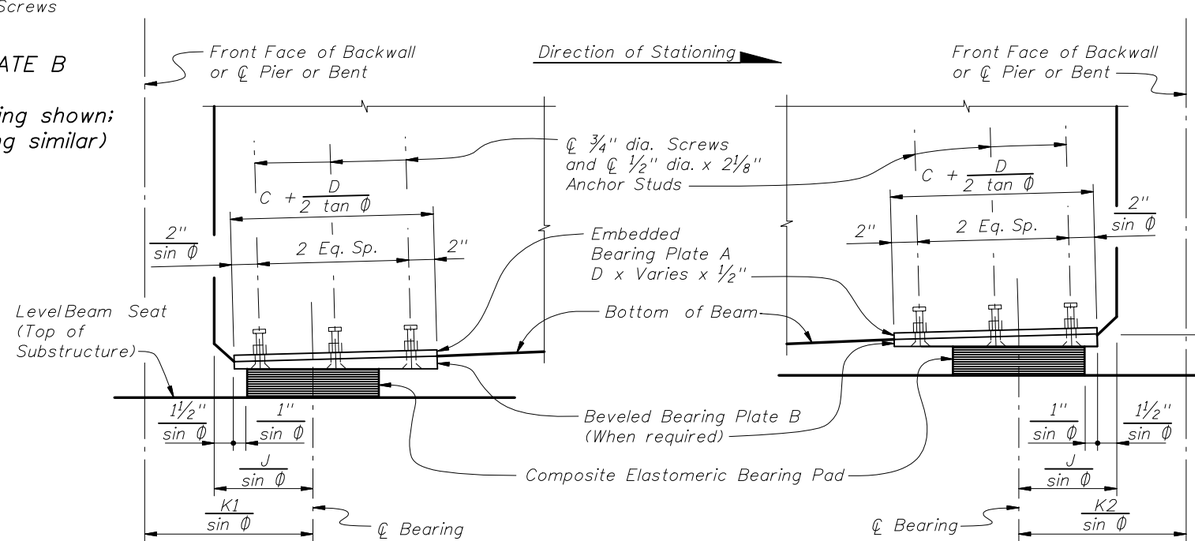

SIDE ELEVATION
(Along ℄ Beam) (See Note 7)

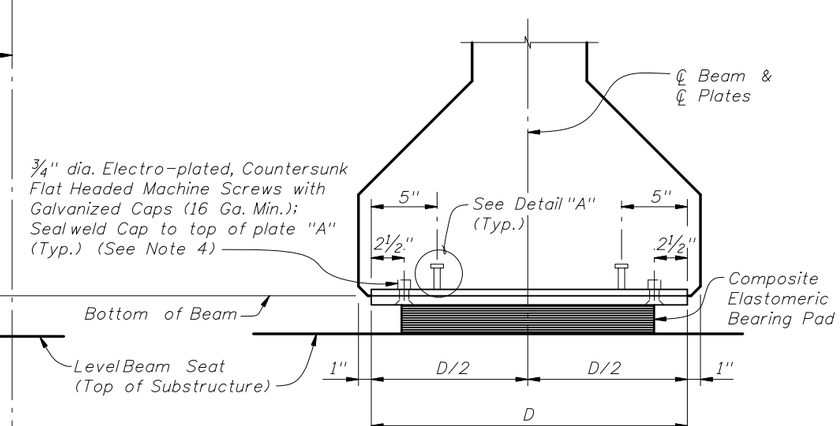

END ELEVATION

2008 FDOT Design Standards

BEVELED BEARING PLATE DETAILS - PRESTRESSED AASHTO AND BULB-T BEAMS

Last Revision	Sheet No.
01/01/06	1 of 1

Index No. 20501