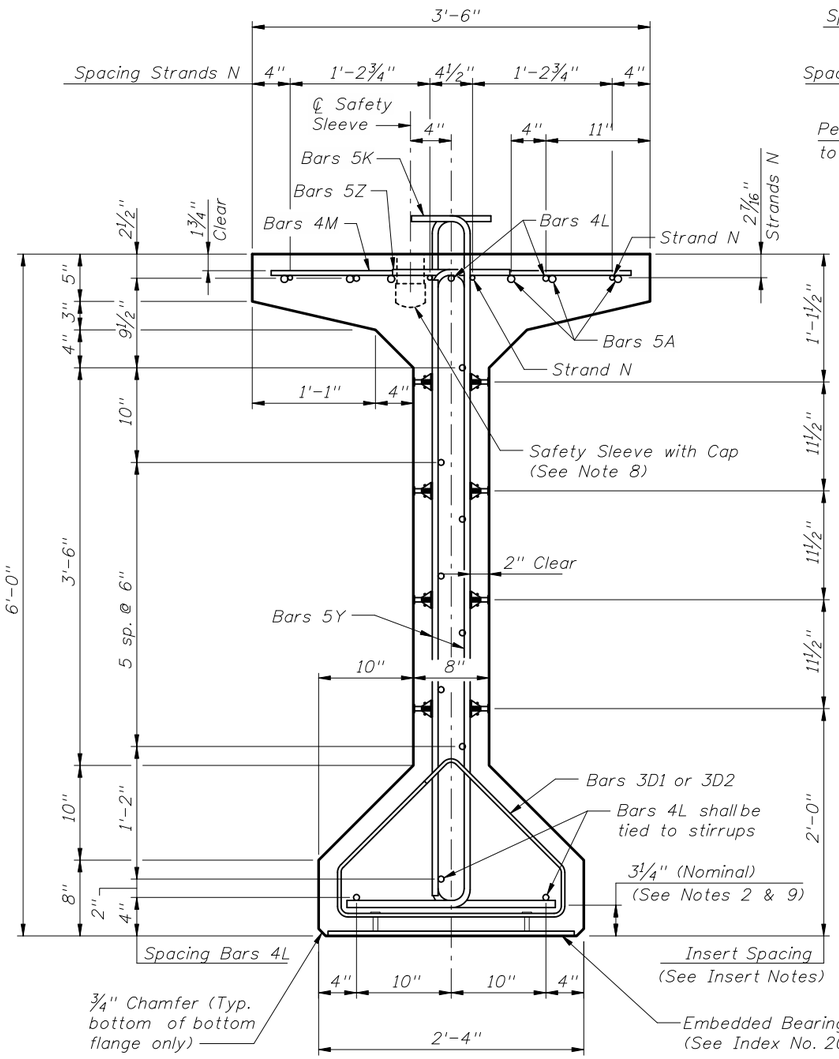

END VIEW

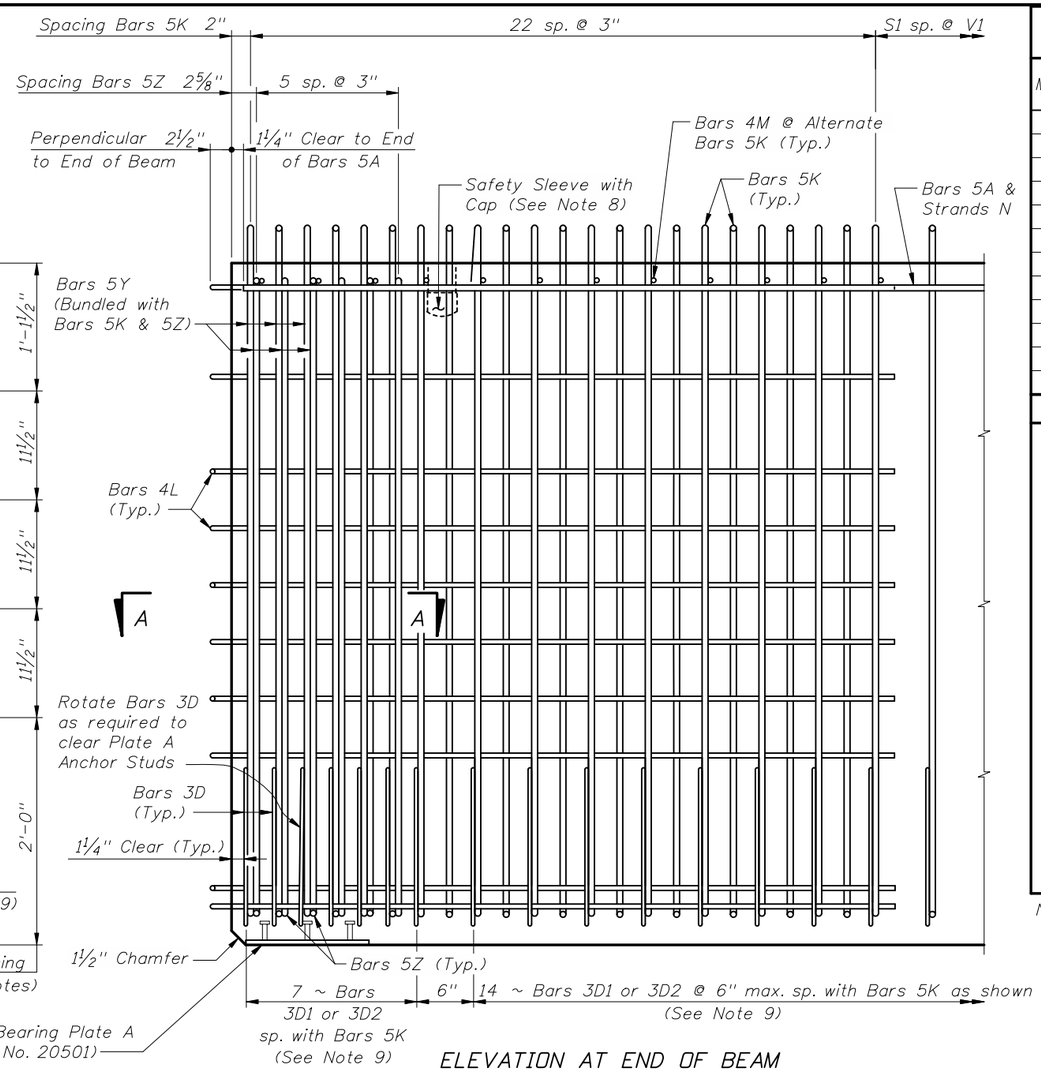

ELEVATION AT END OF BEAM
(Flanges Not Shown For Clarity)

BILL OF REINFORCING STEEL FOR ONE BEAM ONLY

MARK	NOTE NUMBERS	SIZE	NUMBER REQUIRED	LENGTH (NOTE 1)
A	—	5	12	24'-0"
D1	9, 11 & 14	3	21	See Table
D2	9, 11 & 14	3	21	See Table
K	2, 9, 11 & 13	5	See Table	7'-9"
L	3 & 4	4	26	6'-8"
M1	9 & 10	4	15	See Table
M2	9 & 10	4	15	See Table
M3	9	4	See Table	3'-2"
N	5	⅜" Ø Strand	4	DIM L+5"
Y	9 & 11	5	12	5'-5"
Z	2, 9, 11 & 13	5	12	7'-4"

BENDING DIAGRAMS (See Note 1)

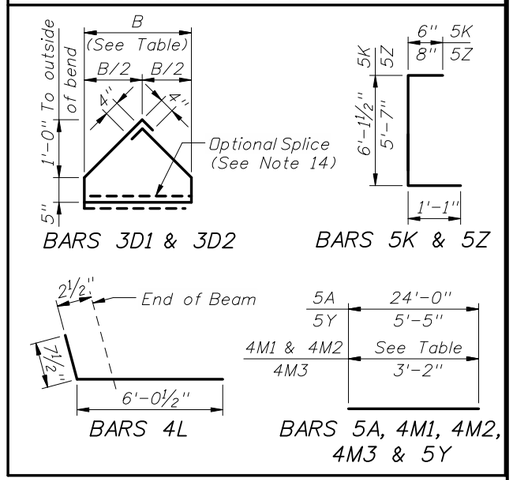

NOTES:

Work this Index with Index No. 20110 - Typical AASHTO and Bulb-T Beam Details and Notes and the AASHTO Type VI Beam - Table of Beam Variables in Structures Plans.

For referenced notes, see Index No. 20110.

For Dimensions L, R, V1 thru V4 and number of spaces S1 thru S4, see AASHTO Type VI Beam - Table of Beam Variables.

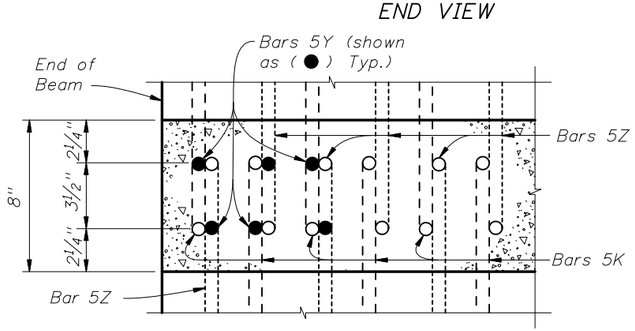

SECTION A-A
(Showing Bars 5K, 5Y & 5Z Only)

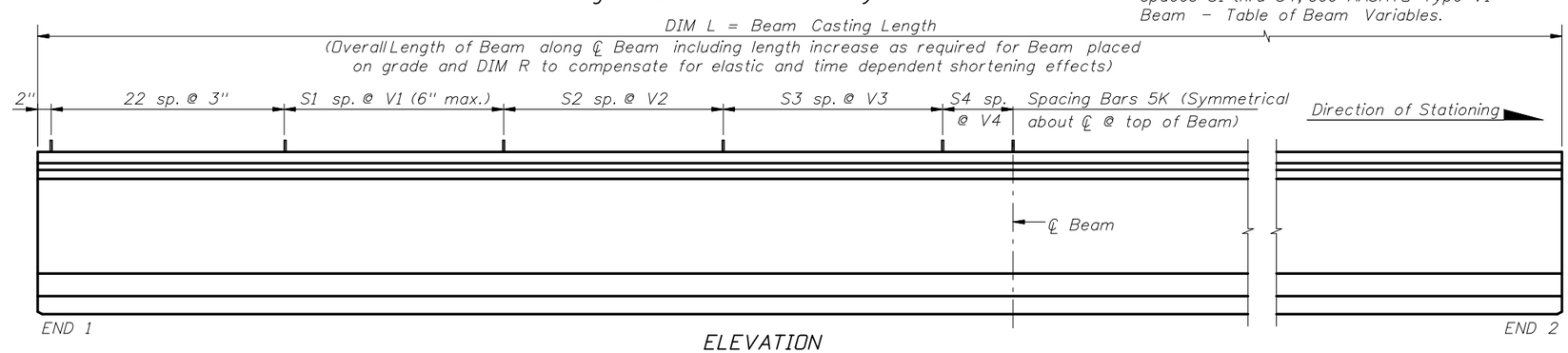

ELEVATION

2008 FDOT Design Standards

AASHTO TYPE VI BEAM - STANDARD DETAILS

Last Revision	Sheet No.
01/01/06	1 of 1

Index No. 20160