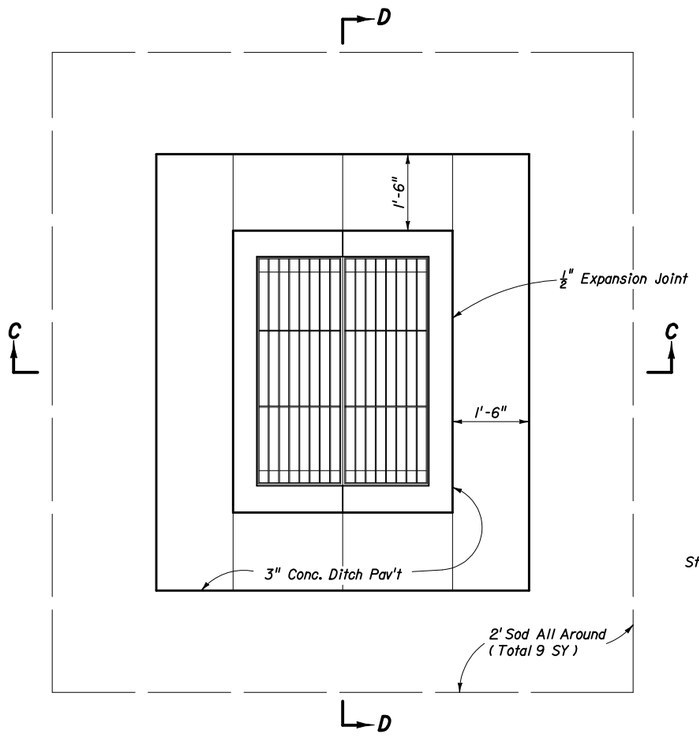

PAVEMENT & SODDING

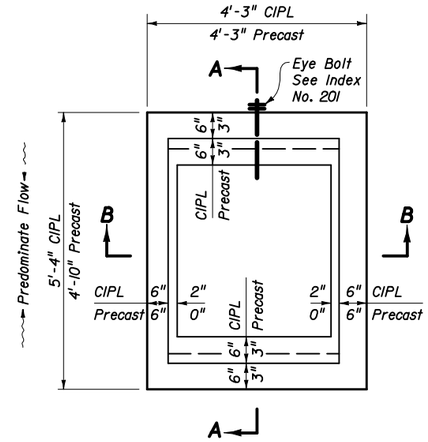

PLAN
(CAST-IN-PLACE INLET SHOWN, WITHOUT GRATE, PRECAST INLET SIMILAR)

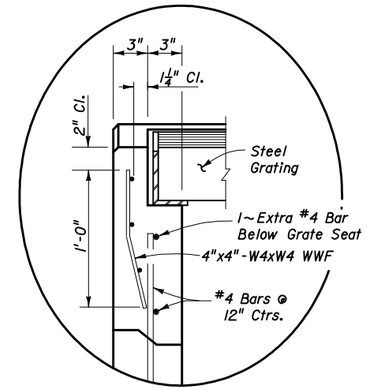

INSET A
(PRECAST OPTION)

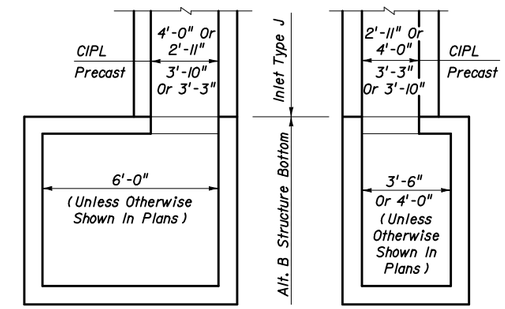

NOTE: Alt. B Structure Bottom Only. See Index No. 200 for structure bottom details and hole reinforcement.

INLET WITH STRUCTURE BOTTOM

RECOMMENDED MAXIMUM PIPE SIZES	
INLET INSIDE WIDTH	PIPE SIZE
2'-11" or 3'-3"	24"
3'-10" or 4'-0"	30"

Note: Recommended sizes are for concrete pipe. Sizes for other types of pipe must be verified for fit in accordance with Index No. 201. For larger pipe, see Structure Bottom detail above and Index No. 200.

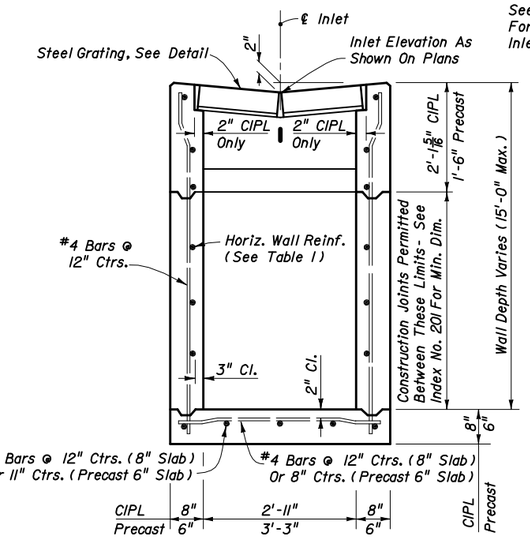

(Pipe Opening Not Shown)

SECTION BB

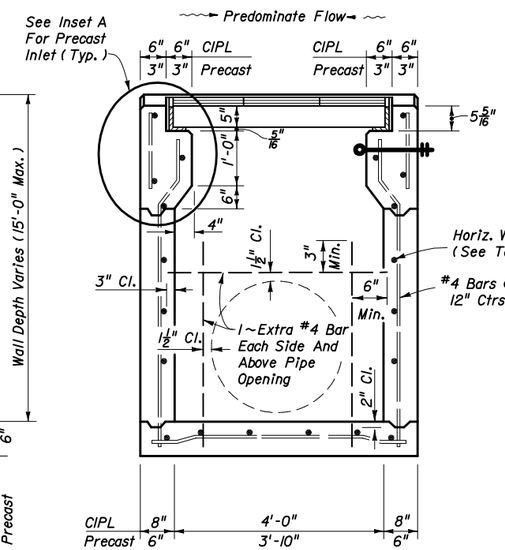

(Pipe Opening Shown)

SECTION AA

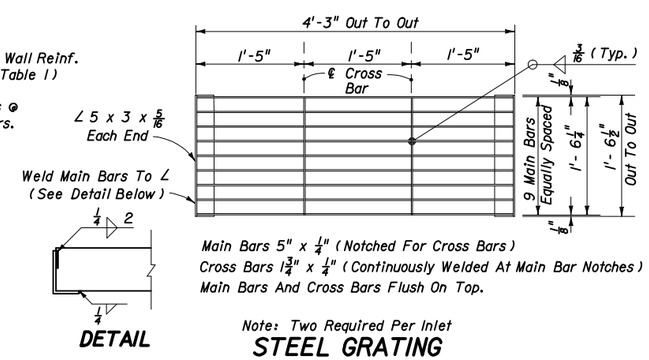

STEEL GRATING

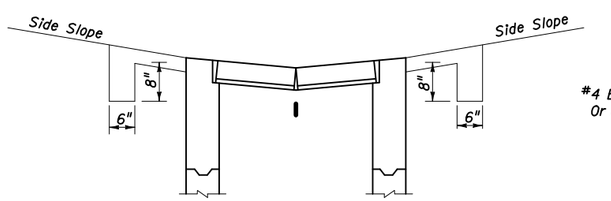

SECTION CC

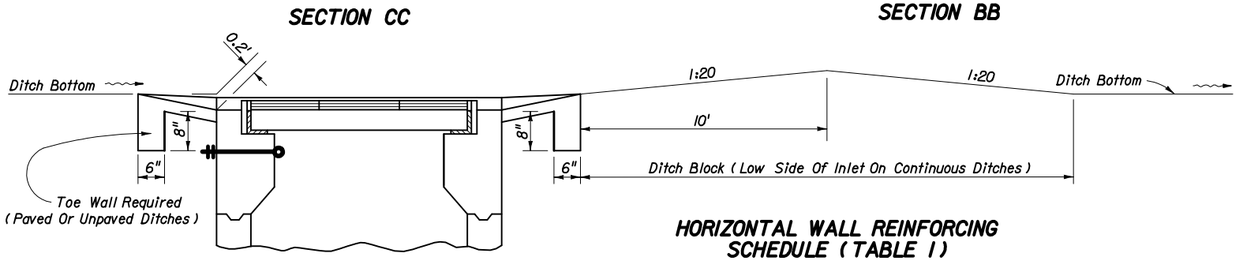

SECTION DD

HORIZONTAL WALL REINFORCING SCHEDULE (TABLE 1)

WALL DEPTH	SCHEDULE	AREA (In^2/ft)	MAX. SPACING	
			BARS	WWF
0' - 4'	A12	0.20	12"	8"
4' - 9'	A6	0.20	6"	5"
9' - 12'	A4	0.20	4"	3"
9' - 15'	B5.5	0.24	5½"	5"

GENERAL NOTES

1. This inlet is designed for use in ditches, medians, pavement areas or other areas subject to heavy wheel loads with minimal debris. This inlet is not for use in areas subject to bicycle traffic. This inlet may be placed in areas subject to occasional pedestrian traffic such as landscaped areas and pavement areas where pedestrians can walk around the inlet.
2. All reinforcing Grade 60 bars with 2" min. cover unless otherwise noted. See Index No. 201 for equivalent area of welded wire fabric. Cut or bend bars out of way of pipe when necessary; bars to clear pipe by 1½".
3. When alternate G grate is specified in plans the grate is to be hot dipped galvanized after fabrication.
4. For supplemental details, see Index No. 201.
5. All dimensions are for both precast and cast-in-place inlets unless otherwise noted.
6. Cost of ditch paving to be included in cost of inlet. Sodding to be paid for under contract unit price for Sodding, SY.

STATE OF FLORIDA DEPARTMENT OF TRANSPORTATION

2006 FDOT Design Standards

DITCH BOTTOM INLET
TYPE J

Last Revision	Sheet No.
07/01/05	1 of 1

Index No.
234