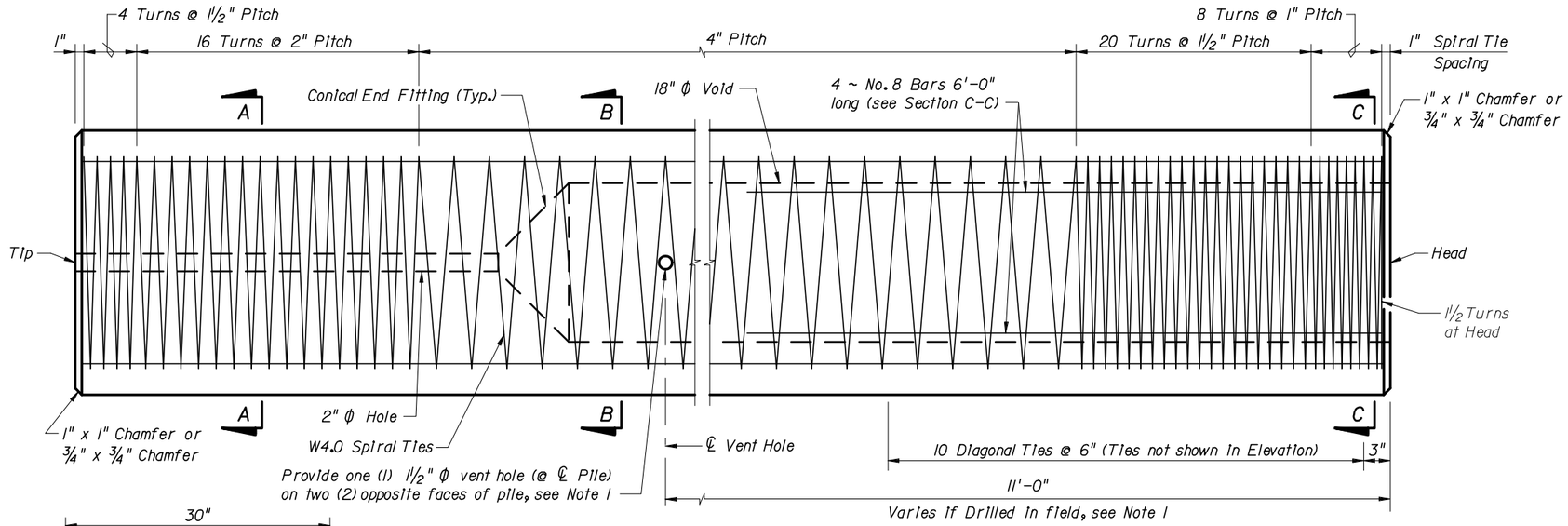

ELEVATION

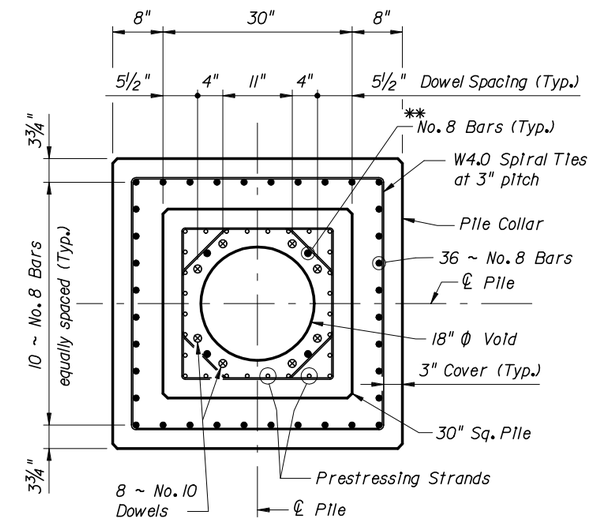

SECTION D-D
SECTION THRU PILE COLLAR

** Omit 4 ~ No. 8 Bars and Diagonal Ties in pre-planned mechanical splice.

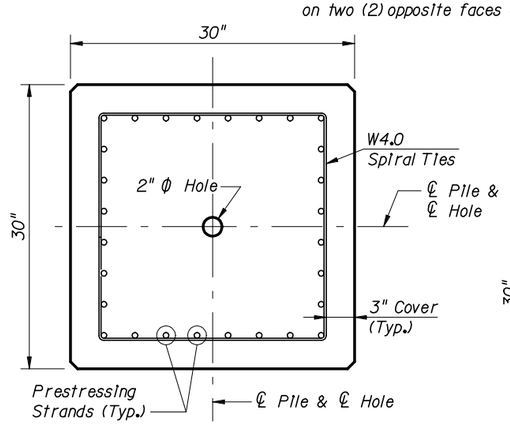

SECTION A-A

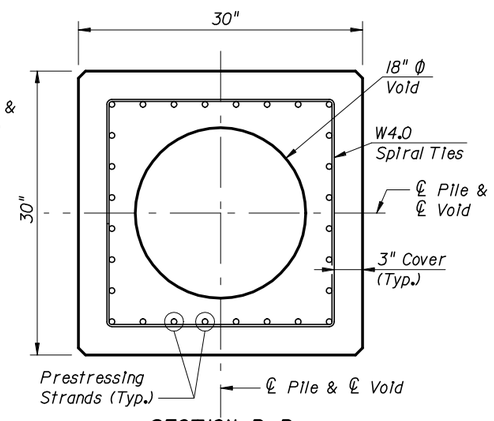

SECTION B-B

STRAND PATTERN

28 ~ 0.6" Φ, Grade 270 LRS, at 29.5 kips

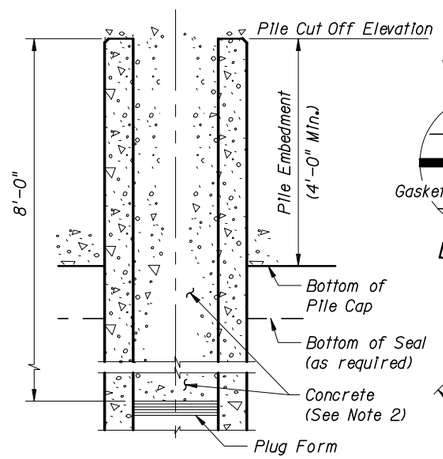

SECTION THROUGH PILE AT PILE CAP

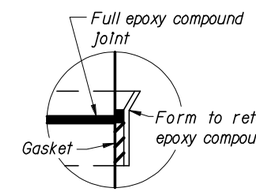

DETAIL A

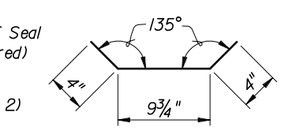

W4.0 DIAGONAL TIE DETAIL

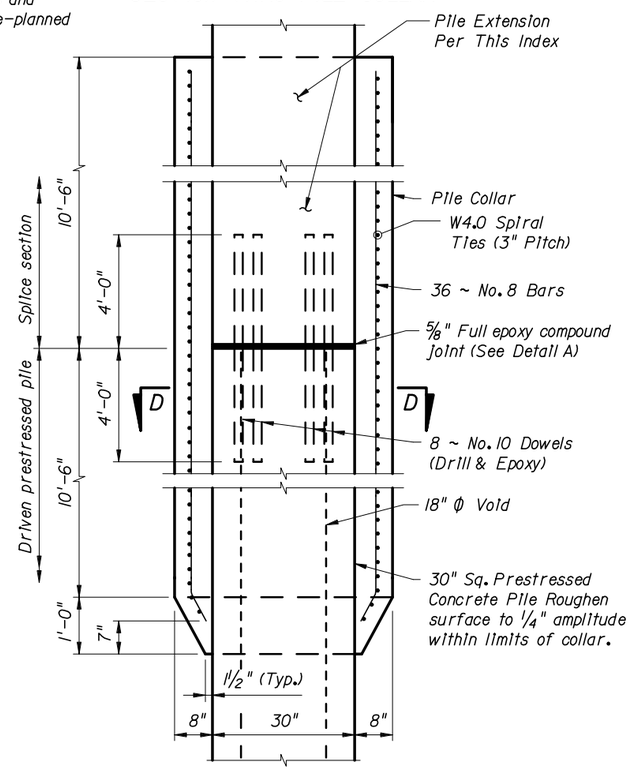

DETAIL OF PILE COLLAR FOR HIGH CAPACITY 30" SQUARE PRESTRESSED PILE
-PILE SPLICE DETAIL-

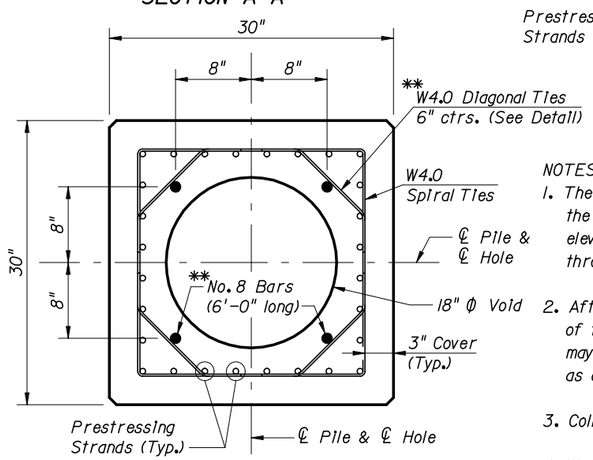

SECTION C-C

NOTES:

1. The 18" Φ Void in the pile shall be positively vented to water or air after the final pile installation. If the 1½" Φ vents are included in the pile cut-off section, two (2) new holes, 1½" Φ, shall be drilled on two (2) opposite faces of the pile below the bottom of substructure elevation. If the pile void can not be vented directly to water or air, then venting shall be provided by the use of a 1" Φ PVC conduit through a substructure cap or column. Voids between segments of spliced piles shall be connected by 2" Φ hole(s).

2. After the pile is driven and cut to grade, the top 8'-0" of the 18" Φ Void shall be filled with concrete. Prior to filling the top 8'-0" of the 18" Φ Void with concrete, strip the cardboard form material from the void. A stay-in-place corrugated thin wall galvanized pipe may be used to form the void in lieu of the cardboard form material. The concrete fill material shall be of the same type and strength as called for in the pile cap and paid for as substructure concrete.

3. Collar concrete shall reach a strength of 6,000 psi before pile driving is resumed.

4. Work this Index with Index No. 20600 - Notes and Details for Square Prestressed Concrete Piles.

STATE OF FLORIDA DEPARTMENT OF TRANSPORTATION	2006 FDOT Design Standards	Last Revision 07/01/05	Sheet No. 1 of 1
	HIGH MOMENT CAPACITY 30" SQUARE PRESTRESSED CONCRETE PILE	Index No. 20631	