| FINANCIAL PROJECT ID | STATE PROJ. NO. | SHEET NO. |
|---|---|---|
| | | |

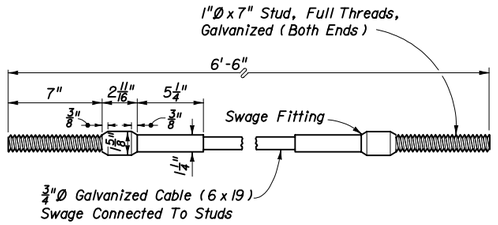


Note: Cable assemblies shall be in accordance with the specifications of AASHTO-AGC-ARTBA 'A Guide To Standardized Highway Barrier Hardware' Cable Anchor Assembly FCA01. An additional cable assembly 9' in length with a swaged fitting on one (1) end is required for each end anchorage assembly Type CRT.

## CABLE ASSEMBLY

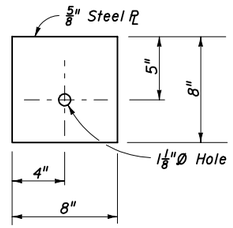


## BEARING PLATE

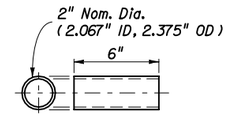


## BREAKAWAY TERMINAL POST SLEEVE

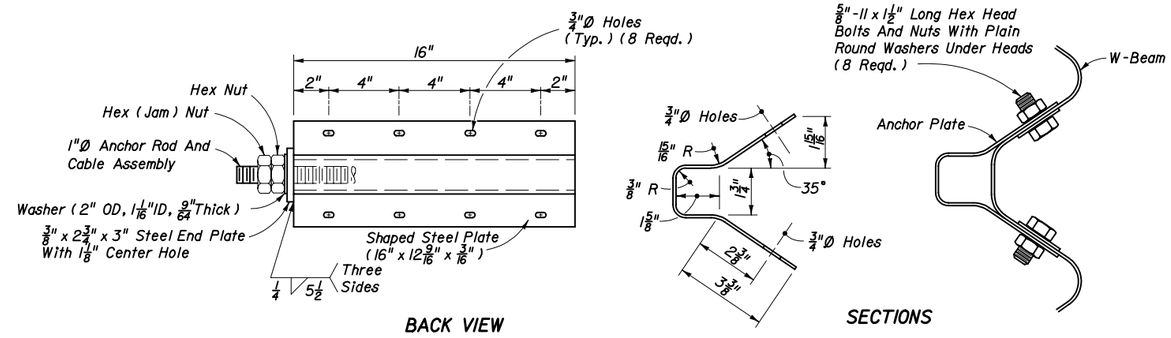


## BEAM ANCHOR PLATE

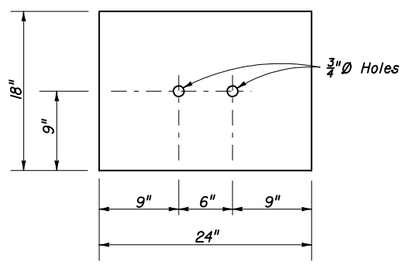


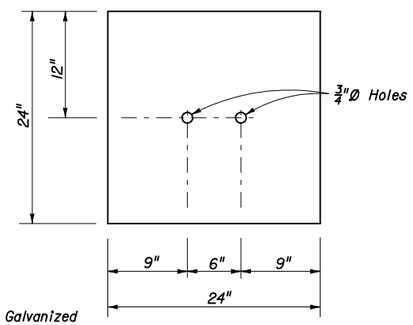


1/4" Steel PL, Galvanized

## SOIL PLATES

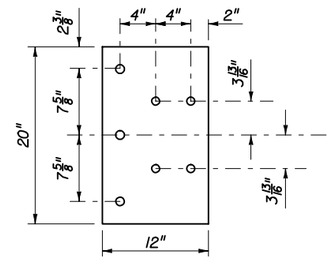


5/8" Plate For Bridge Traffic Railing Barrier
1/4" Plate For Barrier Walls

## THRIE-BEAM TERMINAL CONNECTOR

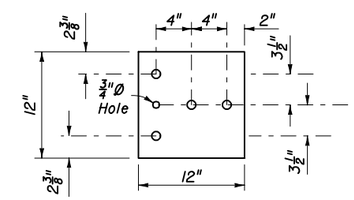


1/4" Plate For All Applications

## SPECIAL END SHOE

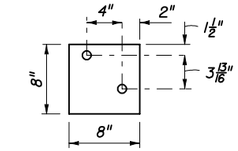


1 1/4" Plate
See Detail J For Application

## FILLER PLATE

All Holes 1"Ø Except As Shown

## GALVANIZED STEEL BACK-UP PLATES FOR CONNECTING SPECIAL END SHOES AND TERMINAL CONNECTORS TO CONCRETE BRIDGE TRAFFIC RAILING BARRIERS AND CONCRETE BARRIER WALLS

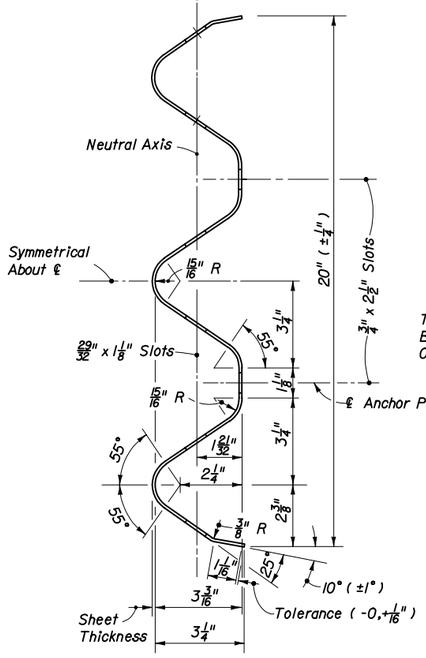


## THRIE-BEAM

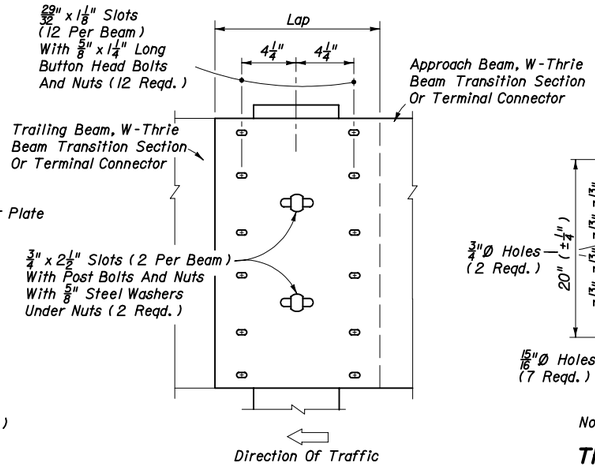


## THRIE-BEAM RAIL SPLICE

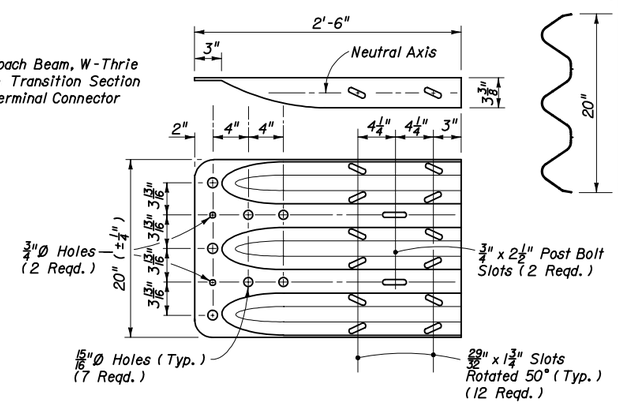


Note: 5/8"Ø steel washer required with splice bolts

## THRIE-BEAM TERMINAL CONNECTOR

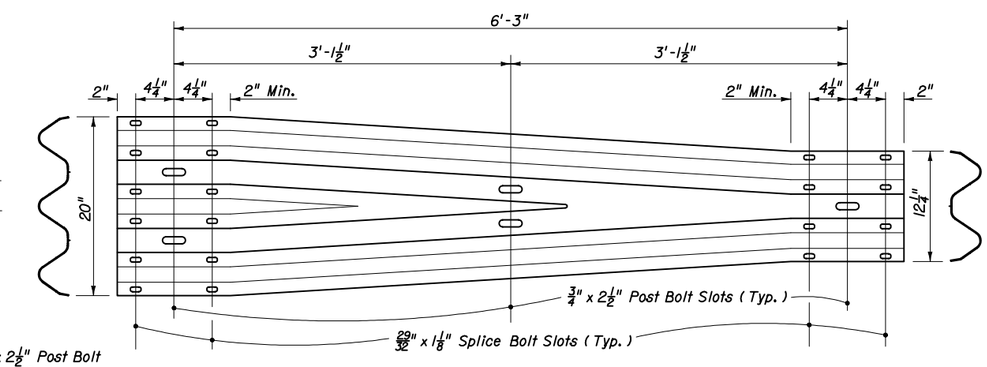


## W-THRIE BEAM TRANSITION SECTION

THE SEALED RECORD OF THIS STANDARD IS ON FILE IN THE ROADWAY DESIGN OFFICE.

INTERIM STANDARD IN ENGLISH UNITS APPLICABLE TO DESIGN STANDARDS BOOKLET PUBLISHED IN ENGLISH UNITS.

Date: 06-30-03

STATE OF FLORIDA DEPARTMENT OF TRANSPORTATION

# GUARDRAIL

INTERIM STANDARD

THIS SHEET REPLACES INDEX NO. 400, SHEET 19 OF 32 OF THE DESIGN STANDARDS, BOOKLET DATED JANUARY 2002.

APPROVED BY Roadway Design Engineer

| REVISION NO. | SHEET NO. | INDEX NO. |
|---|---|---|
| 02 | 1 of 1 | 0400 |