| FINANCIAL PROJECT ID | STATE PROJ. NO. | SHEET NO. |
|---|---|---|
| | | |

## GENERAL NOTES

1. The 'Portable Temporary Low Profile Barrier For Roadside Safety' is a proprietary design by the University Of Florida. Any infringement on the rights of the designer shall be the sole responsibility of the user.

2. This standard drawing (Index No. 412) is provided by the Florida Department Of Transportation solely for use by the Department and its assignees. The purpose for this standard drawing is to indicate the approval of use of the barrier on the State Highway System; to provide sufficient pictorials for identifying the barrier unit; and, to provide general installation geometry for the barrier.

3. Only those barrier units cast by producers licensed by the University Of Florida will be allowed for installation on the State Highway System in Florida.

   Barrier wall units shall be produced in Department approved plants with quality control plans for precasting concrete barrier walls. Each barrier wall unit shall be permanently marked with an identification that is traceable to the manufacturer, the producing precast concrete plant and the date of production. This permanent identification mark will serve as certification that the unit has been manufactured in accordance with University of Florida drawings and specifications, and the approved quality control program.

4. The low profile barrier is to be installed only with hardware and accessories furnished by the licensed barrier producer. Units shall be used for no purpose other than as interconnected segments in a run of barrier.

5. The low profile barrier is applicable for design speeds of 45 mph or less.

6. Tubular markers shall be installed along the run of barrier at the ends and at 50' centers on tangents and 25' centers on radii. The markers shall be fixed to the top of the barrier by an adhesive or other method approved by the engineer. Approach end units shall be marked with a Type I object marker.

7. Information regarding licensing, shop drawings, specifications, quality control and certification of compliance can be obtained from the University Of Florida, Office of Technology Licensing. Inquiries should be addressed to: Office of Technology Licensing, P.O. Box 115500, Gainesville, Florida, 32611-5500. Telephone: 352-392-8929, Fax: 352-392-6600. Reference UF#-11052.

8. The 'Portable Temporary Low Profile Barrier For Roadside Safety' shall be paid for under the contract unit price for Barrier Wall (Temporary) Low Profile Concrete, LF, and will be full compensation for furnishing, installing, maintaining and removing the barrier wall.

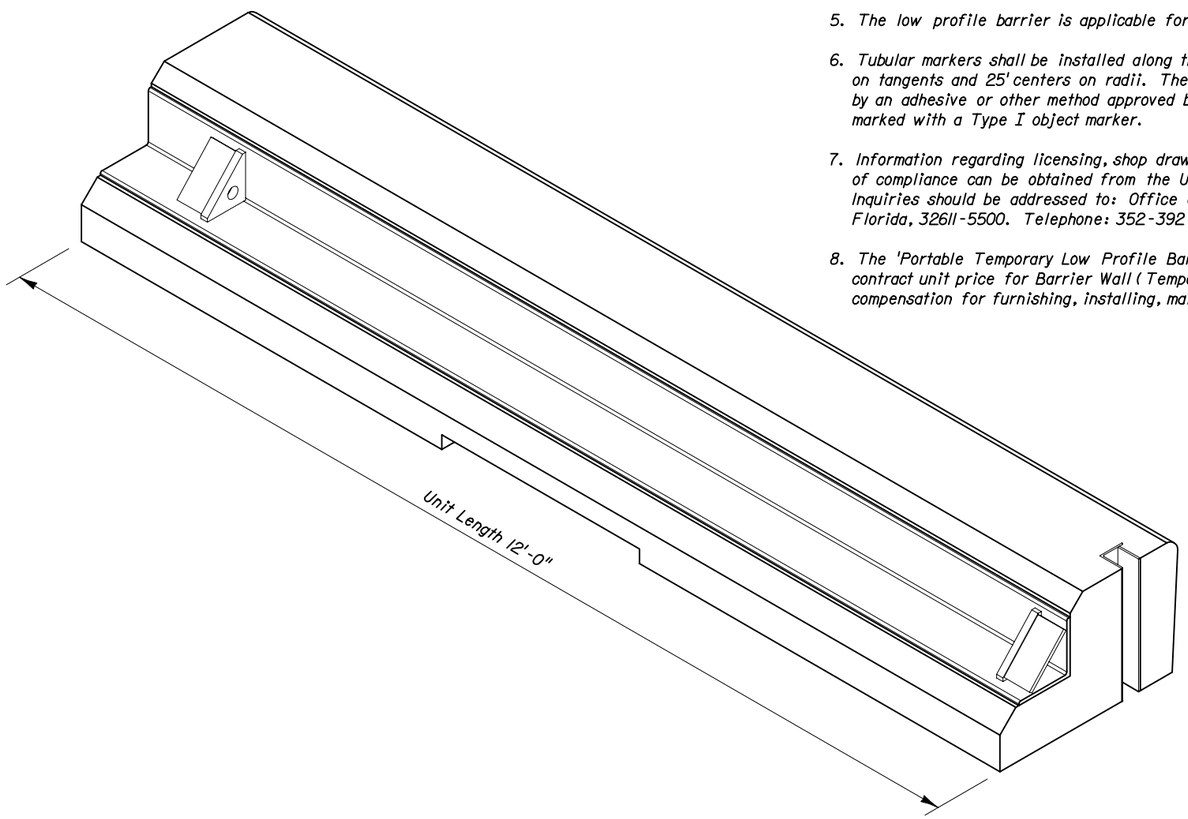


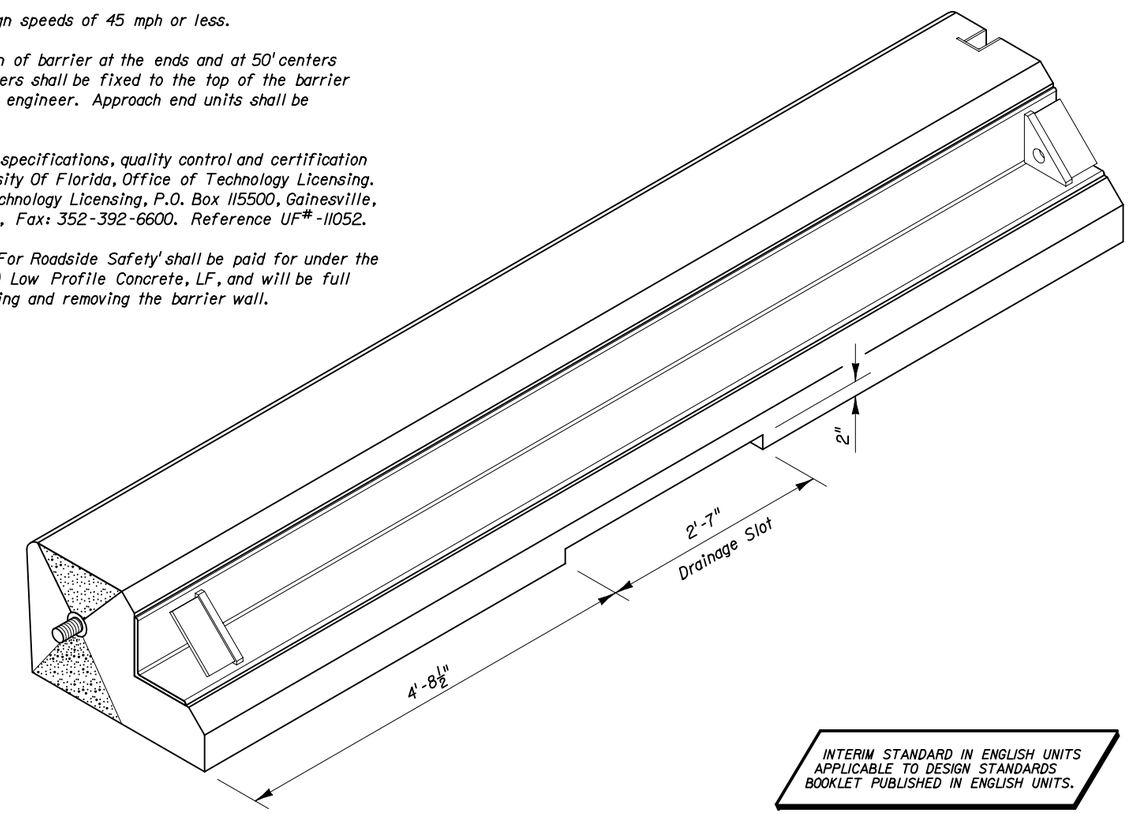


INTERIM STANDARD IN ENGLISH UNITS APPLICABLE TO DESIGN STANDARDS BOOKLET PUBLISHED IN ENGLISH UNITS.

BACKSIDE AND END PICTORIAL VIEWS

PORTABLE TEMPORARY LOW PROFILE BARRIER FOR ROADSIDE SAFETY

Revised: 09-29-03

STATE OF FLORIDA DEPARTMENT OF TRANSPORTATION

PORTABLE TEMPORARY LOW PROFILE BARRIER FOR ROADSIDE SAFETY

INTERIM STANDARD

THIS INDEX IS A SUPPLEMENT TO THE DESIGN STANDARDS, BOOKLET DATED JANUARY 2002.

APPROVED BY
Roadway Design Engineer

| REVISION NO. | SHEET NO. | INDEX NO. |
|---|---|---|
| | 1 of 5 | 412 |

| FINANCIAL PROJECT ID | STATE PROJ. NO. | SHEET NO. |
|---|---|---|
| | | |

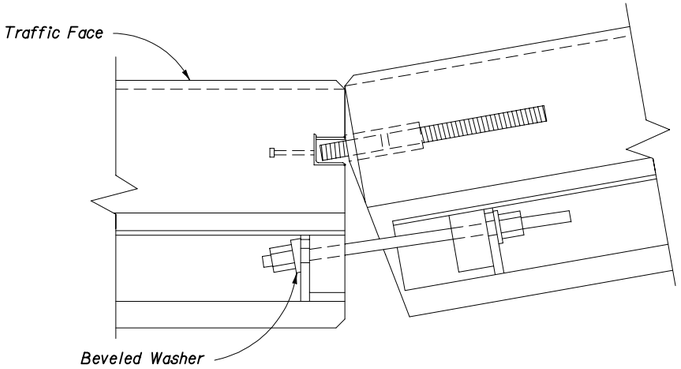


CONCAVE CONNECTION

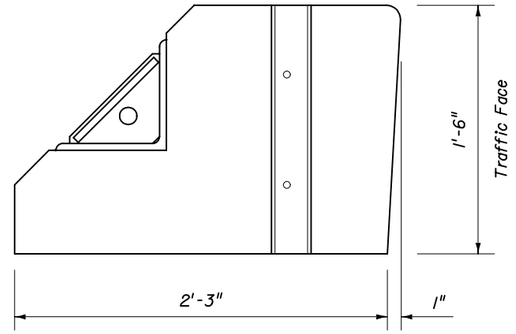


FLAT FACE FEMALE END

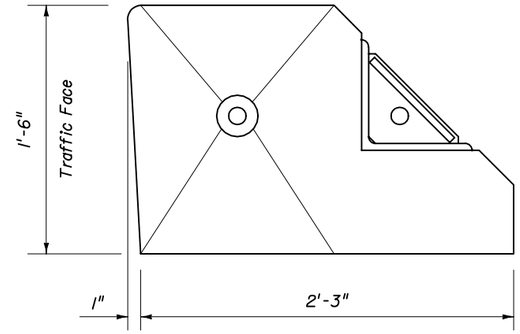


BEVELED FACE MALE END

END VIEWS

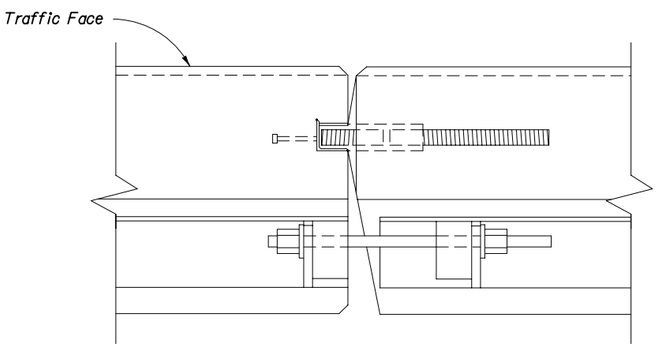


PARALLEL CONNECTION

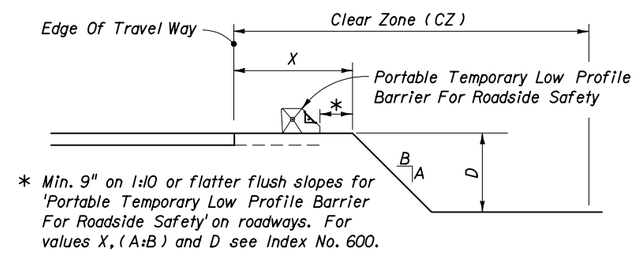


DEFLECTION SPACE AT DROPOFFS

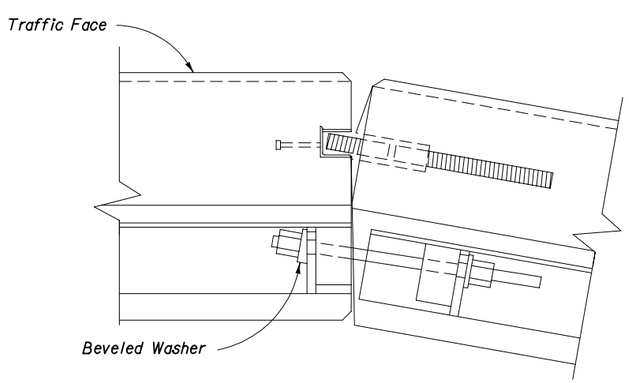


CONVEX CONNECTION

PLAN VIEWS OF CONNECTIONS

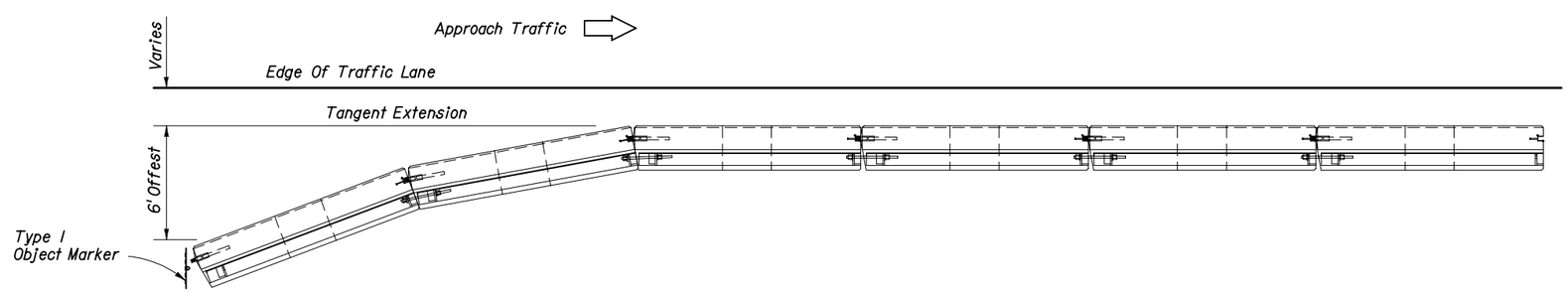


PLAN VIEW OF APPROACH END OFFSET

INTERIM STANDARD IN ENGLISH UNITS APPLICABLE TO DESIGN STANDARDS BOOKLET PUBLISHED IN ENGLISH UNITS.

STATE OF FLORIDA DEPARTMENT OF TRANSPORTATION

PORTABLE TEMPORARY LOW PROFILE BARRIER FOR ROADSIDE SAFETY

INTERIM STANDARD

THIS INDEX IS A SUPPLEMENT TO THE DESIGN STANDARDS, BOOKLETS DATED JANUARY 2002.

APPROVED BY Roadway Design Engineer

| REVISION NO. | SHEET NO. | INDEX NO. |
|---|---|---|
| | 2 of 5 | 412 |

# PORTABLE TEMPORARY LOW PROFILE BARRIER FOR ROADSIDE SAFETY

Date: 07-18-03

| FINANCIAL PROJECT ID | STATE PROJ. NO. | SHEET NO. |
|---|---|---|
| | | |

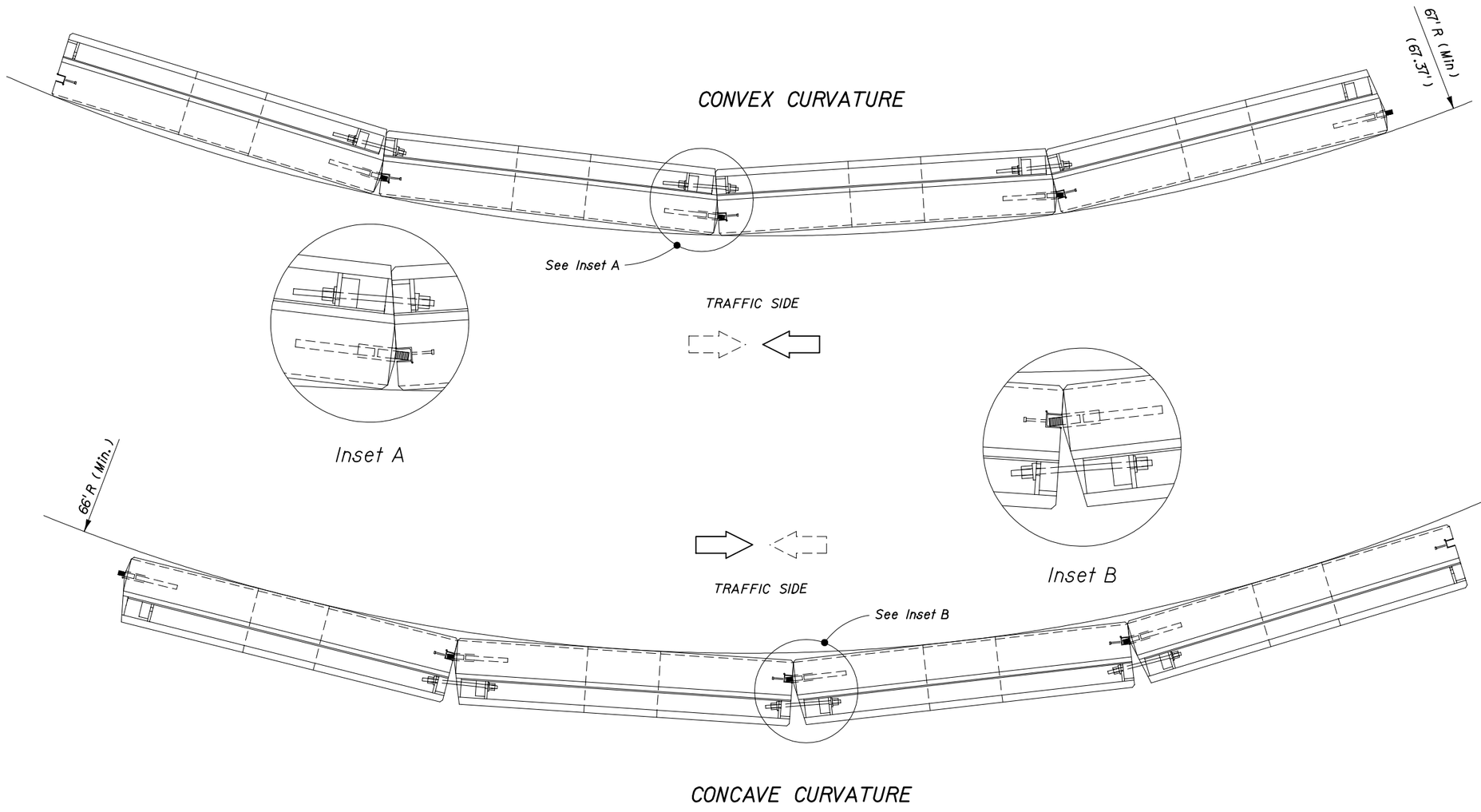


MAXIMUM CURVATURE • MINIMUM RADIUS

INTERIM STANDARD IN ENGLISH UNITS APPLICABLE TO DESIGN STANDARDS BOOKLET PUBLISHED IN ENGLISH UNITS.

STATE OF FLORIDA DEPARTMENT OF TRANSPORTATION

# PORTABLE TEMPORARY LOW PROFILE BARRIER FOR ROADSIDE SAFETY

INTERIM STANDARD

THIS INDEX IS A SUPPLEMENT TO THE DESIGN STANDARDS, BOOKLETS DATED JANUARY 2002.

APPROVED BY
Roadway Design Engineer

| REVISION NO. | SHEET NO. | INDEX NO. |
|---|---|---|
| | 3 of 5 | 412 |

PORTABLE TEMPORARY LOW PROFILE BARRIER FOR ROADSIDE SAFETY

Date: 07-18-03

| FINANCIAL PROJECT ID | STATE PROJ. NO. | SHEET NO. |
|---|---|---|
| | | |

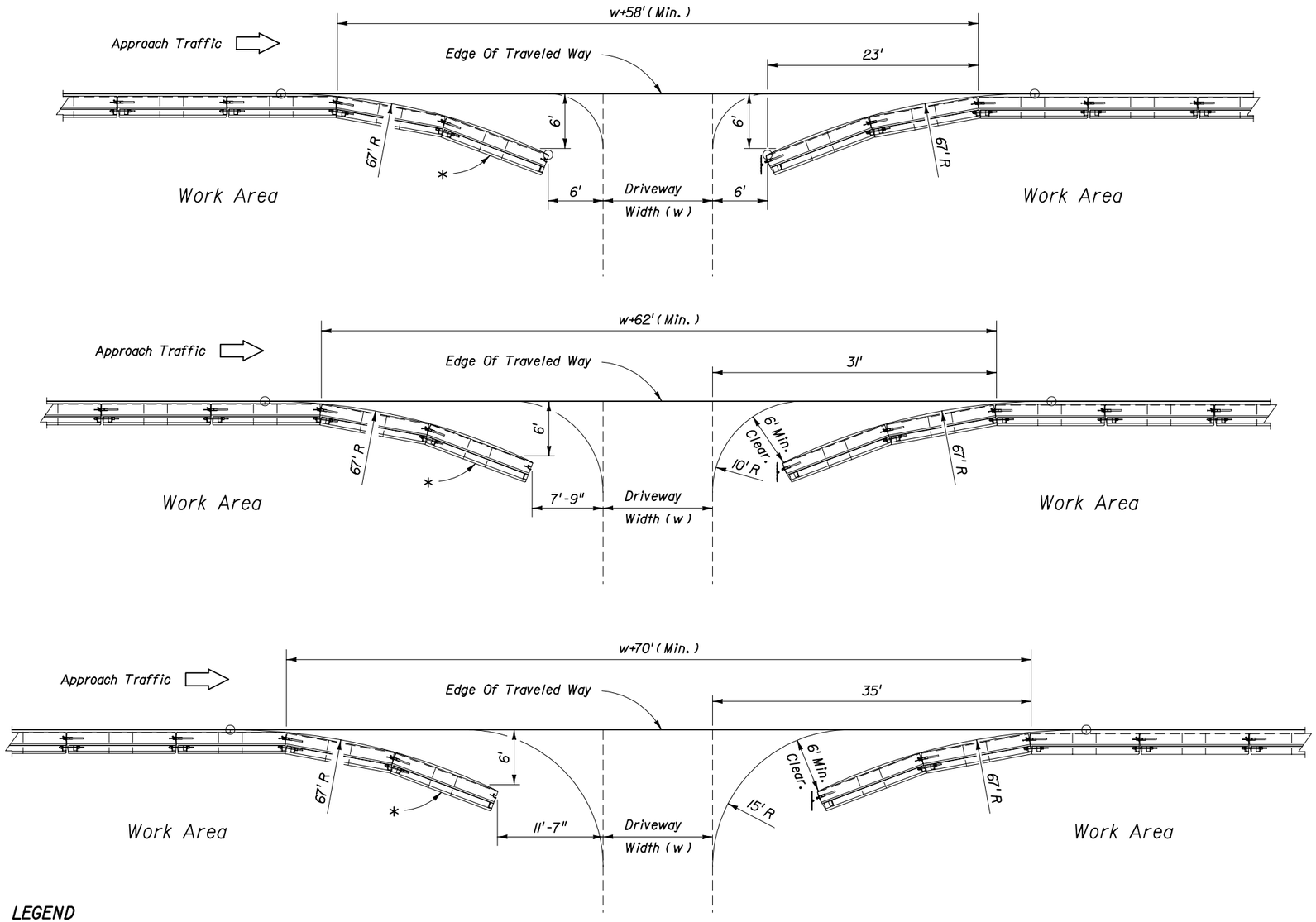


**LEGEND**

Type I Object Marker

* Trailing End Flares Are Not Required When Barrier Located Outside The Clear Zone Of Opposing Traffic

Type I Object Marker To Be Installed When Trailing End Flare Falls Within The Clear Zone Of Opposing Traffic

INTERIM STANDARD IN ENGLISH UNITS APPLICABLE TO DESIGN STANDARDS BOOKLET PUBLISHED IN ENGLISH UNITS.

## BARRIER OPENINGS AT DRIVEWAYS

## PORTABLE TEMPORARY LOW PROFILE BARRIER FOR ROADSIDE SAFETY

Date: 07-18-03

STATE OF FLORIDA DEPARTMENT OF TRANSPORTATION

PORTABLE TEMPORARY LOW PROFILE BARRIER FOR ROADSIDE SAFETY

INTERIM STANDARD

THIS INDEX IS A SUPPLEMENT TO THE DESIGN STANDARDS, BOOKLETS DATED JANUARY 2002.

APPROVED BY Roadway Design Engineer

| REVISION NO. | SHEET NO. | INDEX NO. |
|---|---|---|
| | 4 of 5 | 412 |

| FINANCIAL PROJECT ID | STATE PROJ. NO. | SHEET NO. |
|---|---|---|
| | | |

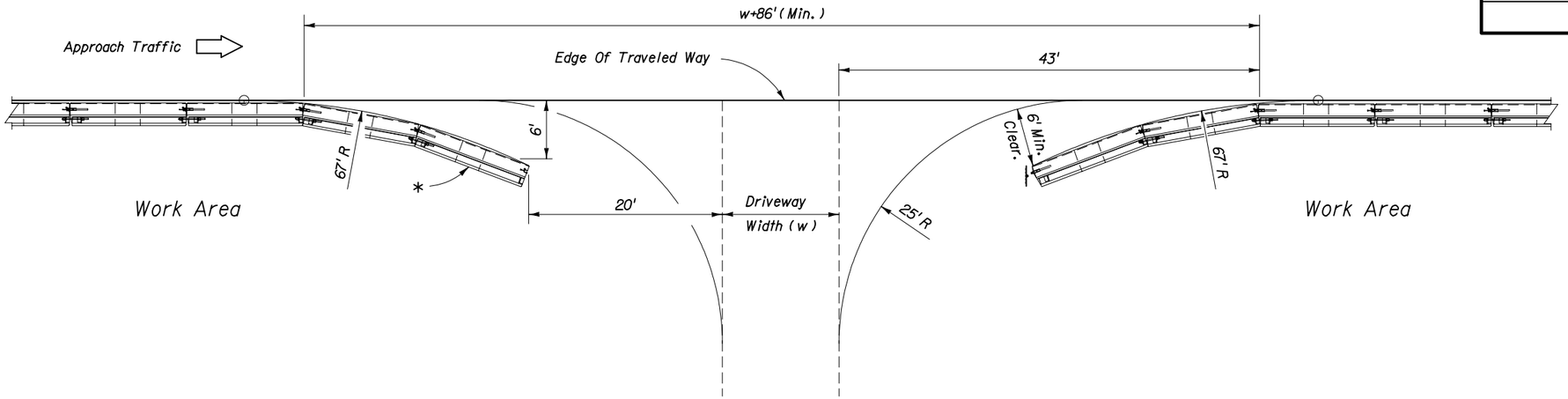


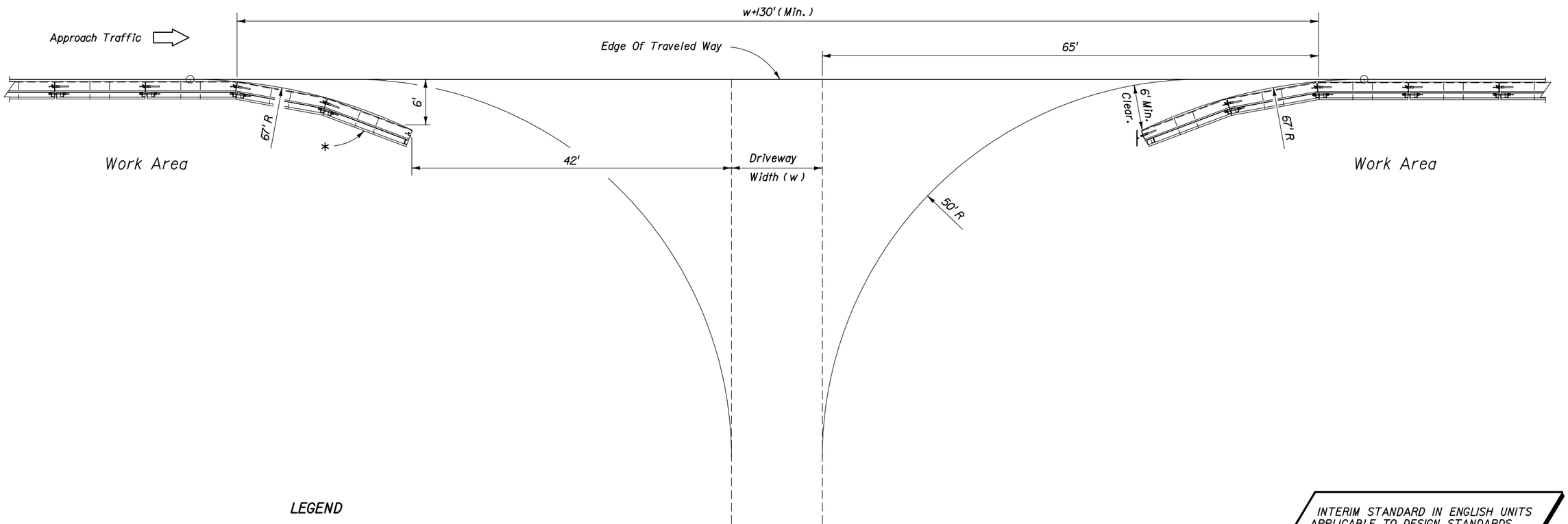


LEGEND

Type I Object Marker

* Trailing End Flares Are Not Required When Barrier Located Outside The Clear Zone Of Opposing Traffic

Type I Object Marker To Be Installed When Trailing End Flare Falls Within The Clear Zone Of Opposing Traffic

INTERIM STANDARD IN ENGLISH UNITS APPLICABLE TO DESIGN STANDARDS BOOKLET PUBLISHED IN ENGLISH UNITS.

## BARRIER OPENINGS AT DRIVEWAYS

# PORTABLE TEMPORARY LOW PROFILE BARRIER FOR ROADSIDE SAFETY

Date: 07-18-03

STATE OF FLORIDA DEPARTMENT OF TRANSPORTATION

PORTABLE TEMPORARY LOW PROFILE BARRIER FOR ROADSIDE SAFETY

INTERIM STANDARD

THIS INDEX IS A SUPPLEMENT TO THE DESIGN STANDARDS, BOOKLETS DATED JANUARY 2002.

APPROVED BY

Roadway Design Engineer

| REVISION NO. | SHEET NO. | INDEX NO. |
|---|---|---|
| | 5 of 5 | 412 |