| FINANCIAL PROJECT ID | STATE PROJ. NO. | SHEET NO. |
|---|---|---|
| | | |

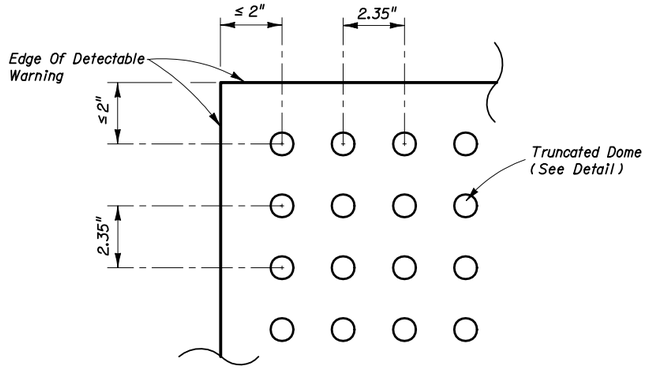


PLAN VIEW

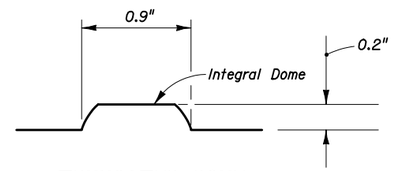


TRUNCATED DOME

# CURB RAMP DETECTABLE WARNING

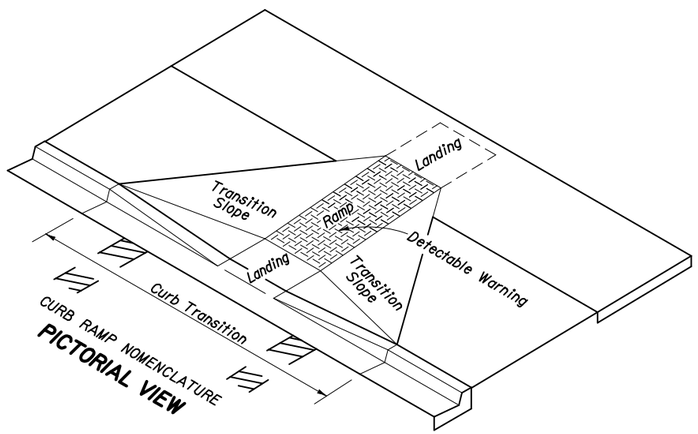


CURB RAMP NOMENCLATURE
PICTORIAL VIEW

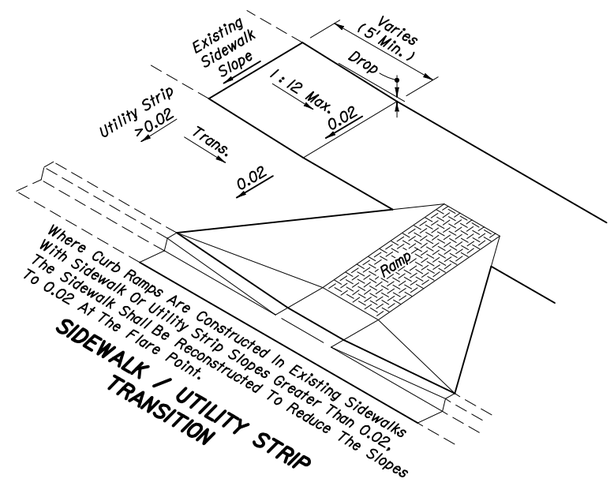


SIDEWALK / UTILITY STRIP TRANSITION

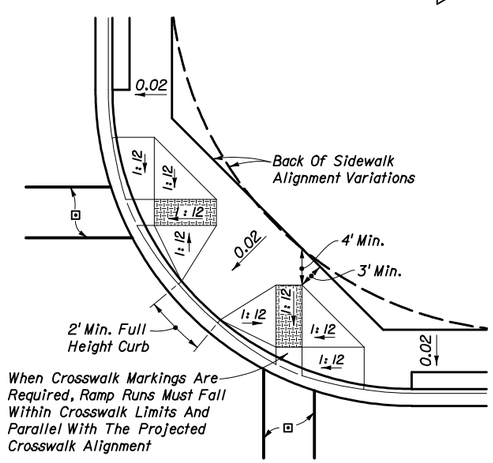


⊡ Crosswalk widths and configuration vary; must conform to Index No. 17344 and 17346.

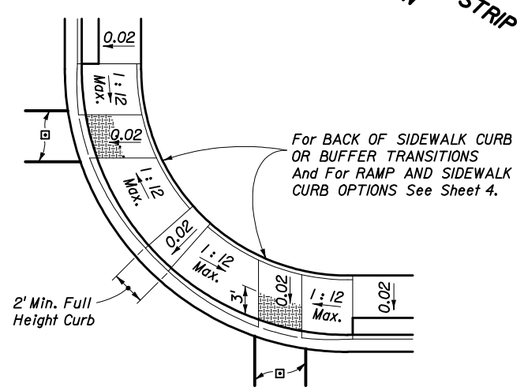


Note: A portion of one or both ramps may extend outside the return.

THE SEALED RECORD OF THIS STANDARD IS ON FILE IN THE ROADWAY DESIGN OFFICE.

INTERIM STANDARD IN ENGLISH UNITS APPLICABLE TO DESIGN STANDARDS BOOKLET PUBLISHED IN ENGLISH UNITS.

Use of this interim index is discretionary through the December 2002 project letting date; use is mandatory beginning with projects let to contract in January 2003.

Revisions To Index No. 304 (Sheet 1 of 5):
(a) Note 3, paragraph 1, sentences 3 and 4- Sentences deleted.
(b) Note 5-Tactile surface references deleted and detectable warning requirements substituted.
(c) Pictorial View-Ramp surface notation revised.
(d) 'CURB RAMP DETECTABLE WARNING' detail added.
(e) Notes 6, 7 & 8: Renumbered 7, 8 & 9: New Note 6 inserted.
(f) Design Notes added.

## GENERAL NOTES

1. Public sidewalk curb ramps shall be constructed in the public right of way at locations that will provide continuous unobstructed pedestrian circulation paths to pedestrian areas, elements and facilities in the public right of way and to accessible pedestrian routes on adjacent sites. Curbed facilities with sidewalks and those without sidewalks are to have curb ramps constructed at all street intersections and at turnouts that have curbed returns. Partial curb returns shall extend to the limit prescribed by Index No. 515 to accommodate curb ramps. Ramps constructed at locations without sidewalks shall have a landing constructed at the top of each ramp, see Sheet 5.

2. The location and orientation of curb ramps shall be as shown in the plans.

3. Curb ramp running slopes at unrestrained sites shall not be steeper than 1 : 12 and cross slope shall be 0.02 or flatter. Transition slopes shall not be steeper than 1 : 12.

   When altering existing pedestrian facilities where existing site development precludes the accommodation of a ramp slope of 1 : 12, a running slope between 1 : 12 and 1 : 10 is permitted for a rise of 6" maximum and a running slope of between 1 : 10 and 1 : 8 is permitted for a rise of 3" maximum. Where compliance with the requirements for cross slope cannot be fully met, the minimum feasible cross slope shall be provided.

   Ramp running slope is not required to exceed 8' in length, except at sites where the plans specify a greater length.

4. If a curb ramp is located where pedestrians must walk across the ramp, then the walk shall have transition slopes to the ramp; the maximum slope of the transitions shall be 1 : 12. Ramps with curb returns may be used at locations where other improvements provide guidance away from that portion of curb perpendicular to the sidewalk; improvements for guidance are not required at curb ramps for linear pedestrian traffic.

5. When perpendicular curb ramps abut the back of curb a detectable warning shall be applied to the full width and length of the ramp. When landings of parallel curb ramps abut the back of curb the detectable warning shall extend full width and 3' back of the curb. The detectable warning on curb ramps for linear pedestrian traffic and for corner ramps under conditions of infeasibility are to conform with the details in this Index for those specific ramp types. Detectable warnings shall be constructed by texturing a truncated dome pattern in conformance with U.S. Department of Justice A.D.A. Standards For Accessibe Design, A.D.A. Accessibility Guidelines, Section 4.29.2, (detail shown above left). Transition slopes are not to have detectable warnings.

6. Unless otherwise called out in the plans, the ramp detectable surface shall be colored in accordance with Section 351 of the Standard Specifications.

7. Where a curb ramp is constructed within existing curb, curb and gutter and/or sidewalk, the existing curb or curb and gutter shall be removed to the nearest joint beyond the curb transitions or to the extent that no remaining section of curb or curb and gutter is less than 5' long. The existing sidewalk shall be removed to the nearest joint beyond the transition slope or walk around or to the extent that no remaining section of sidewalk is less than 5' long.

8. Alpha-numeric identifications are for reference (plans, permits, etc.).

9. Public sidewalk curb ramps are to be paid for as follows:
   Ramps, reconstructed sidewalks, walk around sidewalks, sidewalk landings and sidewalk curbs are to be paid for under the contract unit price for Sidewalk Concrete, (__" Thick), SY. Curb transitions and reconstructed curbs are to be paid for under the contract unit price for the parent curb, i.e., Curb Conc., (Type __), LF or Curb and Gutter Conc., (Type __), LF.

   When a separate pay item for the removal and disposal of existing curb, curb and gutter, and/or sidewalk is not provided in the plans, the cost of removal and disposal of these features shall be included in the contract unit price for new curb, curb and gutter and/or sidewalk respectively.

## DESIGN NOTES

1. The color requirement in General Note 6 is applicable for curb ramps adjoining non-colored sidewalks constructed with standard Class I Portland Cement Concrete in accordance with Section 522 of the Standard Specifications. Where adjoining sidewalks are colored or are constructed with materials other than standard Class I Portland Cement Concrete, the plans must provide for curb ramp surface colors or materials that contrast with the adjoining surfaces by at least 70 %. Contrast is determined by:

   Contrast = [(B1 - B2)/B1] x 100

   Where B1 = light reflectance value (LRV) of the lighter area and B2 = light reflectance value (LRV) of the darker area.

# TYPICAL PLACEMENT OF PUBLIC SIDEWALK CURB RAMPS AT CURBED RETURNS

Revised: 6-06-02

STATE OF FLORIDA DEPARTMENT OF TRANSPORTATION

# PUBLIC SIDEWALK CURB RAMPS

INTERIM STANDARD

THIS SHEET REPLACES INDEX NO. 304 (SHEET 1 OF 5) OF THE DESIGN STANDARDS, BOOKLET DATED JANUARY 2002.

APPROVED BY Brian Blanchard
State Roadway Design Engineer

| REVISION NO. | SHEET NO. | INDEX NO. |
|---|---|---|
| | 1 of 5 | 0304 |