| FINANCIAL PROJECT ID | STATE PROJ. NO. | SHEET NO. |
|---|---|---|
| | | |

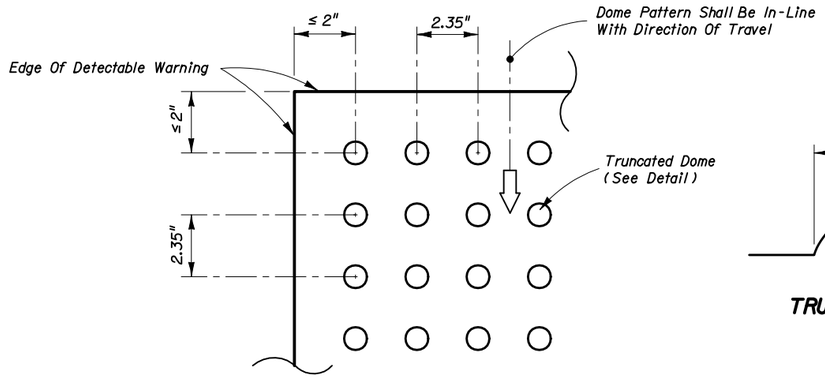


PLAN VIEW

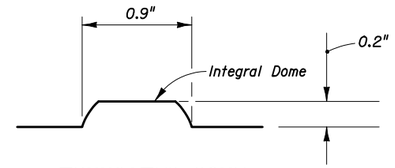


TRUNCATED DOME

All Sidewalk Curb Ramps Shall Have Detectable Warning Surfaces That Extend The Full Width Of The Ramp And In The Direction Of Travel 24 Inches (610 mm) From The Back Of Curb.

## CURB RAMP DETECTABLE WARNING

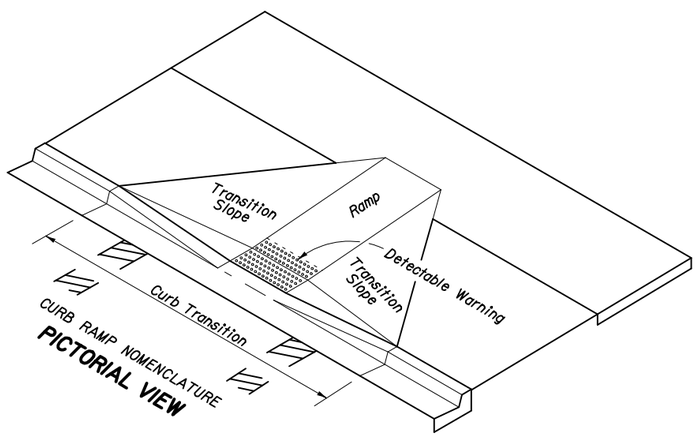


CURB RAMP NOMENCLATURE
PICTORIAL VIEW

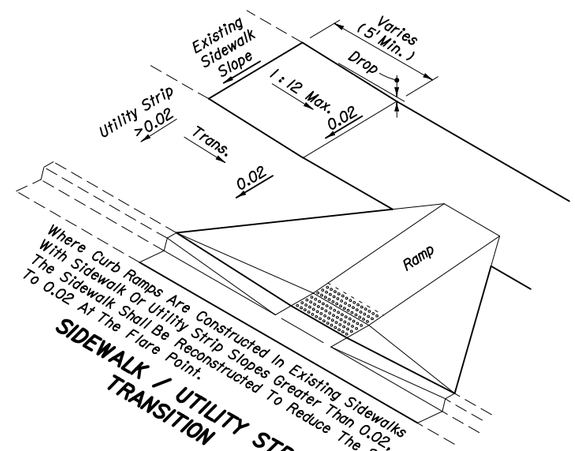


Where Curb Ramps Are Constructed In Existing Sidewalks With Sidewalk Or Utility Strip Slopes Greater Than 0.02, The Sidewalk Shall Be Reconstructed To Reduce The Slopes To 0.02 At The Flare Point.

SIDEWALK / UTILITY STRIP TRANSITION

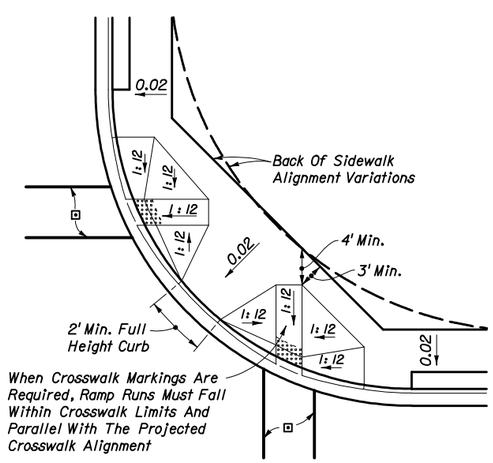


⊡ Crosswalk widths and configuration vary; must conform to Index No. 17344 and 17346.

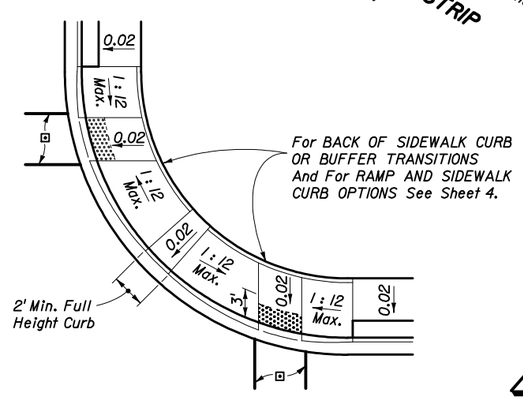


Note: A portion of one or both ramps may extend outside the return.

## TYPICAL PLACEMENT OF PUBLIC SIDEWALK CURB RAMPS AT CURBED RETURNS

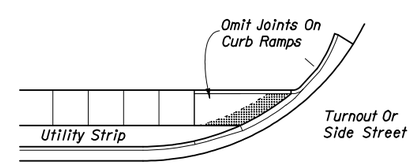


LINEAR SIDEWALK RAMPS

## GENERAL NOTES

1. Public sidewalk curb ramps shall be constructed in the public right of way at locations that will provide continuous unobstructed pedestrian circulation paths to pedestrian areas, elements and facilities in the public right of way and to accessible pedestrian routes on adjacent sites. Curbed facilities with sidewalks and those without sidewalks are to have curb ramps constructed at all street intersections and at turnouts that have curbed returns. Partial curb returns shall extend to the limit prescribed by Index No. 515 to accommodate curb ramps. Ramps constructed at locations without sidewalks shall have a landing constructed at the top of each ramp, see Sheet 5.

2. The location and orientation of curb ramps shall be as shown in the plans.

3. Curb ramp running slopes at unrestrained sites shall not be steeper than 1 : 12 and cross slope shall be 0.02 or flatter. Transitiion slopes shall not be steeper than 1 : 12.

   When altering existing pedestrian facilities where existing site development precludes the accommodation of a ramp slope of 1 : 12, a running slope between 1 : 12 and 1 : 10 is permitted for a rise of 6" maximum and a running slope of between 1 : 10 and 1 : 8 is permitted for a rise of 3" maximum. Where compliance with the requirements for cross slope cannot be fully met, the minimum feasible cross slope shall be provided.

   Ramp running slope is not required to exceed 8' in length, except at sites where the plans specify a greater length.

4. If a curb ramp is located where pedestrians must walk across the ramp, then the walk shall have transition slopes to the ramp; the maximum slope of the transitions shall be 1 : 12. Ramps with curb returns may be used at locations where other improvements provide guidance away from that portion of curb perpendicular to the sidewalk; improvements for guidance are not required at curb ramps for linear pedestrian traffic.

5. Curb ramp detectable warning surfaces shall extend the full width of the ramp and in the direction of travel 24" from the back of curb. Detectable warning surfaces shall be constructed by texturing a truncated dome pattern in conformance with U.S. Department of Justice A.D.A. Standards For Accessible Design, A.D.A. Accessibility Guidelines, Section 4.29.2, (detail shown above left). Transition slopes are not to have detectable warnings.

6. Unless otherwise called out in the plans, the ramp detectable warning surface shall be colored in accordance with Section 351 of the Standard Specifications.

7. Where a curb ramp is constructed within existing curb, curb and gutter and/or sidewalk, the existing curb or curb and gutter shall be removed to the nearest joint beyond the curb transitions or to the extent that no remaining section of curb or curb and gutter is less than 5' long. The existing sidewalk shall be removed to the nearest joint beyond the transition slope or walk around or to the extent that no remaining section of sidewalk is less than 5' long.

8. Alpha-numeric identifications are for reference (plans, permits, etc.).

9. Public sidewalk curb ramps are to be paid for as follows:
   Ramps, reconstructed sidewalks, walk around sidewalks, sidewalk landings and sidewalk curbs are to be paid for under the contract unit price for Sidewalk Concrete, (__" Thick), SY. Curb transitions and reconstructed curbs are to be paid for under the contract unit price for the parent curb, i.e., Curb Conc., (Type __), LF or Curb and Gutter Conc., (Type __), LF.

   When a separate pay item for the removal and disposal of existing curb, curb and gutter, and/or sidewalk is not provided in the plans, the cost of removal and disposal of these features shall be included in the contract unit price for new curb, curb and gutter and/or sidewalk respectively.

## DESIGN NOTES

1. The color requirement in General Note 6 is to provide a dark-on-light visual contrast between the detectable warning surface and the adjacent walking surface. Where adjacent walking surfaces are colored or are constructed with materials other than standard Class I Portland Cement Concrete in accordance with Section 522 of the Standard Specifications, the plans must provide for detectable warning surface colors or materials that provide the necessary contrast, either dark-on-light or light-on-dark.

THE SEALED RECORD OF THIS STANDARD IS ON FILE IN THE ROADWAY DESIGN OFFICE.

INTERIM STANDARD IN ENGLISH UNITS APPLICABLE TO DESIGN STANDARDS BOOKLET PUBLISHED IN ENGLISH UNITS.

Use of this interim index is discretionary through the December 2002 project letting date; use is mandatory beginning with projects let to contract in January 2003.

Revisions To Index No. 304 (Sheet 1 of 5):
(a) Note 3, paragraph 1, sentences 3 and 4- Sentences deleted.
(b) Note 5-Tactile surface references deleted and detectable warning requirements substituted.
(c) Pictorial View-Ramp surface notation revised.
(d) 'CURB RAMP DETECTABLE WARNING' detail added.
(e) Notes 6, 7 & 8: Renumbered 7, 8 & 9: New Note 6 inserted.
(f) Design Notes added.

Revised: 7-24-02

STATE OF FLORIDA DEPARTMENT OF TRANSPORTATION

# PUBLIC SIDEWALK CURB RAMPS

INTERIM STANDARD

THIS SHEET REPLACES INDEX NO. 304 (SHEET 1 OF 5) OF THE DESIGN STANDARDS, BOOKLET DATED JANUARY 2002.

APPROVED BY
Roadway Design Engineer

| REVISION NO. | SHEET NO. | INDEX NO. |
|---|---|---|
| | 1 of 5 | 0304 |

| FINANCIAL PROJECT ID | STATE PROJ. NO. | SHEET NO. |
|---|---|---|
| | | |

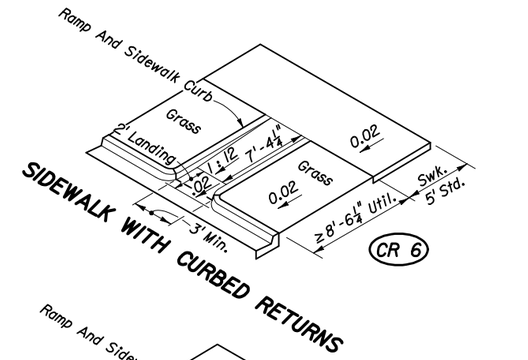


SIDEWALK WITH CURBED RETURNS

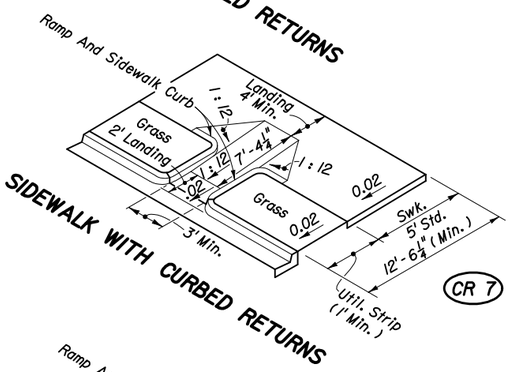


SIDEWALK WITH CURBED RETURNS

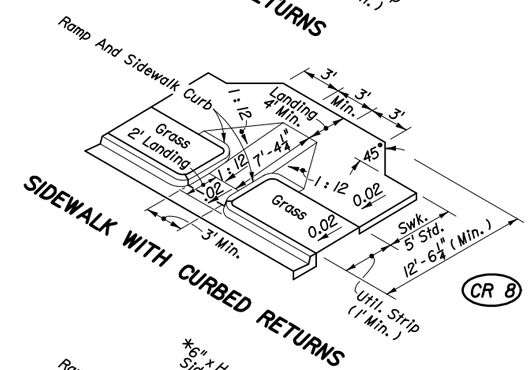


SIDEWALK WITH CURBED RETURNS

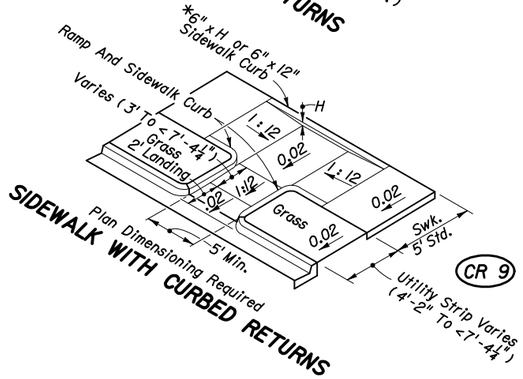


SIDEWALK WITH CURBED RETURNS

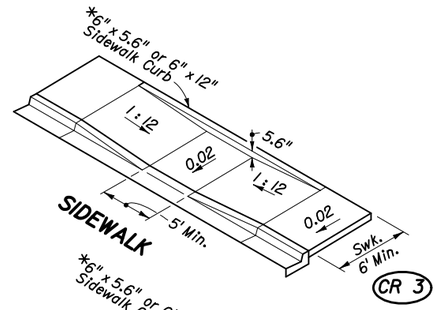


SIDEWALK

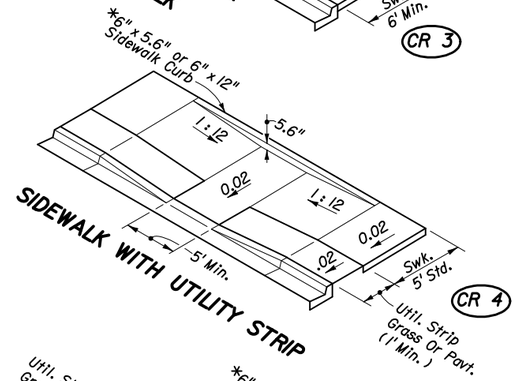


SIDEWALK WITH UTILITY STRIP

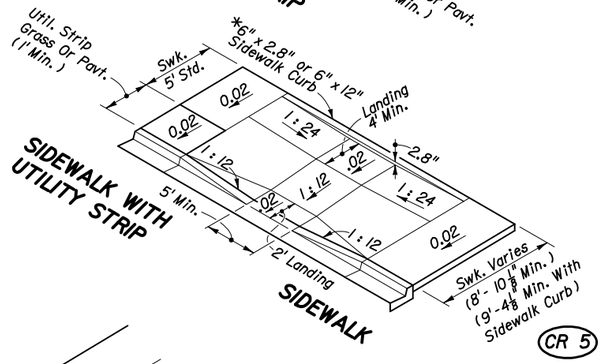


SIDEWALK WITH UTILITY STRIP

SIDEWALK

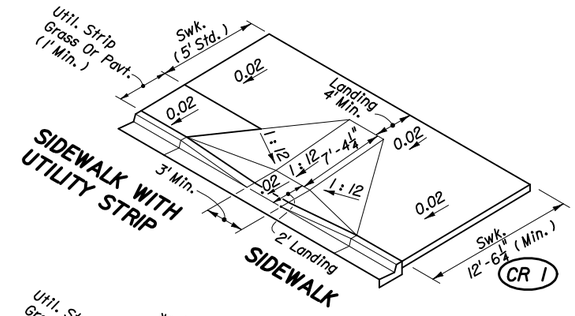


SIDEWALK WITH UTILITY STRIP

SIDEWALK

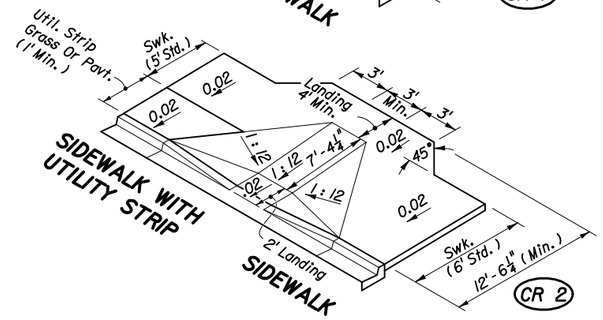


SIDEWALK WITH UTILITY STRIP

SIDEWALK

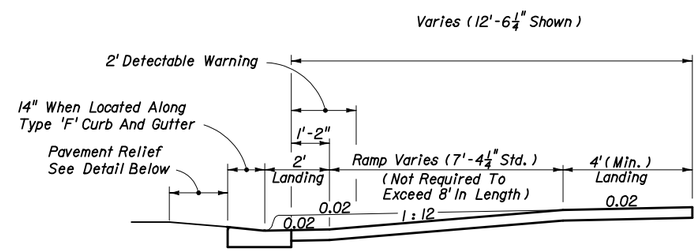


SECTION THROUGH RAMP RUN AND LANDINGS WITH UPPER LANDING AT NORMAL SIDEWALK ELEVATION

* For BACK OF SIDEWALK CURB OR BUFFER TRANSITION And For RAMP AND SIDEWALK CURB OPTIONS See Sheet 4.

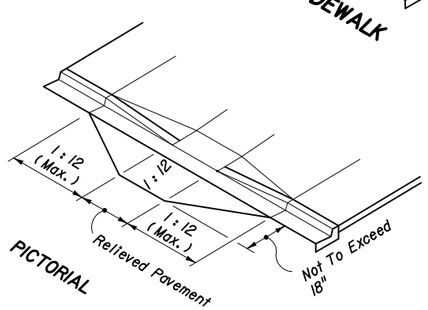


PICTORIAL

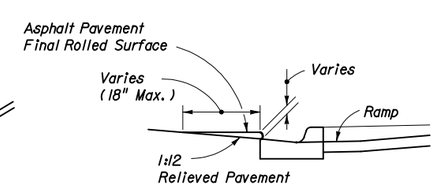


Remove Elevated Pavement By Spading And Rolling; Smooth Milling; or, Grinding

SECTION

PAVEMENT RELIEF AT LIP OF CURB

THE SEALED RECORD OF THIS STANDARD IS ON FILE IN THE ROADWAY DESIGN OFFICE.

INTERIM STANDARD IN ENGLISH UNITS APPLICABLE TO ROADWAY AND TRAFFIC DESIGN STANDARD BOOKLETS PUBLISHED IN EITHER ENGLISH OR METRIC UNITS.

# DIMENSIONAL FEATURES FOR PUBLIC SIDEWALK CURB RAMPS WHERE RAMP AND LANDING DEPTH ARE NOT RESTRICTED BY RIGHT OF WAY

Revised: 7-24-02

STATE OF FLORIDA DEPARTMENT OF TRANSPORTATION

## PUBLIC SIDEWALK CURB RAMPS

INTERIM STANDARD

THIS SHEET REPLACES INDEX NO. 304 (SHEET 2 OF 5) OF THE DESIGN STANDARDS, BOOKLET DATED JANUARY 2002.

APPROVED BY Roadway Design Engineer

| REVISION NO. | SHEET NO. | INDEX NO. |
|---|---|---|
| | 2 of 5 | 0304 |

| FINANCIAL PROJECT ID | STATE PROJ. NO. | SHEET NO. |
|---|---|---|
| | | |

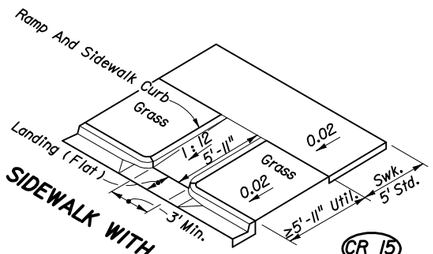


SIDEWALK WITH CURBED RETURNS

CR 15

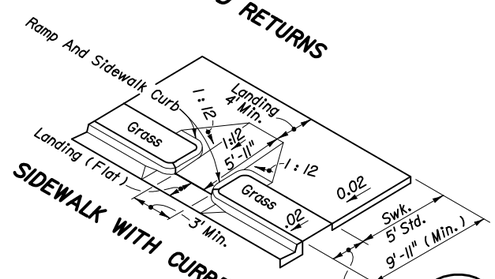


SIDEWALK WITH CURBED RETURNS

CR 16

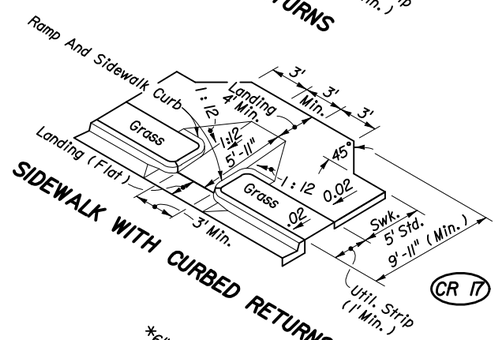


SIDEWALK WITH CURBED RETURNS

CR 17

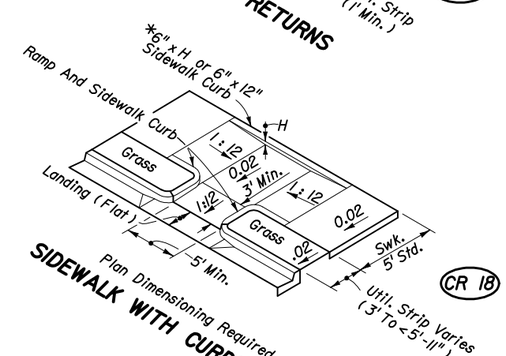


SIDEWALK WITH CURBED RETURNS

CR 18

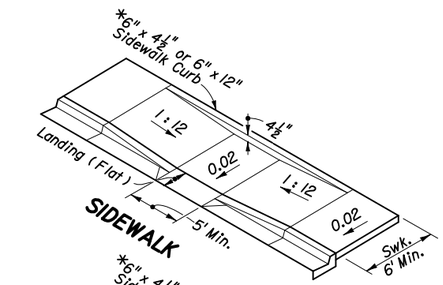


SIDEWALK

CR 12

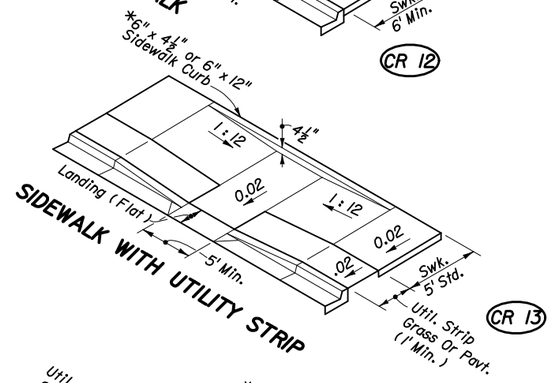


SIDEWALK WITH UTILITY STRIP

CR 13

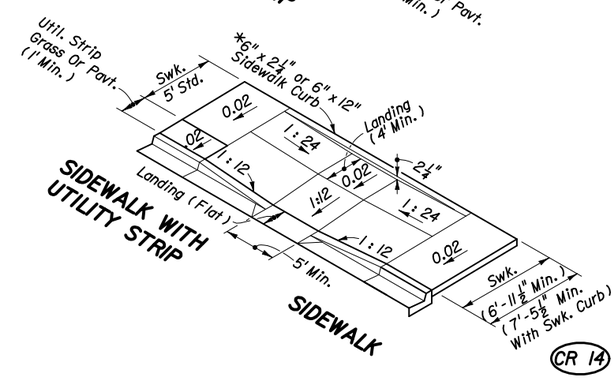


SIDEWALK WITH UTILITY STRIP

SIDEWALK

CR 14

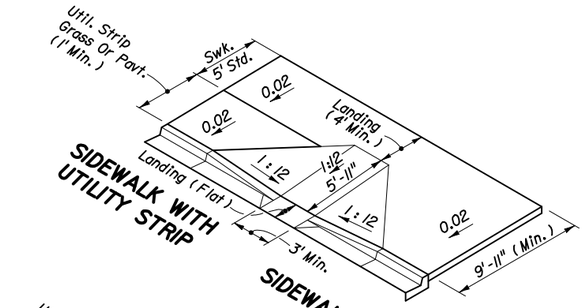


SIDEWALK WITH UTILITY STRIP

SIDEWALK

CR 10

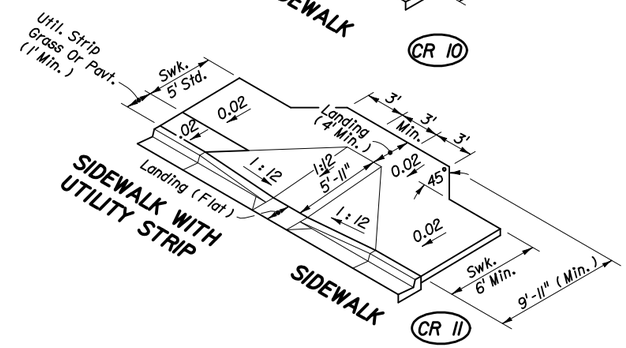


SIDEWALK WITH UTILITY STRIP

SIDEWALK

CR 11

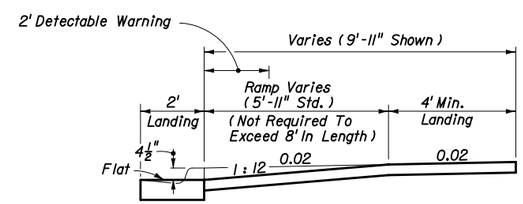


SECTION THROUGH RAMP RUN AND LANDINGS WITH UPPER LANDING AT NORMAL SIDEWALK ELEVATION

* For BACK OF SIDEWALK CURB OR BUFFER TRANSITION And For RAMP AND SIDEWALK CURB OPTIONS See Sheet 4.

THE SEALED RECORD OF THIS STANDARD IS ON FILE IN THE ROADWAY DESIGN OFFICE.

INTERIM STANDARD IN ENGLISH UNITS APPLICABLE TO DESIGN STANDARDS BOOKLET PUBLISHED IN ENGLISH UNITS.

# DIMENSIONAL FEATURES FOR PUBLIC SIDEWALK CURB RAMPS WHERE RAMP AND LANDING DEPTH ARE RESTRICTED BY RIGHT OF WAY

Revised: 7-24-02

STATE OF FLORIDA DEPARTMENT OF TRANSPORTATION

## PUBLIC SIDEWALK CURB RAMPS

INTERIM STANDARD

THIS SHEET REPLACES INDEX NO. 304 (SHEET 3 OF 5) OF THE DESIGN STANDARDS, BOOKLET DATED JANUARY 2002.

APPROVED BY Roadway Design Engineer

| REVISION NO. | SHEET NO. | INDEX NO. |
|---|---|---|
| | 3 of 5 | 0304 |

| FINANCIAL PROJECT ID | STATE PROJ. NO. | SHEET NO. |
|---|---|---|
| | | |

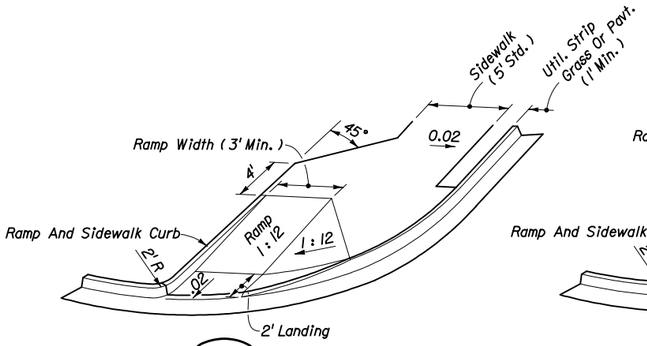


CR 25

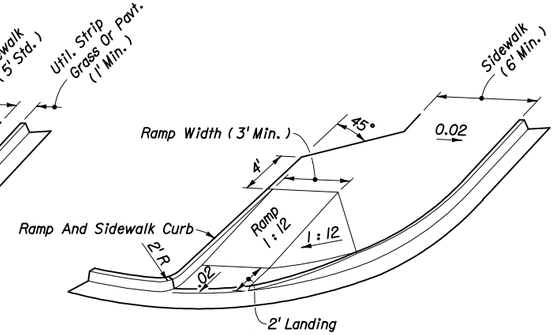


CR 24

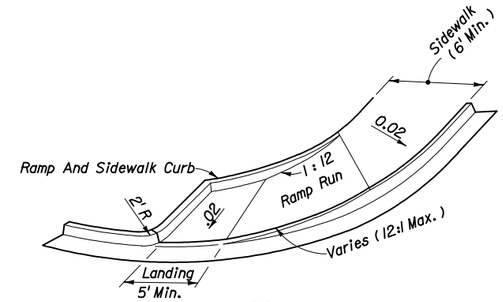


CR 23

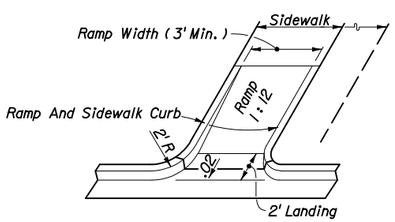


CR 22

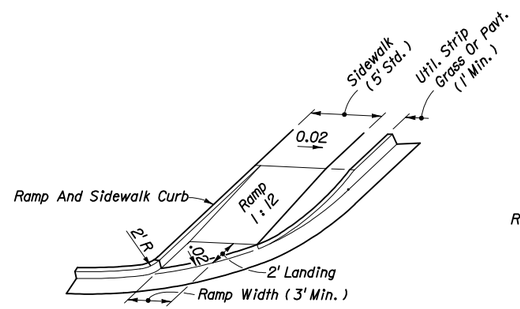


CR 21

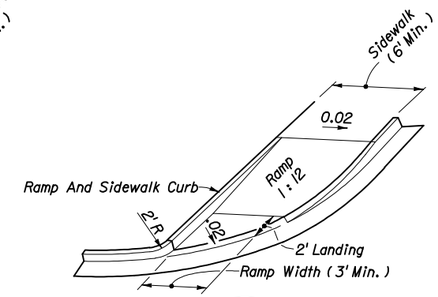


CR 20

## DIMENSIONAL FEATURES FOR PUBLIC SIDEWALK CURB RAMPS FOR LINEAR PEDESTRIAN TRAFFIC

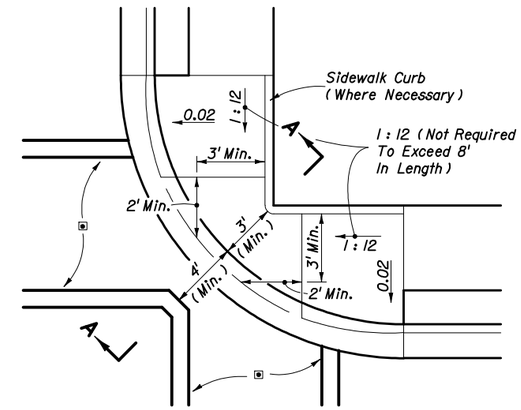


▣ Crosswalk width and configuration vary; must conform to Index No. 17344 and 17346.

**PLAN**

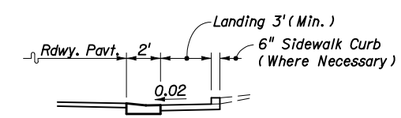


**SECTION AA**

CR 26

## DIMENSIONAL FEATURES FOR PUBLIC SIDEWALK COMBINED CORNER RAMPS UNDER CONDITIONS OF INFEASIBILITY

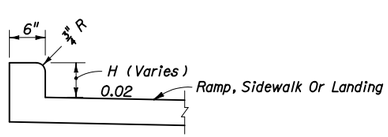


**MONOLITHIC CAST CURB**

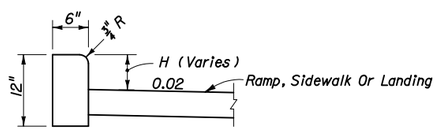


**SEPARATELY CAST CURB**

## RAMP AND SIDEWALK CURB OPTIONS

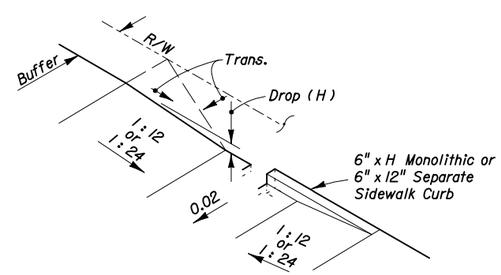


Construct Sidewalk Curb In Absence Of Adequate Buffer, Maintainable Surface Contour, Abuting Structure, Or When Called For In The Plans Or Standards

## BACK OF SIDEWALK CURB OR BUFFER TRANSITION

THE SEALED RECORD OF THIS STANDARD IS ON FILE IN THE ROADWAY DESIGN OFFICE.

INTERIM STANDARD IN ENGLISH UNITS APPLICABLE TO DESIGN STANDARDS BOOKLET PUBLISHED IN ENGLISH UNITS.

Revised: 7-24-02

STATE OF FLORIDA DEPARTMENT OF TRANSPORTATION

# PUBLIC SIDEWALK CURB RAMPS

INTERIM STANDARD

THIS SHEET REPLACES INDEX NO. 304 (SHEET 4 OF 5) OF THE DESIGN STANDARDS, BOOKLET DATED JANUARY 2002.

APPROVED BY Roadway Design Engineer

| REVISION NO. | SHEET NO. | INDEX NO. |
|---|---|---|
| | 4 of 5 | 0304 |

| FINANCIAL PROJECT ID | STATE PROJ. NO. | SHEET NO. |
|---|---|---|
| | | |

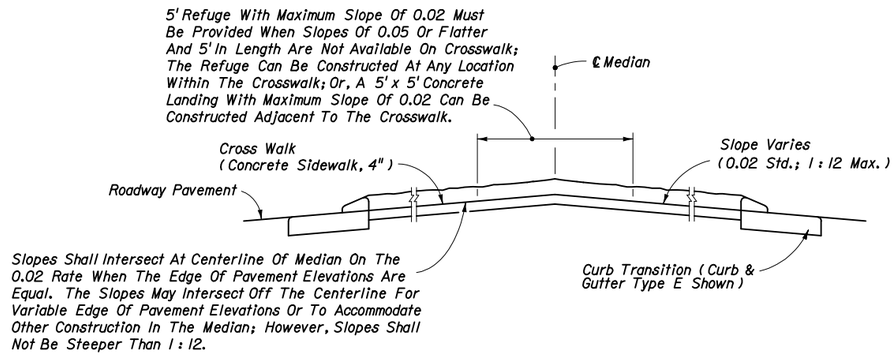


SECTION CC

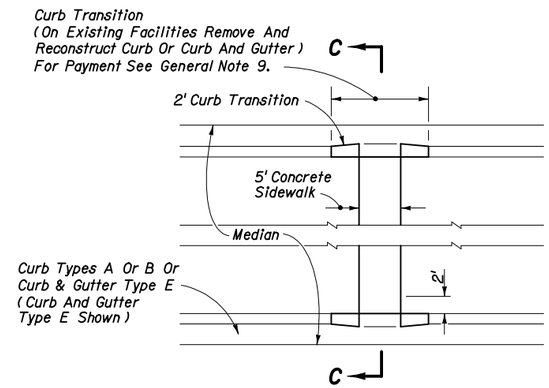


PLAN

# MEDIAN CROSSWALKS

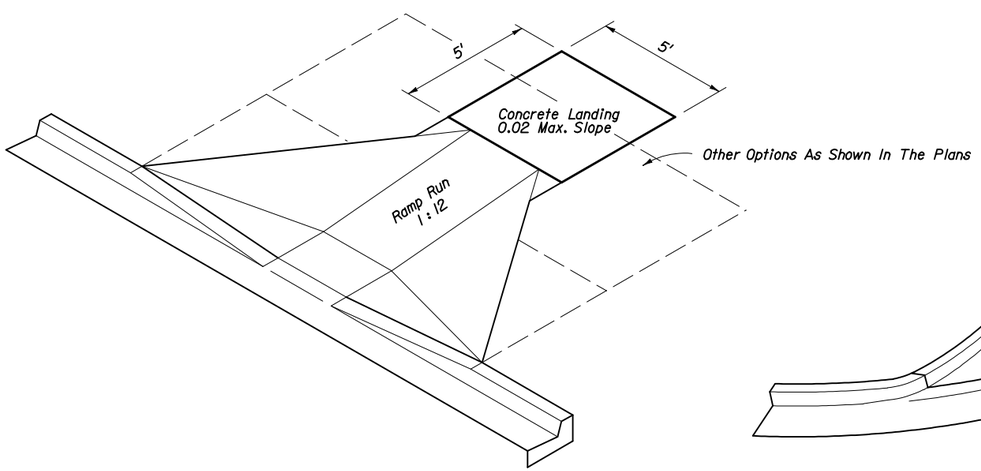


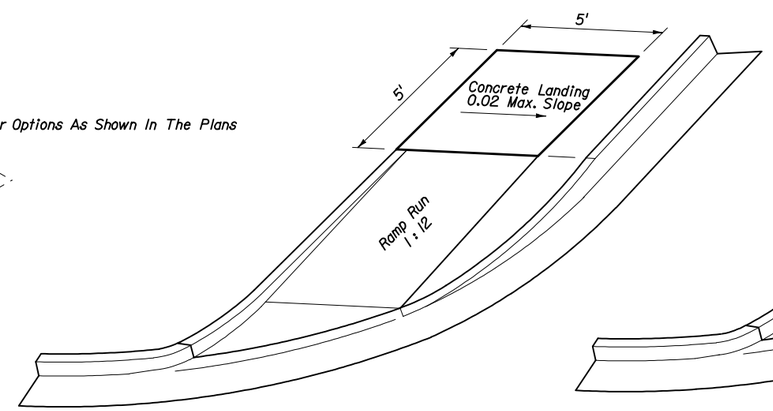


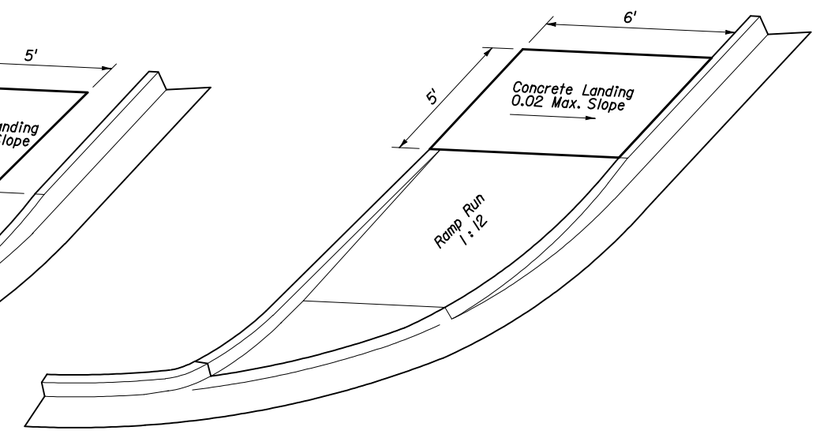


**LANDINGS FOR RAMPS WITHIN PUBLIC RIGHT OF WAY CONSTRUCTED AT LOCATIONS WHERE FUTURE SIDEWALKS ARE PROPOSED, WHERE STABLE SURFACES OTHER THAN SIDEWALKS ARE PART OF A CONTINUOUS PASSAGE OR WHERE A CURB FALLS ALONG THE CIRCULATION PATH TO PEDESTRIAN ROUTES ON ADJACENT SITES**

THE SEALED RECORD OF THIS STANDARD IS ON FILE IN THE ROADWAY DESIGN OFFICE.

INTERIM STANDARD IN ENGLISH UNITS APPLICABLE TO DESIGN STANDARDS BOOKLET PUBLISHED IN ENGLISH UNITS.

Revised: 01-30-03

STATE OF FLORIDA DEPARTMENT OF TRANSPORTATION

## PUBLIC SIDEWALK CURB RAMPS

INTERIM STANDARD

THIS SHEET REPLACES INDEX NO. 304 (SHEET 5 OF 5) OF THE DESIGN STANDARDS, BOOKLET DATED JANUARY 2002.

APPROVED BY
Roadway Design Engineer

| REVISION NO. | SHEET NO. | INDEX NO. |
|---|---|---|
| | 5 of 5 | 0304 |