| FINANCIAL PROJECT ID | STATE PROJ. NO. | SHEET NO. |
|---|---|---|
| | | |

## GENERAL NOTES

1. The J-J Hook temporary concrete barrier wall represented on this standard drawing is a proprietary design by Easi-Set Industries. Any infringement on the rights of the designer shall be the sole responsibility of the user.

2. This standard drawing is produced by the Florida Department of Transportation solely for the use by the Department and its assignees.

3. The J-J Hook barrier meets NCHRP 350 Test Level 3 criteria for longitudinal barrier. Use of the J-J Hook units shall be in accordance with the requirements of Interim Index No. 0415.

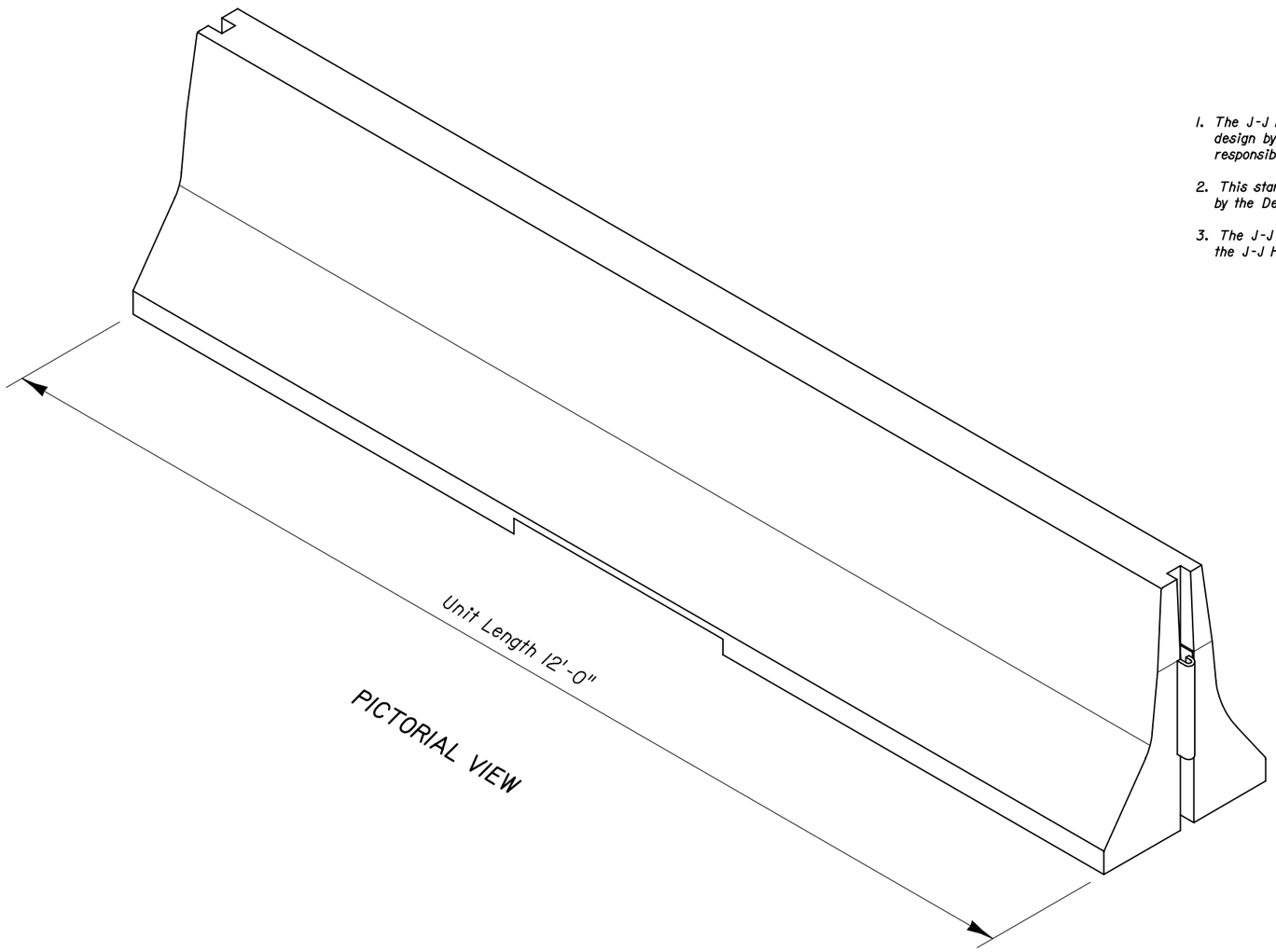


PICTORIAL VIEW

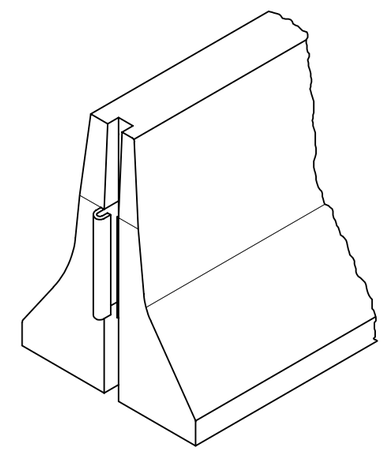

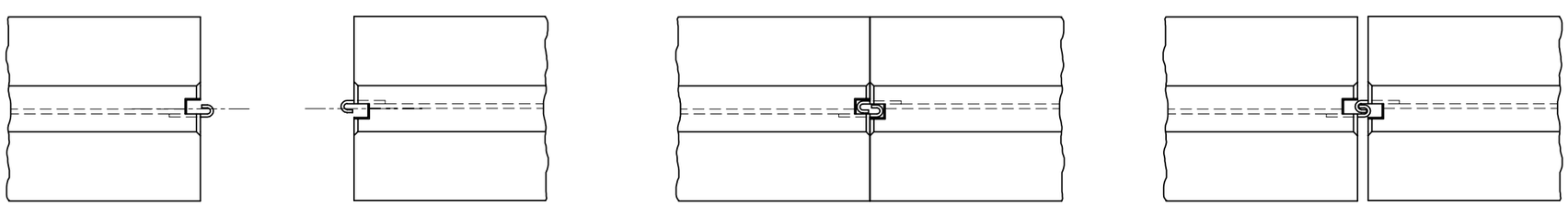

Separated

Closed

Maximum Opening

TOP VIEW

## J-J HOOK CONNECTED TEMPORARY CONCRETE BARRIER WALL

INTERIM STANDARD IN ENGLISH UNITS APPLICABLE TO DESIGN STANDARDS BOOKLET PUBLISHED IN ENGLISH UNITS.

Date: 07-01-03

STATE OF FLORIDA DEPARTMENT OF TRANSPORTATION

PROPRIETARY TEMPORARY CONCRETE BARRIER

INTERIM STANDARD

THIS INDEX IS A SUPPLEMENT TO THE DESIGN STANDARDS, BOOKLET DATED JANUARY 2002.

APPROVED BY

Roadway Design Engineer

| REVISION NO. | SHEET NO. | INDEX NO. |
|---|---|---|
| | 1 of 1 | 413 |