| FINANCIAL PROJECT ID | STATE PROJ. NO. | SHEET NO. |
|---|---|---|
| | | |

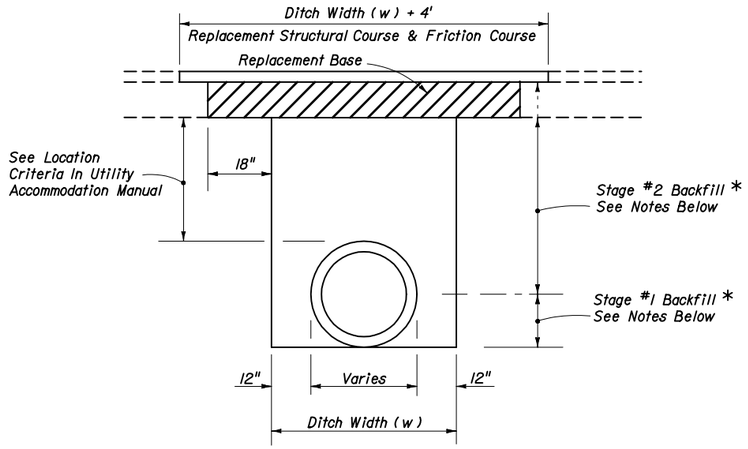


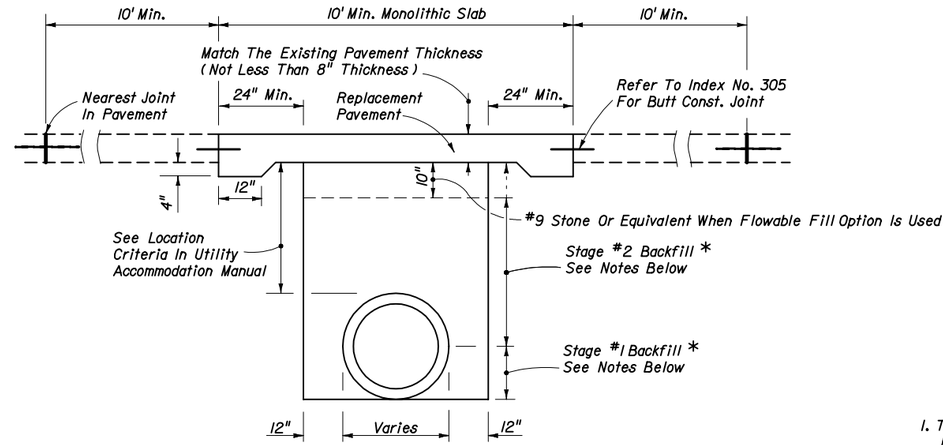


## FLEXIBLE PAVEMENT NOTES

### PAVEMENT REMOVAL AND REPLACEMENT

Pavement shall be mechanically sawed.

The replacement asphalt shall match the existing structural and friction courses for type and thickness.

The new base materials shall be either of the same type and composition as the materials removed or of equal or greater structural adequacy ( See Index No. 514 ).

### BACKFILL

COMPACTED AND STABILIZED FILL OPTION

Backfill material shall be placed in accordance with Section 125 of the Standard Specifications.

In Stage #1, construct compacted fill beneath the haunches of the pipe, using mechanical tamps suitable for this purpose. This compaction applies to the material placed beneath the haunches of the pipe and above any bedding.

In Stage #2, construct compacted fill along the sides of the pipe and up to the bottom of the base, with the upper 12" receiving Type B Stabilization. In lieu of Type B Stabilization, the Contractor may construct using Optional Base Group 3.

* FLOWABLE FILL OPTION

If compaction can not be achieved, through normal mechanical methods then flowable fill may be used.

Flowable fill is to be placed in accordance with Section 121 of the Specifications, as approved by the Engineer.

Do not allow the utility being installed to float. If a method is provided to prevent flotation from occurring, Stages #1 and #2 can be combined, if approved by the Engineer.

In Stage #1, place flowable fill midway up on both sides of the utility. Allow to harden before placing Stage #2.

In Stage #2, place flowable fill to the bottom of the existing base course.

## RIGID PAVEMENT NOTES

### PAVEMENT REMOVAL AND REPLACEMENT

High early strength cement concrete ( 3000 psi ) meeting the requirements of Standard Specification 346 shall be used for rigid pavement replacement.

Pavement shall be mechanically sawed and restored to conform with existing pavement joints within 12 hours. ( See Index No. 305 )

### GRANULAR BACKFILL

Any edgedrain system that is removed shall be replaced with the same type materials. Any edgedrain system that is damaged shall be repaired with methods approved by the Engineer.

Fill material shall be placed in accordance with the Standard Specifications. Fill material shall be special select soil in accordance with Index No. 505.

In Stage #1, construct compacted fill beneath the haunches of the pipe, using mechanical tamps suitable for this purpose. This compaction applies to the material placed beneath the haunches of the pipe and above any bedding.

In Stage #2, construct fill along the sides of the pipe and up to the bottom of replacement pavement.

* FLOWABLE FILL OPTION

If mechanical compaction can not be achieved through normal mechanical methods then flowable fill may be used.

Flowable fill is to be placed in accordance with Section 121 of the Specifications, as approved by the Engineer.

Do not allow the utility being installed to float. If a method is provided to prevent flotation from occurring, Stages #1 and #2 can be combined, if approved by the Engineer.

In Stage #1, place flowable fill midway up on both sides of the utility. Allow to harden before placing Stage #2.

In Stage #2, place flowable fill to the bottom of the stone layer.

## GENERAL NOTES

1. The details provided in this standard index apply to cases in which jack and bore or directional boring methods are not required by the Engineer.
2. Flowable fill shall not be placed directly over loose, or high plastic, or muck material ( see Index 505 ) which will cause settlement due to fill weight. Where highly compressable material exists, the amount, shape and depth of flowable fill must be engineered to prevent pavement settlement.
3. These details do not apply to utility cuts longitudinal to the centerline of the roadway which may require the additional use of geotextiles, special bedding and backfill, or other special requirements.
4. Method of construction must be approved by the Engineer.
5. Some pipe may require special granular backfill up to 6" above top of pipe. Geotextiles may be required to encapsulate the special granular material.
6. Where asphalt concrete overlays exist over full slab concrete pavement, the replacement pavement shall have an overlay constructed over the replacement slab. The overlay shall match the existing asphalt pavement thickness. The replacement friction course shall match the existing friction course, except structural course may be used in lieu of dense graded friction course.

   Existing broken and seated pavements shall be treated as flexible pavements.
7. All shoulder pavement, curb, curb and gutter, and their substructure disturbed by utility trench cut construction shall be restored in kind.
8. The use of flowable fill to reduce the time traffic is taken off a facility is acceptable but must have prior approval by the Engineer. Flowable fill use is allowed only when properly engineered for pavement crossings, whether straight or diagonal, and shall not be installed for significant depths or lengths. The maximum length shall be fifty ( 50 ) feet and a maximum depth of six ( 6 ) feet unless supported by an engineering document prepared by a registered professional engineer that specializes in soils engineering. The engineering document shall address the evaluation of local groundwater flow interruption and settlement potential.
9. Excavatable flowable fill is to be used when the flowable fill option is selected.
10. When approved by the Engineer, in lieu of the pavement and base, non-excavatable flowable fill may be used for manhole stabilization and ring and cover adjustments. Excavatable flowable fill shall not be used within the limits of the pavement and base.

FLEXIBLE PAVEMENT CUT

RIGID PAVEMENT CUT

INTERIM STANDARD IN ENGLISH UNITS APPLICABLE TO DESIGN STANDARDS BOOKLET PUBLISHED IN ENGLISH UNITS.

# TRENCH CUTS AND RESTORATIONS ACROSS ROADWAYS

Date: 07-01-03

STATE OF FLORIDA DEPARTMENT OF TRANSPORTATION

Miscellaneous Utility Details

INTERIM STANDARD

THIS INDEX REPLACES INDEX NO. 307 OF THE DESIGN STANDARDS, BOOKLET DATED JANUARY 2002.

APPROVED BY Kenneth C. Walden
Roadway Design Engineer

| REVISION NO. | SHEET NO. | INDEX NO. |
|---|---|---|
| | 1 of 3 | 0307 |

| FINANCIAL PROJECT ID | STATE PROJ. NO. | SHEET NO. |
|---|---|---|
| | | |

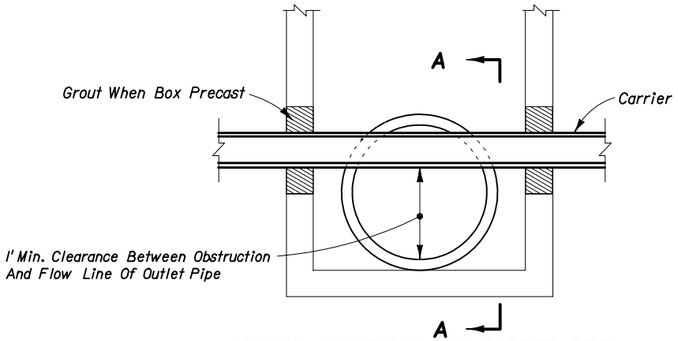


SECTION LONGITUDINAL TO CARRIER PIPE

No Joints Allowed Within Structure

(Non-Pressure Or Non-Fluid Carrier Installations)

## UTILITY CONFLICT CONDITION I

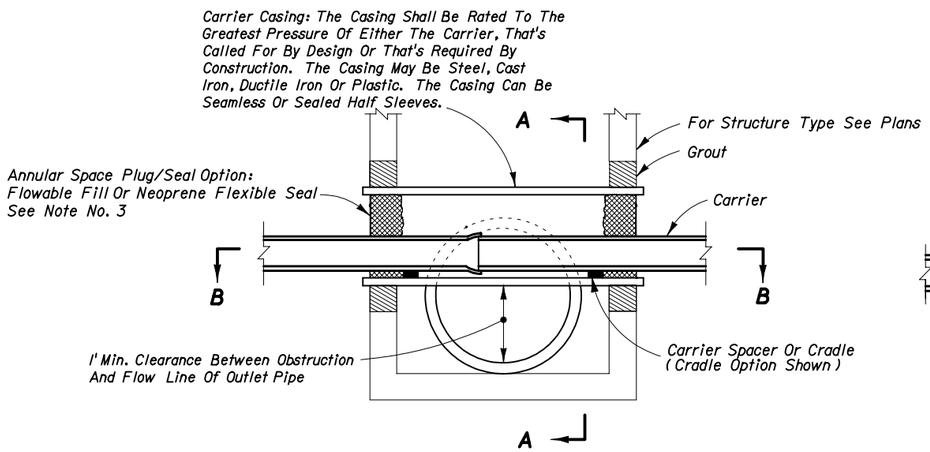


SECTION LONGITUDINAL TO CARRIER PIPE

(Pressure Or Fluid Carrier Installations)

## UTILITY CONFLICT CONDITION II

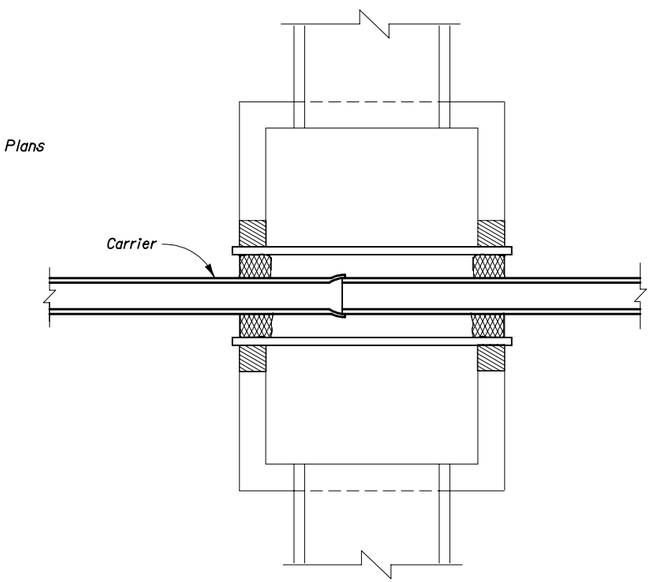


SECTION BB

## NOTES FOR UTILITY CONFLICT PIPE

1. These details are for construction field expediency to resolve utility conflicts that cannot be remedied by relocation. For conflicts determined during design, use the construction shop drawings for structure details.

2. Concrete used in conflict structures shall be as specified in ASTM C478. 4000 psi may be used in lieu of Class I concrete.

3. Maximum opening for pipe shall be the pipe OD plus 6". Mortar used to seal the pipe into the opening will be of such mix that shrinkage will not cause leakage into or out of the structure.

4. If the conflict structure is round or there are multiple inlet or outlet pipes, then the wall section should be reviewed for strength.

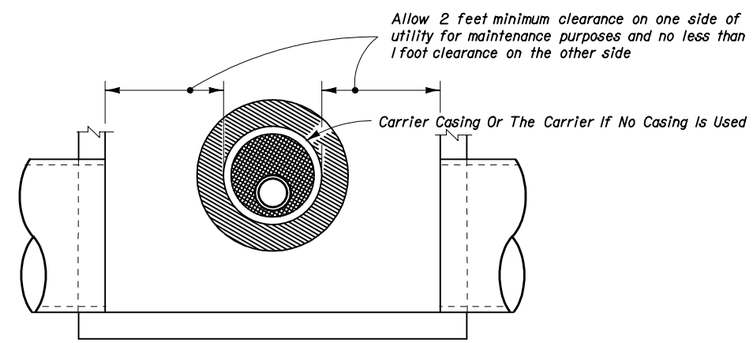


DESIGNERS NOTE

"Sumped" Conflict Manholes Shall Not Be Used Unless The System Is Hydraulically Designed To Account For The Headloss Generated If The Sump Is Completely Blocked

SECTION AA

INTERIM STANDARD IN ENGLISH UNITS
APPLICABLE TO DESIGN STANDARDS
BOOKLET PUBLISHED IN ENGLISH UNITS.

# UTILITY CONFLICT PIPES THRU STORM SEWER STRUCTURES

Date: 07-01-03

STATE OF FLORIDA DEPARTMENT OF TRANSPORTATION

Miscellaneous Utility Details

INTERIM STANDARD

THIS INDEX REPLACES INDEX NO. 307 OF THE DESIGN STANDARDS, BOOKLET DATED JANUARY 2002.

APPROVED BY Kenneth C. Wheldon
Roadway Design Engineer

| REVISION NO. | SHEET NO. | INDEX NO. |
|---|---|---|
| | 2 of 3 | 0307 |

| FINANCIAL PROJECT ID | STATE PROJ. NO. | SHEET NO. |
|---|---|---|
| | | |

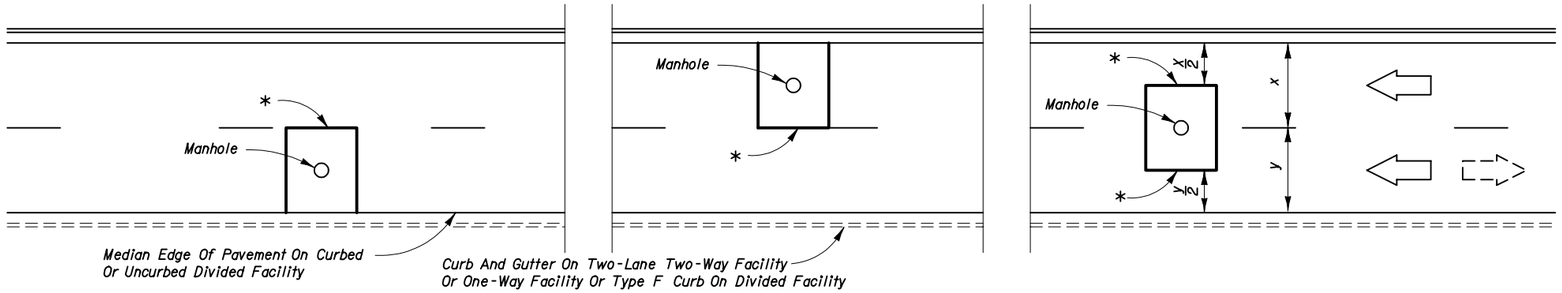


* Longitudinal Cut Lines For Both Curbed And Uncurbed Facilities Must Coincide With A Regular Seam Or Mid-Lane Point In Order To Be Outside The Wheel Path

## PLAN VIEW
## FOR TWO OR MORE LANES ( TWO LANES SHOWN )

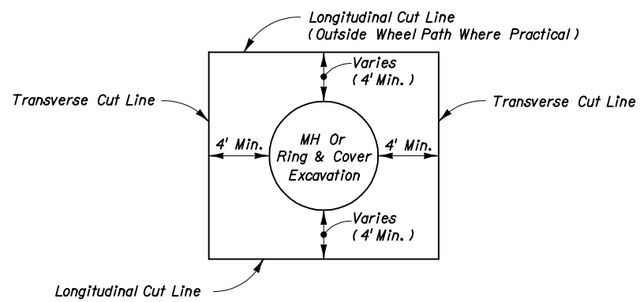


## PARTIAL CUTS FOR RING AND COVER ADJUSTMENTS

### NOTES

1. No irregular seams are permitted. All seams must be clean sawed.
2. Pavement cut seams for underground utility structures in rigid pavement are the same longitudinally, but the transverse seams shall extend to the neareast existing joint.
3. See Sheet 1 for replacement pavement.

INTERIM STANDARD IN ENGLISH UNITS APPLICABLE TO DESIGN STANDARDS BOOKLET PUBLISHED IN ENGLISH UNITS.

# NON-TRENCH PAVEMENT CUTS FOR UNDERGROUND UTILITY STRUCTURES IN PAVEMENT

Date: 07-01-03

STATE OF FLORIDA DEPARTMENT OF TRANSPORTATION

Miscellaneous Utility Details

INTERIM STANDARD

THIS INDEX REPLACES INDEX NO. 307 OF THE DESIGN STANDARDS, BOOKLET DATED JANUARY 2002.

APPROVED BY Kenneth C. Weldon
Roadway Design Engineer

| REVISION NO. | SHEET NO. | INDEX NO. |
|---|---|---|
| | 3 of 3 | 0307 |