| FINANCIAL PROJECT ID | STATE PROJ. NO. | SHEET NO. |
|---|---|---|
| | | |

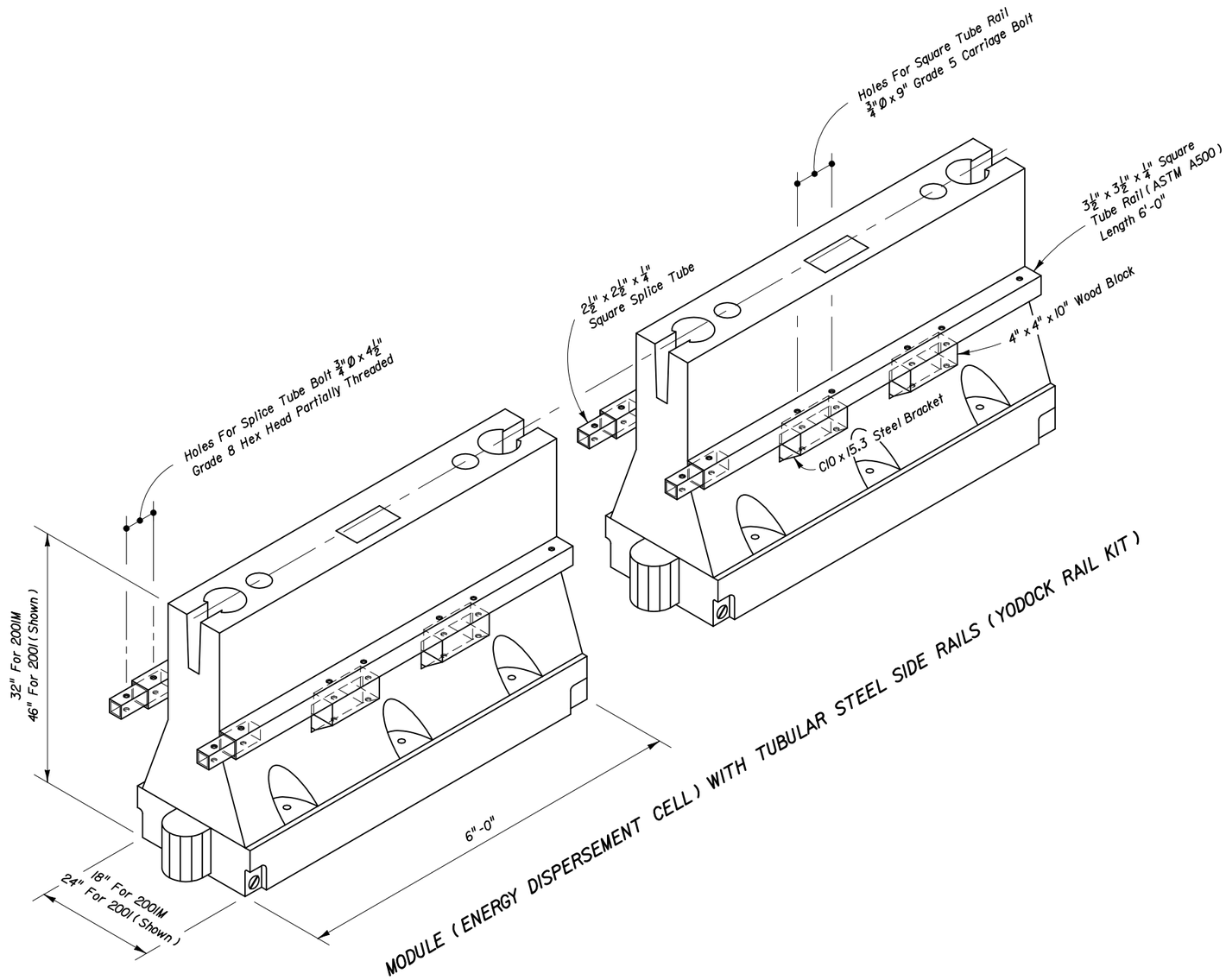


## GENERAL NOTES FOR THE YODOCK BARRIER

1. The longitudinal traffic barrier systems presented on this standard drawing (index) and the label YODOCK are proprietary designs by THE YODOCK WALL COMPANY and are marketed under the trade name YODOCK BARRIER.

2. This index provides general schematics and information necessary to field identify the water filled polyethylene segmental barrier module (Energy Dispersement Cell) and the module frame and basic connections, but does not identify the incorporation of the modules and frame connections into a whole system. Any use of the YODOCK Barrier must be in accordance with the details on the plans, or by shop drawing approval or by the Engineer in absence of plan detail.

3. The Model 2001 barrier system is approved for use on highways with all design speeds. The Model 2001M is limited to use on highways with a design speed of 45 mph and less.

4. The YODOCK longitudinal traffic barrier system can by used only in a stand alone system. i.e., not connected to other types of barrier systems.

5. The YODOCK longitudinal traffic barrier system must have a minimum of eight (8) longitudinally connected modules in advance of the length of need; in no case can the longitudinal run of barrier be less than 25 modules.

   The approach end of the YODOCK system must either extend to the outer limit of the clear zone; be shielded by a crash cushion; or, begin behind but not connected to another barrier or shielding feature.

6. The YODOCK longitudinal barrier system must be placed on a cross slope not exceeding 1:10, and located to provide a deflection distance between the system and hazards in accordance with the table below.

**BARRIER WITH TUBULAR STEEL SIDE RAILS**
ESTIMATED BARRIER DEFLECTIONS (FEET)

| Vehicle Speed (mph) | Vehicle Impact Angle (Degrees) | | | | |
|---|---|---|---|---|---|
| | 25° | 20° | 15° | 10° | 5° |
| YODOCK 2001M BARRIER | | | | | |
| 20 | 3.0 | 2.0 | 1.0 | 0.5 | 0.5 |
| 25 | 4.5 | 3.0 | 1.5 | 1.0 | 0.5 |
| 35 | 8.5 | 5.5 | 3.0 | 1.5 | 0.5 |
| 40 | 11.0 | 7.5 | 4.0 | 2.0 | 0.5 |
| 45 | 14.0 | 9.0 | 5.5 | 2.5 | 0.5 |
| YODOCK 2001 BARRIER | | | | | |
| 45 | 8.0 | 5.0 | 3.0 | 1.5 | 0.5 |
| 50 | 9.5 | 6.0 | 3.5 | 1.5 | 0.5 |
| 55 | 11.0 | 7.5 | 4.5 | 2.0 | 0.5 |
| 60 | 14.0 | 9.0 | 5.0 | 2.5 | 0.5 |

7. The YODOCK longitudinal traffic barrier system shall be paid for under the contract unit price for Barrier (Temporary) (Water Filled), LF, and shall be full compensation for furnishing and installing YODOCK barrier in accordance with this index, with the plans and with the manufacturer's detailed drawings, procedures and specifications. Any crashworthy end terminal, crash cushion or other shielding required for use of the YODOCK barrier will not be included in the contract unit price for the barrier.

## DESIGN NOTES FOR THE YODOCK BARRIER

1. Systems included in any maintenance of traffic plan will require detailed location and placement information.

2. Currently the Department does not recognize other proprietary items as being equally suitable alternatives to the YODOCK barrier, and until such alternatives are available, the YODOCK barrier need not be bid against other proprietary items.

# YODOCK LONGITUDINAL TRAFFIC BARRIER

INTERIM STANDARD IN ENGLISH UNITS APPLICABLE TO DESIGN STANDARDS BOOKLET PUBLISHED IN ENGLISH UNITS.

Date: 3-13-03

STATE OF FLORIDA DEPARTMENT OF TRANSPORTATION

## TEMPORARY WATER FILLED BARRIERS

INTERIM STANDARD

THIS SHEET IS A SUPPLEMENT TO INDEX NO. 416 OF THE DESIGN STANDARDS, BOOKLET DATED JANUARY 2002.

APPROVED BY
Roadway Design Engineer

| REVISION NO. | SHEET NO. | INDEX NO. |
|---|---|---|
| | 1 of 1 | 0416 |