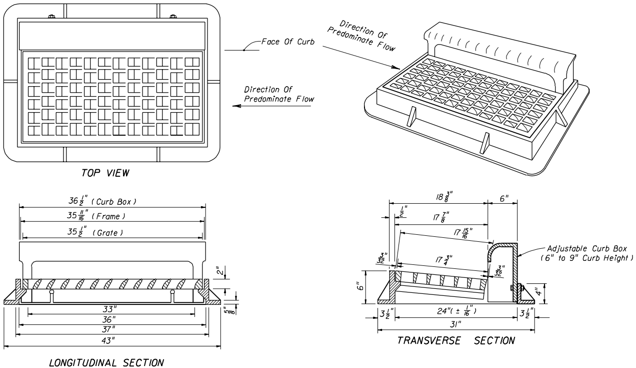

FRAME AND GRATE

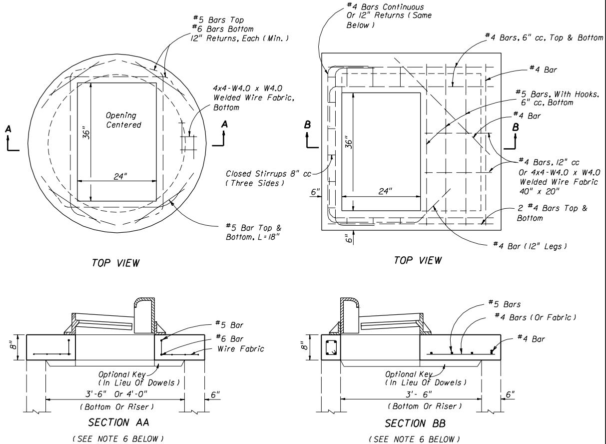

TOP SLABS

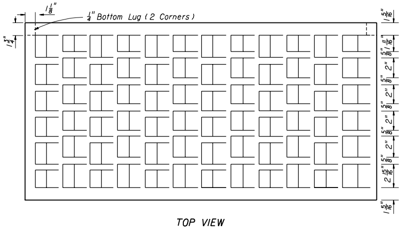

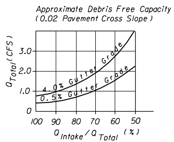

EFFICIENCY CURVE

GENERAL NOTES

1. This inlet is primarily intended for locations with light to moderate flows where right of way does not permit the use of throated Curb Inlets Types 1 through 6. The typical application is on curb returns to city streets. The inlet grate is suitable for pedestrian and bicycle traffic.
2. This inlet to be located in vertical faced curbs such as Curb and Gutter Type F. Grate shall be oriented with vanes directed toward predominate flow. Inlet to be located outside pedestrian crosswalk where practical.
3. For structure bottoms see Index No. 200. For supplemental details see Index No. 201.
4. All steel in slab tops shall have 1 1/4" minimum cover unless otherwise shown. Tops shall be either cast-in-place or precast concrete.
5. For Alternate B applications, top slab openings shall be placed such that 2 edges of inlet frame will be located directly above bottom wall or riser wall.
6. When used on a structure with dimensions larger than those detailed above and risers are not applied, the top slab shall be constructed using Index 200 with the slab opening adjusted to 24" x 36". The "Special Top Slab" on Index 200 is not permitted.
7. Frame may be adjusted with one to six courses of brick.
8. Inlet and grate detail shown is Neenah R-3067-L. Vaned grates with approximately equal openings will be permitted that satisfy AASHTO H-20 loading. Inlet and grate shall be Class 30 castings in accordance with ASTM A48M. Grates shall be reversible, right or left.

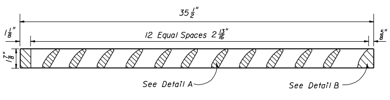

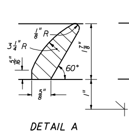

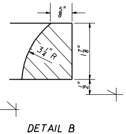

GRATE DETAIL

STATE OF FLORIDA DEPARTMENT OF TRANSPORTATION
ROAD DESIGN

CURB INLET TOP TYPE 9

	Names	Dates
Designed By	EGR	
Drawn By	HSD	01/81
Checked By	JVG	01/81

Approved By: State Drainage Engineer

Revision	Sheet No.	Index No.
00	1 of 1	214

$$$$$$SYTIME$$$$$$