BILL OF REINFORCING STEEL

END SEGMENT
NO REQUIRED = 24

BAR	SIZE	# REQ'D	LENGTH
5A01	5	4	26'-0"
5B02	5	26	8'-8"
5B03	5	13	17'-7"
5B03A	5	2	15'-5"
5B04	5	12	7'-9"
8B05	8	2	26'-0"
5B06	5	18	12'-8"
7B07	7	1	23'-2"
3D01	3	23	5'-5"
3D01A	3	23	3'-1"
3D02	3	13	5'-11"
3D02A	3	8	6'-8"
4K01	4	246	8'-3"
4A04	4	6	7'-0"
4K02	4	6	7'-7"
5L01	5	6	27'-0"
4L02	4	6	8'-0"
4M01	4	119	7'-0"
6U01	6	4	14'-8"

PIER SEGMENT
NO REQUIRED = 24

BAR	SIZE	# REQ'D	LENGTH
5A01	5	12	26'-0"
5A05	5	4	60'-0"
8A02	8	6	60'-0"
4A03A	4	2	108'-8"
4A03B	4	2	92'-0"
4A03C	4	2	64'-6"
4A03D	4	2	31'-6"
3D03	3	22	7'-0" **
3D04	3	22	7'-1" **
4D05	4	42	9'-8" **
4D06	4	37	9'-9" **
4D07	4	3	12'-0"
4K01	4	410	8'-3"
4K03	4	320	4'-2" **
4K04	4	26	5'-7"
4A04	4	12	7'-0"
5L01	5	8	27'-0"
4L02	4	12	8'-0"
4M01	4	103	7'-0"
6U01	6	8	14'-8"
#5 Embed	5	18	VARIES

DROP IN SEGMENT
NO REQUIRED = 12

BAR	SIZE	# REQ'D	LENGTH
5A01	5	4	26'-0"
3D01	3	46	5'-5"
3D01A	3	46	3'-1"
4K01	4	288	8'-3"
4A04	4	12	7'-0"
5L01	5	12	27'-0"
4L02	4	12	8'-0"
4M01	4	121	7'-0"
6U01	6	8	14'-8"

BENDING DIAGRAMS

NOTE: ALL DIMENSIONS ARE OUT TO OUT

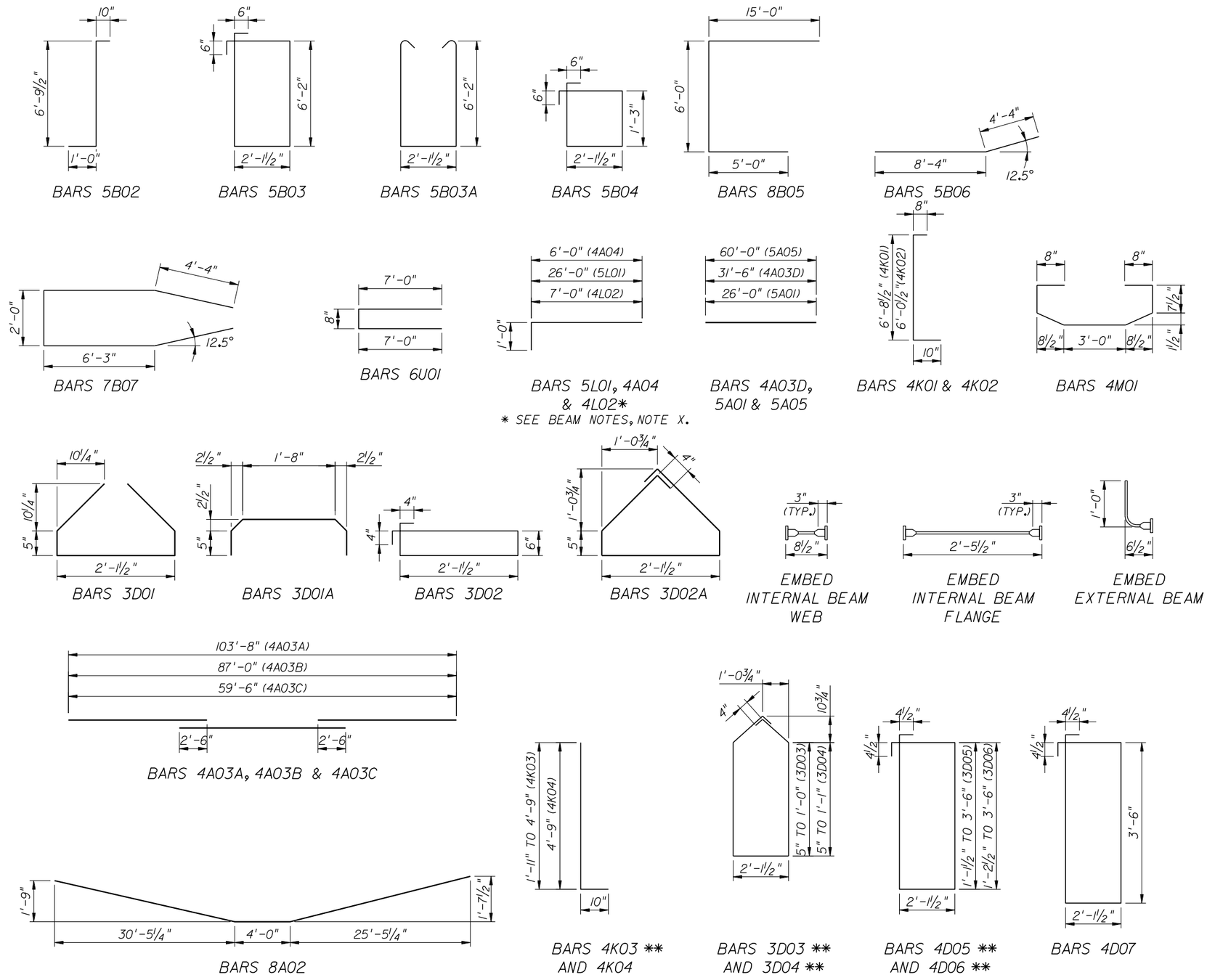

** THE LENGTH GIVEN IN BILL OF REINFORCING STEEL IS AN AVERAGE.

BRIDGE NO. XXXXXX

REVISIONS

DATE	BY	DESCRIPTION	DATE	BY	DESCRIPTION

STRUCTURES DESIGN OFFICE
CENTRAL OFFICE
605 Suwannee Street, MS 33
Tallahassee, Florida 32399-0450

DRAWN BY: XXX MM-YY
CHECKED BY: XXX MM-YY
DESIGNED BY: XXX MM-YY
CHECKED BY: XXX MM-YY

STATE OF FLORIDA
DEPARTMENT OF TRANSPORTATION

ROAD NO.	COUNTY	FINANCIAL PROJECT ID

SHEET TITLE: BEAM REINFORCING DETAILS

PROJECT NAME: SUPERSTRUCTURE DETAILS EXAMPLE 6
SPLICED GIRDER BEAM REINFORCING DETAILS

REF. DWG. NO.

SHEET NO.