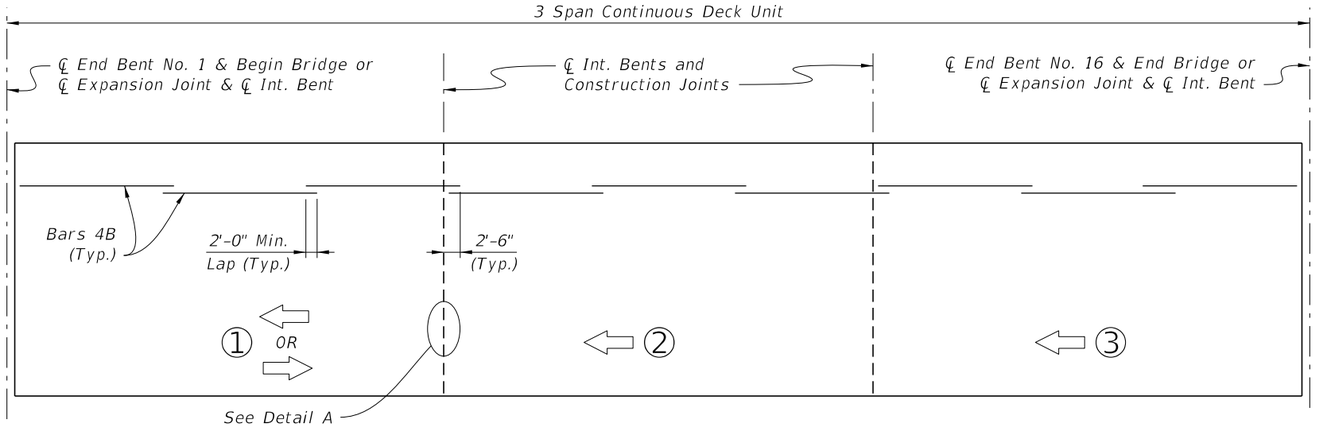

DECK CASTING SEQUENCE - MULTIPLE POURS

(SPANS 1 THRU 3 SHOWN; SPANS 4 THRU 15 SIMILAR)

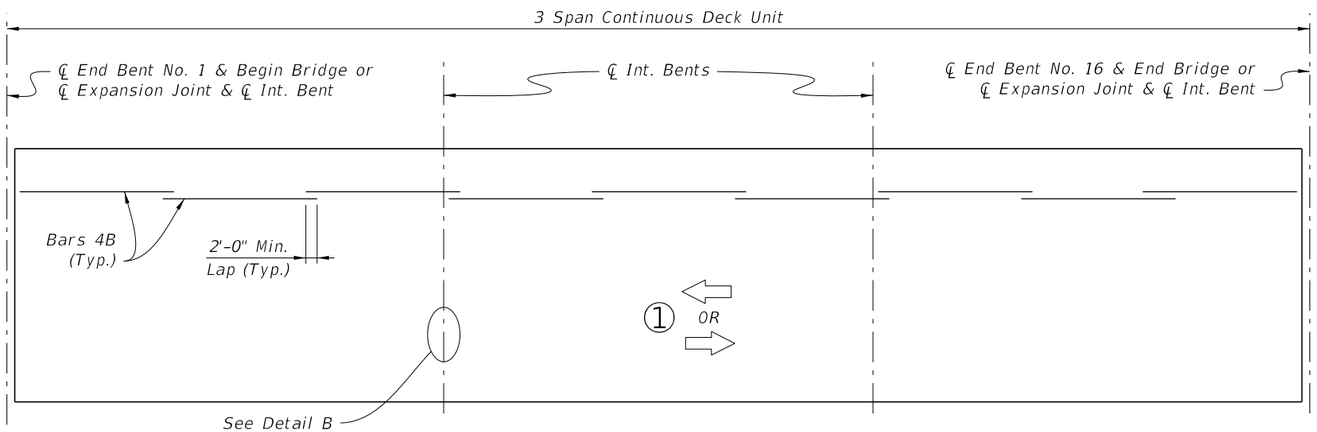

DECK CASTING SEQUENCE - SINGLE POUR

(SPANS 1 THRU 3 SHOWN; SPANS 4 THRU 15 SIMILAR)

LEGEND:

③ = Pour Number

⇦ = Direction of Pour

NOTES:

1. At the Contractor's option, either Deck Casting Sequence may be used.
2. A minimum of 72 hours is required between adjacent pours in a given continuous deck unit.
3. Fill Tooled V-groove with Rapid Cure Silicone or Hot Poured Seal. Groove shall be clean and free of grease and debris before filling.

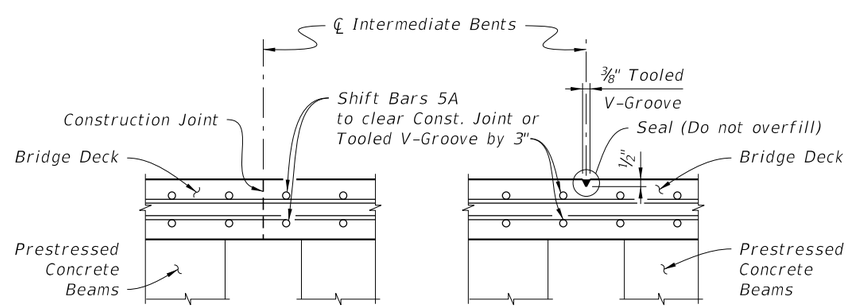

DETAIL A DETAIL B

BRIDGE NO. XXXXXX

REVISIONS					
DATE	BY	DESCRIPTION	DATE	BY	DESCRIPTION

STRUCTURES DESIGN OFFICE
CENTRAL OFFICE
605 SUWANNEE STREET, MS 33
TALLAHASSEE, FLORIDA 32399-0450
PE NAME
PE NUMBER

DRAWN BY:
CHECKED BY:
DESIGNED BY:
CHECKED BY:

STATE OF FLORIDA
DEPARTMENT OF TRANSPORTATION

ROAD NO.	COUNTY	FINANCIAL PROJECT ID

SHEET TITLE: DECK CASTING SEQUENCE
SIMPLE SPAN PRESTRESSED CONCRETE BEAMS

PROJECT NAME: SUPERSTRUCTURE DETAILS EXAMPLE 8
SHEET 1 OF 1

REF. DWG. NO.

SHEET NO.