PERMANENT RETAINING WALL SYSTEM DATA TABLES

GEOTECHNICAL INFORMATION						Table Date 1-01-11
						Firm Clayey Fine Sand
Depth Below Existing Ground Line (ft.)	Wall No. 1					
	Wall No. 2					
Effective Unit Weight (pcf)						
Cohesion (psf)						
Internal Friction Angle						

NOTE:
If the unit weight and/or internal friction angle of the fill proposed by the Contractor differs from that shown above, the Project Engineer will contact both the District Geotechnical Engineer and the Wall Designer for a possible redesign.

RETAINING WALL VARIABLES				Table Date 1-01-11
Wall No.	Wall Settlement			
	Long Term Settlement (in.)	Short Term Settlement (in.)	Differential Settlement	
			Longitudinal (%) (ft./100ft.)	Transverse (in.)
1				
2				

NOTE:
Design walls for the settlements noted in the table.
Long term settlement is measured from the end of wall fill placement.
Transverse differential settlement is measured from the face of wall to the end of the soil reinforcement.

SOIL REINFORCEMENT LENGTHS FOR EXTERNAL STABILITY												Table Date 1-01-11
Wall No. 1	Wall Height (ft.)											
	Reinforcement Length (ft.)											
	Factored Bearing Resistance (psf)											
Wall No. 2	Wall Height (ft.)											
	Reinforcement Length (ft.)											
	Factored Bearing Resistance (psf)											

NOTES:
1. The reinforcement strap lengths shown above are the minimum lengths required for external stability. The reinforcement lengths used in the construction of the retaining walls will be the longer of that required for external or internal stability (determined by proprietary wall companies).
2. The Factored Bearing Resistances shown above are the critical (lowest) values from all the load cases analyzed using LRFD methodology.

BRIDGE NO. XXXXXX

REVISIONS					
DATE	BY	DESCRIPTION	DATE	BY	DESCRIPTION

STRUCTURES DESIGN OFFICE
CENTRAL OFFICE
605 Suwannee Street, MS 33
Tallahassee, Florida 32399-0450

DRAWN BY: XXX MM-YY
CHECKED BY: XXX MM-YY
DESIGNED BY: XXX MM-YY
CHECKED BY: XXX MM-YY

STATE OF FLORIDA
DEPARTMENT OF TRANSPORTATION

ROAD NO.	COUNTY	FINANCIAL PROJECT ID

SHEET TITLE: MSE WALLS (SHEET 1 OF 5) WALL DATA TABLES

PROJECT NAME: MSE WALLS EXAMPLE 1 PERMANENT MSE WALLS

REF. DWG. NO.

SHEET NO.

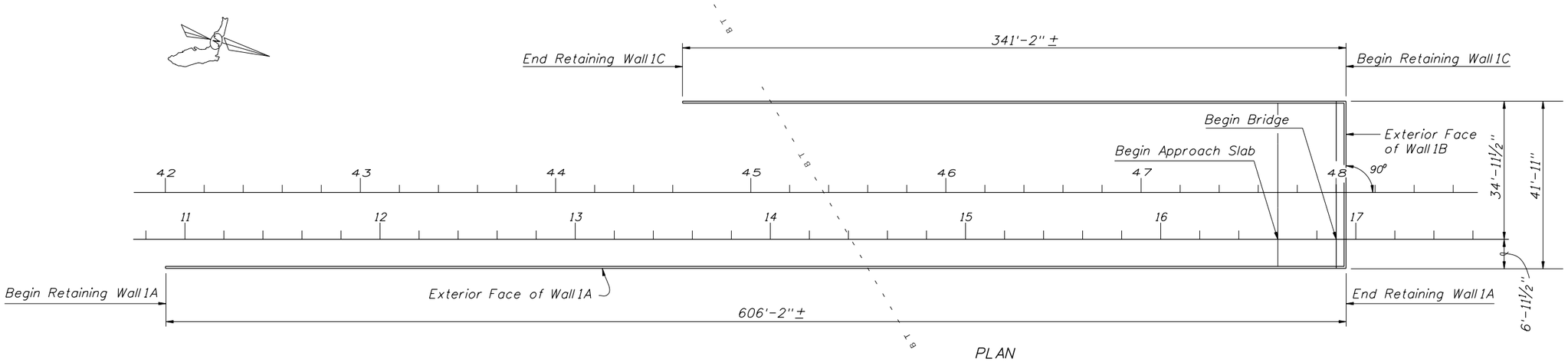

BRIDGE NO. XXXXXX

REVISIONS					
DATE	BY	DESCRIPTION	DATE	BY	DESCRIPTION

STRUCTURES DESIGN OFFICE
CENTRAL OFFICE
605 Suwannee Street, MS 33
Tallahassee, Florida 32399-0450

DRAWN BY: XXX MM-YY
CHECKED BY: XXX MM-YY
DESIGNED BY: XXX MM-YY
CHECKED BY: XXX MM-YY

STATE OF FLORIDA
DEPARTMENT OF TRANSPORTATION

ROAD NO.	COUNTY	FINANCIAL PROJECT ID

SHEET TITLE: MSE WALLS (SHEET 2 OF 5)
WALL CONTROL DRAWINGS

PROJECT NAME: MSE WALLS EXAMPLE 1
PERMANENT MSE WALLS

REF. DWG. NO.

SHEET NO.

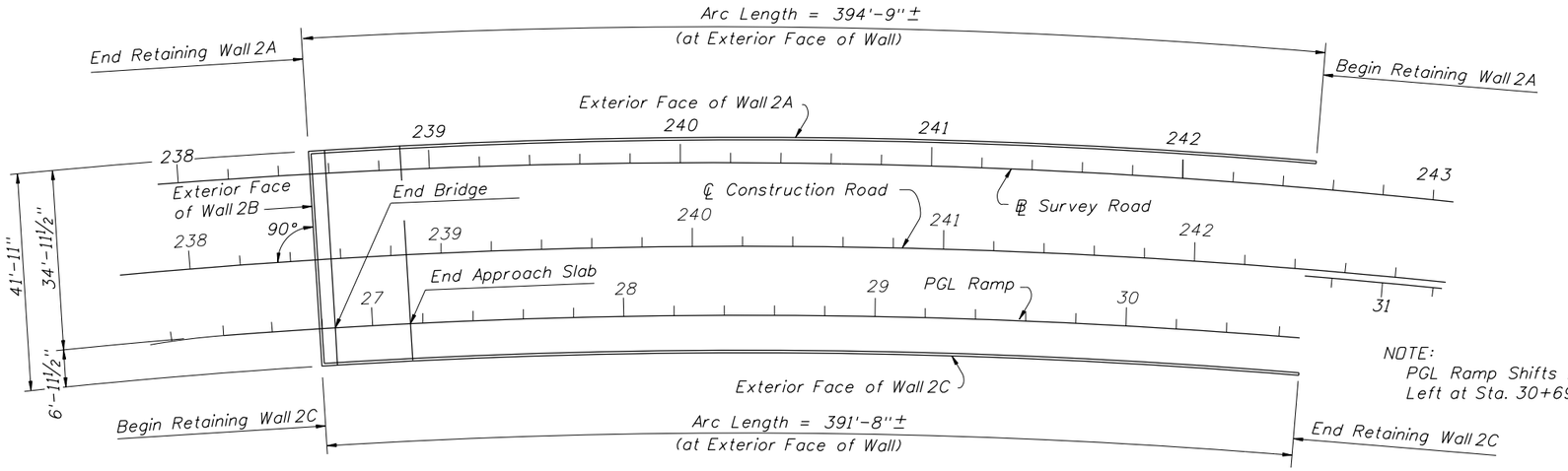

PLAN

NOTE:
PGL Ramp Shifts 12'-0"
Left at Sta. 30+69.23

HORIZONTAL CURVE DATA

PI Sta. = 28+50.87
Δ = 4°28'13" Rt.
D = 1°02'54"
T = 210.23'
L = 420.25'
R = 5,386.25'
PCC Sta. = 26+40.64
PT Sta. = 30+60.89

BRIDGE NO. XXXXXX

REVISIONS					
DATE	BY	DESCRIPTION	DATE	BY	DESCRIPTION

STRUCTURES DESIGN OFFICE
CENTRAL OFFICE
605 Suwannee Street, MS 33
Tallahassee, Florida 32399-0450

DRAWN BY: XXX MM-YY
CHECKED BY: XXX MM-YY
DESIGNED BY: XXX MM-YY
CHECKED BY: XXX MM-YY

STATE OF FLORIDA
DEPARTMENT OF TRANSPORTATION

ROAD NO.	COUNTY	FINANCIAL PROJECT ID

SHEET TITLE: MSE WALLS (SHEET 3 OF 5)
WALL CONTROL DRAWINGS

PROJECT NAME: MSE WALLS EXAMPLE 1
PERMANENT MSE WALLS

REF. DWG. NO.

SHEET NO.

BRIDGE NO. XXXXXX

REVISIONS					
DATE	BY	DESCRIPTION	DATE	BY	DESCRIPTION

STRUCTURES DESIGN OFFICE

CENTRAL OFFICE
605 Suwannee Street, MS 33
Tallahassee, Florida 32399-0450

DRAWN BY: XXX MM-YY
CHECKED BY: XXX MM-YY
DESIGNED BY: XXX MM-YY
CHECKED BY: XXX MM-YY

STATE OF FLORIDA
DEPARTMENT OF TRANSPORTATION

ROAD NO.	COUNTY	FINANCIAL PROJECT ID

SHEET TITLE:
MSE WALLS (SHEET 4 OF 5)
WALL CONTROL DRAWINGS

PROJECT NAME:
MSE WALLS EXAMPLE 1
PERMANENT MSE WALLS

REF. DWG. NO.

SHEET NO.

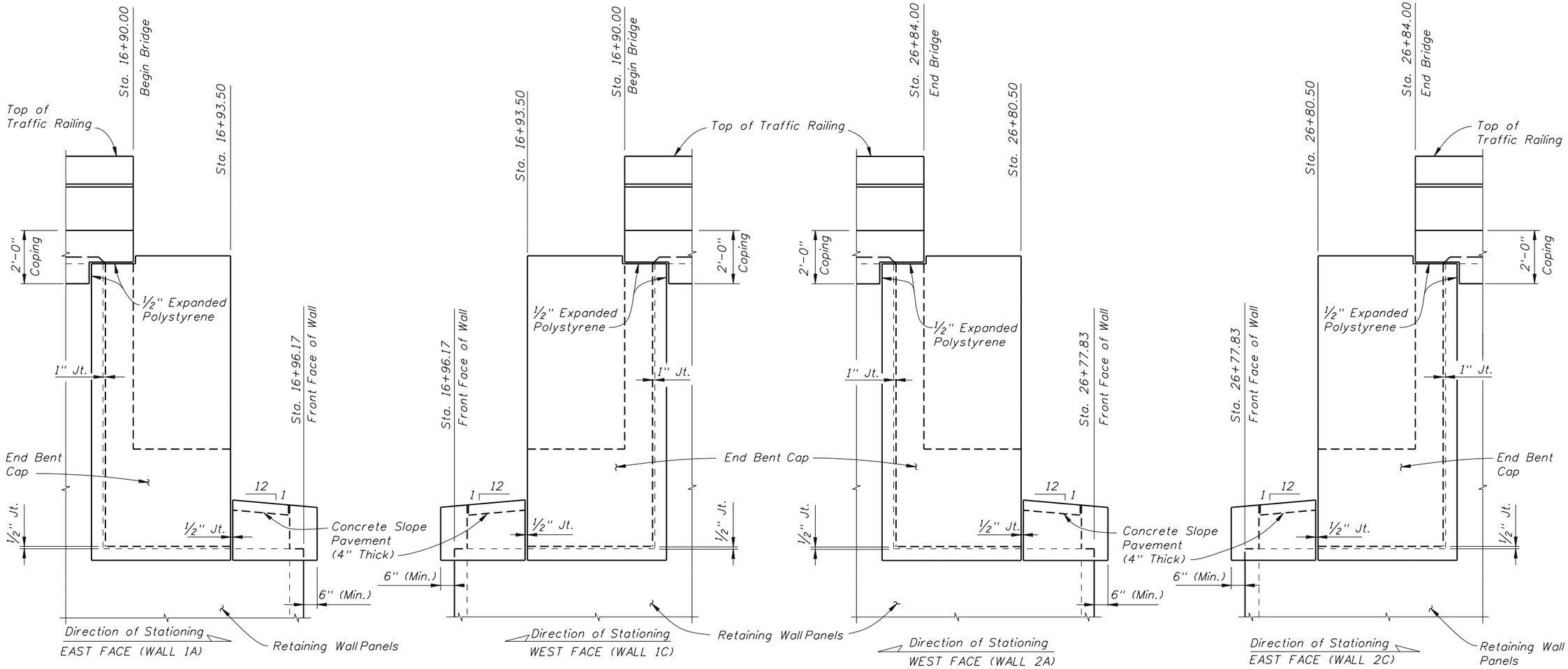

END BENT NO. 1

END BENT NO. 7

NOTE:
½" and 1" Joints to be Preformed Joint Filler, unless otherwise shown.

BRIDGE NO. XXXXXX

REVISIONS					
DATE	BY	DESCRIPTION	DATE	BY	DESCRIPTION

STRUCTURES DESIGN OFFICE
CENTRAL OFFICE
605 Suwannee Street, MS 33
Tallahassee, Florida 32399-0450

DRAWN BY: XXX MM-YY
CHECKED BY: XXX MM-YY
DESIGNED BY: XXX MM-YY
CHECKED BY: XXX MM-YY

STATE OF FLORIDA
DEPARTMENT OF TRANSPORTATION

ROAD NO.	COUNTY	FINANCIAL PROJECT ID

SHEET TITLE: MSE WALLS (SHEET 5 OF 5) WALL DETAILS

PROJECT NAME: MSE WALLS EXAMPLE 1 PERMANENT MSE WALLS

REF. DWG. NO.

SHEET NO.