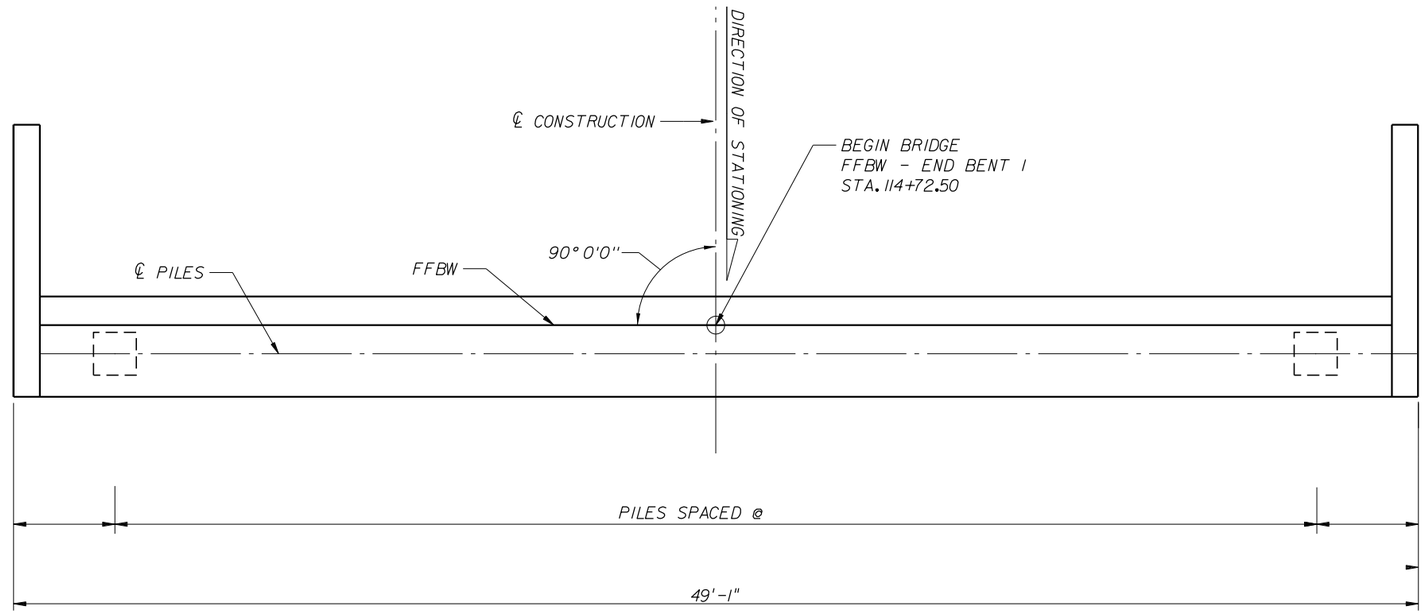

PLAN

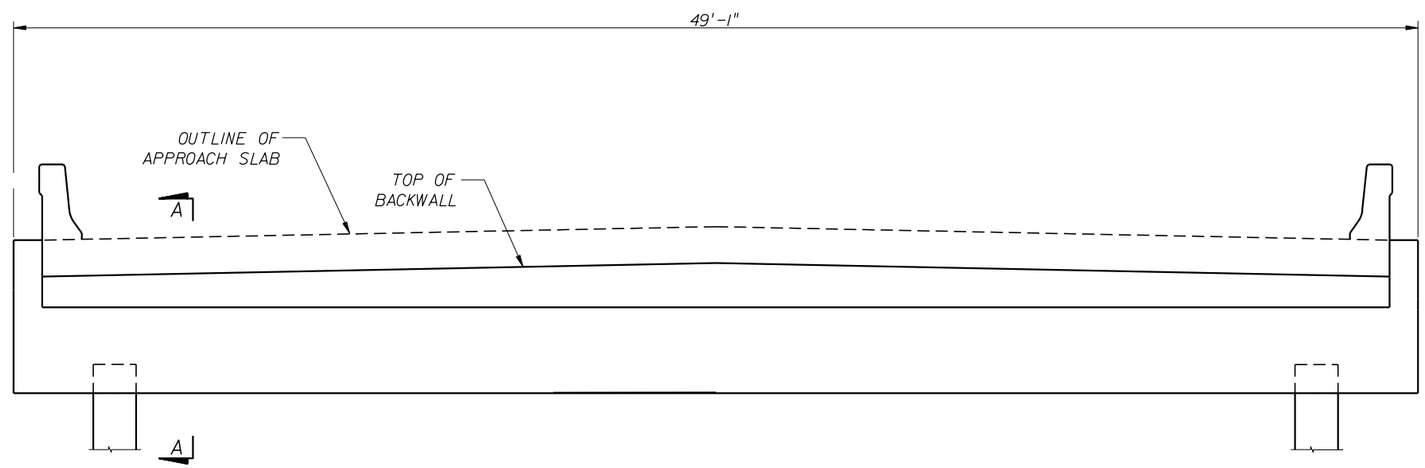

ELEVATION

BRIDGE NO. XXXXXX

REVISIONS					
DATE	BY	DESCRIPTION	DATE	BY	DESCRIPTION

STRUCTURES DESIGN OFFICE
CENTRAL OFFICE
605 Suwannee Street, MS 33
Tallahassee, Florida 32399-0450

DRAWN BY: XXX MM-YY
CHECKED BY: XXX MM-YY
DESIGNED BY: XXX MM-YY
CHECKED BY: XXX MM-YY

STATE OF FLORIDA
DEPARTMENT OF TRANSPORTATION

ROAD NO.	COUNTY	FINANCIAL PROJECT ID

SHEET TITLE: END BENT

PROJECT NAME: END BENT EXAMPLE 1
FLAT SLAB SUPERSTRUCTURE

REF. DWG. NO.

SHEET NO.