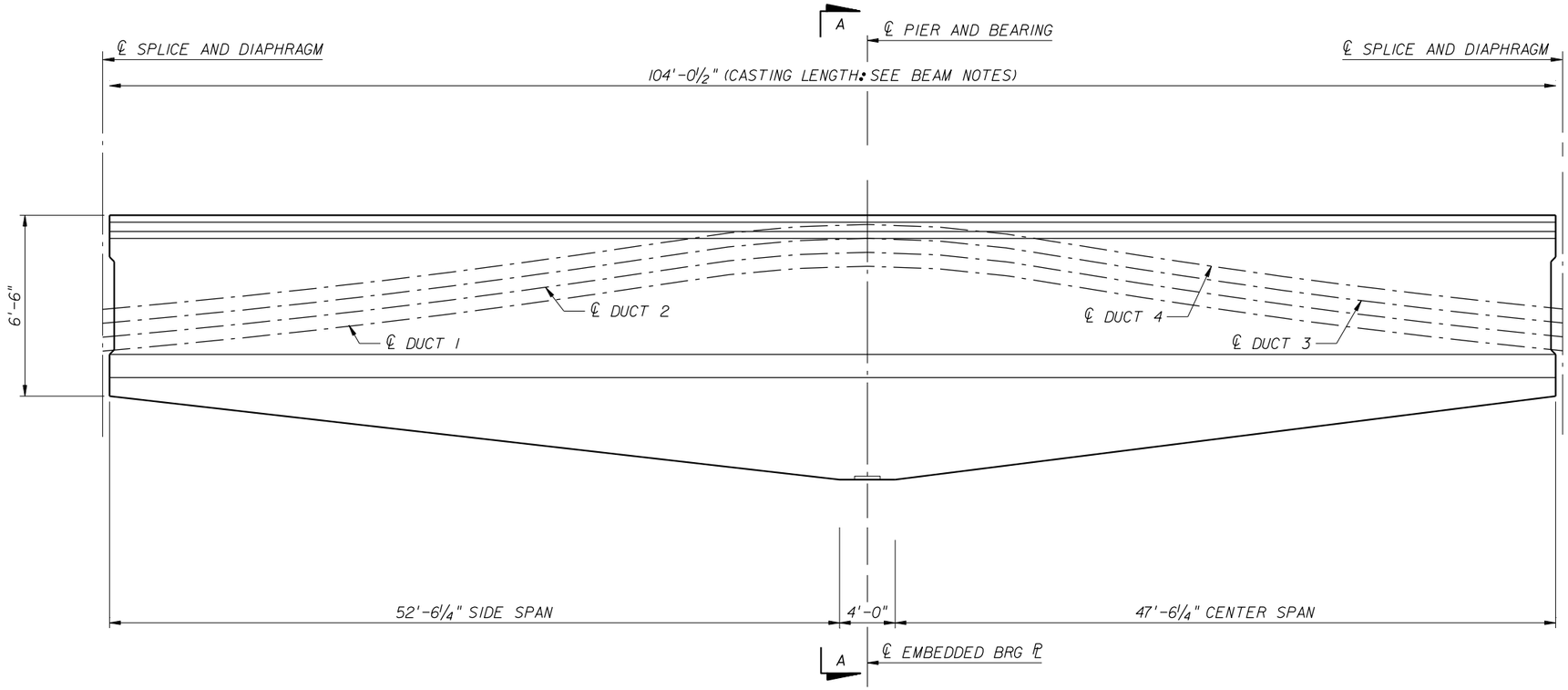

PIER BEAM SEGMENT

(PIER 46 SHOWN, PIER 47 OPPOSITE HAND)

BRIDGE NO. XXXXXX

REVISIONS					
DATE	BY	DESCRIPTION	DATE	BY	DESCRIPTION

STRUCTURES DESIGN OFFICE

CENTRAL OFFICE
605 Suwannee Street, MS 33
Tallahassee, Florida 32399-0450

DRAWN BY: XXX MM-YY
CHECKED BY: XXX MM-YY
DESIGNED BY: XXX MM-YY
CHECKED BY: XXX MM-YY

STATE OF FLORIDA
DEPARTMENT OF TRANSPORTATION

ROAD NO.	COUNTY	FINANCIAL PROJECT ID

SHEET TITLE: PIER BEAM SEGMENTS (SHEET 1 OF 2)

PROJECT NAME: SUPERSTRUCTURE DETAILS EXAMPLE 4
SPLICED GIRDER PIER BEAM SEGMENTS

REF. DWG. NO.

SHEET NO.

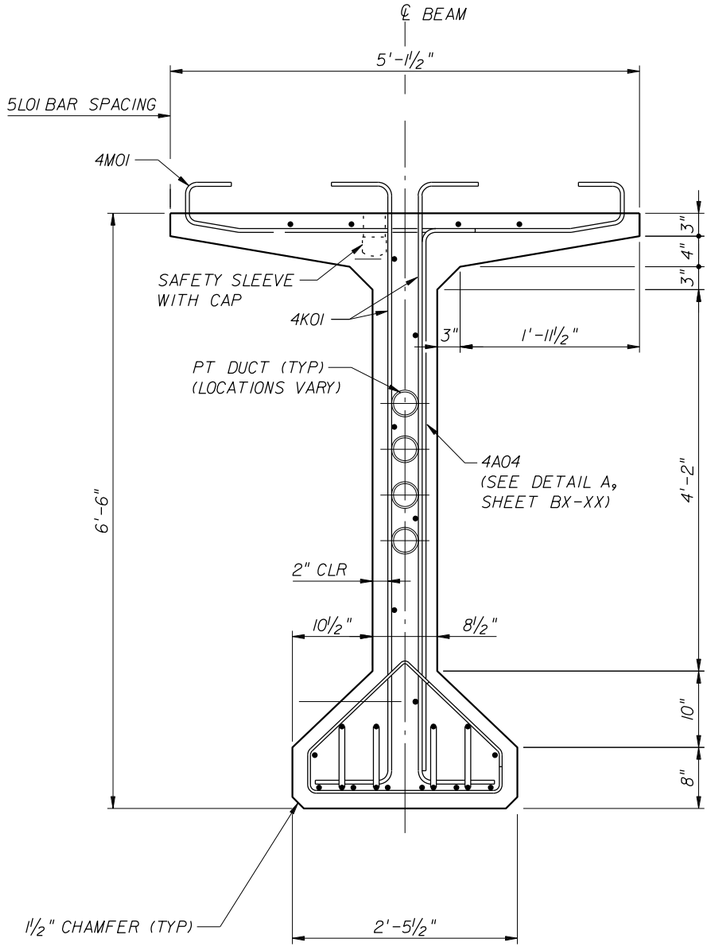

END BEAM SECTION & SECTION DIMENSIONS

(LOOKING TOWARDS ℄ BEAM SEGMENT)

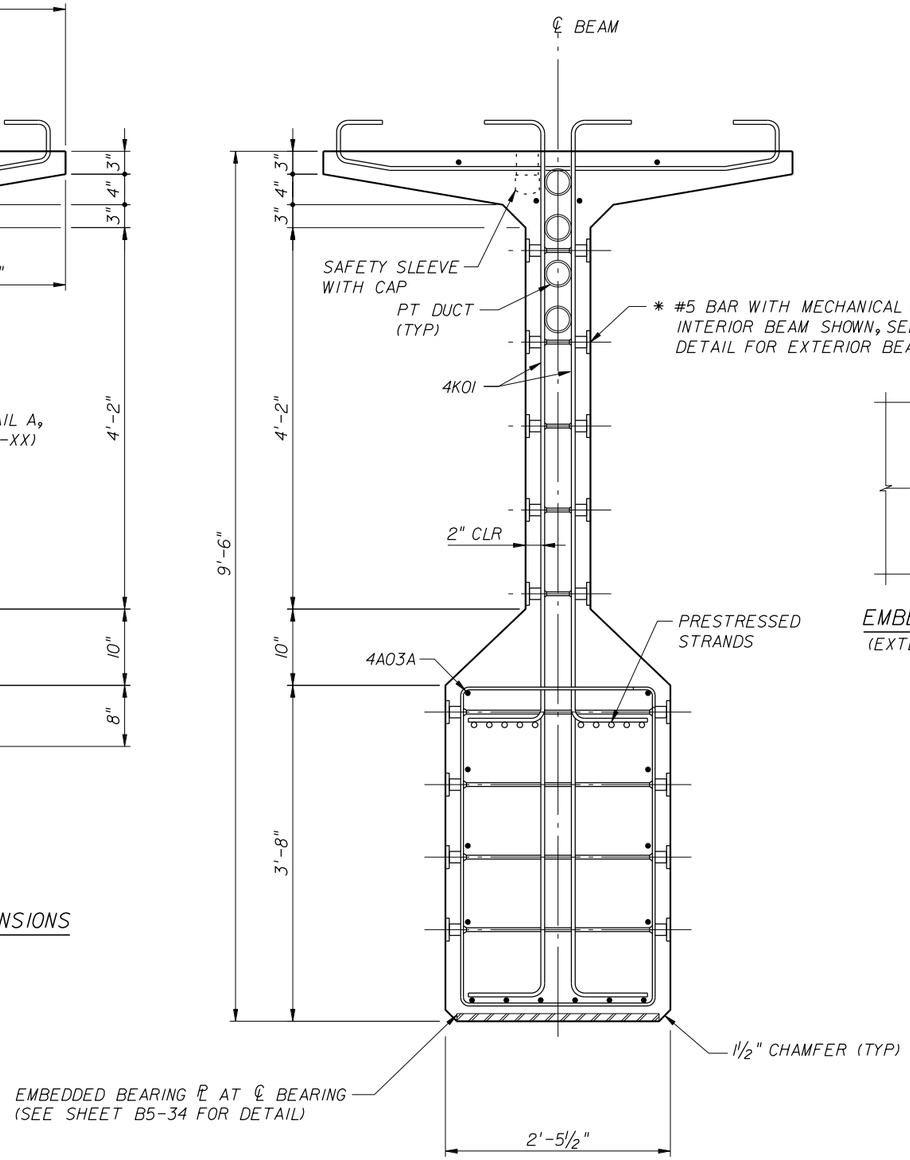

SECTION A-A

(INTERIOR BEAM SHOWN)

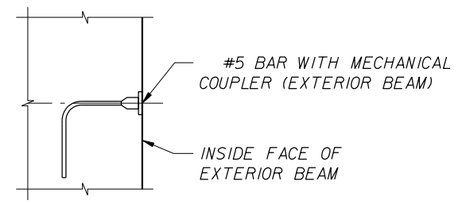

EMBED DETAIL

(EXTERIOR BEAM)

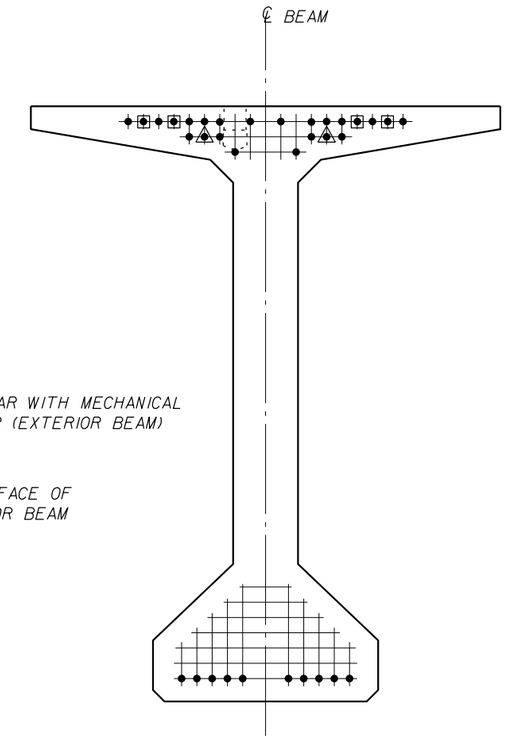

STRAND PATTERN - (34) 0.6" Ø STARNDS

◆ INDICATES STRANDS DEBONDED OVER 6'-0" EACH END

◉ INDICATES STRANDS DEBONDED OVER 12'-0" EACH END

STRAND DESCRIPTION:
0.6" DIAMETER STRANDS SHALL BE
GRADE 270, LOW RELAXATION STRANDS
STRESSED AT 43.9 KIPS EACH.
AREA PER STRAND EQUALS 0.217 SQ. IN.

BRIDGE NO. XXXXXX

REVISIONS					
DATE	BY	DESCRIPTION	DATE	BY	DESCRIPTION

STRUCTURES DESIGN OFFICE
CENTRAL OFFICE
605 Suwannee Street, MS 33
Tallahassee, Florida 32399-0450

DRAWN BY: XXX MM-YY
CHECKED BY: XXX MM-YY
DESIGNED BY: XXX MM-YY
CHECKED BY: XXX MM-YY

STATE OF FLORIDA
DEPARTMENT OF TRANSPORTATION

ROAD NO.	COUNTY	FINANCIAL PROJECT ID

SHEET TITLE: PIER BEAM SEGMENTS (SHEET 2 OF 2)

PROJECT NAME: SUPERSTRUCTURE DETAILS EXAMPLE 4
SPLICED GIRDER PIER BEAM SEGMENTS

REF. DWG. NO.

SHEET NO.