NOTE:
ALL EXISTING UTILITIES IN CONFLICT WITH PROPOSED BRIDGE SHALL BE RELOCATED BY OTHERS PRIOR TO THE START OF CONSTRUCTION.

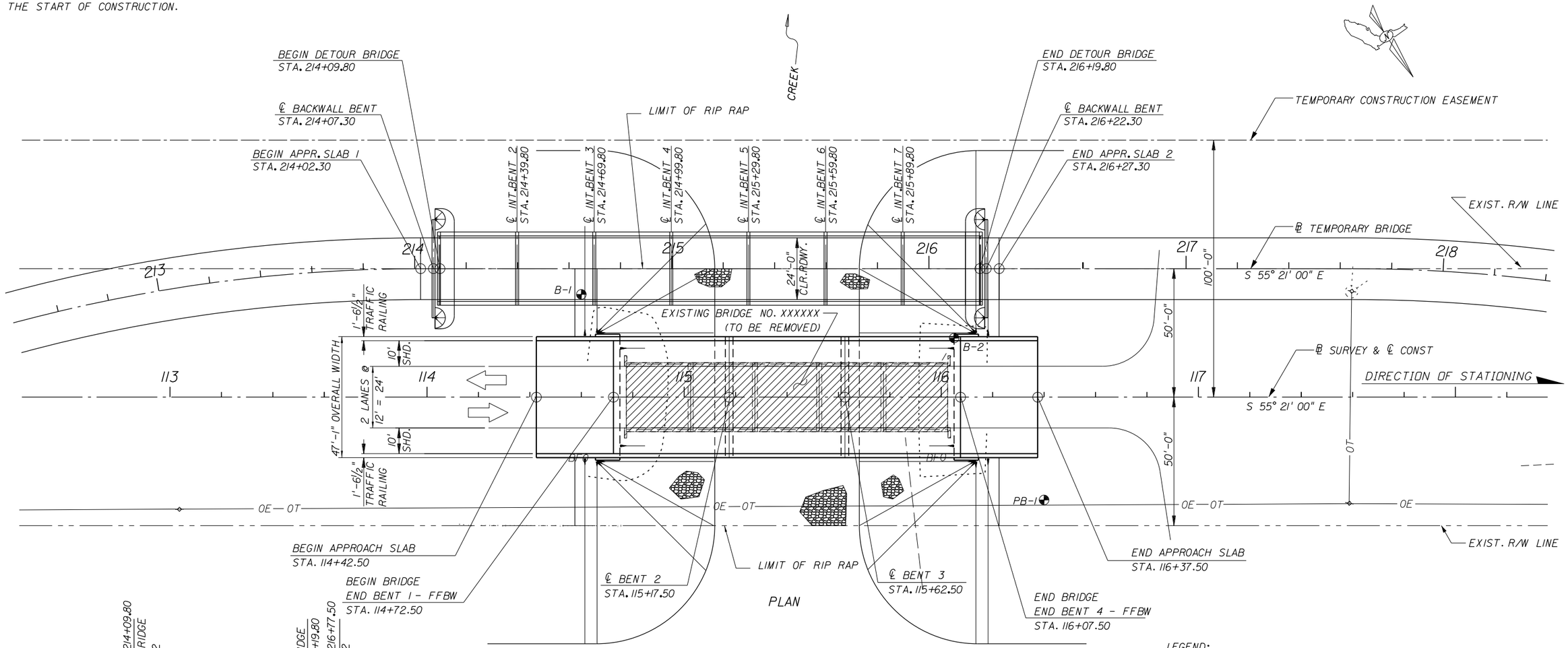

PLAN

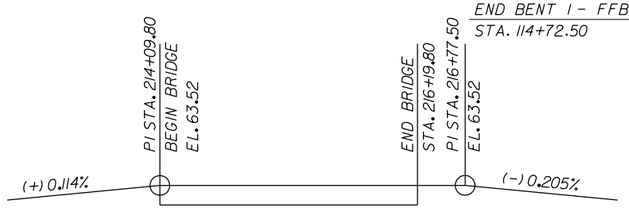

VERTICAL GRADE INFORMATION DETOUR BRIDGE

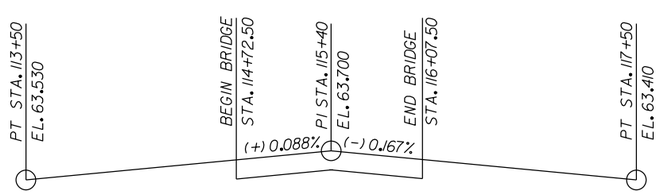

VERTICAL GRADE INFORMATION PROPOSED BRIDGE

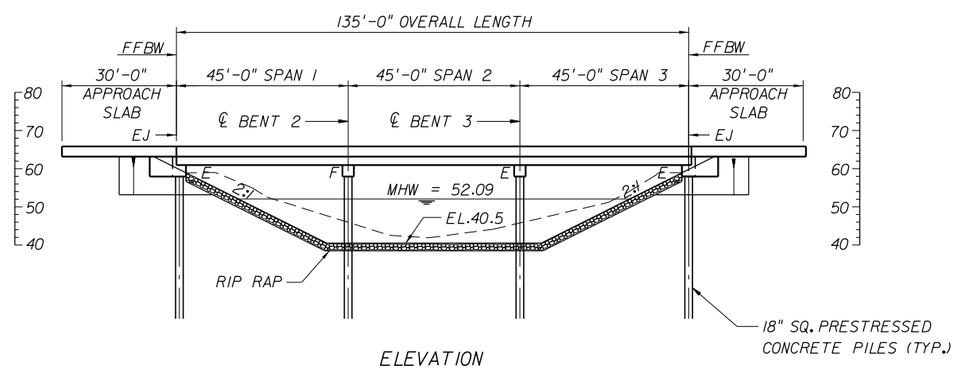

ELEVATION

LEGEND:

- ◐ INDICATES SOIL BORING LOCATION
- ▨ INDICATES EXISTING STRUCTURE TO BE REMOVED
- EJ INDICATES DECK EXPANSION JOINT

TRAFFIC DATA - CR 523

2002 ADT = 4,117
2022 ADT = 6,426
K = 9.5%
D = 60%
DESIGN SPEED = 50MPH

BRIDGE NO. XXXXXX

REVISIONS					
DATE	BY	DESCRIPTION	DATE	BY	DESCRIPTION

STRUCTURES DESIGN OFFICE
CENTRAL OFFICE
605 Suwannee Street, MS 33
Tallahassee, Florida 32399-0450

DRAWN BY: XXX MM-YY
CHECKED BY: XXX MM-YY
DESIGNED BY: XXX MM-YY
CHECKED BY: XXX MM-YY

STATE OF FLORIDA
DEPARTMENT OF TRANSPORTATION

ROAD NO.	COUNTY	FINANCIAL PROJECT ID

SHEET TITLE: PLAN AND ELEVATION

PROJECT NAME: PLAN AND ELEVATION EXAMPLE 2
BRIDGE REPLACEMENT WITH TEMPORARY DETOUR BRIDGE

REF. DWG. NO.

SHEET NO.