2010 ADA Standards for Accessible Design and 2012 Florida Accessibility Code

ADA

Building Facilities Accessibility 2017

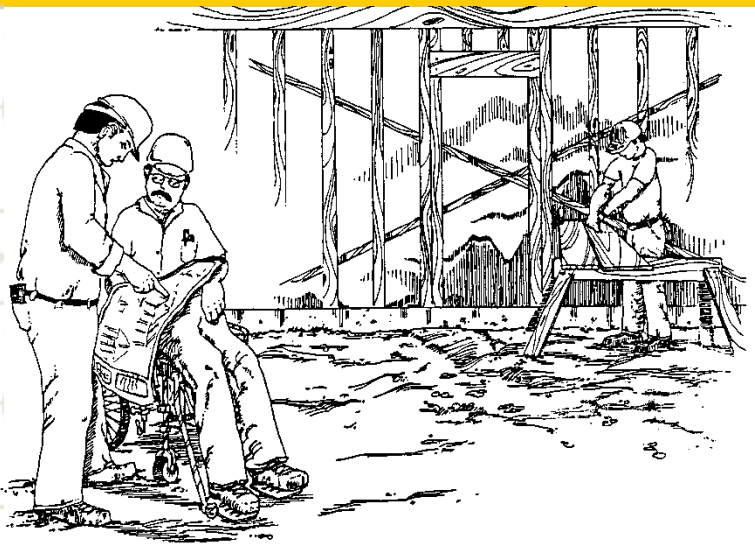

Dean Perkins, Architect, CPM
ADA Coordinator

Introduction / Agenda

- What is ADA/FAC?
  - History, Purpose
- Features of Accessibility
  - ADA Accessibility Guidelines
  - Florida Access Code
- How ADA/FAC impacts FDOT
  - FDOT response
- Examples of FDOT projects
  - The Good, the Bad, the Ugly
- How you can help us comply

Introduction (cont.)

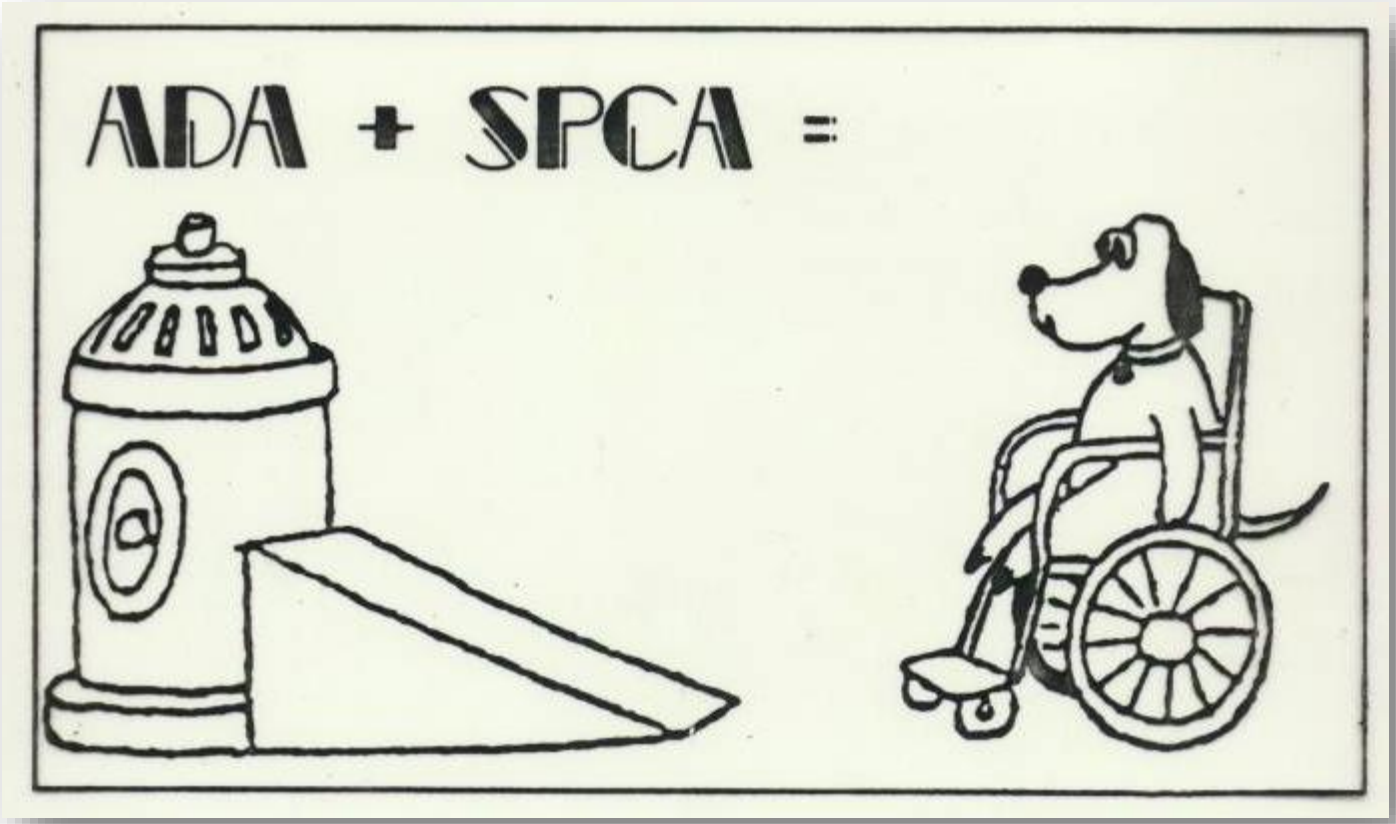

What's wrong with this picture?

What is a Disability?

- A ***physical or mental impairment*** that ***substantially limits*** one or more of the ***major life activities***
- A ***record*** of such an impairment
- ***Being regarded*** as having such an impairment

Types of Disabilities

- Mobility impairments
- Hearing impairments
- Vision impairments
- Learning disabilities
- Diseases

Diseases & Conditions such as: orthopedic, visual, speech and hearing impairments, cerebral palsy, epilepsy, muscular dystrophy, multiple sclerosis, cancer, heart disease, diabetes, mental retardation, emotional illness, specific learning disabilities, HIV, tuberculosis, drug addiction, and alcoholism.

USDOJ

Mobility Aids

- Cane
- Walker
- Crutches
- Wheelchair
  - Powered
  - Non-powered
- Scooter
- Service animal

White Cane

- Stride length
  - 18" to 30"
- Sweep width
  - 24" to 36"
- Pace
  - 2' - 4' per second

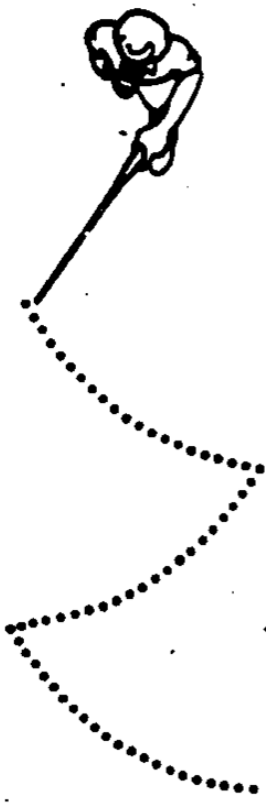

Crutches & Walker

- Crutches
  - Stride length
    - 8″ to 30″
  - Width
    - 36″ to 42″
  - Pace
    - 1′ - 3′ per second
- Walker similar
  - Stride length
    - 6″ to 18″

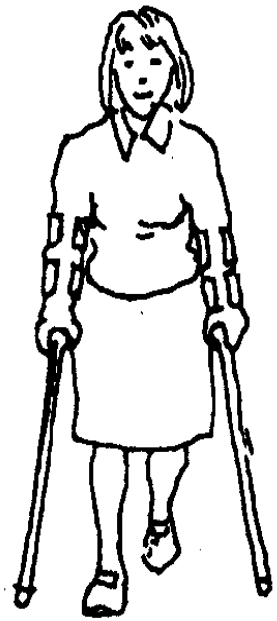

Wheelchair & Scooter

- Space needed
  - 30" x 48" min. maneuvering space
  - 60" turning diameter
  - 60" to pass another wheelchair
  - 48" to pass a pedestrian

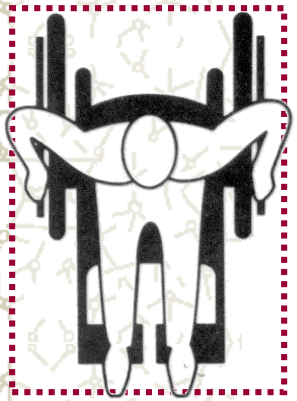

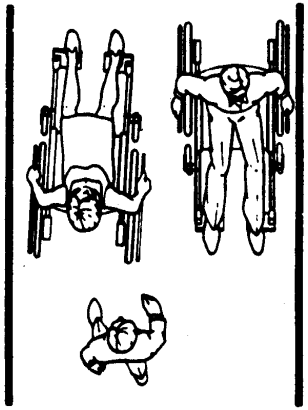

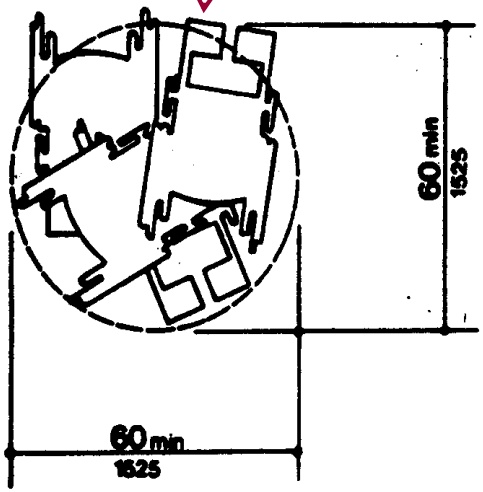

Service Animal

- ***Dog*** only
- Guide Dog / Dog Guide
- Hearing assistance dog
- Space needed
  - 42" x 60" approx.
  - Stride length
    - 18" to 30"
  - Pace
    - 2' - 4' per second
  - Similar to cane user

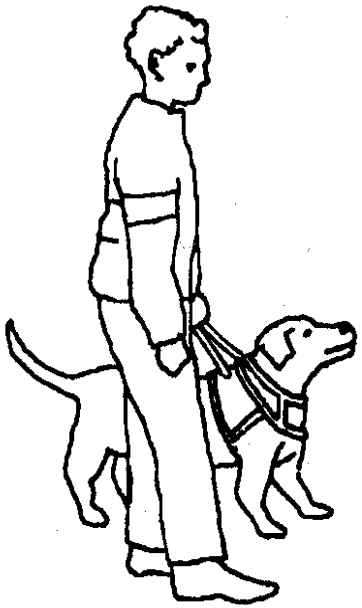

Vision Aids

- White cane
- Service animal
- Braille / large print
- Tactile Signage
  - Tactile characters
  - Braille

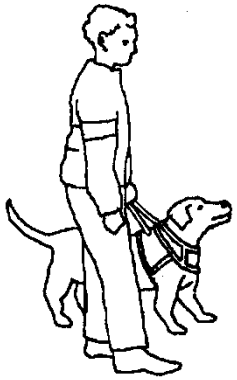

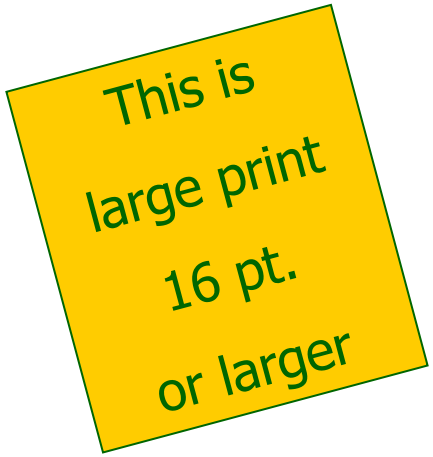

Hearing Aids

- Sign language
- Signage
- Text telephones / TTY's / TDD's
- Assistive listening systems

Terminal Gates
A1-A10

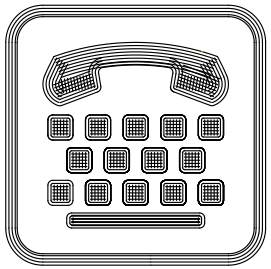

Transportation…….

ADA - Civil Rights Law

- 1964 Civil Rights Act
- 1968 Architectural Barriers Act
- 1973 Rehabilitation Act – Section 504
- **1990 Americans with Disabilities Act**
  - January 26, 1992 – effective date
  - July 1, 1994 – new final rule (enforceable stds.)
  - July 26, 2004 – new facilities guidance (ADA/ABA)
  - Nov 23, 2005 – new ROW guidance (PROWAG)
  - ***ADA Standards for Transportation Facilities*** – FHWA, Effective: Nov 29, 2006
  - ***2010 ADA Standards for Accessible Design*** – USDOJ, **Effective: March 15, 2012**

FAC - Building Code

Florida Accessibility Code for Building Construction

- **1974-1989 – Florida accessibility laws adopted and revised**
  - Florida is more stringent than federal regulations and most other states
- **1993 – Florida adopts ADAS**
  - Florida Accessibility Code for Building Construction (FACBC) – Includes more stringent requirements
- **1998 – Florida Code certified by USDOJ**
  - Florida Access Code is equivalent to ADA Standards
- **2012 – Florida updates Florida Access Code**
  - Based on 2010 ADA Standards & Regulations
  - Still includes more stringent requirements
  - FBC, **Effective: March 15, 2012**

Application – 101

- The ***2010 ADA Regulations*** and ***2010 ADA Standards*** are coordinating documents with some different 'application' language
  - Title II entities: public facilities - state and local governments
  - Title III entities: public accommodations – private businesses

- The ***2012 Florida Accessibility Code*** uses the ***2010 ADA Standards*** as a base document, includes language from the ***ADA Regulations,*** then adds Florida-specific requirements, most of which are held over from the prior Florida Access Code

Scope – 201

- Incorporates references to new ADA Regulations:
  - Applies to public buildings and facilities, places of accommodations and commercial facilities, state and local government facilities, and private clubs
  - Applies to new construction and alterations
  - Removal of architectural barriers shall not create a risk to health and safety of users
- Compliance with ***Florida Accessibility Code*** is "presumption of rebuttable evidence" of compliance with ADA regulations
  - "Presumption" does not apply to departures from criteria under "equivalent facilitation"

New Definitions – 206

(from 2010 ADA Regulations)

- Alteration
- Commercial Facilities
- Designated Public Transportation
- Specified Public Transportation
- Disability
- Existing Facility
- Housing at a Place of Education
- Maximum Extent Feasible
- Path of Travel
- Place of Public Accommodation
- Primary Function
- Private Club
- Public Accommodation
- Public Entity
- Readily Achievable
- Resort Condominium
- Shopping Center or Mall
- Theme Park or Entertainment Complex
- Wheelchair

Vertical Accessibility – 201.1.1

- Access required to "all levels"
- Some Exceptions:
  1) Service and equipment spaces and rooms
  2) Unoccupiable spaces, not designed for human occupancy
  3) Occupiable spaces and rooms that house no more than five persons,
  4) Theaters, etc., with stadium-style seating
  5) Play and recreation areas
  6) Employee work areas
  7) Exempted Facilities, sites and spaces

Waiver Still Required!

(221.1.1)

Transportation Facilities
206, 406 & 810

- Subject to 49 CFR 27 & 37*
- Some added information:
  - Accessible routes (206.3)
  - Detectable warnings on curb ramps (406.8)
  - Bus boarding areas (810.2.2), and
  - Rail station platforms (810.5.3).

**** Public transit facilities***

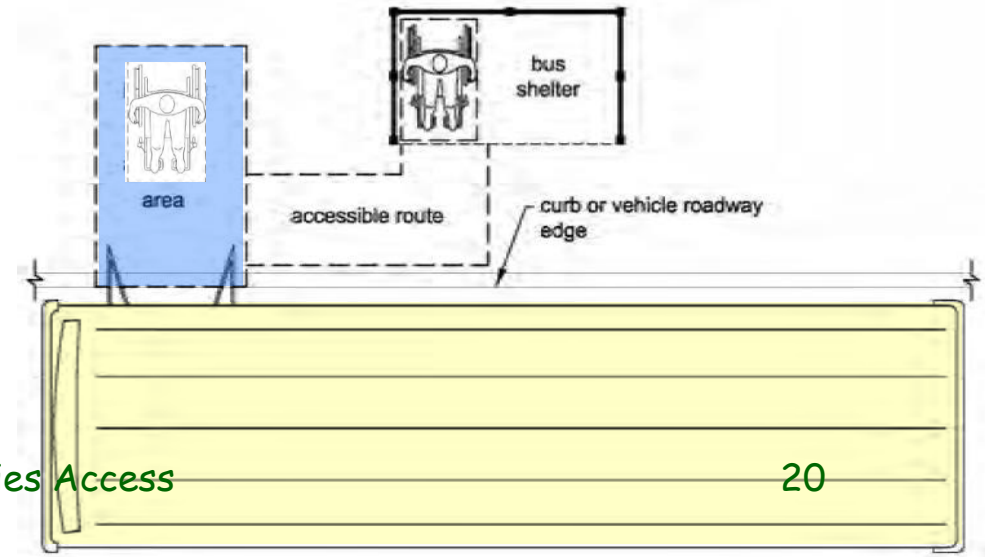

Barriers at Exits - 202

- Barriers at common or emergency entrances and exits of business establishments conducting business with the general public that are existing, under construction, or under contract for construction which would prevent a person from using such entrances or exits shall be removed.

- ***Basically: Improve existing entrances and maintain access during construction***

Parking - 208

- Size (12' min. space *and* 5' min. access aisle)
- Van Spaces (in parking structures – 1st level)
- Accessible Route Requirements (44" min.)
- Dispersion (nearest accessible entrances)
- Theme Parks (single accessible lot allowed)

- ***Little change from prior FACBC***

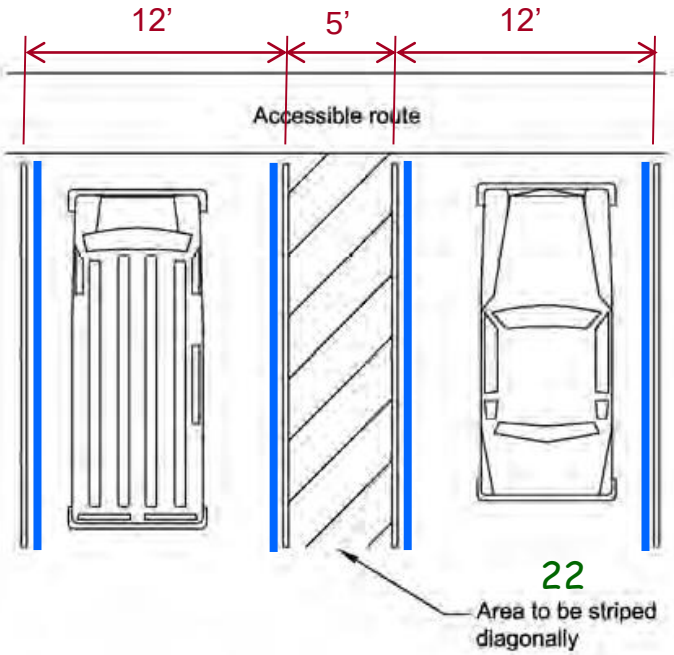

Assembly Areas - 221

- Dispersed seating
  - Vertical: all 'accessible' levels
  - Horizontal: around the stage/performance
- Temporary Facilities
  - Must not obstruct sight-lines
- Stadium-style Movie Theaters
  - 40th-100th percentile viewing angles
- Sightlines comparable to other seating

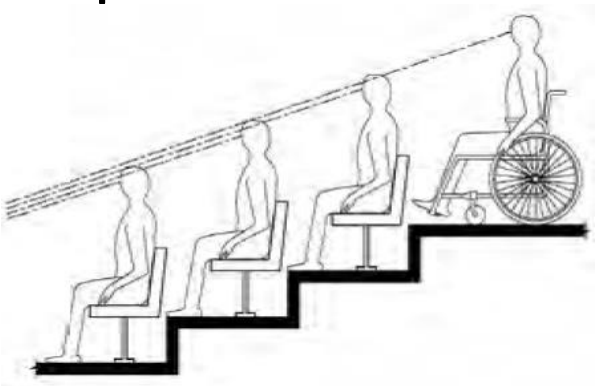

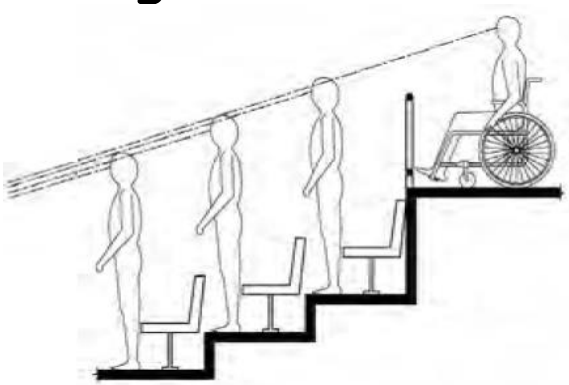

Doors and Gates - 404

- 404.2.9 – Opening Force
  - Interior Doors: 5.0 pounds force max.
  - Exterior Doors: 8.5 pounds force max.

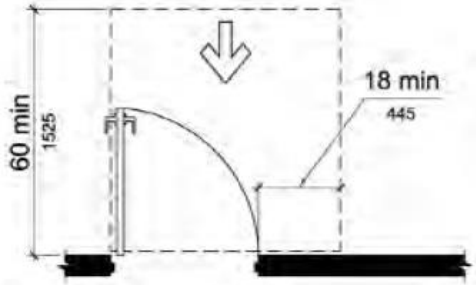

(a)
front approach, pull side

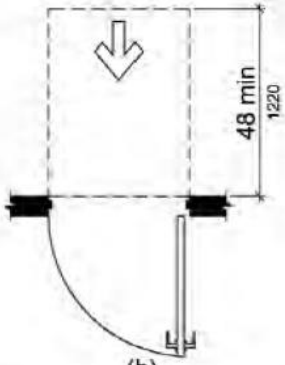

(b)
front approach, push side

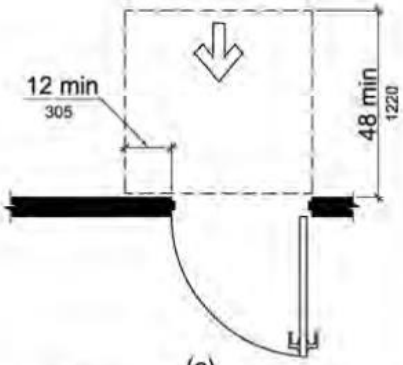

(c)
front approach, push side, door provided with both closer and latch

- ***Little change From prior FACBC***

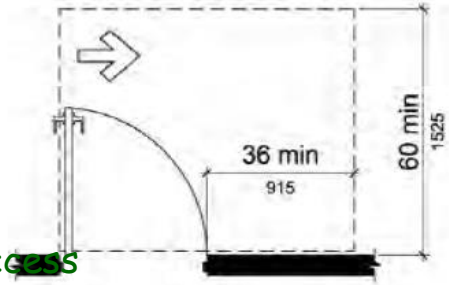

(d)
hinge approach, pull side

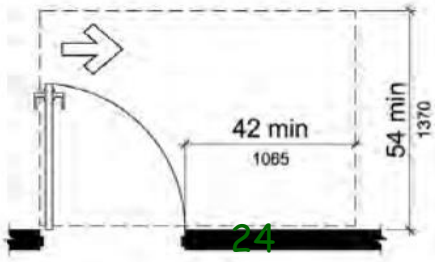

(e)
hinge approach, pull side

Toilet rooms & stalls – 604

- 604.8.1.7 – Required for new construction
- Advisory – Recommended for alterations
  - Lavatory inside room/stall
  - Water closet in corner diagonal to door

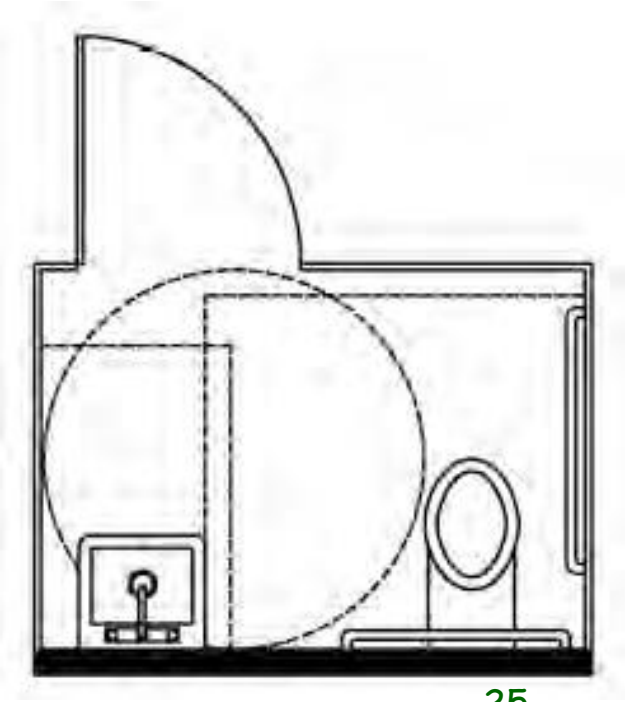

- ***Little change from prior FACBC***

Transportation…….

Components of Accessibility

- Reach Ranges
- Accessible Routes
- Surfaces
- Protruding Objects
- Parking & Loading Zones
- Curb Ramps
- Ramps
- Stairs
- Elevators
- More…

Components of Accessibility (cont.)

- Doors
- Water fountains / Water Coolers
- Water Closets
- Toilet Stalls/Rooms
- Lavatories
- Telephones
- Handrails
- Controls
- Warnings

Reach Ranges

Side

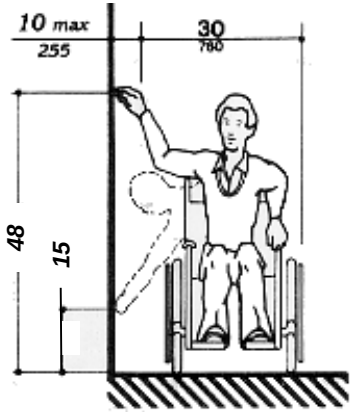

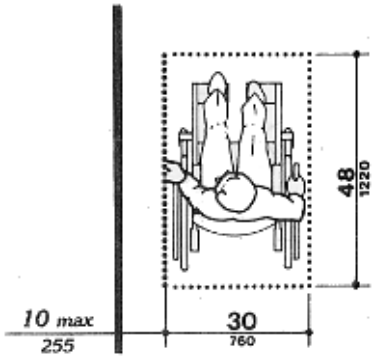

Note:
Old side range – 9"-54"
New side range – 15"-48"

Front

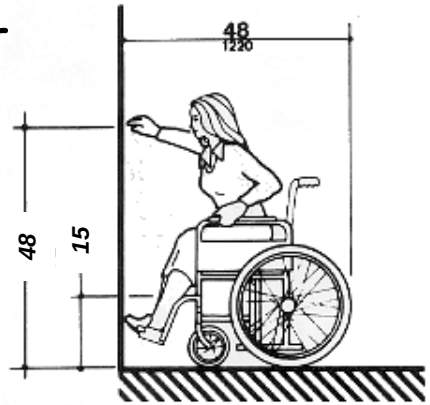

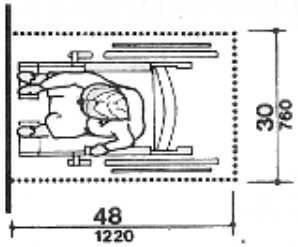

Side Reach range
now matches
Front Reach range

Accessible Routes

- 36" continuous unobstructed path
  - 48" in public ROW
- 32" min. at a point (max. 24")
- Slopes:
  - 1:12 max. allowed (8.33%)
  - >1:20 is a ramp (>5%)
  - ≤1:20 is not a ramp (≤5%)
- Cross-slope
  - Basically level
  - 1:48 max. allowed (2%)
    - Design to $1\frac{1}{2}$%

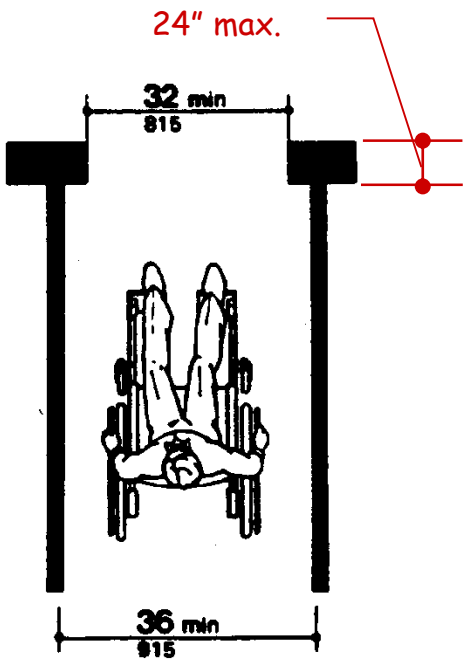

Surfaces

- Firm, stable, slip-resistant
  - Dry / wet
- Changes in level
  - $\leq \frac{1}{4}''$ --- vertical
  - $> \frac{1}{4}'' \leq \frac{1}{2}''$ --- 1:2 slope
  - $> \frac{1}{2}''$ --- 1:12 slope
- Gratings

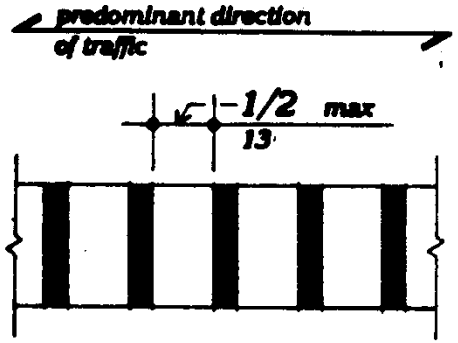

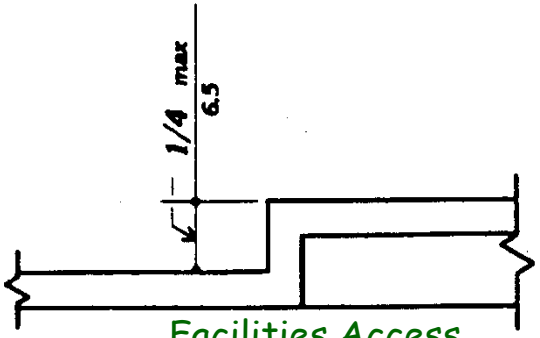

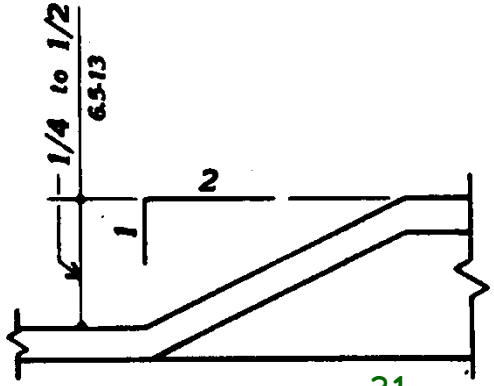

Protruding Objects

- 27" – 80" above grade
- Post-mounted
  - 12" max. protrusion
- Wall mounted
  - 4" max. protrusion
- Overhanging
  - 80" min.

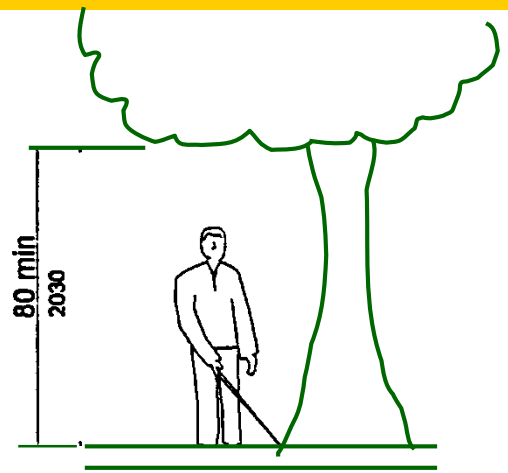

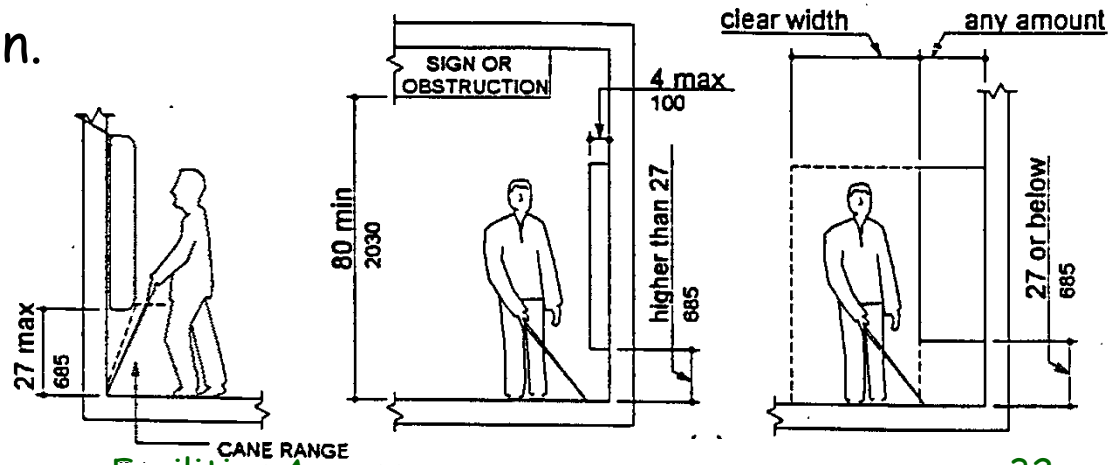

Parking

- Size
  - 12′ min. Parking Space
  - 5′ min. Access Aisle
- Signage
  - Symbol / text
  - Penalty
  - 60″ above grade - ADA/FAC
  - 84″ above grade - FDOT

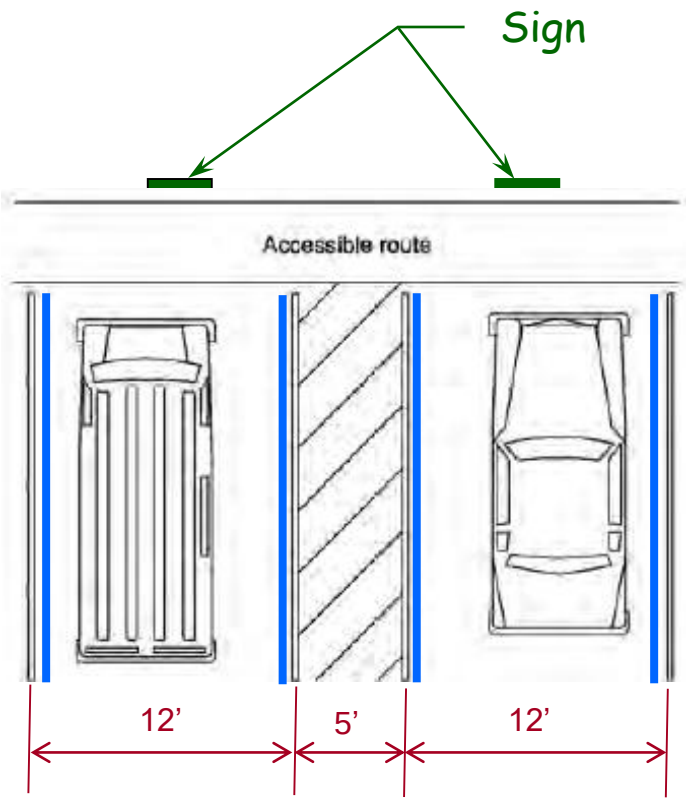

Parking (cont.)

- Number
  - Sliding percentage – *per lot*
  - 4% → 2%
    - See Table 208.2
  - 1:6 'van-accessible' spaces
- Location
  - Nearest accessible entrance(s)
  - Distributed among multiple entrances

Total Number of Parking Spaces Provided in Parking Facility	Minimum Number of Required Accessible Parking Spaces
1 to 25	1
26 to 50	2
51 to 75	3
76 to 100	4
101 to 150	5
151 to 200	6
201 to 300	7
301 to 400	8
401 to 500	9
501 to 1000	2 percent of total
1001 and over	20, plus 1 for each 100, or fraction thereof, over 1000

Passenger Loading Zones

- 5′ wide (similar to access aisle)
- Length of Space (20′ min.)
- At least 1 per 100′ of loading zone

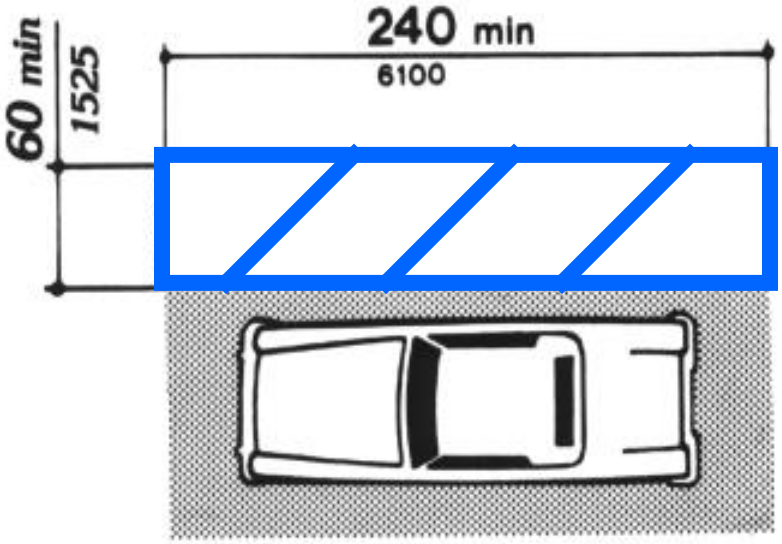

Curb Ramps

- Typ. 6" rise (7'-4$\frac{1}{4}$" run!)
  - Recommended: 7'-6" or 8'-0" ramp length
- 1:12 max. slope (8.3%)
  - 1:14 recommended (7.1%)
  - 1:48 max. cross slope (2%)
  - 1:10 max. flared sides/transition slopes (10%)
- Detectable Warnings
- Landing
  - 48" min. at top

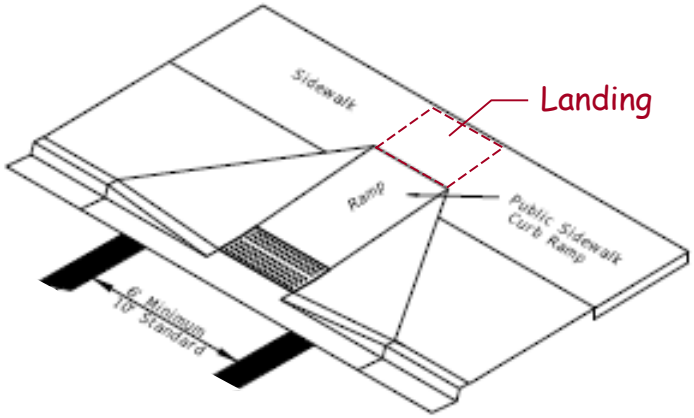

Detectable Warnings

- NOT Required on most sites: driveways & parking lots
- Required on sites of "Transportation Facilities"
  - Subject to USDOT regulations (49 CFR 27 & 37)
  - Platform edges, curb ramps, etc.
- Required within public rights of way
  - Street Crossings
  - Major Driveways with traffic signal

Detectable Warnings

- Truncated domes
  - Design Standards – Index 304
- At curb ramps
  - Full width of ramp & 24" deep
  - ***Not*** on flared sides
- At landings and flush transitions
  - 24" deep from back of curb

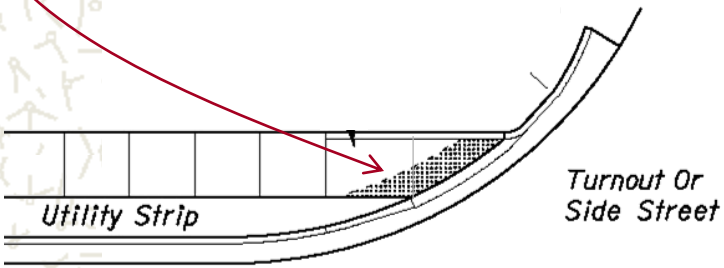

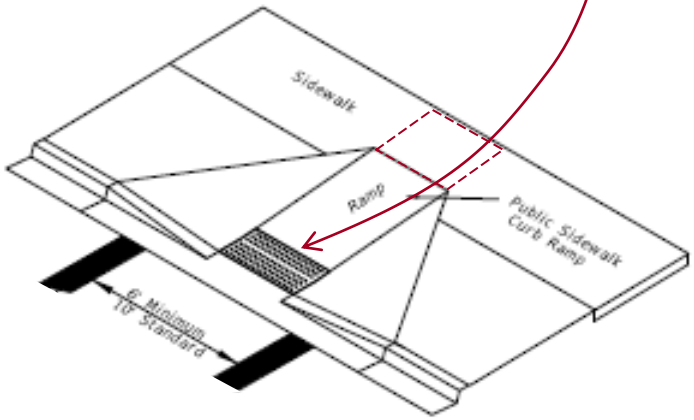

Detectable Warnings

- Truncated Domes
  - Aligned pattern
- Overlay mat, tile, paver
  - Retrofit, 3R, Maintenance, New Construction
- Color/contrast with surrounding materials
  - Light-on-dark, Dark-on-light
  - Safety yellow, black, brick red, green, etc.
  - ***NOT BLUE***!

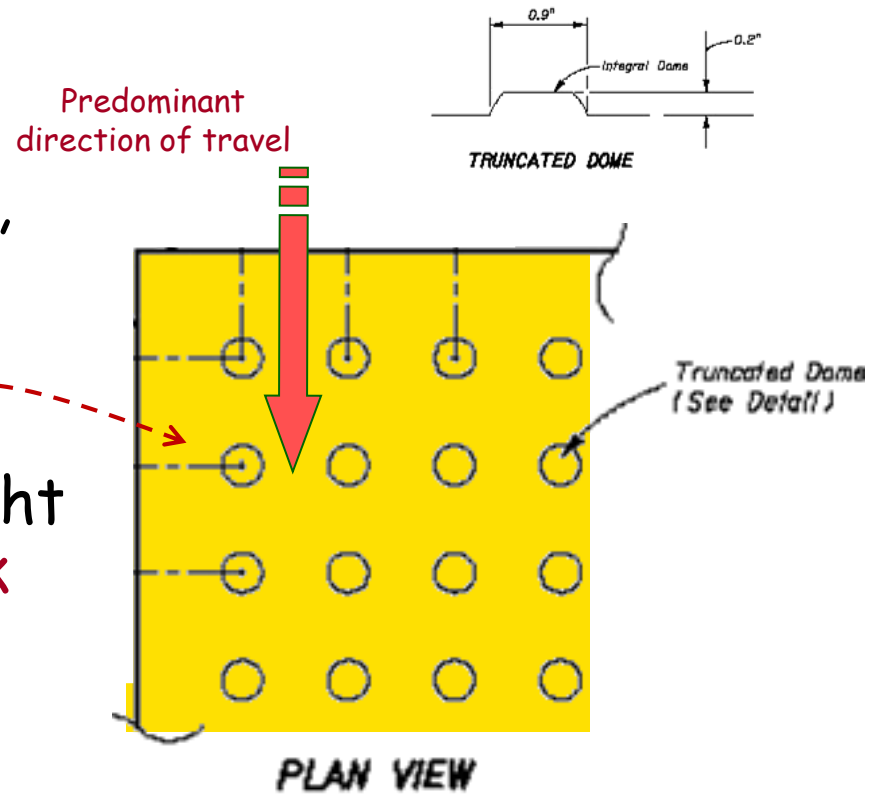

Crossings

- Curb ramp is "wholly within" markings
- Check Transitions (≤13% max., 11% rec.)
- Verify Slopes (1:12 max.)
- Check Cross-slopes (1:48 max.)
- Look for Level changes ($\frac{1}{4}$", $\frac{1}{2}$")

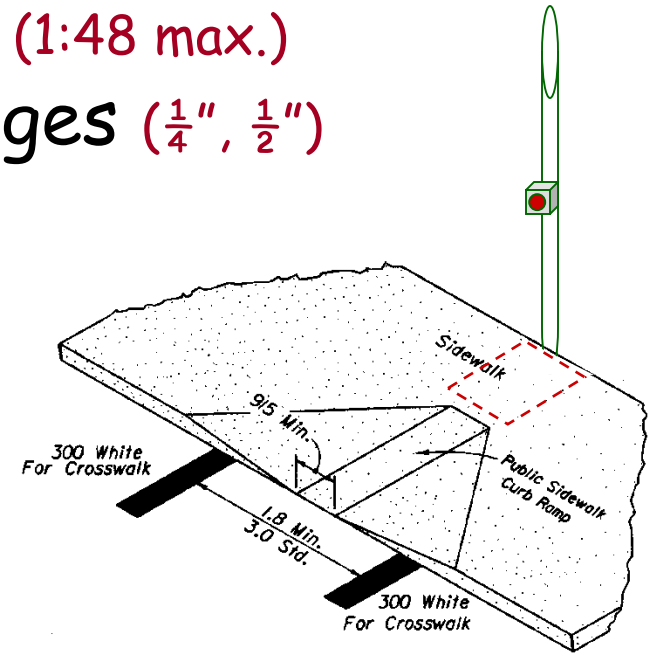

Bus Stops / Shelters

- On Accessible Route
- Boarding & alighting area (96" x 60" min.)
  - Place for bus lift to deploy
  - Firm, stable, and slip-resistant surface
  - Must connect to streets, sidewalks, etc.
- 30" x 48" clear floor area within shelter
- 36" min. approach to clear floor area

Benches / Shelters

- Bus bench and/or Shelter ***shall not*** block sidewalk!
  - Maintain 36" min. clearance
  - 60" preferred

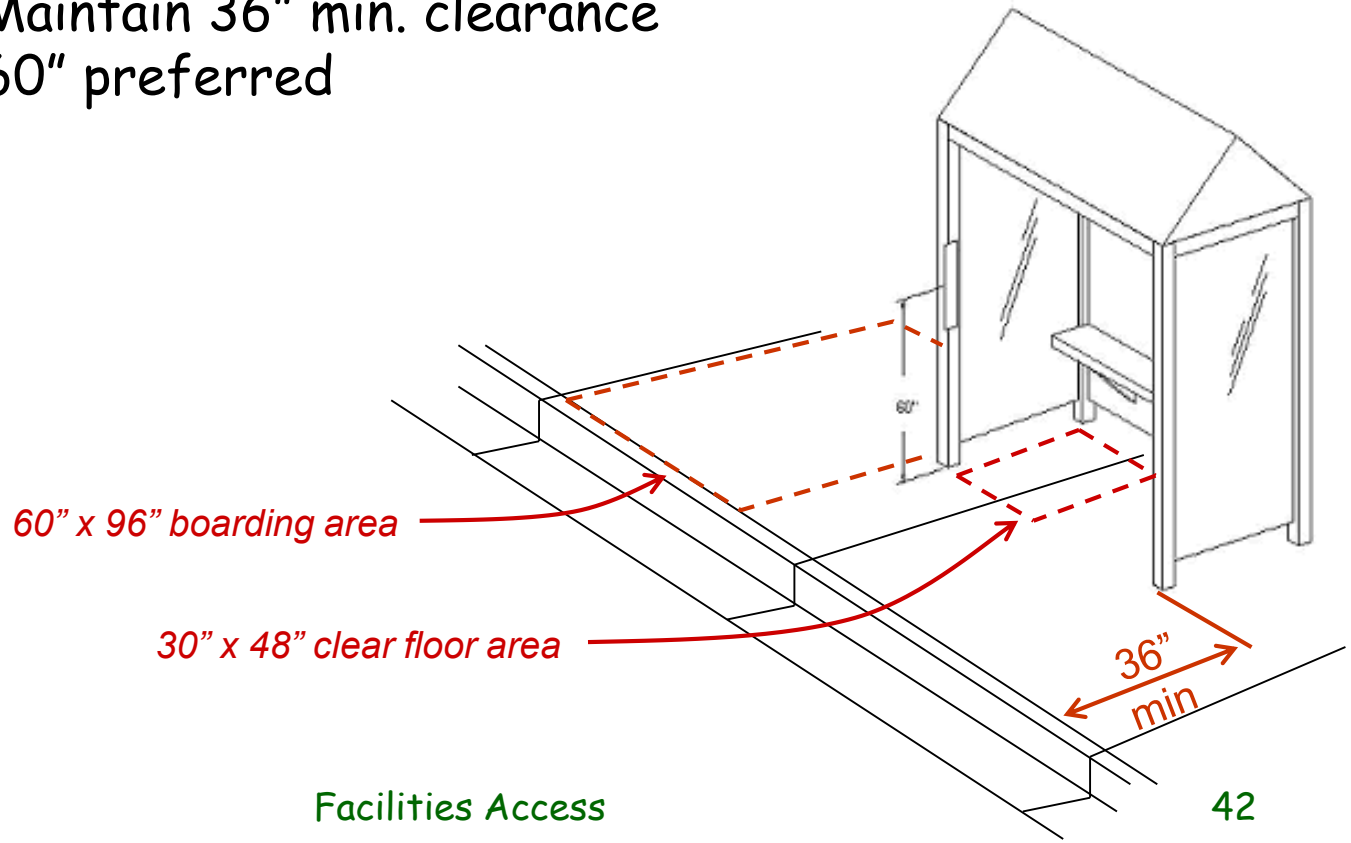

Ramps & Landings

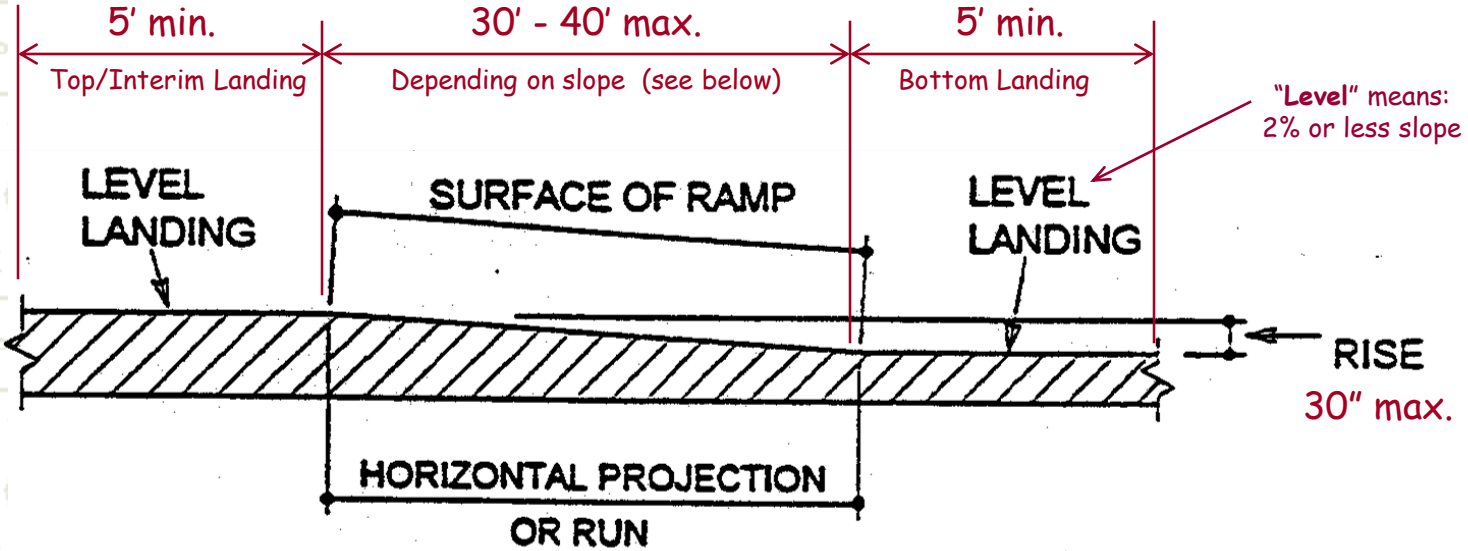

SLOPE	MAXIMUM RISE IN	MAXIMUM RISE MM	MAXIMUM HORIZONTAL PROJECTION FT	MAXIMUM HORIZONTAL PROJECTION M
1:12 TO < 1:16	30	760	30	9
1:16 TO < 1:20	30	760	40	12

Ramps (cont.)

- Handrails required
  - 2″ o.d. max.
  - 34″ – 38″ above ramp
  - 12″ extensions top & bottom

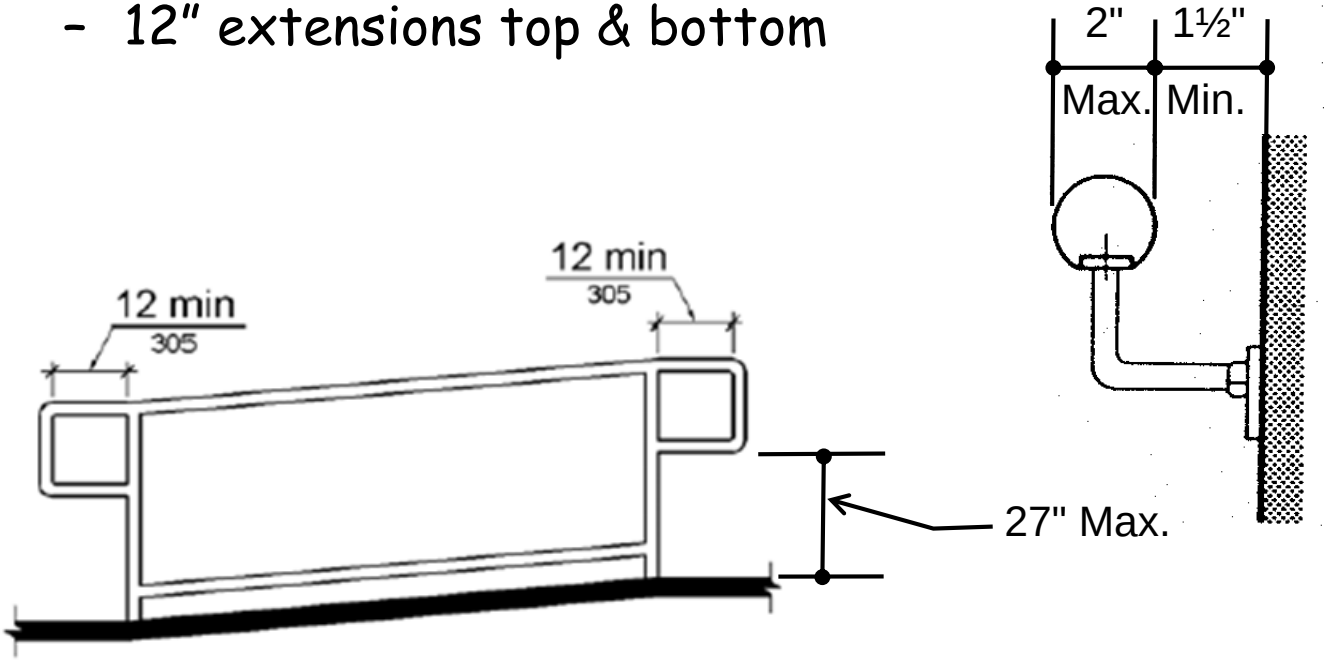

Stairs

- Handrail Extensions
  - 12" horizontal @ top
  - Tread length @ bottom
    - No horizontal extension
- 34"-38" Above nosing

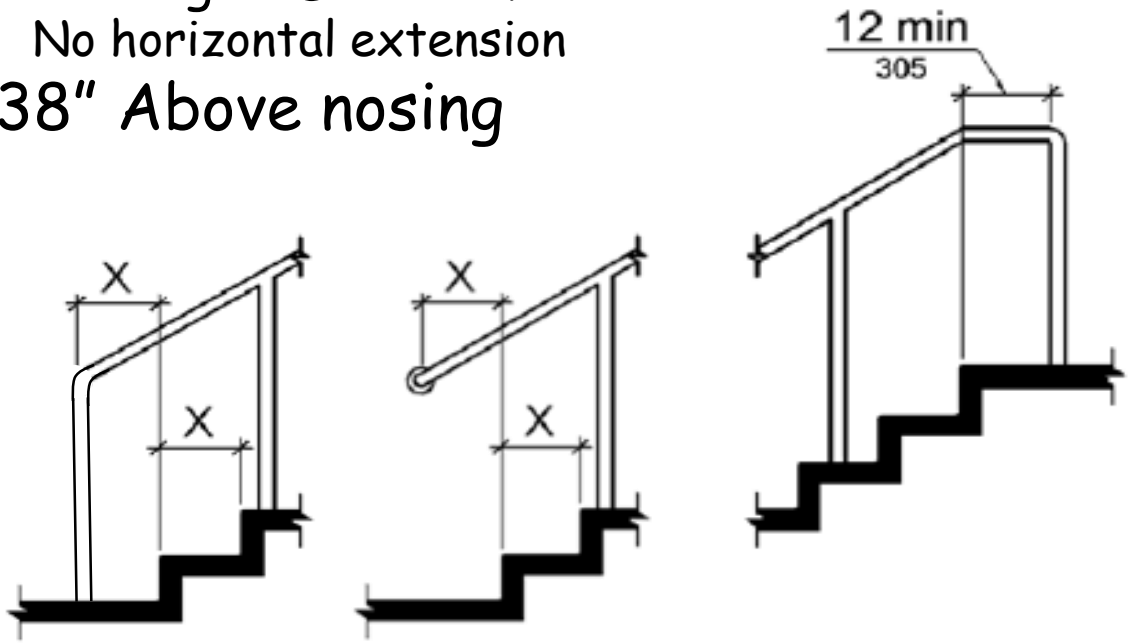

Note: X = tread depth

Elevators

- Call buttons
  - 42" above floor – ℄ between buttons
- Hall Lanterns
  - ≥72" above floor
- Tactile Signage
  - 48"-60" above floor
  - at Hoistway Entrance
- Reopening Device
  - Non-contact
  - 5" & 29" above floor (min.)

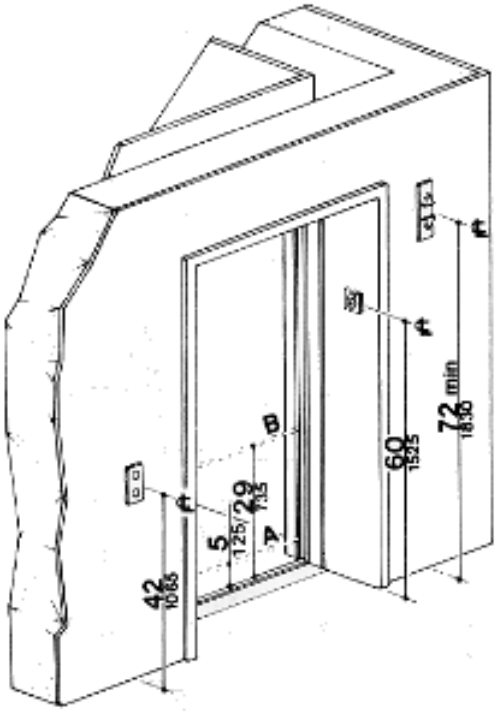

Doors

- 32" Clear Width
  - 36" Door
- Doors in series
  - 48" Clearance

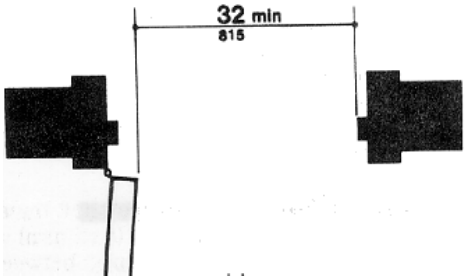

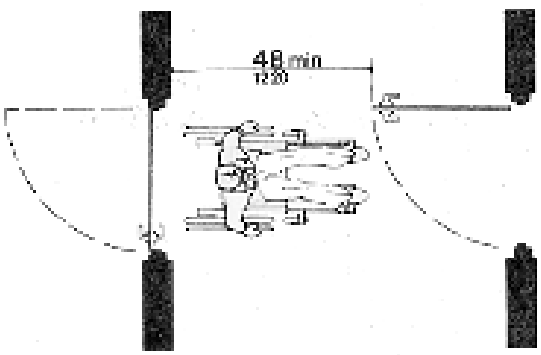

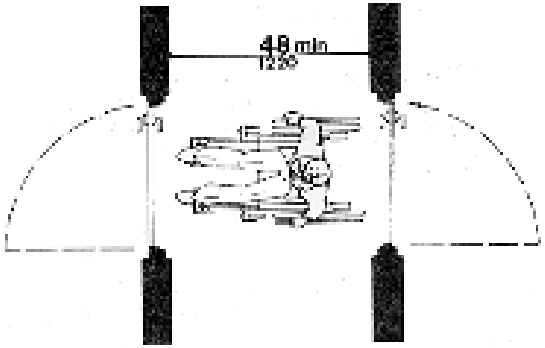

Doors (cont.)

- Energy to operate
  - (a) exterior hinged doors: 8.5 lbf (FAC)
  - (b) interior hinged doors: 5 lbf
  - (c) sliding or folding doors: 5 lbf
- Maneuvering space
  - 36"+ wide (min.) x 48"+ deep on both sides
  - +18"-24" additional width on 'pull' side

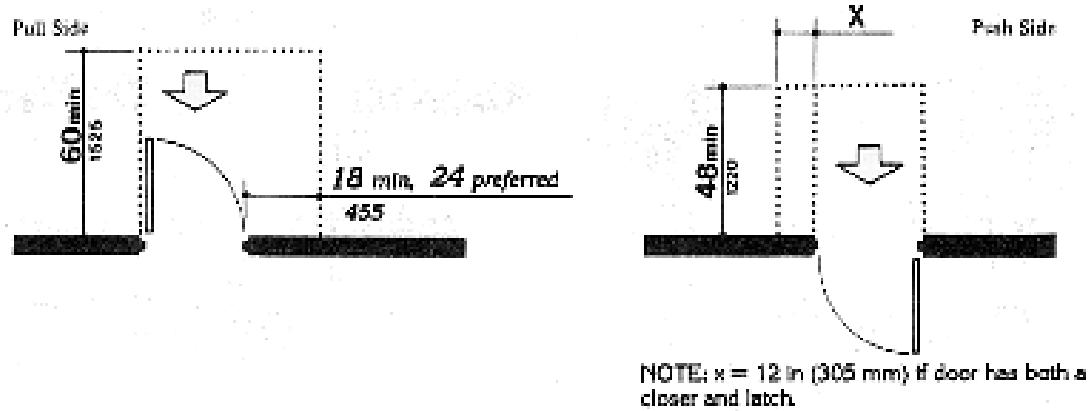

Water Fountains/Coolers

- Knee/toe space
- Spout height – 36" max.
  - w/in 5" of front of unit
  - 4" high water flow
- Controls
  - Front and/or side

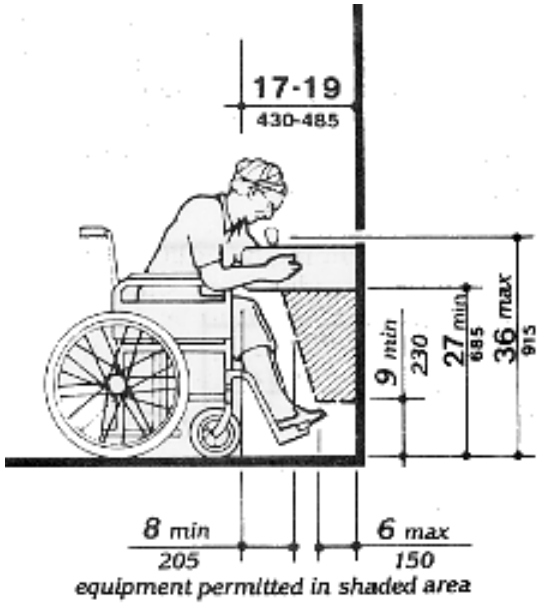

Water Closets

- 17"-19" seat height
- 16-18" centerline to side wall
- 36" grab bar at rear
- 42" min. grab bar at side
- 30" x 48" Maneuvering space at front *and* at side

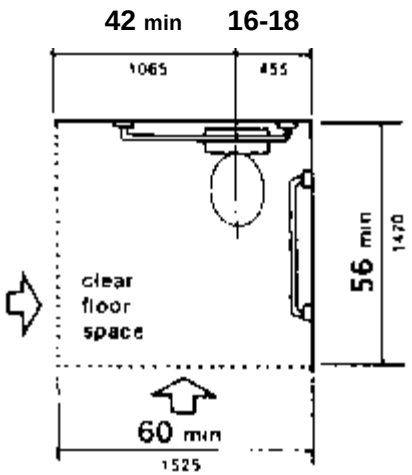

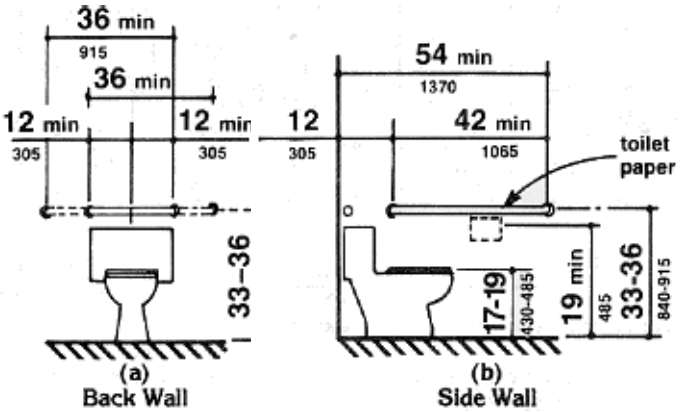

Toilet Stalls

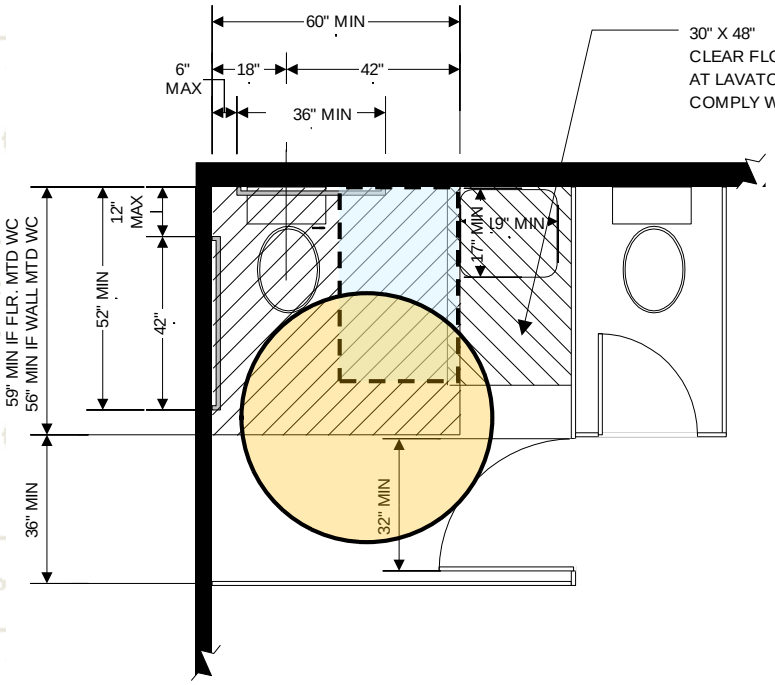

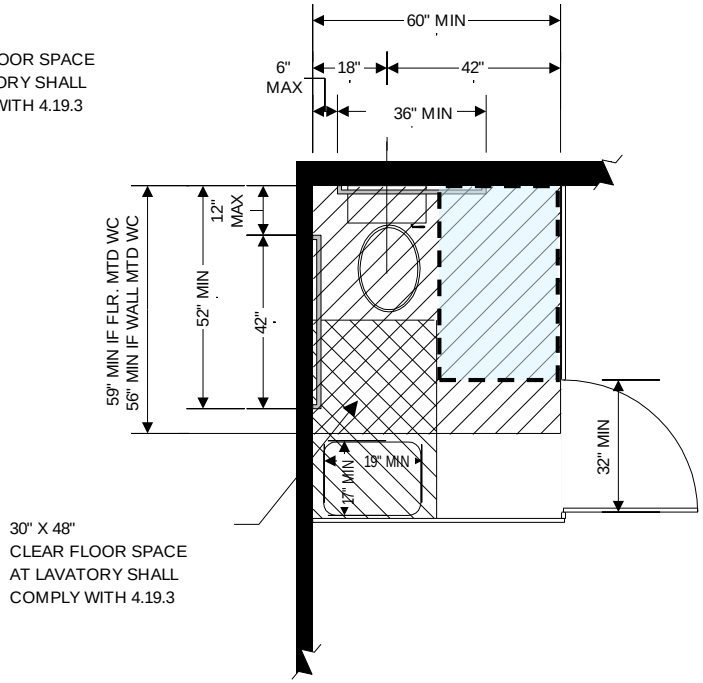

Lavatories

- Knee/toe space
- Clear floor space
- Insulate under lavatory
  - Hot pipes
  - Sharp objects
- Faucet controls
  - Levers
  - Electronic
- Mirror – 40" to *'reflecting surface'*

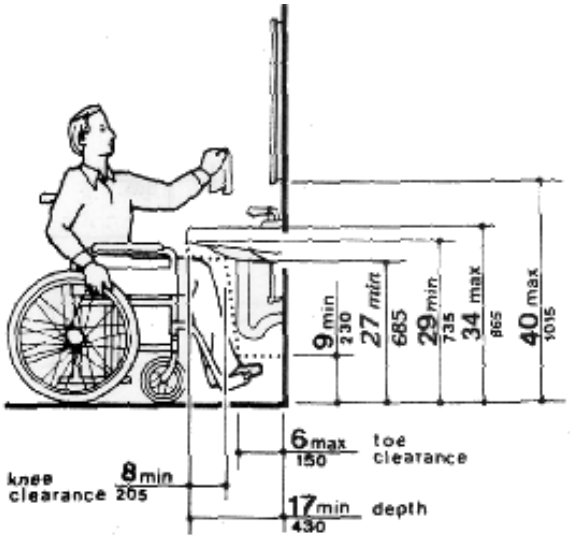

Controls

- In reach ranges
  - 48" max. (ADA)
  - 42" max. (FDOT/MUTCD)
- Maneuvering space (level, 30"x48" min.)

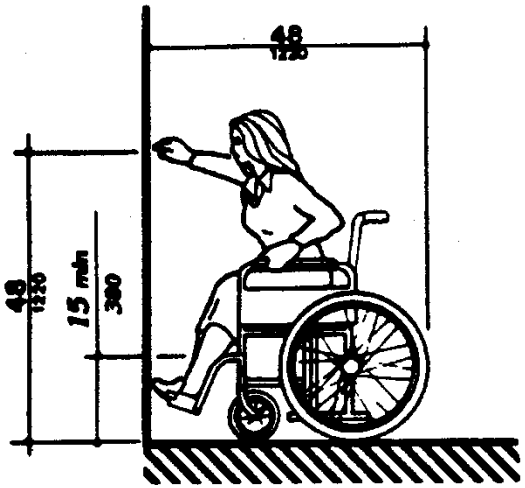

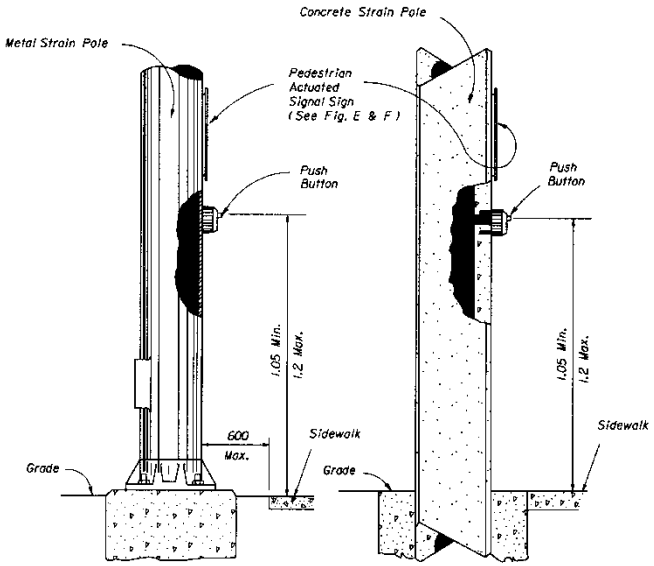

Controls

- Telephones & Vending Machines
- In reach ranges (48" max.)
  - Highest operable part (coin slot?)
- Maneuvering space

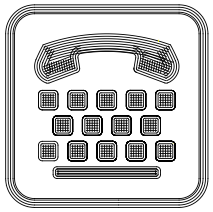

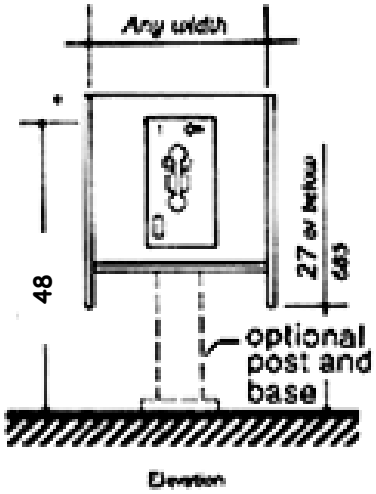

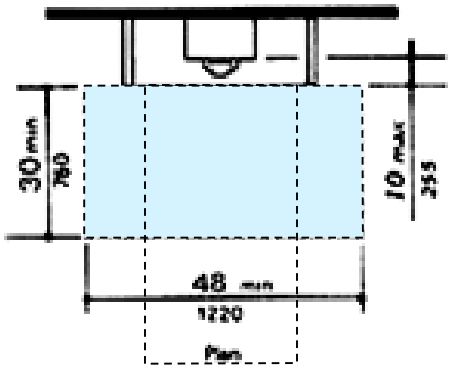

(a)
Side Reach Possible

Storage

- Shelves
  - In reach ranges*
- Closets
  - In reach ranges*
- Coat hooks
  - In offices
  - In toilet stalls

** If higher, provide assistance to reach*

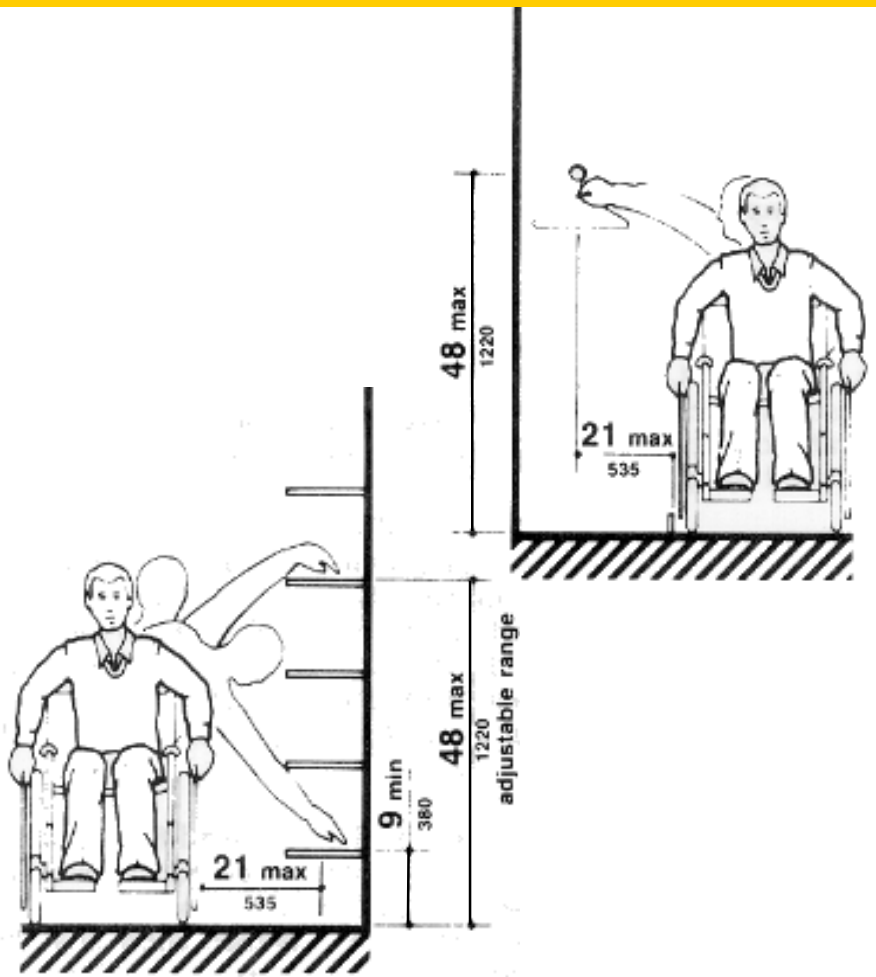

Signage

- Size / Font
- Tactile Sign
  - Raised characters
  - Braille
- Mounting height
  - Old: 60" to centerline of sign
  - New: 48"-60" to base of text

Not for this

For this

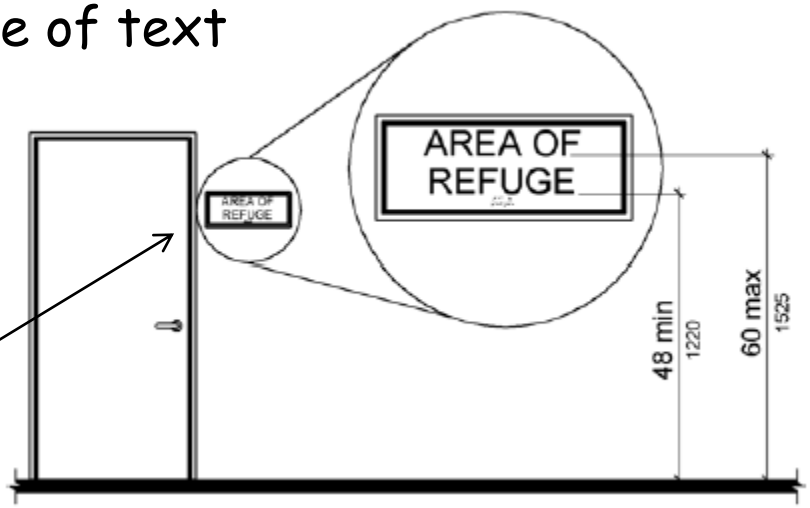

Components of Accessibility 2

- Sidewalks
- Curb cuts
- Parking spaces
- Ramps
- Entrances
- Doors
- Restrooms
- Drinking fountains
- Telephones
- Controls

Sidewalks

- Are Accessible Routes (36" min.)*
- Check Cross-slopes (≤1:48)
- Check Surfaces (firm, stable, slip-resistant)
- Look for Level changes ($\frac{1}{4}$", $\frac{1}{2}$")
- Look for Protruding Objects (27"-80")

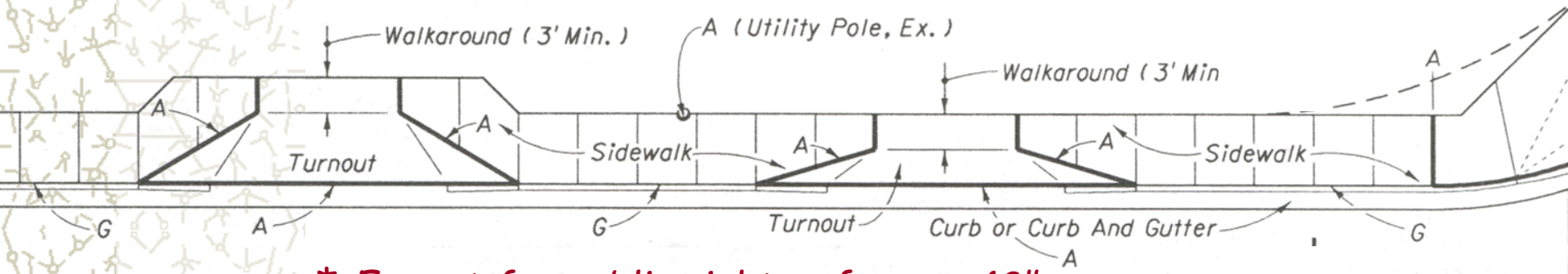

* *Except for public rights-of-way - 48"*

Index 310

Curb Ramps

- Check Slopes (≤1:12)
- Check Cross-slopes (≤1:48)
- Check Detectable Warnings
- Landing at top

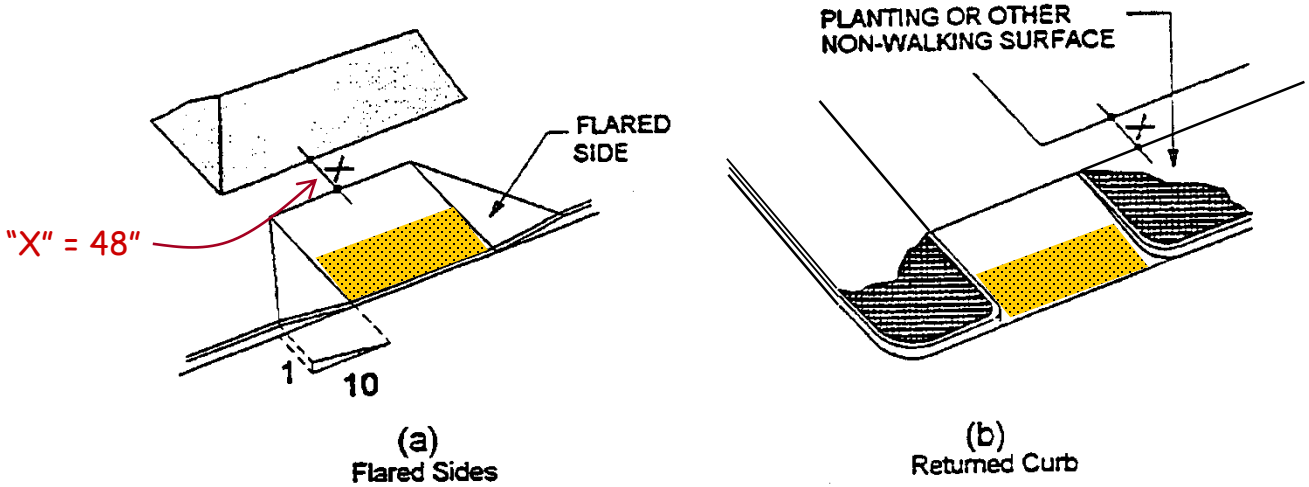

Parking

- Accessible space
  - Width = 12′-0″ min.
- Access aisle
  - Width = 5′-0″ min.
- Curb ramp
  - <u>Outside</u> space & aisle
- Slopes
  - 1:48 max. any direction

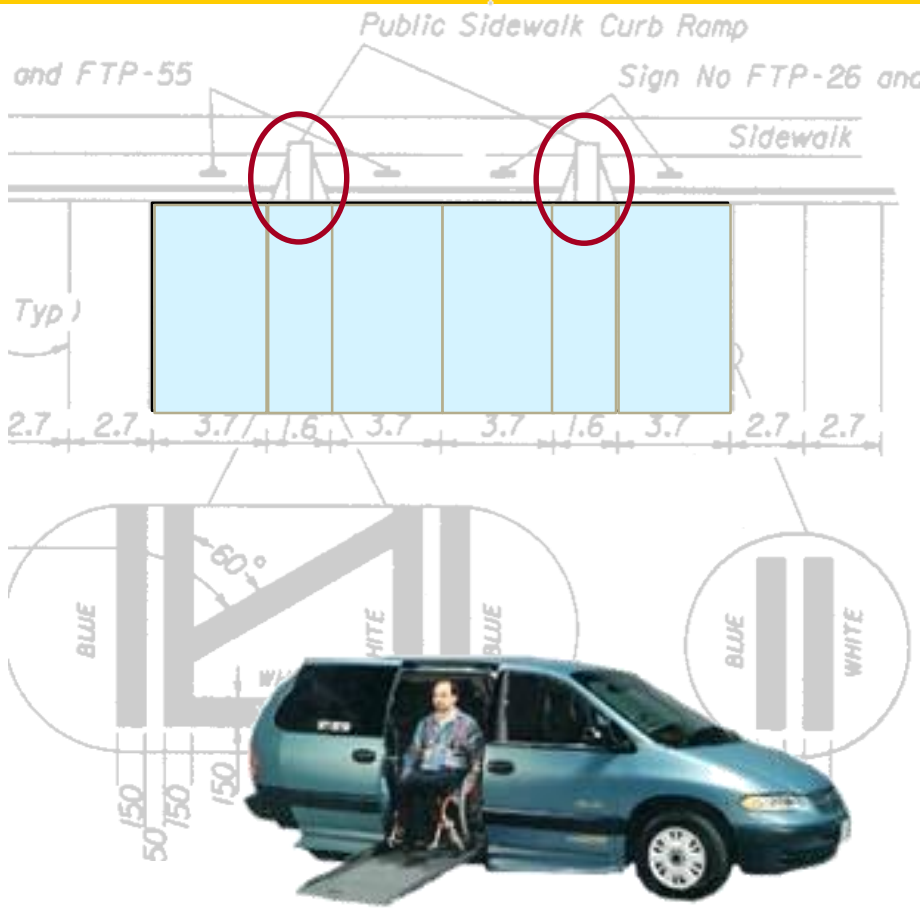

Index 17346

Ramps

- Check for ramp conditions
- Check for cross-slopes (≤1:48, 2%)
- 2" curb or bottom rail

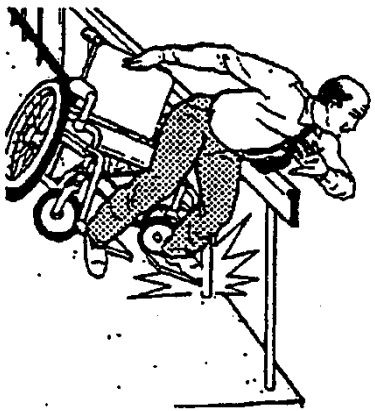

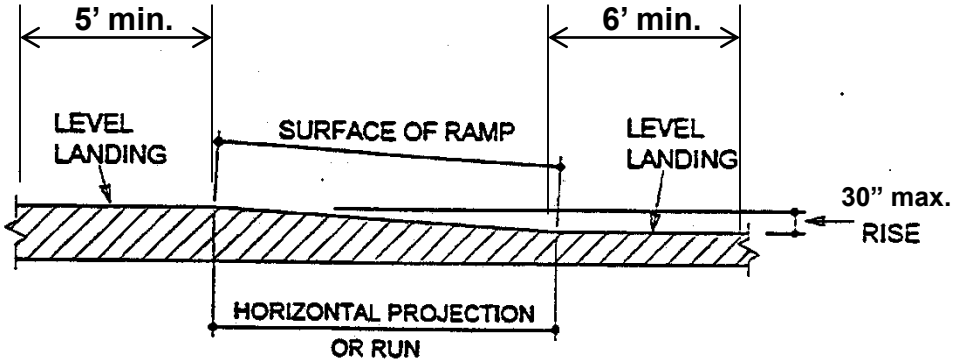

SLOPE	MAXIMUM RISE IN	MAXIMUM RISE MM	MAXIMUM HORIZONTAL PROJECTION FT	MAXIMUM HORIZONTAL PROJECTION M
1:12 TO < 1:16	30	760	30	9
1:16 TO < 1:20	30	760	40	12

Doors

- Check for clear width
  - 32" clear
  - 36" door
- Maneuvering space
  - Pull side
  - Push side

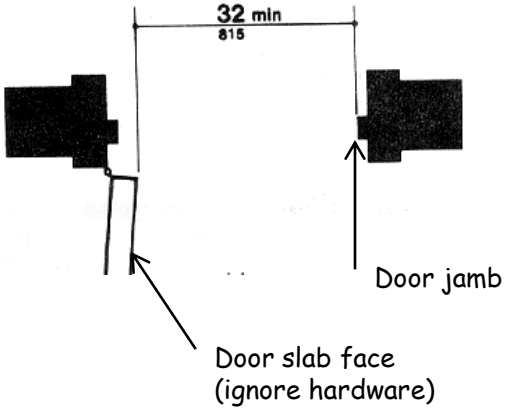

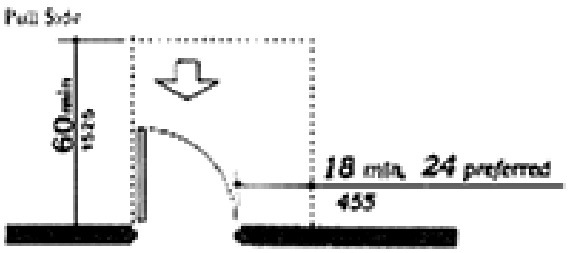

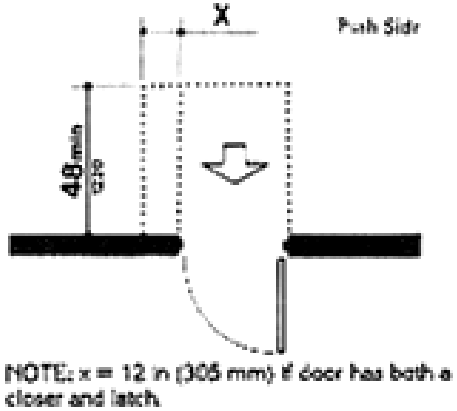

Controls

- Must be within reach ranges
- Check for maneuvering space
- Check for protruding objects

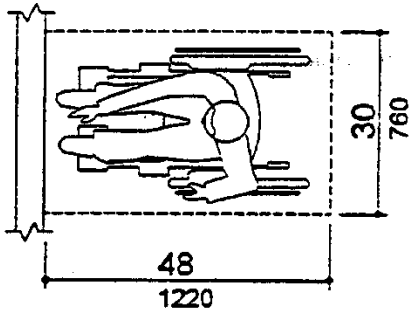

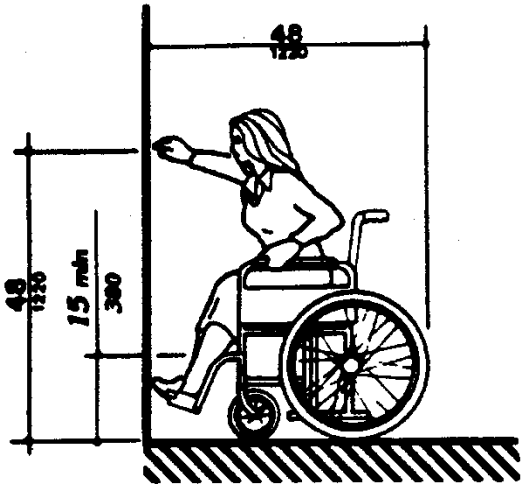

Compliant ? ! ?

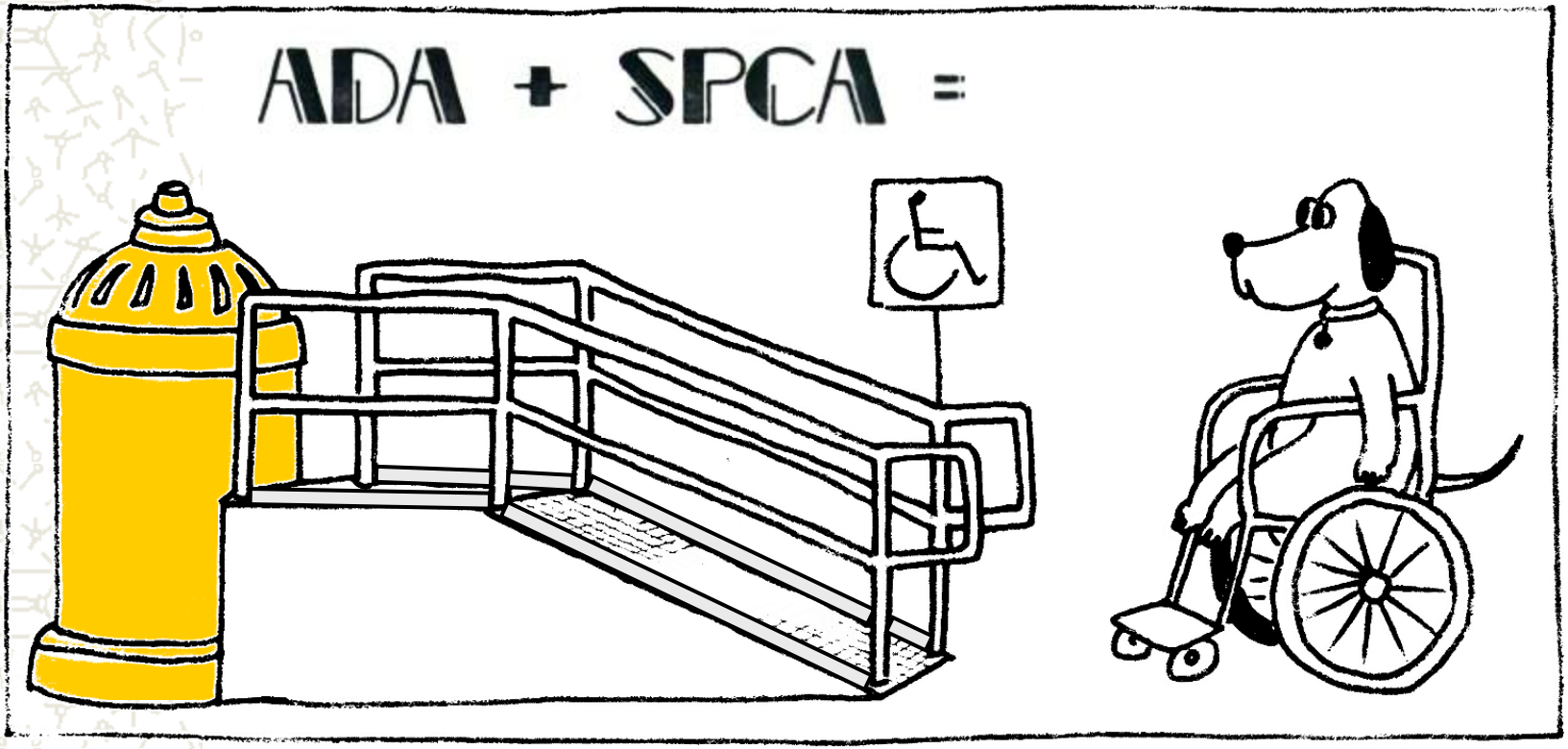

SITE

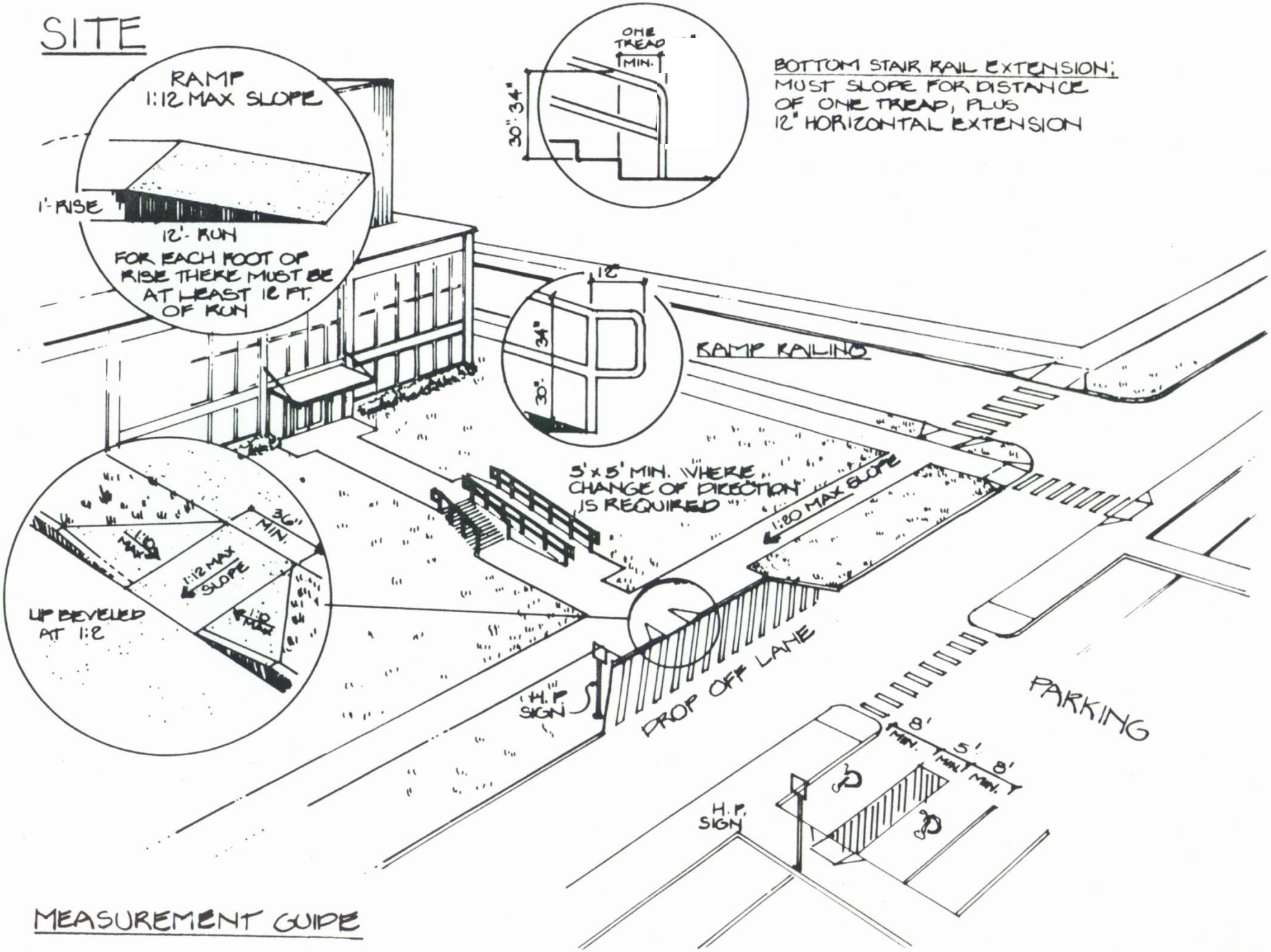

MEASUREMENT GUIDE

ENTRANCE

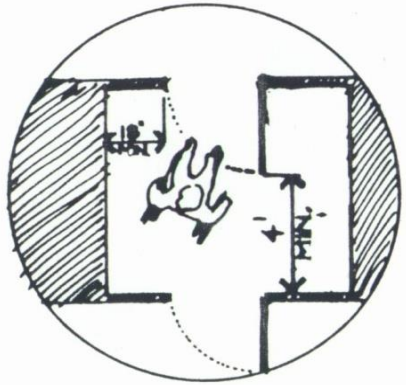

PLAN AT VESTIBULE

60" × 60" MIN. LANDING REQUIRED WHERE CHANGE OF DIRECTION OCCURS

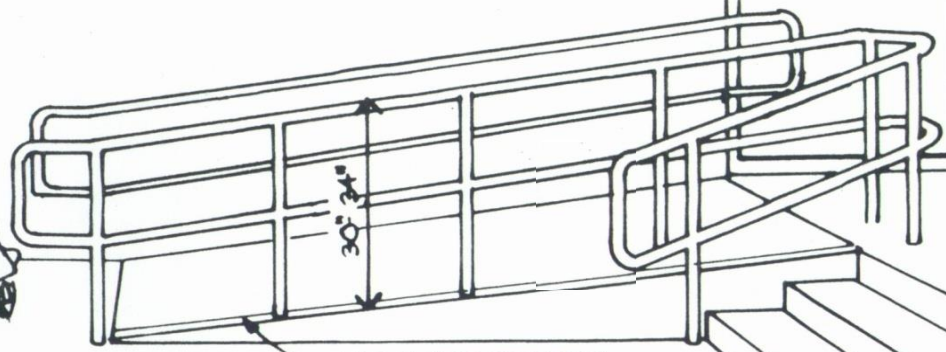

EDGE PROTECTION

RAMP

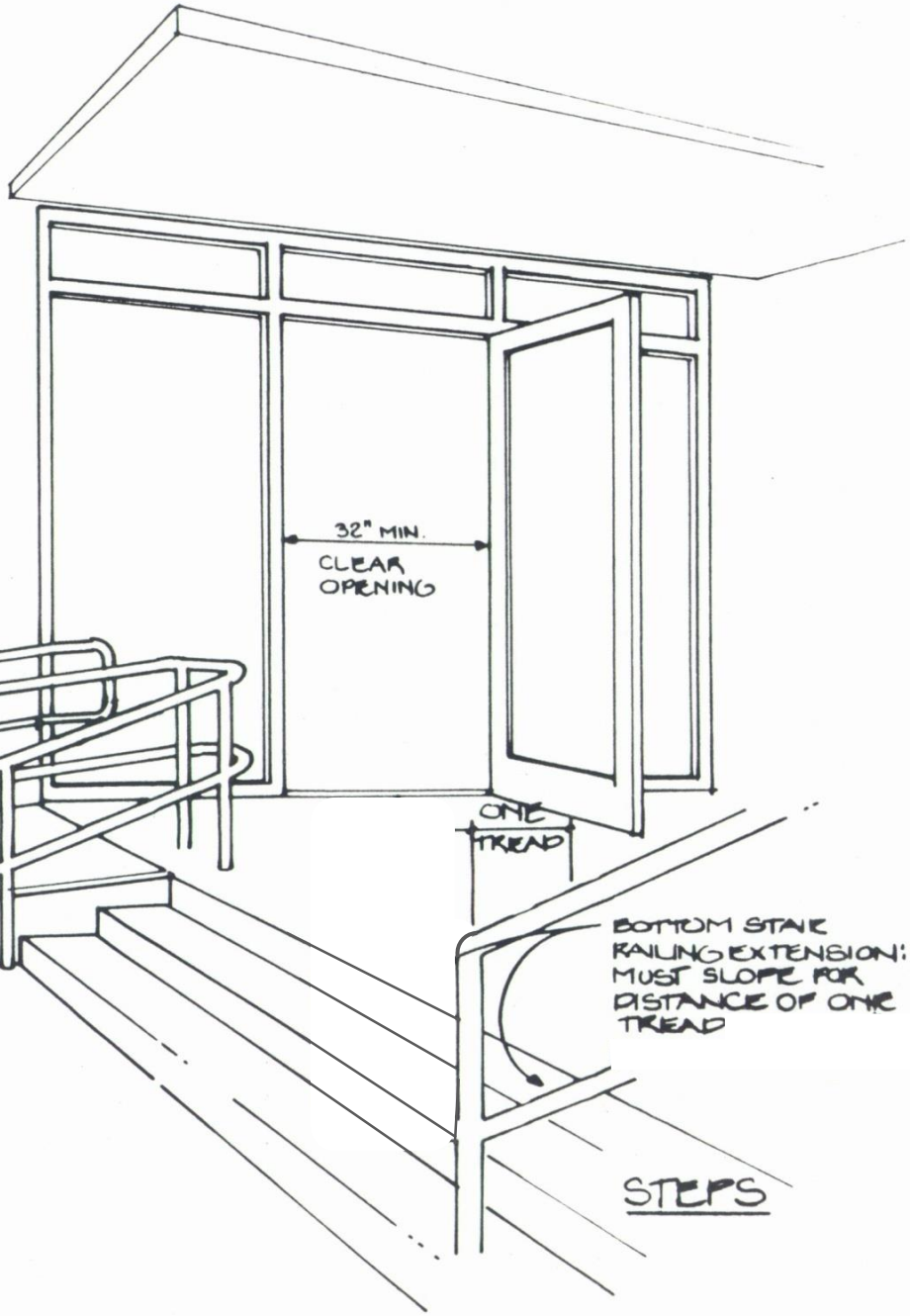

STEPS

RAILING

THRESHOLD

NOSING

STAIR RISE & TREAD

MEASUREMENT GUIDE

BUILDING

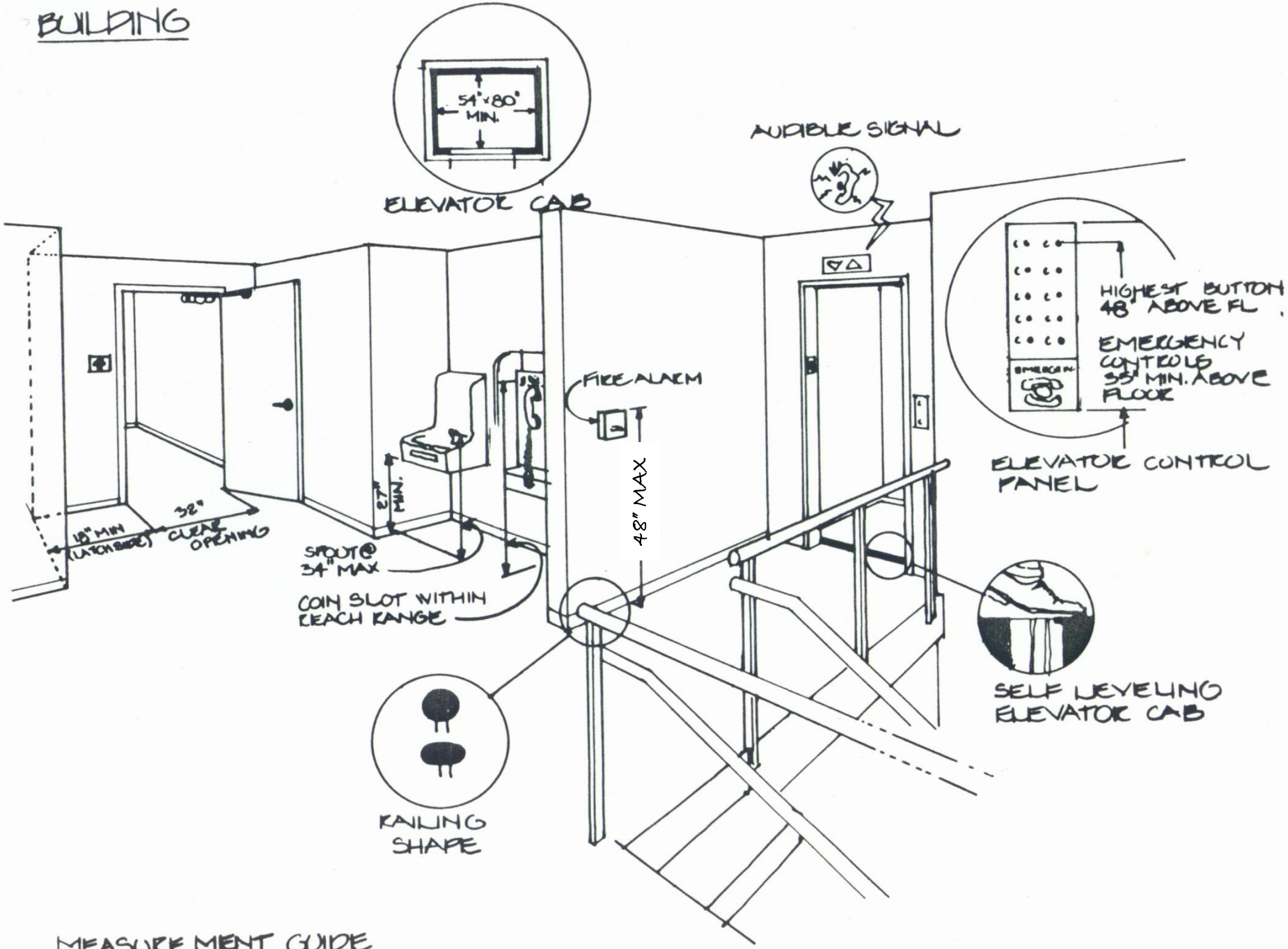

MEASUREMENT GUIDE

Actual Examples

- Random photos
  - Some good
  - Some not-so-good

Walking surfaces & controls

Grating, level changes (pattern)

48″
48″
Walk around at driveway apron

Handrail - Ramp

Handrail - Stair

Entry door – power operated

Standing and seated heights

THIRD FLOOR
42”
60”
Tactile sign
Call buttons

EXIT
SOUTH
STAIRWELL
48" - 60"
Sign
48"
Control

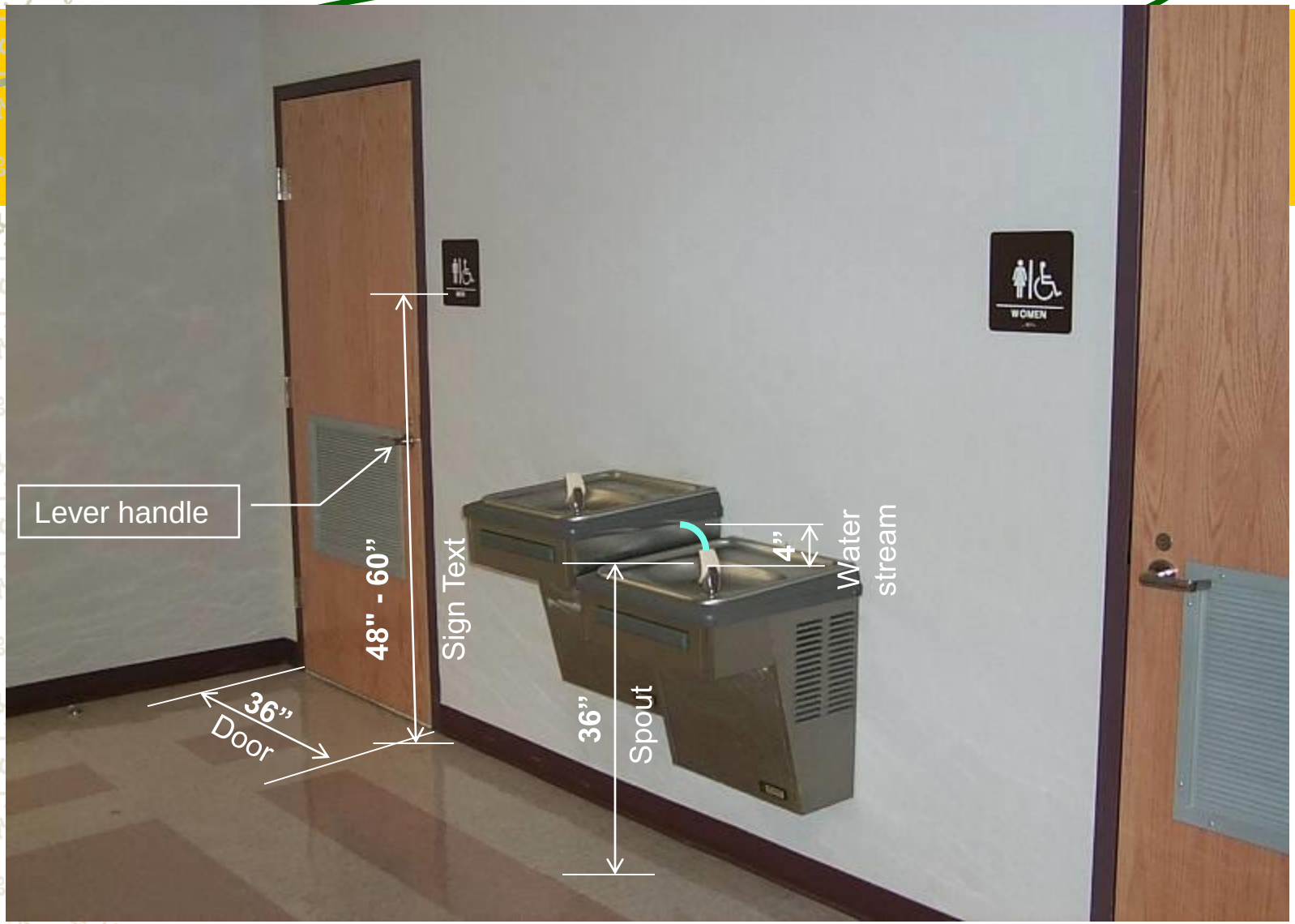
Lever handle
48" - 60"
Sign Text
36"
Door
36"
Spout
4"
Water
stream
WOMEN

48”
Coin slot

Sprint
Volume control

34”
Serving counter
48”
Control

Nice try, but…

Uuuummm…

Not even close

Curb Ramp over here
How do I get there?

Sorry, this won't work

Good for drainage, but…

Poor planning

Watch those surfaces; especially 'temporary' ones

Ramps MAY NOT curve!

That's gotta hurt!

Would *YOU* want to roll through this?

This is okay, right?!?

OUCH!

Awkward!?!

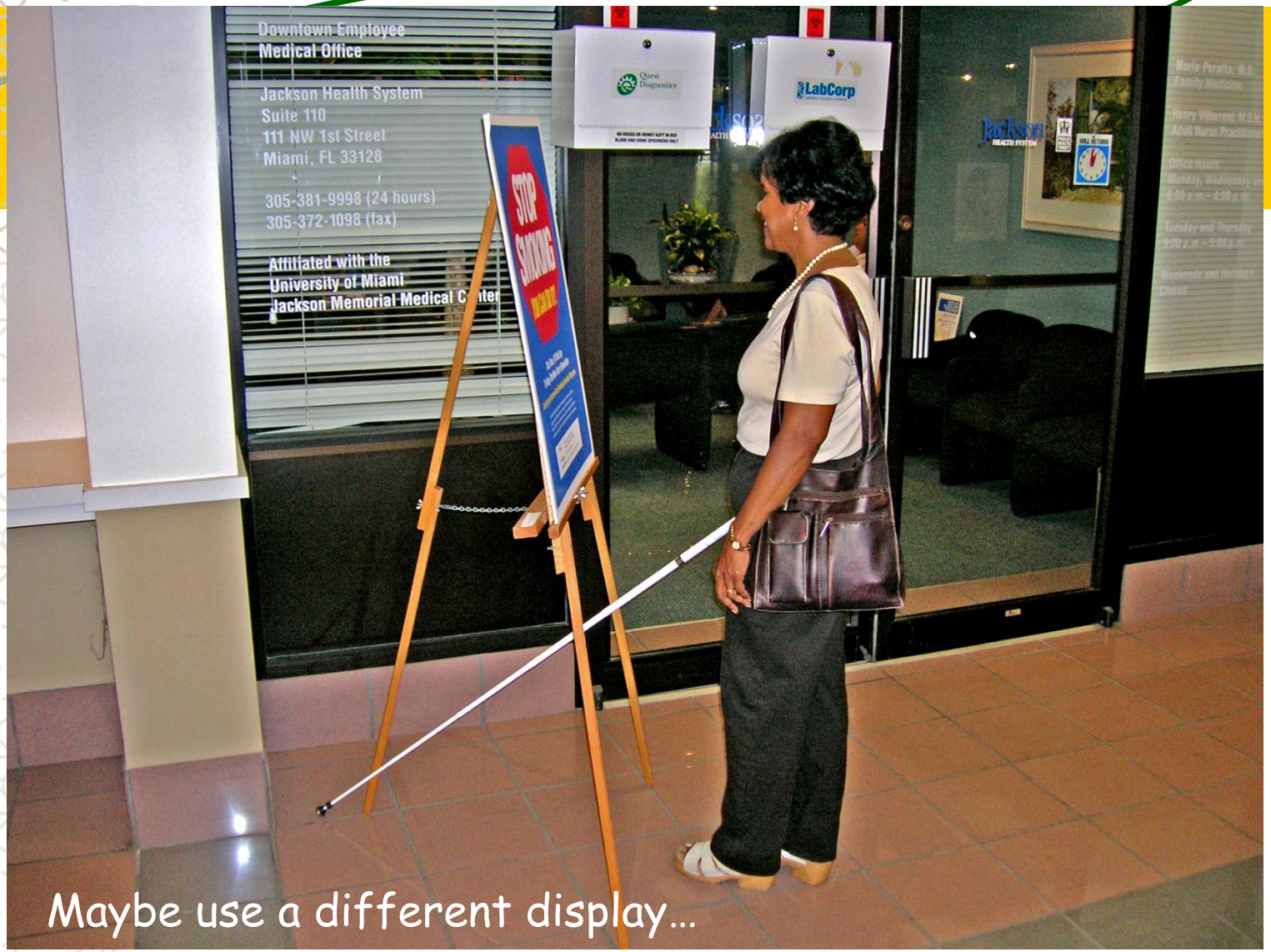

Maybe use a different display…

Good design; poor use…

Very Nice!

Not so nice!

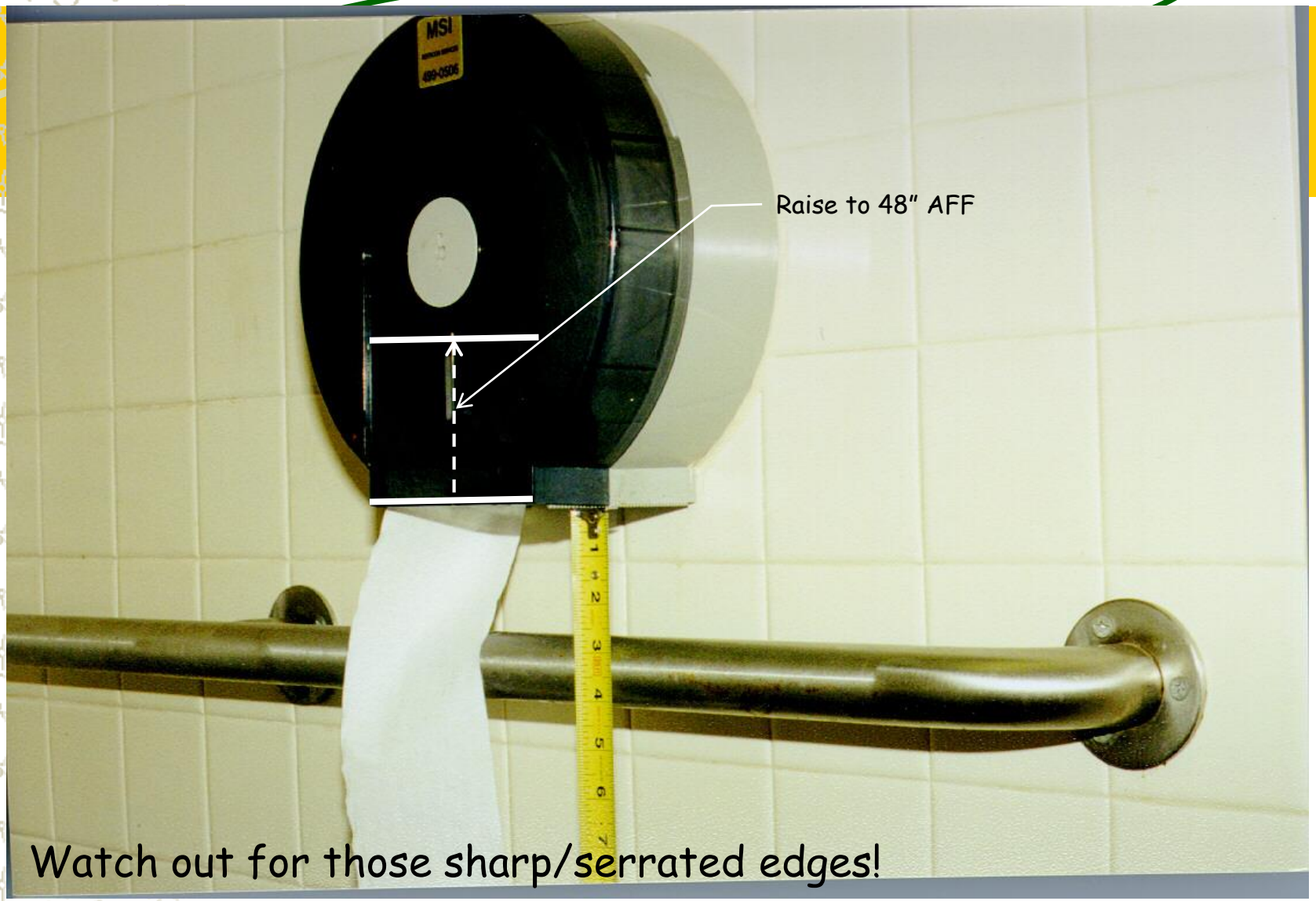

Watch out for those sharp/serrated edges!

27"
Knee Space?!?

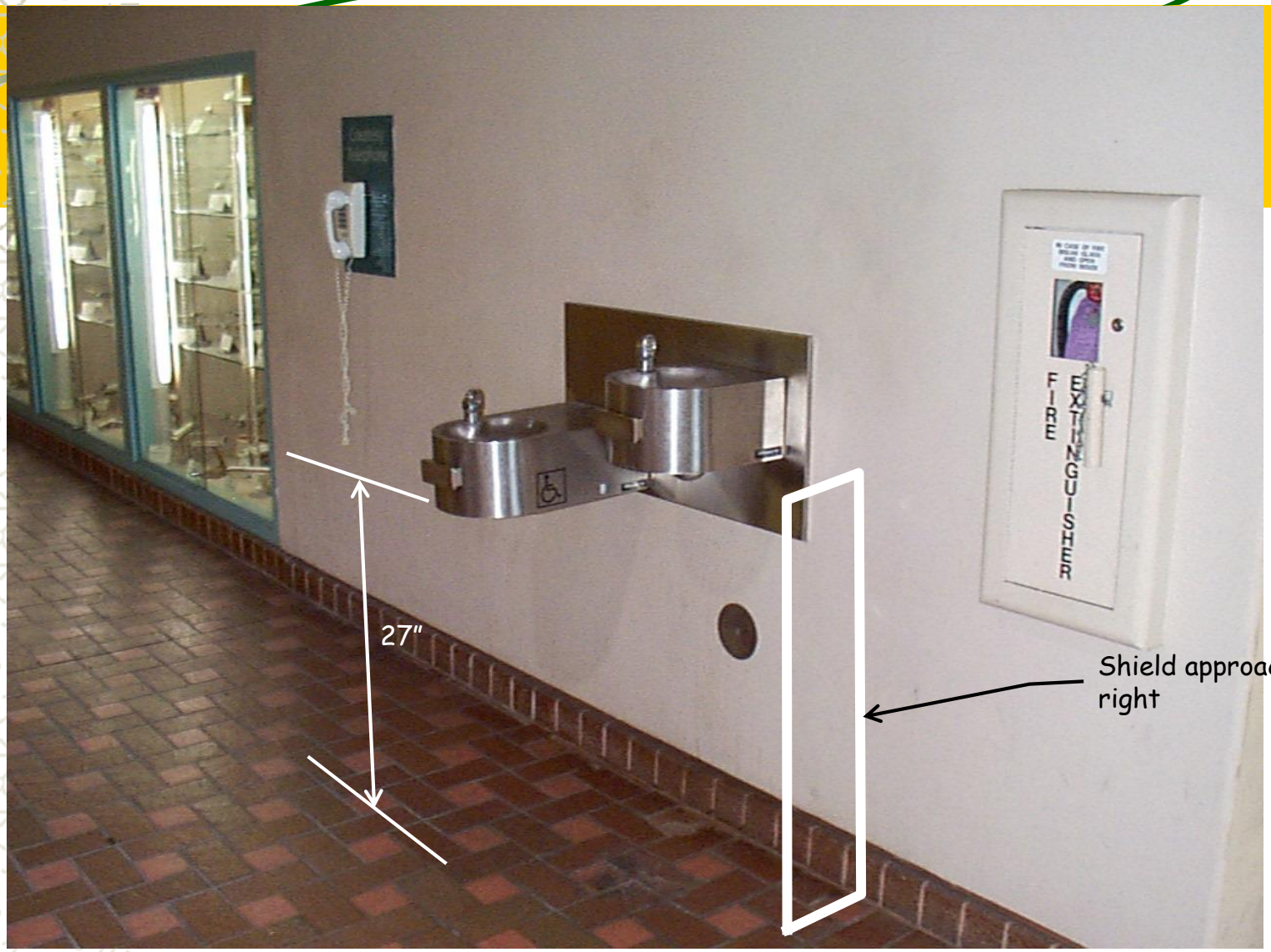

Okay from the left, but not from the right

What's wrong with this picture?

Summary

- What ADA is
- How ADA impacts us
- Features of Accessibility
- Examples

- ***Your work is important for compliance!***

Resources

U.S. Access Board

- Accessibility Guidelines - ADAAG
- www.access-board.gov

U.S. Dept. of Justice - ADA

- Accessibility Standards for Facilities & Sites
- www.ada.gov

U.S. Dept. of Transportation – FHWA

- Accessibility Guidance & Standards for Public Rights of Way
- www.dot.gov/citizen_services/disability/disability.html

Florida Dept. of Transportation - FDOT

- ADA information on Website
- http://www.fdot.gov/designsupport/ADA/default.shtm

Help is available

- City/County/State:
  - YOUR ADA Coordinator
  - FDOT District ADA Coordinator
  - Department of Professional Regulation
- Federal:
  - U.S. Architectural & Transportation Barriers Compliance Board (Access Board)
  - U.S. Department of Justice
  - U.S. DOT

Contact us...

Dean Perkins, Architect
ADA Coordinator

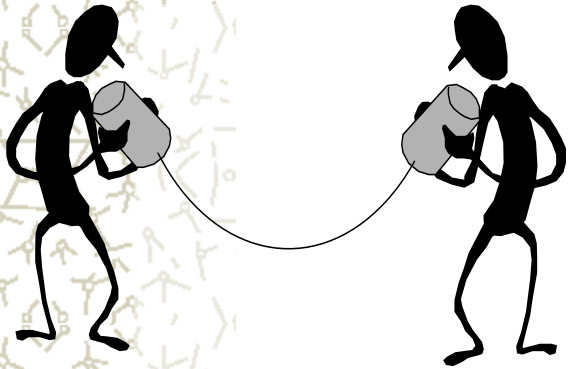

850-414-4359

dean.perkins@dot.state.fl.us

or

YOUR ADA Coordinator

Thank You!

Merci! Todah

Rabbah Arigato!

Dhanya Vaad!

Xie Xie!

Gracias!

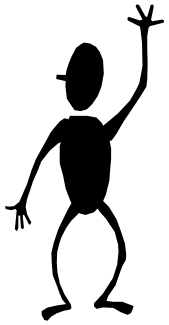

Shokran!

Danke!

Live long and prosper!

The Far Side®

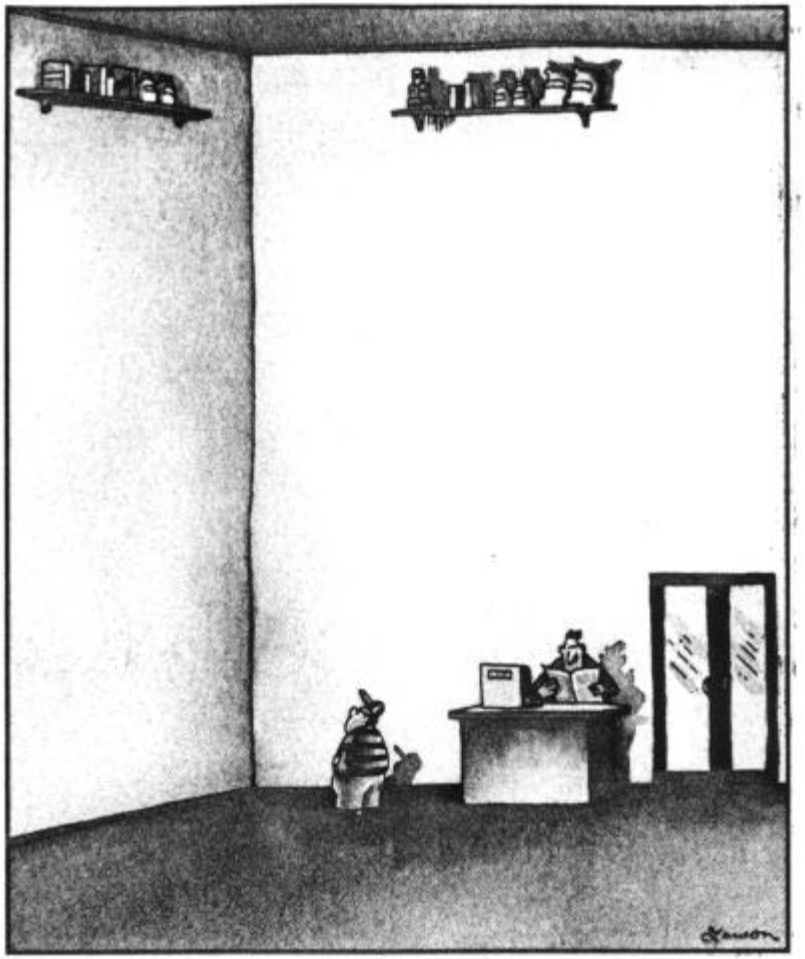

Inconvenience stores

- This is how a person with a disability may see the world . . .
- ***Think about it!***